ILLUSTRATION INDEX

	TITLE	GRID
1993–1995	F ENGINE ASM–3.4L V6 PART 1 CYLINDER BLOCK & INTERNAL PARTS (L32/3.4S)	1–F7
1993–1995	F ENGINE ASM–3.4L V6 PART 2 CYLINDER HEAD & RELATED PARTS (L32/3.4S)	1–F11
1993–1995	F ENGINE ASM–3.4L V6 PART 3 FRONT COVER & COOLING (L32/3.4S)	1–F15
1993–1995	F ENGINE ASM–3.4L V6 PART 4 OIL PUMP, PAN & RELATED PARTS (L32/3.4S)	1–F17
1993–1995	F ENGINE ASM–3.4L V6 PART 5 MANIFOLDS & FUEL RELATED PARTS (L32/3.4S)	1–F21
1995–1997	F ENGINE ASM–3.8L V6 PART 3 FRONT COVER AND COOLING (L36/3.8K)	1–G2
1995–1998	F ENGINE ASM–3.8L V6 PART 5 MANIFOLDS & FUEL RELATED PARTS (L36/3.8K)	1–G5
1995–2002	F ENGINE ASM–3.8L V6 PART 1 CYLINDER BLOCK AND RELATED PARTS (L36/3.8K)	1–G10
1995–2002	F ENGINE ASM–3.8L V6 PART 2 CYLINDER HEAD AND RELATED PARTS (L36/3.8K)	1–G16
1995–2002	F ENGINE ASM–3.8L V6 PART 4 OIL PUMP,PAN AND RELATED PARTS (L36/3.8K)	1–G20
1998–2002	F ENGINE ASM–3.8L V6 PART 3 FRONT COVER AND COOLING (L36/3.8K)	1–G23
1999	F ENGINE ASM–3.8L V6 PART 5 MANIFOLDS & FUEL RELATED PARTS (L36/3.8K)	1–H2
2000–2002	F ENGINE ASM–3.8L V6 PART 5 MANIFOLDS & FUEL RELATED PARTS (L36/3.8K)	1–H7
1993–1995	F ENGINE & TRANSMISSION MOUNTING–V6 (L32/3.4S)	1–H13
1995–1997	F ENGINE & TRANSMISSION MOUNTING–V6 (L36/3.8K)	1–H14
1998–2002	F ENGINE & TRANSMISSION MOUNTING–V6 (L36/3.8K)	1–H16
1993	F COVER/TRANSMISSION CONVERTER (MD8)	1–H18
1994–1995	F COVER/TRANSMISSION CONVERTER (L32,M30)	1–H19
1994–1997	F COVER/TRANSMISSION CONVERTER (LT1,M30)	1–H19
1995–1997	F COVER/TRANSMISSION CONVERTER (L36,M30)	1–H20
1998–2002	F COVER/TRANSMISSION CONVERTER (L36,M30)	1–H21
1998–2002	F COVER/TRANSMISSION CONVERTER (LS1,M30)	1–H22
1993	F CLUTCH (M28,M29)	1–H23
1993–1995	F CLUTCH (M49)	1–H25
1994–1997	F CLUTCH (MM6)	1–H27
1996–2002	F CLUTCH (L36/3.8K)(M49)	1–I2
1998–2002	F CLUTCH (LS1,MM6)	1–I4
1993	F CLUTCH LINKAGE (M28,M29)	1–I6
1993–1995	F CLUTCH LINKAGE (M49)	1–I8
1994–1997	F CLUTCH LINKAGE (MM6)	1–I11
1996–2002	F CLUTCH LINKAGE (L36,M49)	1–I14
1998–2002	F CLUTCH LINKAGE (LS1,MM6)	1–I18

cardiagn.com

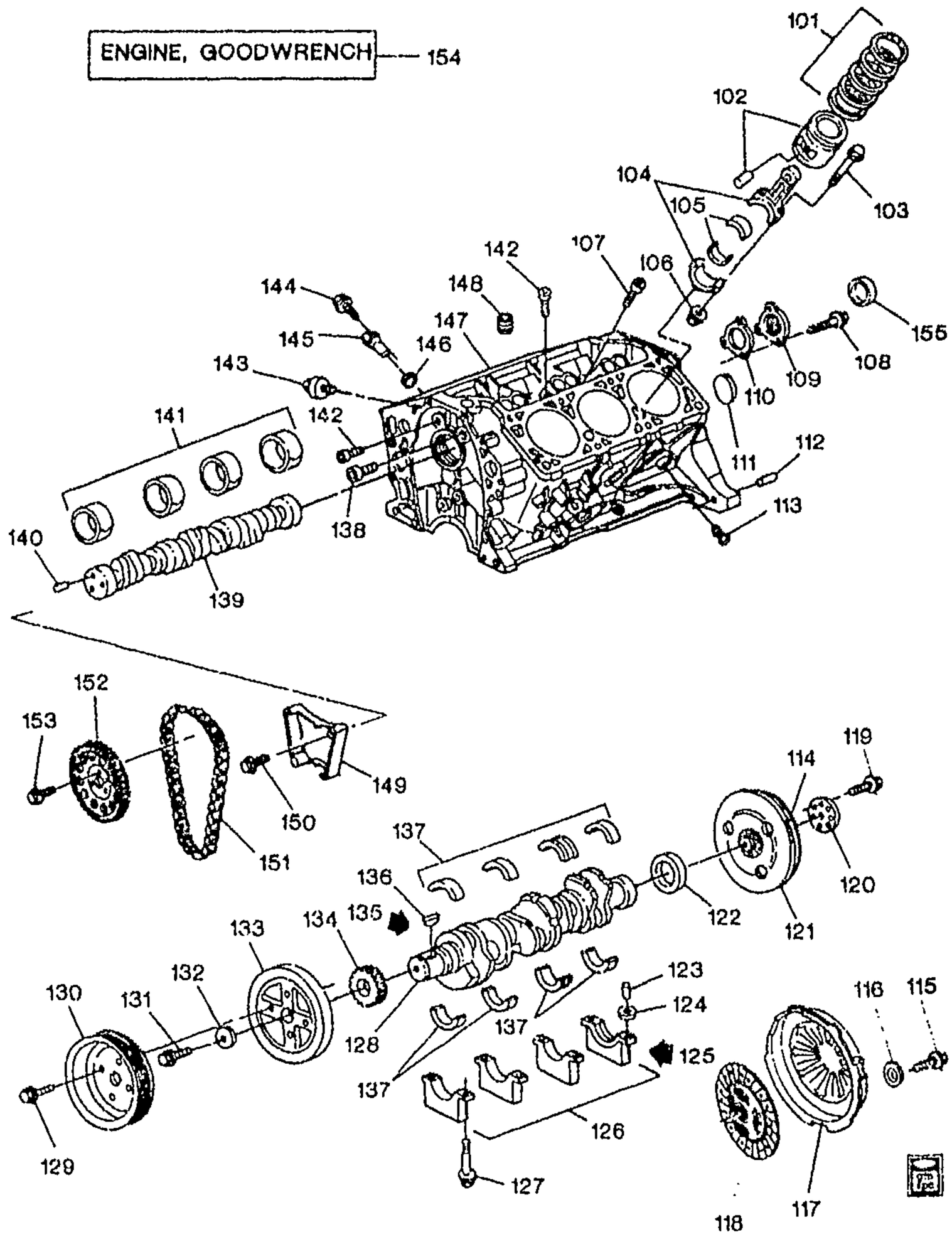

MF00-049

1993-1995 F ENGINE ASM-3.4L V6 PART 1 CYLINDER BLOCK & INTERNAL PARTS (L32/3.4S)

101.	1-E21	0.643	RING KIT, PSTN (STD)	93-95	F (L32)	6	12520260
	1-E21	0.643	RING KIT, PSTN (0.5MM O.S.) ...	93-95	F (L32)	6	12520261
	1-E21	0.643	RING KIT, PSTN (1.0MM OS)	93-95	F (L32)	6	12520262
102.	1-E21	0.629	PISTON, (W/PIN) (STD)	93-95	F (L32)	6	10146858
	1-E21	0.629	PISTON, (W/PIN) (0.5MM O.S.) ..	93-95	F (L32)	6	14097653
	1-E21	0.629	PISTON, (W/PIN) (1.0MM O.S.) ..	93-95	F (L32)	6	14097654

cardiagn.com

103.	1-E20	0.623	BOLT, CONN ROD (ALSO PART OF 104) (M9X1X55.5, 13 THD, STL)	93-95	F (L32)	12	466337
104.	1-E20	0.609	ROD, CONN (INCL 103, 106)	93-95	F (L32)	6	10192567
105.	1-E20	0.616	BEARING KIT, CONN ROD (STD)	93-95	F (L32)	6	12480255
	1-E20	0.616	BEARING KIT, CONN ROD (.026MM U.S.)	93	F (L32)	6	12537647
106.	1-E21	0.626	NUT, CONN ROD (ALSO PART OF 104) (M9X1X9)	93-95	F (L32)	12	361970
107.		8.971	PLUG, 1/8 NPTF (ENG BLK OIL GAL) (AC-DELCO #444613)	93-95		1	444613
108.		8.977	BOLT, M6X1X13, 10 THD, 12.5 OD (CM/SHF RR CVR (SEE ITEM #155 WHEN SERVICED BY PLUG, CM/SHF RR BRG HOLE)	93-94		3	11509699
109.	1-E20	0.553	COVER, CM/SHF RR (SEE ITEM# 155 WHEN SERVICED BY PLUG, CM/SHF RR BRG HOLE)	93-94	F (L32)	1	476544
110.	1-E20	0.553	GASKET, CM/SHF RR CVR (SEE ITEM# 155 WHEN SERVICED BY PLUG, CM/SHF RR BRG HOLE)	93-94	F (L32)	1	10065415
111.	1-E14	0.034	PLUG, ENG BLK CORE HOLE (CUP DIA 34.3MM)	93-95	F (L32)	6	360571
112.	1-E23	0.685	PIN, TRANS LOC (19.5 MM X 18.5 MM)	93	F (L32, MD8)	2	12338076
	1-E23	0.685	PIN, TRANS LOC (19.5 MM X 18.5 MM)	93-95	F (L32, M49)	2	12338076
	1-E23	0.685	PIN, TRANS LOC (19.5 MM X 18.5 MM)	94-95	F (L32, M30)	2	12338076
113.		8.971	PLUG; USED W/ 12346004 SEALER; 1/4-18 NPTF DRY SEAL (ENG BLK COOL DRN HOLE) (AC-DELCO #3889330)	93-95		1	3889330
114.	1-E22	0.673	GEAR, FLYWHL RING (ALSO PART OF 121)	93-95	F (L32)	1	14033090
115.	1-E26	0.862	BOLT, CLU PRESS PLT (M8X1.25X21.6, 19.8+HD, 10.9, PC) (8.900)	93-95	F (L32, M49)	6	24571667
116.		8.931	WASHER-HSL .328X .58X .088 ZO (CLU PRESS PLT)	93-95		6	9439511
117.	1-E25	0.859	PLATE, CLU PRESS (W/CVR)	94-95	F (L32, M49)	1	10235003
	1-E25	0.859	PLATE, CLU PRESS (W/CVR) (IF USE IN PLC OF 10206758, 10235002 DRVN PLT MUST ALSO BE USED)	93	F (L32, M49)	1	10235003
118.	1-E26	0.886	PLATE, CLU DRVN	94-95	F (L32, M49)	1	10235002
	1-E26	0.886	PLATE, CLU DRVN (IF USE IN PLC OF 10206756, 10235003 CLU PRESS PLT MUST ALSO BE USED)	93	F (L32, M49)	1	10235002
119.	1-E22	0.669	BOLT, FLYWHL (HEX, M10X1X23, 15.5 THD, 11.9, PC)	93-95	F (L32, M49)	6	476576
	1-E22	0.669	BOLT, FLYWHL (HEX, M10X1X18.5, 14 THD, 11.9, PC)	93	F (L32, MD8)	6	12338144
	1-E22	0.669	BOLT, FLYWHL (HEX, M10X1X18.5, 14 THD, 11.9, PC)	94-95	F (L32, M30)	6	12338144
120.	1-E22	0.669	RETAINER, FLYWHL	93	F (L32, MD8)	1	477288
	1-E22	0.669	RETAINER, FLYWHL	94-95	F (L32, M30)	1	477288

cardiagn.com

121.	1-E22	0.666	FLYWHEEL, ENG (INCL 114)	93	F (L32, MD8)	1	14097667
	1-E22	0.666	FLYWHEEL, ENG (INCL 114)	93-95	F (L32, M49)	1	14100559
	1-E22	0.666	FLYWHEEL, ENG (INCL 114)	94-95	F (L32, M30)	1	14097667
122.	1-E15	0 137	SEAL KIT, CR/SHF RR OIL (11MM THK) (INCLS INST SHEET & SEALS)	93-95	F (L32)	1	14085829
123.		8.939	PIN, M6X16 STL PL (CR/SHF RR MAIN BRG CAP LOC)	93-95	.....	1	11503504
124.	1-E15	0.137	SEAL, CR/SHF RR MAIN BRG CAP	93-95	F (L32)	1	10191767
125.		8.800	SEALANT-LOCTITE PIPE-W/TEFLON 50CC TUBE (CR SHF RR MAIN BRG CAP)	93-95	.....	AR	12346004
126.		N.S.	CAP, CR/SHF BRG (CSTG)		.....		
127.	1-E14	0.056	BOLT, CR/SHF BRG CAP (M11X1.5X93)	93-95	F (L32)	8	476543
128.	1-E21	0.646	CRANKSHAFT, ...	93-95	F (L32)	1	10146889
129.		8.900	BOLT, HFH M10X1.5X20 9.8 PZOR (CR/SHF PUL)	93-95	.....	1	11508202
130.	1-E21	0.659	PULLEY, CR/SHF	93-95	F (L32)	1	14100594
131.	1-E22	0.662	BOLT, CR/SHF BALR	93-95	F (L32)	1	14102649
132.		8.929	WASHER, SPECIAL 12.4X44.5X8.0 THK PC (CR/SHF BAL)	93-95	.....	1	14001829
133.	1-E21	0.659	DAMPENER, CR/SHF TORSIONAL	93-95	F (L32)	1	10146863
134.	1-E23	0.728	SPROCKET, CR/SHF	93-95	F (L32)	1	477263
135.		8.800	SEALANT, RTV SILICONE RUBR (3.35 OZ TUBE) (CR/SHF BAL KEYWAY)	93-95	.....	AR	12345739
136.	1-E22	0.662	KEY, CR/SHF BALR (LGTH-36.7MM, WIDTH-4.77MM) (8.960)	93-95	F (L32)	1	14089209
137.	1-E15	0.096	BEARING KIT, CR/SHF (#1, #4 STD)	93-95	F (L32)	2	12480252
	1-E15	0.096	BEARING KIT, CR/SHF (#2 STD) (INCLS 2 NON-FLANGED BRGS)	93-95	F (L32)	1	12480253
	1-E15	0.096	BEARING KIT, CR/SHF (#3 STD) (INCLS 1 FLANGE & 1 REGULAR BRG)	93-95	F (L32, M30)	1	12480254
	1-E15	0.096	BEARING KIT, CR/SHF (POS #3, STD) (INCLS 2 NON-FLANGED BRGS)	93-94	F (L32, M27)	1	12480253
	1-E15	0.096	BEARING KIT, CR/SHF (POS #3, STD) (CONTAINS 2 FLANGED BRGS)	93-94	F (L32, M27)	1	12537077
	1-E15	0.096	BEARING KIT, CR/SHF (POS #3, STD) (INCLS 2 NON-FLANGED BRGS)	94-95	F (L32, M49)	1	12480253
	1-E15	0.096	BEARING KIT, CR/SHF (POS #3, STD) (CONTAINS 2 FLANGED BRGS)	94-95	F (L32, M49)	1	12537077
138.	1-L28	1.531	PLUG, ENG BLK OIL GAL (AUTO DRAIN, INT SQ, 3/8-18X.42 PEOR STL) (8.971)	93-95	F (L32)	2	14090911
139.	1-E20	0.519	CAMSHAFT, ENG (INCL 140)	93-95	F (L32)	1	10166324

cardiagn.com

140.		8.939	**PIN**, M6X16 STL PL (ALSO PART OF 139) (CM/SHF SPKT LOC) ...	93-95	.....	1	11503504
141.	1-E20	0.539	**BEARING**, CM/SHF (#1)	93-95	F (L32)	1	12507945
	1-E20	0.539	**BEARING**, CM/SHF (#2, 3)	93-95	F (L32)	2	12507946
	1-E20	0.539	**BEARING**, CM/SHF (#4)	93-95	F (L32)	1	12507947
142.	1-L28	1.531	**PLUG**, ENG BLK OIL GAL (INT SOC, 1/4-18 THD, .41, W/THD SEALER) (8.970)	93-95	F (L32)	4	14102589
	1-L28	1.531	**PLUG**, ENG BLK OIL GAL (CTR TOP) (HEX SOC 1/8-27, 1/8 HEADLESS, STL) (3.665) (AC-DELCO #10040001)	93	F (L32)	2	10040001
143.	1-M12	2.383	**SENSOR**, KNOCK (AC-DELCO #213-266)	93-95	F (L32)	1	10456207
144.	1-M12	2.383	**BOLT**, CR/SHF POSN SEN (M6X1X20, 19THD, 14.2OD) (8.900) (AC-DELCO #11517518)	93-95	F (L32)	1	11517518
145.	1-M12	2.383	**SENSOR**, CR/SHF POSN (INCL 146) (7X IGN TIMING) (AC-DELCO #213-150)	93-95	F (L32)	1	10456108
146.	1-M12	2.383	**SEAL**, CR/SHF POSN SEN (O RING) (ALSO PART OF 145) (2.170) (AC-DELCO #1989866) .	93-95	F (L32)	1	1989866
147.		N.S.	**BLOCK**, ENG (SERVICED BY GOODWRENCH ENGINE)		.....		
148.		8.971	**PLUG**, SQ SOCKET, 1/4-18 NPTF, .46 THD, PL, W/SEALER (ENG OIL PRESS GA SEN OR IND SW HOLE)	93-95	.....	1	14081701
149.	1-E23	0.724	**DAMPENER**, TMG CHAIN	93	F (L32)	1	477264
	1-E23	0.724	**DAMPENER**, TMG CHAIN	94-95	F (L32)	1	10189283
150.		8.900	**BOLT-HEX**, M8X1.25X21.5, 17 OD, 18.5 THD, GM500-M (9.81), GM6173, MACH (TMG CHAIN DPNR) (AC-DELCO #8656392) .	93-95	.....	2	8656392
151.	1-E23	0.724	**CHAIN**, CM/SHF TMG	93-95	F (L32)	1	14102670
152.	1-E23	0.736	**SPROCKET**, CM/SHF	93-95	F (L32)	1	14025558
153.	1-E24	0.738	**BOLT**, CM/SHF SPKT (HEX HD M8X1.25X23)	93-95	F (L32)	3	477280
154.	1-E12	0.000 A	**ENGINE**, GASOLINE (GOODWRENCH) (NEW) (REFER TO NOTE #10 ION CATLG TEXT)	93-95	F (L32)	1	12537104
155.	1-E20	0.553	**PLUG**, CM/SHF RR BRG HOLE (SEE ITEMS 108, 109, 110 WHEN SERVICED BY COVER, CM/SHF RR) (8.970)	94-95	F (L32)	1	10241154

RPO DEFINITIONS

L32 – ENGINE,3.4L,V6,(3.4S),SFI,OHV
MD8 – TRANSMISSION,AUTOMATIC 4-SPEED(THM700R4/4L60)
M27 – TRANSMISSION,MANUAL 5-SPEED
M30 – TRANSMISSION,AUTOMATIC 4 SPEED,4L60E,ELECTRONIC
M49 – TRANSMISSION MAN 5 SPD, BORG WARNER, 77MM, 3.75 1ST, .76 5TH, O/D

cardiagn.com

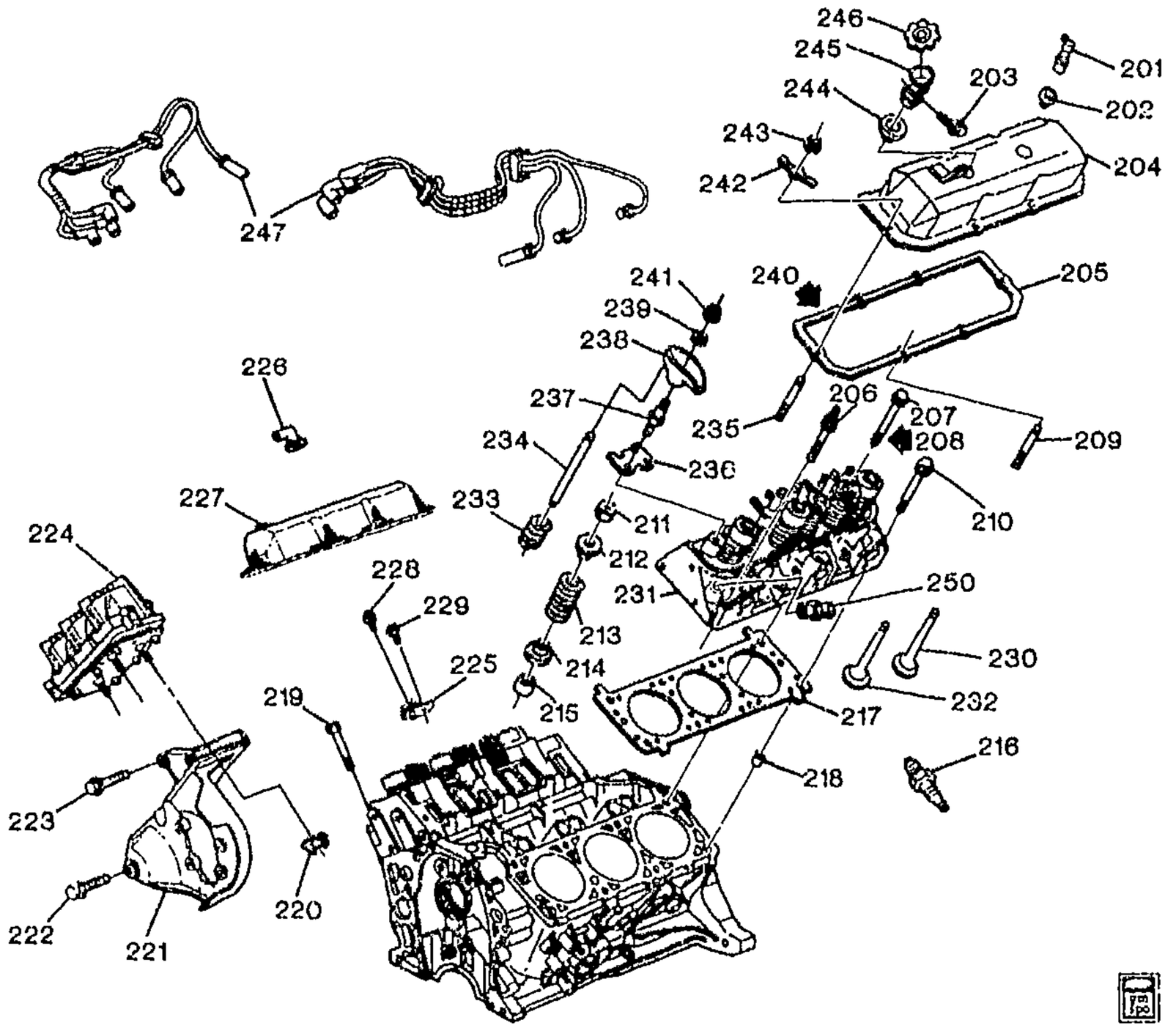

MF00-050

1993-1995 F ENGINE ASM-3.4L V6 PART 2 CYLINDER HEAD & RELATED PARTS (L32/3.4S)

201.	1-M4	1.745	VALVE, PCV (AC-DELCO #CV789C)	93-95	F (L32)	1	8995284
202.	1-M4	1.745	GROMMET, PCV VLV	93-95	F (L32)	1	14091870
203.		8.977	SCREW, HWH TAP M6.3X1.81X13 13 OD PZOR (OIL FIL TUBE SUPT)	93-95		1	12336139
204.	1-E18	0.386	COVER, VLV RKR ARM	93-95	F (L32)	LH	10191718
205.	1-E19	0.423	GASKET, VLV RKR ARM CVR (*KIT1)	93-95	F (L32)	2	10048606
206.	1-E17	0.293	STUD, CYL HD (USE 09985490 SEALER)	93-95	F (L32)	1	14097629
207.	1-E17	0.293	BOLT, CYL HD (M11X1.5X93) (0.056)	93-95	F (L32)	8	476543
208.		8.800	SEALANT-LOCTITE PIPE-W/TEFLON 50CC TUBE	93-95		AR	12346004
209.	1-E13	0.413	STUD, VLV RKR ARM CVR (M6X1X13/M6X1X21.5, TL 40.5, TORX DR, DOG PT) (M6X1X13/M6X1X21.5)	93-95	F (L32)	11	14092906

cardiagn.com

210.	1-E17	0.293	BOLT, CYL HD (M11X1.5X68)	93-95	F (L32)	8	476572
211.	1-E18	0.310	KEY, VLV STEM	93-95	F (L32)	24	24503856
212.	1-E18	0.309	CAP, VLV SPR	93-95	F (L32)	12	14004099
213.	1-E17	0.303	SPRING, VLV (W/DAMPER)	93-95	F (L32)	12	10207475
214.	1-E18	0.308	SHIELD, VLV STEM OIL	93-95	F (L32)	6	10048657
215.	1-E18	0.308	SEAL, VLV STEM OIL (O-RING TYPE) (*KIT1)	93-95	F (L32)	12	10214034
	1-E18	0.308	SEAL, INT VLV STEM OIL (STD AND .003 O.S.) (W/RET) (*KIT1) .	93-95	F (L32)	6	460483
	1-E18	0.308	SEAL, INT VLV STEM OIL (W/RET) (.015 O.S.) (*KIT1)	93-94	F (L32)	6	14037715
	1-E18	0.308	SEAL, INT VLV STEM OIL (W/RET) (.030 O.S.) (*KIT1)	93-94	F (L32)	6	14037716
216.	1-M11	2.270	SPARK PLUG, (AC-DELCO #R43TSK)	93-95	F (L32)	6	5614168
	1-M11	2.270	SPARK PLUG, (AC-DELCO #41-803)	93-95	FP (L32)	1	88901009
217.	1-E16	0.289	GASKET, CYL HD (*KIT1)	93-95	F (L32)	2	10219641
218.	1-E17	0.293	PIN, CYL HD LOC (DOWEL) (SPLIT, 15X12.5, CHAM, STL)	93-95	F (L32)	4	14024244
219.	1-E17	0.293	BOLT, CYL HD (M11X1.5X71)	93-95	F (L32)	1	10065500
220.		8.917	NUT, HEX FLGD PREV TORQ M6X1 9 CAD (ELEK ICM)	93	F (L32)	3	11503750
		8.917	NUT, HFH 6X1X7 SELF LK 14.2-OD (9) 7111M ALL MET PREV TORQ (ELEK ICM)	94-95	F (L32)	3	11516075
221.	1-M7	2.183	BRACKET, IGN COIL & P/S PUMP (SEE "STEERING PUMP MOUNTING" ILLUSTRATION IN GROUP 6.000 FOR DETAILED VIEW.)	93-95	F (L32)	1	10115882
	1-N27	6.606	BRACKET, IGN COIL & P/S PUMP (SEE "STEERING PUMP MOUNTING" ILLUSTRATION IN GROUP 6.000 FOR DETAILED VIEW.) (2.183)	93-95	F (L32)	1	10115882
222.		8.900	BOLT, HFH, M10X1.5X40, 26 THD, 10.9, POR (IGN COIL & P/S PUMP BRKT)	93-95	.....	3	14050422
223.		8.900	BOLT, HFH, M10X1.5X40, 26 THD, 10.9, POR (IGN COIL & P/S PUMP BRKT)	93-95	.....	3	14050422
224.	1-M12	2.383	MODULE, ELEK IGN CONT (W/O COIL) (SEE "COIL & MODULE/IGNITION" ILLUSTRATION IN GRP. 2.000 FOR DETAILED VIEW.) (ON ENGINE) (INCLS SEALS) (AC-DELCO #D1998A)	93-95	F (L32)	1	10489422
225.	1-M11	2.277	SUPPORT, GEN RR (LOWER) ...	93-95	F (L32)	1	10244472
226.	1-M4	1.745	GROMMET, PCV TUBE (15/32I.D. X 25/32O.D)	93-95	F (L32)	1	14078872
227.	1-E18	0.386	COVER, VLV RKR ARM	93-95	F (L32)	RH	10154738
228.	1-M11	2.277	BOLT, GEN SUPT BR	93-95	F (L32)	1	14097631
229.		8.900	BOLT, HFH M10X1.5X20 9.8 PZOR (GEN BR)	93-95	.....	1	11508202
230.	1-E17	0.296	VALVE, INT (.089MM O.S.)	93-95	F (L32)	6	14031394

cardiagn.com

	1-E17	0.296	VALVE, INT (.394MM O.S.)	93-95	F (L32)	6	14031395
	1-E17	0.296	VALVE, INT (.775MM O.S.)	93-95	F (L32)	6	14031396
	1-E17	0.296	VALVE, INT (STD)	93-95	F (L32)	6	14031328
231.	1-E16	0.269	HEAD, CYL	93-95	F (L32)	2	14054084
232.	1-E17	0.297	VALVE, EXH (STD)	93-95	F (L32)	6	14031332
	1-E17	0.297	VALVE, EXH (.089MM O.S.)	93-95	F (L32)	6	14031397
	1-E17	0.297	VALVE, EXH (.394MM O.S.)	93-95	F (L32)	6	14031398
	1-E17	0.297	VALVE, EXH (.775MM O.S.)	93-95	F (L32)	6	14031399
233.	1-E19	0.459	LIFTER, VLV (HYD) (.010" O.S.) (AC-DELCO #HL111)	93-95	F (L32)	12	5234390
	1-E19	0.459	LIFTER, VLV (HYD) (STD) (AC-DELCO #HL81A)	93-95	F (L32)	12	5234212
234.	1-E19	0.426	ROD, VLV PUSH (INCLS INSERTS)	93-95	F (L32)	12	476525
235.	1-E18	0.413	STUD, VLV RKR ARM CVR (M6X1X9/M6X1X10.5, 35 NECK TO TORX DR)	93-95	F (L32)	1	14091881
236.	1-E19	0.439	GUIDE, VLV LFTR PUSH ROD	93-95	F (L32)	6	476531
237.	1-E19	0.429	STUD, VLV RKR ARM BALL (M10X1.5X9.9/M10X1X18) (M10X1.5X9.9/M10X1X18)	93-95	F (L32)	12	476530
238.	1-E18	0.333	ARM KIT, VLV RKR (W/BALL) (INCL 239, 241) (INCLS ARM, BALL & NUT)	93-95	F (L32)	12	14002446
239.		N.S.	BALL, VLV RKR ARM (PART OF 238)				
240.		8.800	SEALANT, RTV SILICONE RUBR (3.35 OZ TUBE) (VLV RKR ARM CVR)	93-95		AR	12345739
241.	1-E19	0.429	NUT, VLV RKR ARM (ALSO PART OF 238) (HEX PREV TORQ, ALL MET, 10X1.0X11.2, 301M, CD)	93-95	F (L32)	12	477212
242.	1-E18	0.413	REINFORCEMENT, VLV RKR ARM CVR	93-95	F (L32)	12	14090536
243.		8.917	NUT, HFH M6X1X6.5 ZOR 9 (VLV RKR ARM CVR)	93-95		12	3530297
244.	1-M4	1.745	GROMMET, OIL FIL TUBE (ID-24.13, OD-45.04, FITS HOLE-30.6, WIDTH-21.8 (MM))	93-95	F (L32)	1	10108402
245.	1-M4	1.745	TUBE, OIL FIL	93-95	F (L32)	1	10154740
246.	1-M4	1.758	CAP, OIL FIL (AC-DELCO #FC169)	93-95	F (L32)	1	10229164
247.	1-M8	2.239	WIRE KIT, SPLG (AC-DELCO #726C)	93-95	F (L32)	1	12096409
	1-M8	2.240	WIRE, SPLG #1 CYL (28" STYLE DD) (AC-DELCO #324J)	93-95	F (L32)	1	12072150
	1-M8	2.240	WIRE, SPLG #2 CYL (18" STYLE DD) (AC-DELCO #327C)	93-95	F (L32)	1	12073902
	1-M8	2.240	WIRE, SPLG #2 CYL (STYLE DD-L, 28" LG) (AC-DELCO #324J)	93-95	F (L32)	1	12072150
	1-M8	2.240	WIRE, SPLG #3 CYL (32" STYLE EE) (AC-DELCO #327J)	93-95	F (L32)	1	12073908
	1-M8	2.240	WIRE, SPLG #4 CYL (20" LG, STYLE RR) (AC- DELCO #327D)	93-95	F (L32)	1	12073903
	1-M8	2.240	WIRE, SPLG #5 CYL (36" LG, STYLE EE) (AC-DELCO #327K)	93-95	F (L32)	1	12073909

cardiagn.com

	1-M8	2.240	WIRE, SPLG #6 CYL (22" LG, STYLE RR) (AC-DELCO #327E) .	93-95	F (L32)	1	12073904
250.	1-L24	1.150	SENSOR, ENG COOL T/GA (AT CYLINDER HEAD FOR TEMP GAUGE) (USE W/LOCTITE 503, 504, 517 ON SECOND TO SIXTH THREAD ONLY) (3/8-18 THD) (2 TERM, CAN BE USED AS 1 TERM CONN) (AC-DELCO #213-77)	93-95	F (L32)	1	25037332

SERVICE KITS

1.	1-E16	0.289	GASKET KIT, CYL HD (INCL 205, 215, 217) (KIT ALSO INCLUDES GASKETS AND SEALS FOR MANIFOLDS, GASKETS, EGR VLV PIPE AND ENG COOL THERMOSTAT)	93-95	F (L32)	1	12520757

RPO DEFINITIONS
L32 - ENGINE,3.4L,V6,(3.4S),SFI,OHV

cardiagn.com

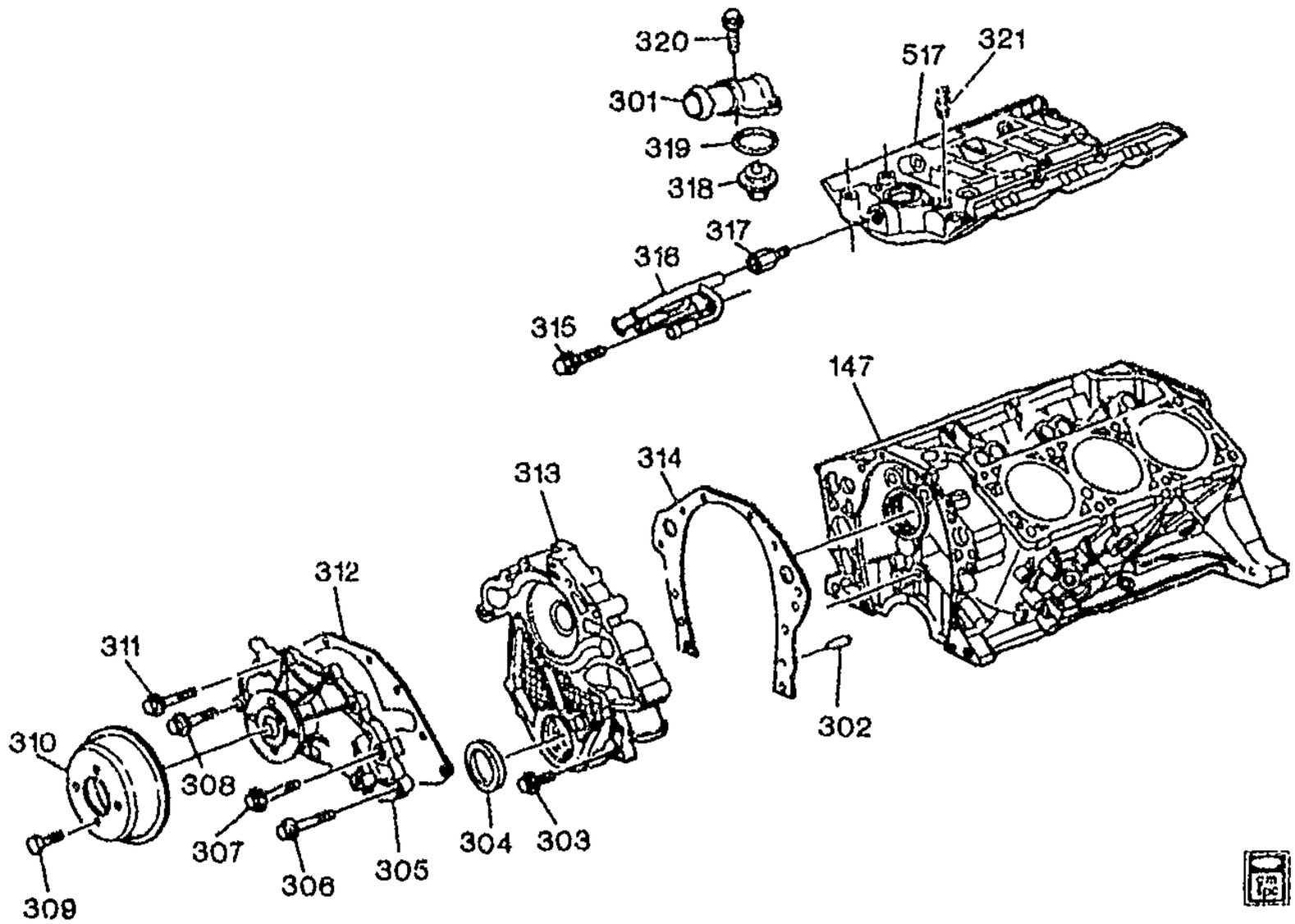

MF00-051

1993-1995 F ENGINE ASM-3.4L V6 PART 3 FRONT COVER & COOLING (L32/3.4S)

147.		N.S.	BLOCK, ENG (SERVICED BY GOODWRENCH ENGINE)		.....		
301.	1-L25	1.153	OUTLET, WAT (AC-DELCO #15-1584)	93-95	F (L32)	1	10151656
302.		8.939	PIN, M6X16 STL PL (ENG FRT CVR LOC)	93-95	....	1	11503504
303.		8.900	BOLT, HFH M8X1.25X35 10.9 PZOR (ENG FRT CVR) (0.206) ...	93-95	.....	3	24572579
304.	1-E16	0.213	SEAL, CR/SHF FRT OIL (TMG GR CVR) (ALSO PART OF 313) (61.42/61.32 MM O.D.)	93-95	F (L32)	1	10243247
305.	1-L23	1.069	PUMP, WAT (INCL 312) (AC-DELCO #251-619)	93-95	F (L32)	1	12482692
306.		8.900	BOLT, HFH M8X1.25X35 10.9 PZOR (W/PMP) (0.206)	93-95	.....	3	24572579
307.	1-E15	0.206	BOLT, ENG FRT CVR (M10X1.5X69.5)	93-95	F (L32)	4	10182369
308.	1-L23	1.079	BOLT, W/PMP (HFH, M6X1X24, 14 THD, 13.6 OD, 9.8, PE)	93-95	F (L32)	3	10182370
309.	1-L22	1.062	BOLT, W/PMP PUL (M8X1.25X16 17.6.9.8PZOR) (8.900)	93-95	F (L32)	4	11516186
310.	1-L22	1.062	PULLEY, W/PMP	93-95	F (L32)	1	10166377
311.		8.900	BOLT, HEX FLG HD (M8X1.25X70 10.9 17.6 OD 6174M (ENG FRT CVR)	93-95	.....	16	11509516

cardiagn.com

312.	1-L23	1.079	GASKET, W/PMP (ALSO PART OF 305)	93-95	F (L32)	1	10087563
313.	1-E15	0.206	COVER, ENG FRT (INCL 304)	93-95	F (L32)	1	10151670
314.	1-E16	0.207	GASKET, ENG FRT CVR	93-95	F (L32)	1	10189276
315.		8.900	BOLT, HFH-M8X1.25X20 (HTR INL PIPE)	93-95		1	11516186
316.	1-N27	8.846	PIPE, HTR INL	93-95	F (L32)	1	10189204
317.	1-N28	8.866	NIPPLE, HTR WAT ENG INL	93-95	F (L32)	1	88891732
318.	1-L25	1.246	THERMOSTAT, ENG COOL (INCL 319) (INCLS SEAL) (AC-DELCO #131-122)	93-95	F (L32)	1	24577299
319.	1-L25	1.252	SEAL, ENG COOL THERM (O RING) (ALSO PART OF 318) (WITH LIP) (46.80MM O.D.) (*KIT1) (AC-DELCO #10226107)	93-95	F (L32)	1	10226107
320.		8.900	BOLT, M8X1.25X25 9.8 (WAT OTLT)	93-95		2	11508476
321.	1-N14	3.682	SENSOR, ENG COOL TEMP (AT INT MANIF ONLY, INTERFACES W/ECM, USED FOR CLUSTERS W/OIL GAGE & LIGHT COMBINATION, GOES W/12101899 CONN) (AT INT MANIFOLD ONLY) (2-WAY M) (AC-DELCO #213-310)	93-95	F (L32)	1	12146312
	1-L24	1.150	SENSOR, ENG COOL TEMP (AT INT MANIF, INTERFACES W/ECM, USED FOR CLUSTERS W/OIL GAGE & LIGHT COMB, GOES W/12101899 CONN) (AT INT MANIFOLD ONLY) (2-WAY M) (3.682) (AC-DELCO #213-310)	93-95	F (L32)	1	12146312
517.	1-M25	3.265	MANIFOLD, LWR INT	93-95	F (L32)	1	10137051

SERVICE KITS

1.	1-E16	0.289	GASKET KIT, CYL HD (INCI 324) (KIT ALSO INCLUDES GASKETS AND OR SEALS FOR CYLINDER HEAD, INTAKE MANIFOLDS, EGR VALVE PIPE VALVE ROCKER ARM COVER AND INTAKE VALVE STEM OIL)	93-95	F (L32)	1	12520757

RPO DEFINITIONS

L32 - ENGINE,3.4L,V6,(3.4S),SFI,OHV

cardiagn.com

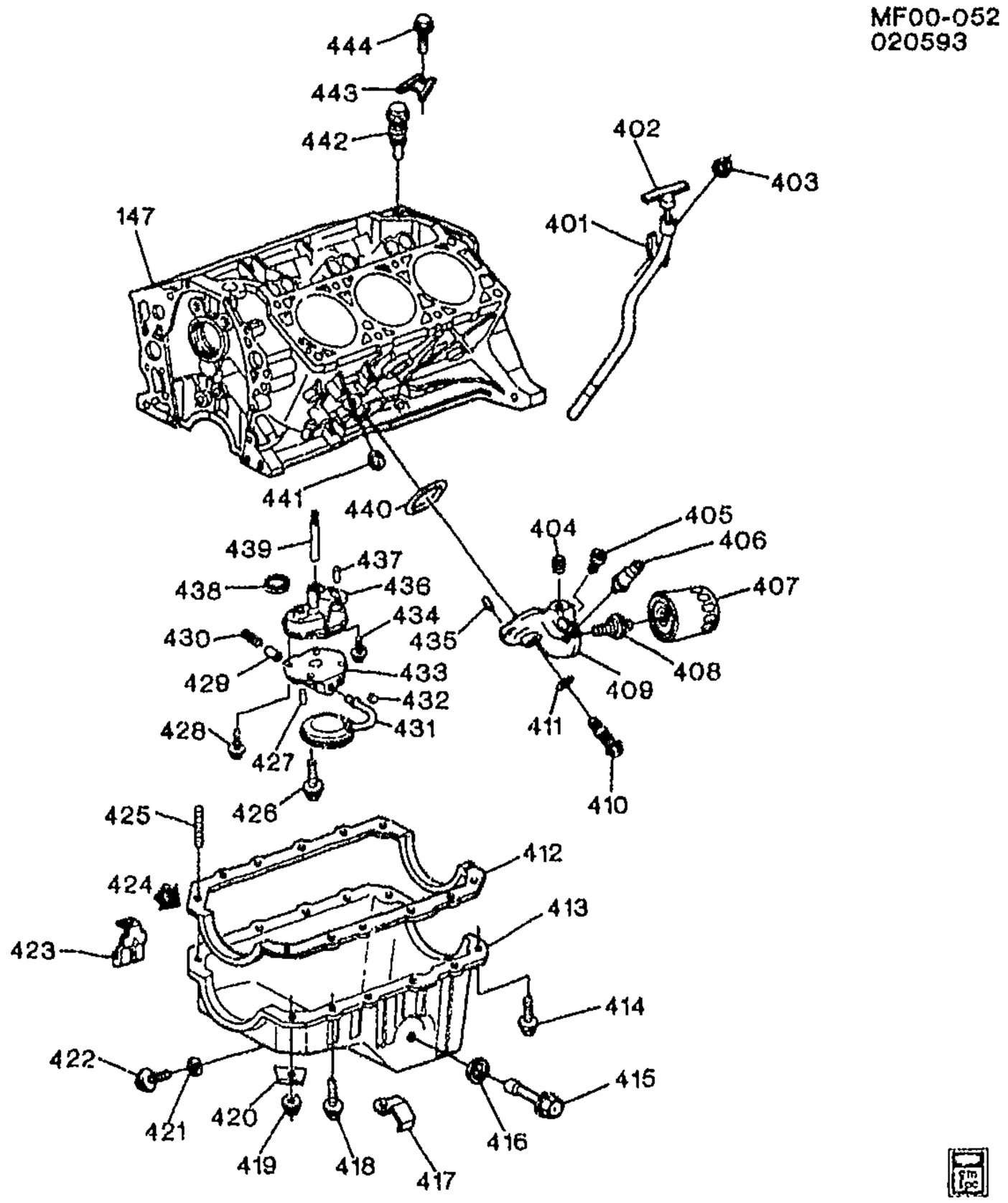

MF00-052

1993-1995 F ENGINE ASM-3.4L V6 PART 4 OIL PUMP, PAN & RELATED PARTS (L32/3.4S)

147.		N.S.	BLOCK, ENG (SERVICED BY GOODWRENCH ENGINE)		.....		
401.	1-L27	1.516	TUBE, OIL LVL IND	93-95	F (L32)	1	10151690
402.	1-L27	1.516	INDICATOR, OIL LVL	93-95	F (L32)	1	24504405
403.		8.917	NUT, HFH, M8X1.25, 17.9 OD, 738 THK, 13MM HEX, 10, ZF (OIL LVL IND TUBE) (8.915) (AC-DELCO #11514596)	93-95	.....	1	11514596
404.		8.971	PLUG, HEX SOC, .250-18, .69 LNG, PC, DOG PT (ALSO PART OF 409) (OIL FLTR ADAP HOLE) .	93-95	.....	1	12338136
405.	1-M6	1.837	VALVE, OIL FLTR BYPASS (W/CAGE, SEAT, SPRING & VALVE) (AC-DELCO #25014006)	93-95	F (L32)	1	25014006

cardiagn.com

406.	1-M5	1.800	**SENSOR**, ENG OIL PRESS GA (3 TERMINALS:A, C, D) (AC-DELCO #D1808A)	93	F (L32)	1	12555492
	1-M5	1.800	**SENSOR**, ENG OIL PRESS GA (3 TERMINALS:A, C, D) (AC-DELCO #D1808A) (W/O GROUND CONNECTION)	94	F (L32) (1ST DES)	1	12555492
	1-M5	1.800	**SENSOR**, ENG OIL PRESS GA (W/2 TERM) (W/GROUND CONNECTION)	94	F (L32) (2ND DES)	1	15955710
	1-M5	1.800	**SENSOR**, ENG OIL PRESS GA (W/2 TERM)	95	F (L32)	1	15955710
407.	1-M6	1.836	**FILTER**, OIL (AC-DELCO #PF47)	93-95	F (L32)	1	25010792
	1-M6	1.836	**FILTER**, OIL (AC-DELCO #UPF47)	93-95	F (L32)	1	25322835
	1-M6	1.836	**FILTER**, OIL (AC-DELCO #SPF47)	93-95	F (L32)	1	25325404
408.	1-M7	1.855	**FITTING**, OIL FLTR (ALSO PART OF 409)	93-95	F (L32)	1	466383
409.	1-M7	1.840	**ADAPTER**, OIL FLTR (INCL 404, 408, 435)	93-95	F (L32)	1	10182371
410.	1-M7	1.840	**BOLT**, OIL FLTR ADAP	93-95	F (L32)	1	12537215
411.	1-M7	1.840	**SEAL**, OIL FLTR ADAP BOLT (1.844)	93-95	F (L32)	1	14033233
412.	1-L26	1.429	**GASKET**, OIL PAN	93-95	F (L32)	1	14090535
413.	1-L25	1.426	**PAN**, OIL (INCL 421, 422)	93-95	F (L32)	1	10115790
414.	1-L26	1.428	**BOLT**, OIL PAN (USED AT #11, 12 HOLES) (M8X1.25X14)	93-95	F (L32)	2	14077877
415.	1-L27	1.516	**SENSOR**, ENG OIL LVL (INCL 416)	93-95	F (L32)	1	24507190
416.	1-L27	1.516	**SEAL**, ENG OIL LVL SEN (ALSO PART OF 415)	93-95	F (L32)	1	10151633
417.	1-M12	2.383	**CLIP**, CR/SHF POSN SEN WRG HARN (BLACK POLYPROPYLENE) (6MM) (CNVLT CDT) (SUPPORTS 24X SEN HARN)	93-95	F (L32)	1	12040984
	1-M12	2.383	**CLIP**, CR/SHF POSN SEN WRG HARN (2.559)	93-95	F (L32)	2	12553341
418.		8.900	**BOLT**, HFX 6X1X16 14.2 HD OD FULL THD PS9.8 (OIL PAN) (USED AT #3, 5, 7, 8, 9&10 HOLES)	93-95		8	11513754
419.		8.917	**NUT**, HFH M6X1X6.5 ZOR 9 (OIL PAN)	93-95		2	3530297
420.	1-L25	1.426	**REINFORCEMENT**, OIL PAN (FRT)	93-95	F (L32)	2	14089825
421.	1-L27	1.456	**GASKET**, OIL PAN DRN PLUG (ALSO PART OF 413)	93-95	F (L32)	1	14090908
422.	1-L26	1.453	**PLUG**, OIL PAN DRN (ALSO PART OF 413) (M12X1.75X26.5)	93-95	F (L32)	1	10017615
423.	1-N25	4.128	**CLIP**, TRANS FLUID CLR PIPE	94-95	F (M30)	1	10225624
	1-N25	4.128	**CLIP**, TRANS FLUID CLR PIPE	94-95	F (L32, M30)	1	14027939
	1-N25	4.128	**CLIP**, TRANS FLUID CLR PIPE (POS #1)	93	F (MD8)	1	10225624
	1-N25	4.128	**CLIP**, TRANS FLUID CLR PIPE (POS #4)	93	F (L32, MD8)	1	14027939

cardiagn.com

424.		8.800	SEALANT, RTV SILICONE RUBR (3.35 OZ TUBE) (OIL PAN)	93-95	.....	AR	12345739
425.	1-L26	1.428	STUD, OIL PAN (M6X1X29.7) (M6X1.0X29.7)	93-95	F (L32)	AR	10044847
	1-L26	1.428	STUD, OIL PAN (USED AT #1&2 HOLES) (M6X1 BOTH ENDS, 8.75, 8.25, TORX, POR, 280M) (8.981)	93-94	F (L32)	2	14091880
426.	1-M2	1.652	BOLT, O/PMP (M10X1.5X50 10.9 POR) (8.900)	93-95	F (L32)	1	11508355
427.	1-M2	1.609	PIN, OIL PRESS RLF VLV SPR ST (ALSO PART OF 433)	93-95	F (L32)	1	838839
428.		8.900	BOLT, HFH (M6X1X20 9.8 PZOR (O/PUMP CVR) (ALSO PART OF 436) (AC-DELCO #11508600) ..	93-95	.....	2	11508600
429.	1-M2	1.609	VALVE, OIL PRESS RLF (ALSO PART OF 433)	93-95	F (L32)	1	3702366
430.	1-M2	1.609	SPRING, OIL PRESS RLF VLV (ALSO PART OF 433)	93-95	F (L32)	1	10044435
431.	1-M3	1.656	SCREEN, O/PMP (W/TUBE)	93-95	F (L32)	1	10118624
432.	1-M2	1.609	PLUG, OIL PRESS RLF VLV BORE (ALSO PART OF 433) (NON-THD 7/16 DIA, 13/32 LGTH) (CHAM ENDS, STL)	93-95	F (L32)	1	3704871
433.	1-M3	1.723	COVER, O/PMP (ALSO PART OF 436) (INCL 427, 429, 430, 432) ...	93-95	F (L32)	1	10118627
434.	1-M3	1.723	BOLT, O/PMP CVR (ALSO PART OF 436) (O/PMP CVR) (HEX 6X1X25 10.9 PS 23MM THD) (8.900) (AC-DELCO #11509417)	93-94	.....	4	11509417
		8.900	BOLT, HFH M10X1.5X50 10.9 POR (ALSO PART OF 436) (O/PMP CVR)	94-95	.....	4	11508355
435.		8.939	PIN, M6X16 STL PL (ALSO PART OF 409) (OIL FLTR ADAP)	93-95	.....	1	11503504
436.	1-M2	1.652	PUMP, OIL (INCL 428, 433, 434) .	93-95	F (L32)	1	10118640
437.		8.939	PIN, M6X16 STL PL (O/PMP LOC)	93-95	.....	1	11503504
438.	1-M4	1.724	SEAL, O/PMP (O RING) (ALSO PART OF 442) (1.639) (AC-DELCO #10477565)	93-95	F (L32)	1	10477565
439.	1-M2	1.639	SHAFT, O/PMP DRV	93-95	F (L32)	1	477248
440.	1-M7	1.840	GASKET, OIL FLTR ADAP (1 RET HOLE) (GSKT MAY LOOK DIFFERENT THAN ORIGINAL) ...	93-95	F (L32)	1	12337894
441.	1-M6	1.837	PLUG, OIL FLTR BYPASS HOLE (.25-18X.475 FULL THREAD) (8.971)	93-94	F (L32)	1	14081701
	1-M6	1.837	PLUG, OIL FLTR BYPASS HOLE (INT SOC, 1/4-18 THD, .41, W/THD SEALER) (8.970)	93-95	F (L32)	1	14102589
442.	1-M2	1.639	DRIVE, O/PMP (INCL 438) (AC-DELCO #1104072)	93-95	F (L32)	1	1104072
443.	1-M2	1.639	CLAMP, O/PMP DRV (2.363)	93-95	F (L32)	1	477217
444.		8.900	BOLT, M10X1.5X35 (O/PMP DRV CLA)	93-95	.....	1	11513606

RPO DEFINITIONS
L32 - ENGINE,3.4L,V6,(3.4S),SFI,OHV

cardiagn.com

MD8 – TRANSMISSION,AUTOMATIC 4–SPEED(THM700R4/4L60)
M30 – TRANSMISSION,AUTOMATIC 4 SPEED,4L60E,ELECTRONIC

cardiagn.com

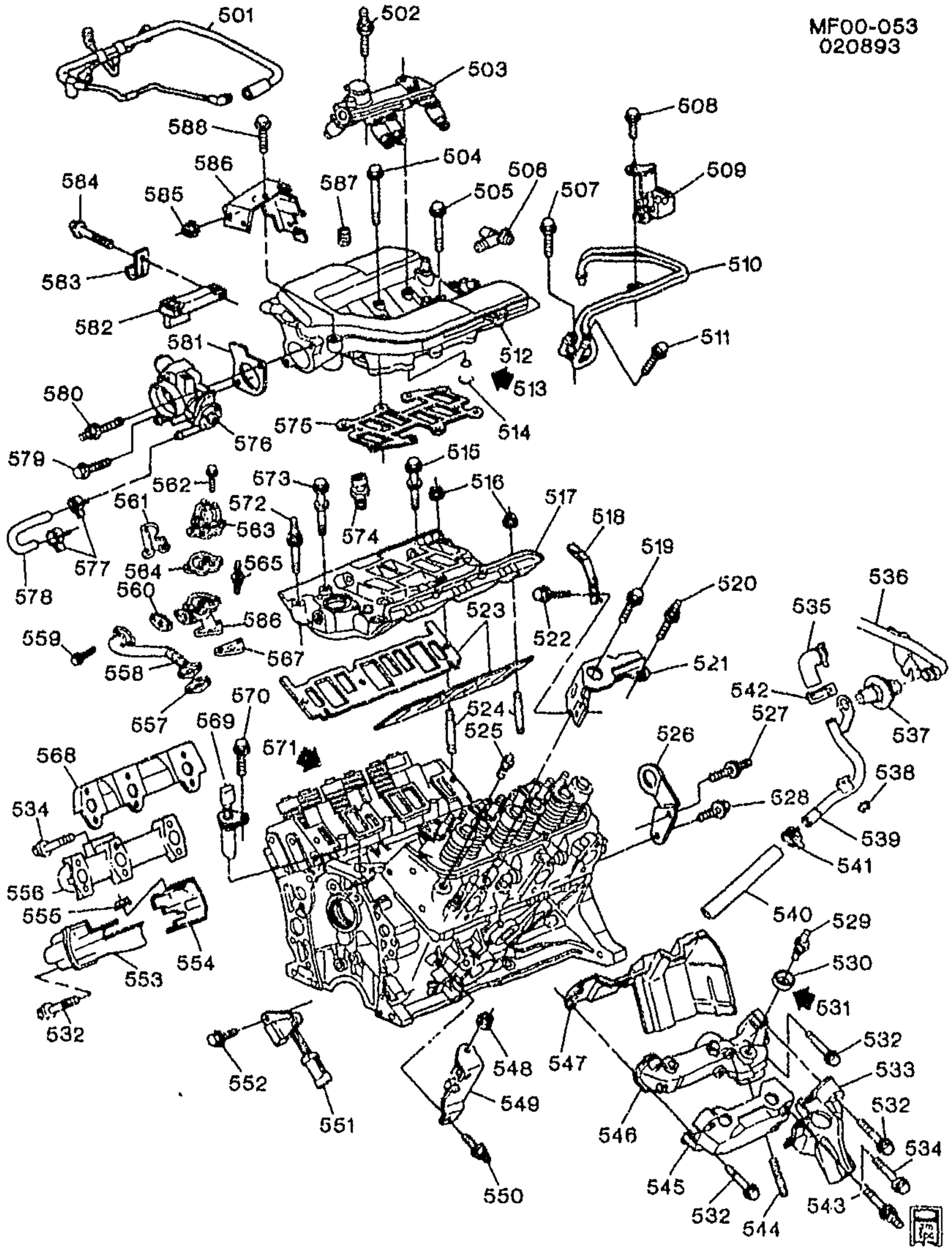

MF00-053

1993-1995 F ENGINE ASM-3.4L V6 PART 5 MANIFOLDS & FUEL RELATED PARTS (L32/3.4S)

501.	1-M4	1.745	HARNESS, PCV VLV (SEE "VAPOR CANISTER LINES & VALVES" ILLUSTRATION IN GRP. 3.000 FOR DETAILED VIEW.)	93-95 F (L32)	1	10217828

cardiagn.com

502.	1-M28	3.330	STUD, F/INJN FUEL RL (M6X1/M8X1.25) (3.265)	93-95	F (L32)	1	14089222
503.		N.S.	RAIL, SEQ M/PORT F/INJN FUEL (SEE "FUEL INJECTOR RAIL" ILLUSTRATION IN GRP. 3.000 FOR DETAILED VIEW.)				
504.	1-M26	3.275	BOLT, INT UPR MANIF (M8X1.25X84MM)	93-95	F (L32)	6	14078896
505.	1-M26	3.275	BOLT, INT UPR MANIF (M8X1.25X70) (7.518)	93-95	F (L32)	2	10062904
506.	1-M27	3.278	FITTING, INT MANIF VAC (ALSO PART OF 512)	93-95	F (L32)	1	10044942
507.		8.900	BOLT, HFH, M8X1.25X20, 17THD, 18OD (FUEL PIPE BRKT)	93-95		1	11515756
508.		8.900	BOLT, HFH (M6X1X20 9.8 PZOR (EVAP EMIS CNSTR PURGE SOL VLV BRKT) (AC-DELCO #11508600)	93-95		1	11508600
509.		N.S.	VALVE, EVAP EMIS CNSTR PURGE SOL (SEE "VAPOR CANISTER & LINES" ILLUSTRATION IN GRP. 3.000 FOR DETAILED VIEW.)				
510.	1-M25	3.163	PIPE, FUEL FEED & RTN (2-LINE STEEL)	93-95	F (L32)	1	10191707
	1-M25	3.163	PIPE, FUEL FEED & RTN	93	F87	1	10268081
	1-M25	3.163	PIPE, FUEL FEED & RTN	94-95	F67 (L32)	1	10268082
	1-M25	3.163	PIPE, FUEL FEED & RTN	94-95	F87 (L32)	1	10268081
511.		8.977	SCREW, HWH TAP M6.3X1.81X13 13 OD PZOR (FUEL FEED PIPE CLIP)	93-95		1	12338139
512.	1-M25	3.265	MANIFOLD, UPR INT (INCL 506, 513, 514, 587)	93-95	F (L32)	1	10118668
513.		8.800	SEALANT (ALSO PART OF 512) (INT MANIF VAC TUBE) (1.097)	93-95		AR	12345493
514.	1-M25	3.265	TUBE, INT MANIF VAC (ALSO PART OF 512)	93-95	F (L32)	1	10078957
515.	1-M26	3.275	BOLT, INT MANIF (#2, 3, 4, 8 9 HOLES) (M8X1.25X65)	93-95	F (L32)	5	10070191
516.	1-M26	3.275	NUT, LWR INT MANIF (M8X1.25, W/CON WASHER)	93-95	F (L32)	3	10070189
	1-M26	3.275	NUT, LWR INT MANIF (M8X1.25) (8.915) (AC-DELCO #11514596)	94	F (L32)	1	11514596
517.	1-M25	3.265	MANIFOLD, LWR INT	93-95	F (L32)	1	10137051
518.		DISCON	BRACKET, FUEL PIPE (3.162)				10154714
519.		8.900	BOLT, HFH M10X1.5X20 9.8 PZOR (ENG LIFT FRT BRKT)	93-95		1	11508202
520.	1-E13	0.004	STUD, ENG LIFT FRT BRKT (HFH 10X1.5X20, M8X 1.25X15, 9.8 POR, 21.5 OD 43.5 TL)	93-95	F (L32)	2	10048662
521.	1-E13	0.004	BRACKET, ENG LIFT FRT	93-95	F (L32)	1	10055426
522.		8.900	BOLT, HEX LARGE FLANGED M6X1X10 PC (FUEL PIPE BRKT)	93-95		1	11508567
523.		N.S.	GASKET, LWR INT MANIF (*KIT1, KIT2)				
524.	1-M26	3.275	STUD, LWR INT MANIF (M8X1.25X15, M8X1.25X28)	93-95	F (L32)	3	10044959

cardiagn.com

525.	1-L24	1.150	**SENSOR**, ENG COOL T/GA (3/8-18 THD) (2 TERM, CAN BE USED AS 1 TERM CONN) (AC-DELCO #213-77)	93-95	F (L32)	1	25037332
526.	1-E13	0.004	**BRACKET**, ENG LIFT RR	93-95	F (L32)	1	14033070
527.	1-E13	0.004	**STUD**, ENG LIFT RR BRKT (1993 ONLY) (HFH 10X1.5X20, M8X 1.25X15, 9.8 POR, 21.5 OD 43.5 TL)	93	F	AR	10048662
528.		8.900	**BOLT**, HFH M10X1.5X20 9.8 PZOR (ENG LIFT RR BRKT)	93-95		AR	11508202
529.	1-N14	3.682	**SENSOR**, HTD OXY (W/WIRE LEAD, M18X1.5-6E) (AC-DELCO #AFS22)	93-95	F (L32)	2	25162753
530.	1-N14	3.680	**GASKET**, OXY SEN	93-95	F	2	5617102
531.		8.800	**LUBRICANT**, ANTI-SEIZE (DRY FILM), 4 OZ., BRUSH TOP CAN (OXY SEN)	93-95		AR	12377953
532.	1-M26	3.275	**BOLT**, EXH MANIF	93-95	F (L32)	8	10191777
533.	1-N4	3.602	**SHIELD**, EXH MANIF HT (REAR)	93-95	F (L32)	LH	10191771
534.	1-M26	3.275	**BOLT**, EXH MANIF	93-95	F (L32)	AR	10191778
535.	1-N14	3.680	**CONNECTOR**, SECD AIR INJN CHK VLV PIPE (AT PIPE) (3.675)	93-95	F (L32)	1	10217106
	1-N14	3.680	**CONNECTOR**, SECD AIR INJN CHK VLV PIPE (AT PIPE) (5/8 X 5/8 X 3/16)	94-95	F (L32, M49)	1	24504030
536.	1-N11	3.675	**PIPE**, SECD AIR INJN CHK VLV (AC-DELCO #10235782)	93	F (L32, M49)	1	10235782
	1-N11	3.675	**PIPE**, SECD AIR INJN CHK VLV (AC-DELCO #10235782)	94-95	F (L32, M49)	1	10235782
537.	1-N5	3.670	**VALVE**, SECD AIR INJN CHK (AC-DELCO #214-419)	93-95	F (L32, M49)	2	22048212
538.		8.917	**NUT**, HFH, M8X1.25, 17.9 OD, 738 THK, 13MM HEX, 10, ZF (SECD AIR INJN PIPE) (8.915) (AC-DELCO #11514596)	93-95		1	11514596
539.	1-N11	3.675	**PIPE**, SECD AIR INJN PUMP (BACK PIPE) (AC-DELCO #219-212)	93-95	F (L32, M49)	1	10227073
540.	1-N11	3.675	**HOSE**, SECD AIR INJN PUMP	93-95	F (L32, M49)	1	10242422
541.		8.948	**CLAMP**, 28.6-86.2 DIA WORM GEAR (SECD AIR INJN PUMP HOSE) (AC-DELCO #12338017)	93-95		1	12338017
542.		8.948	**CLAMP**, SPR (25-29MM) (SECD AIR INJN CHK VLV HOSE)	93-95		2	10108255
543.	1-M26	3.275	**STUD**, EXH MANIF	93-95	F (L32, M49)	LH	10191776
544.	1-N5	3.613	**STUD**, EXH PIPE	93-95	F (L32)	4	10220453
545.	1-N4	3.602	**SHIELD**, EXH MANIF HT (FRONT)	93-95	F (L32)	LH	10191774
546.	1-N3	3.601	**MANIFOLD**, EXH	93-95	F (L32)	LH	10182337
547.	1-N4	3.602	**SHIELD**, EXH MANIF HT INR (3.270)	93-95	F (L32)	LH	10191769
548.		8.915	**NUT**, HFH, 10X1.5 6H THD, 21.3 OD, 9.8 THK 13 HEX DR, GRD 9, ZF (P/S PMP SUPT) (8.917)	93-95		1	10255857
549.	1-N27	6.606	**BRACE**, P/S PUMP RR	93-95	F (L32)	1	10166314

cardiagn.com

550.	1-N27	6.606	STUD, P/S PUMP SUPT (HFH M8X1.25X16 M8X1.25X15, 38 TL, 17.6 OD, POR, 9.8)) (3.275)	93-95	F (L32)	1	10066675
551.	1-M12	2.383	SENSOR, CR/SHF POSN (24X TO ECM) (AC-DELCO #213-147)	93-95	F (L32)	1	10137663
552.	1-M12	2.383	BOLT, CR/SHF POSN SEN (CR/SHF POSN SEN) (6X1X16 9.8 PE) (24XTO ECM)) (8.900) ...	93-95	F (L32)	2	10205042
553.	1-N4	3.602	SHIELD, EXH MANIF HT (FRONT)	93-95	F (L32)	RH	10151694
554.	1-N4	3.602	SHIELD, EXH MANIF HT (REAR) .	93-95	F (L32)	RH	10191772
555.		8.917	NUT, HFH M6X1X6.5 ZOR 9 (EXH MANIF H/SHLD)	93-95	.....	1	3530297
556.	1-N3	3.601	MANIFOLD, EXH (MUST ALSO ORDER 445096 PLUG AND 12345493 SEALANT)	93	F (L32, MD8)	RH	10151692
	1-N3	3.601	MANIFOLD, EXH	93-95	F (L32, M49)	RH	10151692
	1-N3	3.601	MANIFOLD, EXH (MUST ALSO ORDER 445096 PLUG AND 12345493 SEALANT)	94-95	F (L32, M30)	RH	10151692
557.	1-N14	3.680	GASKET, EGR VLV PIPE (66MM LONG) (*KIT2) (AC-DELCO #10239631)	93-95	F (L32)	1	10239631
558.	1-N11	3.675	PIPE, EGR VLV	93-95	F (L32)	1	10217283
559.	1-N11	3.675	BOLT, EGR VLV PIPE (0.862)	93-95	F (L32)	4	14079747
560.	1-N14	3.680	GASKET, EGR VLV PIPE (TRFR TUBE) (*KIT2)	93-95	F (L32)	1	10115838
561.	1-N11	3.675	SHIELD, EGR VLV PIPE HT	93-95	F (L32)	1	10215538
562.	1-N11	3.671	BOLT, EGR VLV (M8X1.25X25) (8.900)	93-95	F (L32)	1	11508040
563.	1-N5	3.670	VALVE, EGR (PROD 17091147) (W/O GASKET) (AC-DELCO #214-5004)	93-95	F (L32)	1	17091147
564.	1-N14	3.680	GASKET, EGR VLV (3.671) (AC-DELCO #219-323)	93-95	F (L32)	1	10100094
565.	1-N11	3.675	STUD, EGR VLV PIPE (M8X1.25X20 / M8X1.25X15) (2.183) (AC-DELCO #14054461)	93-95	F (L32)	1	14054461
	1-N11	3.675	STUD, EGR VLV PIPE (M6X1/M8X1.25) (3.265)	93-95	F (L32)	1	14089222
566.	1-N14	3.680	ADAPTER, EGR VLV	93-95	F (L32)	1	10099940
567.	1-N11	3.671	GASKET, EGR VLV ADAP	93-95	F (L32)	1	10191741
568.	1-N4	3.602	SHIELD, EXH MANIF HT INR	93-95	F (L32)	RH	10233874
569.	1-M12	2.383	SENSOR, CM/SHF POSN (AC-DELCO #213-245)	93-95	F (L32)	1	24508214
570.	1-M12	2.383	BOLT, CM/SHF POSN SEN (M6 X 1 X 12) (HFH, 9.8 PE, 12.8 OD DR) (8.900) (AC-DELCO #11514149)	93-95	F (L32)	1	11514149
	1-M12	2.383	BOLT, CM/SHF POSN SEN (M6X1X12, FL HD) (8.900)	93-95	F (L32)	1	11516061
571.		8.800	SEALANT, RTV SILICONE RUBR (3.35 OZ TUBE) (LWR INT MANIF)	93-95	.....	AR	12345739
572.	1-M26	3.275	STUD, LWR INT MANIF (USED AT #6 HOLE)	93-95	F (L32)	1	10069224

cardiagn.com

573.	1-M26	3.275	**BOLT**, LWR INT MANIF (#7 HOLE) (M8X1.25X55)	93-95	F (L32)	1	10070190
574.	1-N14	3.682	**SENSOR**, ENG COOL TEMP (AT INT MANIF ONLY, INTERFACES W/ECM, USED FOR CLUSTERS W/OIL GAGE & LIGHT COMBINATION, GOES W/12101899 CONN) (2-WAY M) (AC-DELCO #213-310)	93-95	F (L32)	1	12146312
	1-L24	1.150	**SENSOR**, ENG COOL TEMP (AT INT MANIF, INTERFACES W/ECM, USED FOR CLUSTERS W/OIL GAGE & LIGHT COMB, GOES W/12101899 CONN) (2-WAY M) (3.682) (AC-DELCO #213-310)	93-95	F (L32)	1	12146312
575.	1-M25	3.270	**GASKET**, UPR INT MANIF (*KIT1, KIT2)	93-95	F (L32)	1	14097620
576.	1-M28	3.335	**BODY**, THROT (SEE GROUP 3.000"THROTTLE BODY"FOR DETAIL ILLUSTRATED) (AC-DELCO #17093074)	93-95	F (L32, M49)	1	17093074
	1-M28	3.335	**BODY**, THROT (SEE GROUP 3.000"THROTTLE BODY"FOR DETAIL ILLUSTRATED) (AC-DELCO #17093126)	93	F (L32. MD8)	1	17093126
	1-M28	3.335	**BODY**, THROT (SEE GROUP 3.000"THROTTLE BODY"FOR DETAIL ILLUSTRATED)	94	F (L32, M30)	1	17094150
577.		8.948	**CLAMP**, WORM GEAR, 1/2-13/16 (THROT BODY HTR OTLT HOSE)	93-95	.....	4	22527587
578.	1-N2	3.337	**HOSE**, THROT BODY HTR INL ...	93-95	F (L32)	2	10151660
579.	1-N19	3.726	**BOLT**, TBI (TBI) (M8X1.25X45, 22 THD, 17 OD, 9.8, PE) (8.900)	93	F (L32)	1	11514158
	1-N19	3.726	**BOLT**, TBI (TBI) (M8X1.25X45, 22 THD, 17 OD, 9.8, PE) (8.900)	94-95	F (L32)	2	11514158
580.	1-N2	3.336	**STUD**, THROT BODY (1993 ONLY) (REFER TO ITEM #579 FOR 1994 USAGES) (M8X1.25X43) (3.417)	93	F	1	10048605
581.	1-N2	3.336	**GASKET**, THROT BODY (3.726) (AC-DELCO #40-749)	93-95	F (L32)	1	24504016
582.	1-N14	3.682	**SENSOR**, MAP (1 PORT, 3 TERM, 2 BOLT HOLES) (AC-DELCO #213-185)	93-95	F (L32)	1	16137039
583.		N.S.	**CLIP**, ENG WRG HARN		.....		
584.		8.977	**BOLT**, HEX W/FL WA M4.2X1.41X50 TAP POR (MAP SEN)	93-95	.....	2	11508306
585.		8.917	**NUT**, HFH, M8X1.25, 17.9 OD, 738 THK, 13MM HEX, 10, ZF (ACCEL CONT CBL BRKT) (8.915) (AC-DELCO #11514596)	93-95	.....	1	11514596
586.		DISCON	**BRACKET**, ACCEL CONT CBL ...	93	F (L32)	1	10111608
		DISCON	**BRACKET**, ACCEL CONT CBL ...	94-95	F (L32)	1	10215388

cardiagn.com

587.	1-M25	3.265	PLUG, UPR INT MANIF CORE HOLE (ALSO PART OF 512) (AUTO DRAIN, INT SQ, 3/8-18X.42 PEOR STL) (8.971) ..	93-95	F (L32)	1	14090911
588.		8.900	BOLT, M8X1.25X14 (ACCEL CONT CBL BRKT)	93-95	.....	1	25534835

SERVICE KITS

1.	1-M25	3.270	GASKET KIT, INT MANIF (SI) (INCL 523, 575)	93-95	F (L32)	1	12520756
2.	1-E16	0.289	GASKET KIT, CYL HD (INCL 523, 557, 560, 575) (KIT ALSO INCLUDES GASKETS AND OR SEALS FOR CYLINDER HEAD, VALVE ROCKER ARM COVER, INTAKE VALVE STEM OIL AND ENGINE COOL THERM)	93-95	F (L32)	1	12520757

RPO DEFINITIONS
L32 - ENGINE,3.4L,V6,(3.4S),SFI,OHV
MD8 - TRANSMISSION,AUTOMATIC 4-SPEED(THM700R4/4L60)
M30 - TRANSMISSION,AUTOMATIC 4 SPEED,4L60E,ELECTRONIC
M49 - TRANSMISSION MAN 5 SPD, BORG WARNER, 77MM, 3.75 1ST, .76 5TH, O/D

cardiagn.com

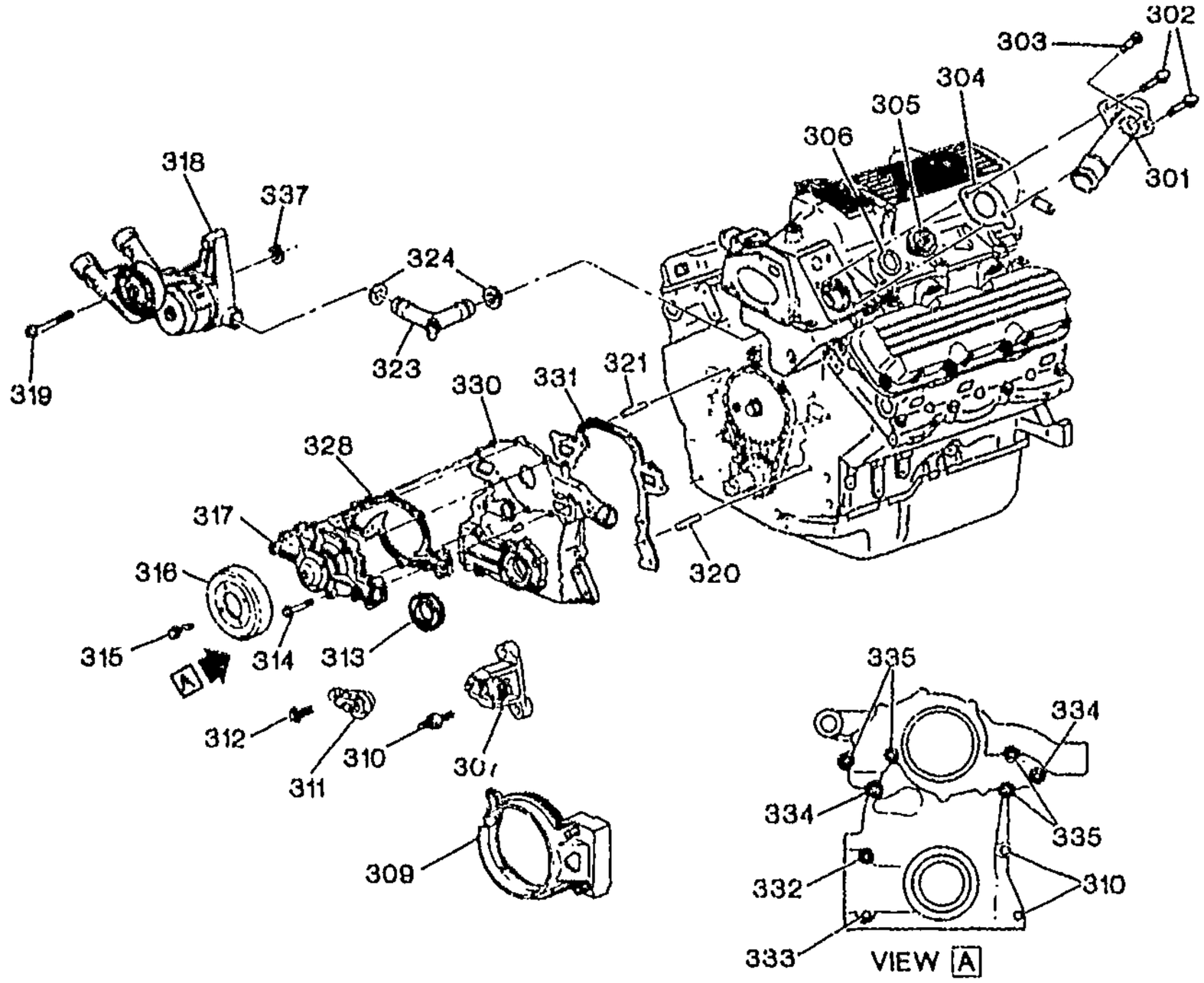

GM00-287

1995-1997 F ENGINE ASM-3.8L V6 PART 3 FRONT COVER AND COOLING (L36/3.8K)

301.	1-L25	1.153	OUTLET, WAT (W/O VALVE) (AC-DELCO #15-1704)	95-97	F (L36)	1	24503978
302.	1-L25	1.153	BOLT, WAT OTLT (M8X1.25X25) (8.900)	95-97	F (L36)	1	11508040
	1-L25	1.153	BOLT, WAT OTLT (THRU UPR TO LWR INT) (M8X1.25X66.4, 27 THD) (3.275) (HFH, M8X1.25X66.4, 27 THD, 15 OD, 9.8, PO, MACH)	95-97	F (L36)	1	24 11552
303.	1-L21	1.035	VALVE, ENG COOL AIR BL	95-97	F (L36)	1	25535220
304.	1-L25	1.154	GASKET, WAT OTLT	95-97	F (L36)	1	24502433
305.	1-L25	1.246	THERMOSTAT, ENG COOL (W/GSKT) (INCL 306) (195 DEG) (AC-DELCO #131-115)	95-97	F (L36)	1	24506986
306.	1-L25	1.252	SEAL, ENG COOL THERM (O RING) (ALSO PART OF 305) (AC-DELCO #25535126)	95-97	F (L36)	1	25535126
307.	1-M12	2.383	SENSOR, CR/SHF POSN (4 PIN) (AC-DELCO #213-151)	95-97	F (L36)	1	10456161
309.	1-M12	2.383	SHIELD, CR/SHF POSN SEN	95-97	F (L36)	1	24506440

cardiagn.com

310.	1–E15	0.206	STUD, ENG FRT CVR (ALSO HOLD CR/SHF SENSOR SHIELD & SENSOR) (HEX W/.65 OD X .06 THK WA, 5/16–18X1.53 W/1.1 THD)	95–97	F (L36)	2	24504717
311.	1–M12	2.383	SENSOR, CM/SHF POSN (AC–DELCO #213–346)	95–97	F (L36)	1	10456148
312.	1–M12	2.383	BOLT, CM/SHF POSN SEN (HEX–W/FLAT WA, 1/4–20X.69, .55 THD, 5 OD, 300M, PL, W/ADHES) (AC–DELCO #25526395)	95–97	F (L36)	1	25526395
313.	1–E16	0.213	SEAL, CR/SHF FRT OIL (87.78/87.25 MM O.D.)	95–97	F (L36)	1	24504098
314.	1–L23	1.079	BOLT, W/PMP (CLNT PUMP TO FRT CVR) (1/4–20X1.17, 1.03 THD) (W/SEALER 01052080)	95–97	F (L36)	4	25535660
315.		8.977	BOLT, M6X1X13, 10 THD, 12.5 OD (W/PMP PUL)	95–96	F (L36)	4	11509699
	1–L22	1.062	BOLT, W/PMP PUL (W/PMP PUL) (M6X1.0 6G THD W/WSHR) (8MM SOCKET HD)	96–97	F (L36)	4	24503961
316.	1–L22	1.062	PULLEY, W/PMP	95	F (L36)	1	25534838
	1–L22	1.062	PULLEY, W/PMP	96–97	F (L36)	1	24504931
317.	1–L23	1.069	PUMP KIT, WAT (AC–DELCO #251–545)	95	F (L36)	1	12482919
	1–L23	1.069	PUMP KIT, WAT (AC–DELCO #251–562)	96–97	F (L36)	1	12482903
318.	1–L22	1.060	TENSIONER, DRV BELT	95–97	F (L36)	1	24504818
319.	1–L22	1.060	BOLT, DRV BELT TENSR (M10X1.5X60, 13MM OD, HEX HD, 10.9, GM500 STEEL) (HFH, M10X1.50X60, 26 THD, 22.3 OD, 10.9, 7114M, MACH, HDR–PT) (8.900)	95–97	F (L36)	2	11515772
320.	1–E15	0.206	PIN, ENG FRT CVR LOC (1/4 X 1–3/8", STEEL) (CHAMFERED ENDS) (8.939)	95–97	F (L36)	1	25536323
321.	1–E15	0.206	PIN, ENG FRT CVR LOC (DWL PIN, 0.25X0.875, STL, PL, CHAMFERED ENDS)	95–98	F (L36)	2	24501162
323.	1–N27	8.846	PIPE, HTR WAT BYPASS INL (INCL 324)	95–97	F (L36)	1	24503423
324.	1–N27	8.846	SEAL, HTR WAT BYPASS INL PIPE (O RING) (ALSO PART OF 323) (0.674" ID) (9.260)	96–97	F (L36)	2	25537068
	1–N27	8.846	SEAL, HTR WAT BYPASS INL PIPE (O RING) (ORANGE W/BLK COATING) (ALSO PART OF 323) (0.674" ID) (9.260) (FOR 2ND DES SEE 24505540) (TO TENIONER ASM)	95	F (L36, M30) (1ST DES)	1	25537068
	1–N27	8.846	SEAL, HTR WAT BYPASS INL PIPE (O RING) (TO LWR INT MANIF) (ALSO PART OF 323) (PURPLE) (PURPLE) (FOR 1ST DES SEE 25537068)	95	F (L36) (2ND DES)	1	24505540
328.	1–L23	1.079	GASKET, W/PMP CVR	95–97	F (L36)	1	24501565

cardiaco.com

330.	1–E15	0.206	COVER, ENG FRT (W/LOCATING PIN) (QTY 2)	95–97	F (L36)	1	24502241
331.	1–E16	0.207	GASKET, ENG FRT CVR	95–97	F (L36)	1	24502252
332.	1–E15	0.206	STUD, ENG FRT CVR (ALSO HOLDS CR/SHF SENSOR SHIELD) (5/16–18X3.1) (HEX W/65 OD X .06 THK WA, 5/16–18X3.07 W2.6 THD)	95–97	F (L36)	1	24504718
333.	1–E15	0.206	BOLT, ENG FRT CVR (5/16–18 UNC–2AX3.04)	95–97	F (L36)	3	24504712
334.	1–E15	0.206	BOLT, ENG FRT CVR (THRU ENG FRT CVR TO CYL BLK) (5/16–18 UNC–2AX1.50)	95–97	F (L36)	3	24504713
335.	1–E15	0.206	BOLT, ENG FRT CVR (W/WASHER ENG FRT CVR TO CYL BLK (HEX W/.65 OD FL WA, 5/16–18 X 3.07, FULL OR 1.0 THD, 300M, PO) (5/16–18 UNC–2AX3.04)	95–98	F (L36)	3	24504712
337.	1–L22	1.060	SEAL, DRV BELT TENSR (O–RING SEAL–0.799" ID, 0.1.03 X–SECT DIA, BLACK)	95–97	F (L36)	1	24502846

RPO DEFINITIONS
L36 – ENGINE GAS, 6 CYL, 3.8K MFI, V6, HO (ERV'6 SERIES)
M30 – TRANSMISSION,AUTOMATIC 4 SPEED,4L60E,ELECTRONIC

cardiagn.com

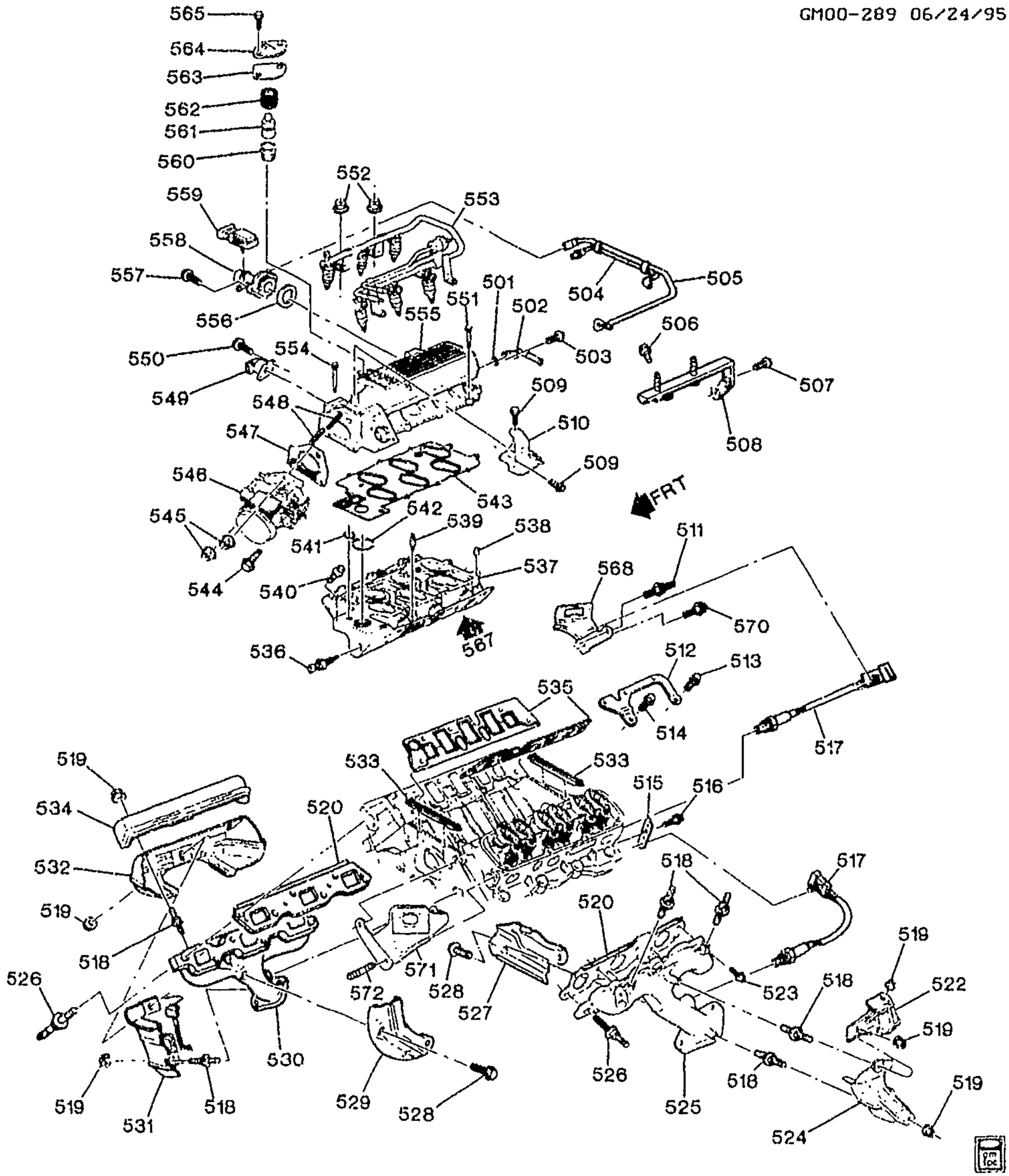

GM00-289F

1995-1998 F ENGINE ASM-3.8L V6 PART 5 MANIFOLDS & FUEL RELATED PARTS (L36/3.8K)

501.	1-N26	4.931	SEAL, P/B BOOS VAC PIPE (O RING)	95-98	F (L36)	1 24504812
502.	1-N26	4.930	PIPE, P/B BOOS VAC	95-98	F (L36)	1 24505522

cardiagn.com

503.	1-N26	4.931	BOLT, P/B BOOS VAC PIPE FLG (M6X1X10) (8.900)	95-98	F (L36)	1	11508567
504.	1-M28	3.330	TUBE, FUEL PRESS REG VAC	95-98	F (L36)	1	24503421
505.	1-M24	3.145	PIPE, EVAP EMIS CNSTR PURGE	95-97	F (L36, M30)	1	24505530
	1-M24	3.145	PIPE, EVAP EMIS CNSTR PURGE	96-97	F (L36, M49)	1	24505530
	1-M24	3.145	PIPE, EVAP EMIS CNSTR PURGE	98	F (L36)	1	24505605
506.	1-M12	2.383	BOLT, ELEK ICM BRKT BRKT (HFH M10X1.5X36, FULL THD, 10.9 PD *) (8.900)	93-98	F (L36)	1	24504922
507.		8.900	BOLT, HFH, M10X1.5X40, 26 THD, 10.9, POR (ELEK ICM BRKT BRKT)	95	F (L36)	2	14050422
		8.900	BOLT, HFH W/T50 INT TORX, 10X1.5X37.5, 35 THD W/6124M ADH 17.5 OD 10.9 , 7114M (ELEK ICM BRKT BRKT)	96-98	F (L36)	1	24504922
508.	1-M12	2.383	BRACKET, ELEK ICM BRKT (TO COIL PAC BRKT)	95-98	F (L36)	1	24505095
509.	1-N3	3.463	BOLT, ACCEL CONT CBL BRKT (TO THROTTLE BODY) (ACCEL CONT CBL BRKT) (M6X16) (9.8 7114M) (8.900)	95-98	F (L36)	2	11516398
510.	1-N3	3.454	BRACKET, ACCEL CONT CBL (A/TRANS TO THROT BODY)	95-98	F (L36, M30)	1	24505490
	1-N3	3.454	BRACKET, ACCEL CONT CBL (M/TRANS TO THROTTLE BODY)	95-98	F (L36, M49)	1	24505491
511.	1-E13	0.004	STUD, ENG LIFT RR BRKT	95-98	F (L36)	1	25534836
512.	1-M11	2.277	BRACKET, GEN BR	95-98	F (L36)	1	24505362
513.	1-M11	2.277	BOLT, GEN BR BRKT (M10 X 1.5 X 18.7) (CYL HD PLUG LFTR GALLERY)	95-98	F (L36)	1	24503068
514.	1-M11	2.277	BOLT, GEN BR BRKT (USE W/SEALER (12345493)) (HFH M10X1.5X36, FULL THD, 10.9 PD *) (8.900)	95-98	F (L36)	1	24504922
515.	1-M10	2.251	BRACKET, SPLG WIRE RET (ALSO HOLDS TWO SENSOR WIRES)	95-98	F (L36)	1	24503822
516.	1-M10	2.251	BOLT, SPLG WIRE RET BRKT (HFH, 10X1.5X20 W/7.8 DIA X7.5 LG DG PT, 11 THD, 20.8 OD) (2.042)	95-98	F (L36)	1	24503655
517.	1-N14	3.682	SENSOR, HTD OXY (AT EXHAUST MANIFOLDS) (AC-DELCO #AFS75)	95	F (L36)	2	25312184
	1-N14	3.682	SENSOR, HTD OXY (AT EXHAUST MANIFOLDS) (AC-DELCO #AFS75)	96	F (L36) (EXC ABN)	2	25312184
	1-N14	3.682	SENSOR, HTD OXY (AT EXHAUST MANIFOLDS) (EXC ABN) (AC-DELCO #AFS109)	96-97	F (L36) (EXC ABN)	2	25312203
	1-N14	3.682	SENSOR, HTD OXY (AT EXHAUST MANIFOLDS) (W/ ABN) (AC-DELCO #213-322)	96-97	F (L36)	2	25165116

cardiagn.com

	1-N14	3.682	SENSOR, HTD OXY (AT EXHAUST MANIFOLDS) (AC-DELCO #AFS109)	98	F (L36)	2	25312203
518.	1-N3	3.601	STUD, EXH MANIF H/SHLD (STRAIGHT, 6X1X7.8, 6X1X12 W/3.5 LG HEX DR, 21 OAL, 10.9, 7114M)	95	F (L36, M30)	4	24504892
	1-N3	3.601	STUD, EXH MANIF H/SHLD (3-LH & 4-RH) (6X1X7.8;6X1X12;7114M) (STRAIGHT, W/3.5 LG HEX DR, 21 OAL, 10.9)	95-98	F (L36)	7	24505437
519.	1-N4	3.602	NUT, EXH MANIF H/SHLD (ACORN HFH, 6X1X7.2, 14.2 OD, 9, 7111M.) (2.530)	95-98	F (L36)	7	24505611
520.	1-M26	3.272	GASKET, EXH MANIF (1-RH, 1-LH) (3.270)	95-98	F (L36)	2	24506009
522.	1-N4	3.602	SHIELD, EXH MANIF UPR HT ...	95-98	F (L36)	LH	24505423
523.	1-M26	3.275	BOLT, EXH MANIF (5/16-18X25.5)	95-96	F (L36)	1	24503271
	1-M26	3.275	STUD, EXH MANIF (USED IN PLACE OF BOLT AS REQUIRED) (PT, 8X1.2 14, 50 OAL,) (HFH, 5/16-18X28.5, 21.5 THD W/12MM OF 6149M ADH + 6 DIA X 5 LG)	96-98	F (L36)	1	24502332
524.	1-N4	3.602	SHIELD, EXH MANIF LWR HT ...	95-98	F (L36)	LH	24505037
525.	1-N3	3.601	MANIFOLD, EXH	95-98	F (L36)	LH	24506364
526.	1-M26	3.275	STUD, EXH MANIF (TO CYL HD) (PT, 8X1.2 14, 50 OAL,) (HFH, 5/16-18X28.5, 21.5 THD W/12MM OF 6149M ADH + 6 DIA X 5 LG)	95-98	F (L36)	8	24502332
527.	1-N4	3.602	SHIELD, EXH MANIF HT (INR LWR)	95-98	F (L36)	LH	24505031
528.	1-N4	3.602	BOLT, EXH MANIF H/SHLD (INR LWR SHIELD TO MANIF (4-LH & 4-RH)) (6X1X12.15)	95-98	F (L36)	8	24505098
529.	1-N4	3.602	SHIELD, EXH MANIF HT (INR LWR)	95-98	F (L36)	RH	24505030
530.	1-N3	3.601	MANIFOLD, EXH	95-98	F (L36)	RH	24505967
531.	1-N4	3.602	SHIELD, EXH MANIF UPR HT ...	95-98	F (L36)	RH	24505036
532.	1-N4	3.602	SHIELD, EXH MANIF UPR HT (OTR)	95-98	F (L36)	RH	24505034
533.		N.S.	SEAL, INT MANIF (*KIT3)		.....		
534.	1-N4	3.602	SHIELD, EXH MANIF UPR HT ...	95-98	F (L36)	RH	24505751
535.		N.S.	GASKET, INT MANIF (*KIT2, KIT3)		.....		
536.	1-L24	1.150	SENSOR, ENG COOL TEMP (W/ENG COOL T/GA SEN) (3 BLADE TERM) (W/IND SW) (3.682) (AC-DELCO #213-815)	95-98	F (L36)	1	10096161
537.	1-M25	3.265	MANIFOLD, LWR INT (INCL 501, 511, 512, 513, 514, 563)	95	F (L36, M30)	1	24505829
	1-M25	3.265	MANIFOLD, LWR INT (INCL 501, 511, 512, 513, 514, 563)	96-98	F (L36)	1	24505829

cardiagn.com

538.	1-M26	3.275	PIN, INT MANIF LOC (DOWELL PIN DIA-6.87, LENGTH-15.87, CHAM ENDS, STL) (3.342)	95-98	F (L36)	2	24500775
539.	1-M27	3.300	STUD, F/INJR (STRAIGHT, 6X1X30.4 FULL 6G THD 5.6 LG E5-6 TORX, 5.8, PO) (36MM TOT LENGTH)	95	F (L36, M30) (1ST DES)	4	24503945
	1-M27	3.300	STUD, F/INJR (30MM TOT LENGTH, USE WHEN 96 DES INT USED ON 95 L36 ENG)	95	F (L36, M30) (2ND DES)	4	24505733
	1-M27	3.300	STUD, F/INJR	96-98	F (L36)	4	24505733
540.		8.900	BOLT, HFH 5-16-18X1.25 280M POR .66 OD DIM A-94 (INT MANIF)	95-98	F (L36)	10	9440227
541.	1-M25	3.270	SEAL, INT MANIF (YELLOW) (3.337)	95-98	F (L36)	1	24501563
542.	1-M25	3.270	SEAL, INT MANIF	95-98	F (L36)	1	24503377
543.	1-M25	3.270	GASKET, INT MANIF (UPR TO LWR)	95-98	F (L36)	1	24504789
544.	1-N2	3.336	BOLT, THROT BODY (M6X1X36, 4.5 DOG PT) (25 THD, 15 O.D. HD, 10.9, 7114M, W/6124M ADHES) (3.275)	95-98	F (L36)	1	24506498
545.	1-N2	3.336	NUT, THROT BODY (ACORN HFH, 6X1X7.2, 14.2 OD, 9, 7111M.) (2.530)	95-98	F (L36)	2	24505611
546.	1-M28	3.335	BODY, THROT (AC-DELCO #24503386)	95-98	F (L36, M30)	1	24503386
	1-M28	3.335	BODY, THROT (14MM STUD CR/CONT CABLE, ATCH STUD ON ORIG THROT BODY) (AC-DELCO #24503387)	96-98	F (L36, M49)	1	24503387
547.	1-N2	3.336	GASKET, THROT BODY (AC-DELCO #40-747)	95-98	F (L36)	1	24503432
548.	1-N2	3.336	STUD, THROT BODY (M6X1.0X15.5)	95-98	F (L36)	2	24504462
549.	1-N19	3.320	VALVE, IDLE AIR CONT (AC-DELCO #217-427)	95-98	F (L36)	1	17112929
550.	1-N2	3.336	BOLT, IDLE AIR C/VLV	95-98	F (L36)	2	17090845
551.	1-M26	3.275	BOLT, INT MANIF (M6X1X36, 4.5 DOG PT) (25 THD, 15 O.D. HD, 10.9, 7114M, W/6124M ADHES) ..	95-96	F (L36)	8	24506498
552.	1-M27	3.300	NUT, F/INJR (ACORN HFH, 6X1X7.2, 14.2 OD, 9, 7111M.) (2.530)	95-98	F (L36)	4	24505611
553.		N.S.	INJECTOR, SEQ M/PORT FUEL (W/FUEL RL) (SEE "FUEL INJECTOR RAIL" ILLUSTRATION IN GRP 3 000 FOR DETAILED VIEW.)		.....		
554.	1-M26	3.275	BOLT, INT MANIF (M6X1X86.8 W/ADH)	95-98	F (L36)	1	24505205
555.	1-M25	3.265	MANIFOLD, UPR INT (INCL)	95-98	F (L36)	1	24505487
556.	1-M27	3.278	SEAL, VAC SCE MANIF (O RING) (0.984 ID W/.139 X-SECTION DIA, BLACK FC RUBBER) (W/TEFLON)	95-98	F (L36)	1	24503420
557.	1-M27	3.278	BOLT, VAC SCE HARN MANIF ...	95-98	F (L36)	1	24505038

cardiagn.com

558.	1-M27	3.278	MANIFOLD, VAC SCE	95-98	F (L36)	1	24503419
559.	1-N14	3.582	SENSOR, MAP (AC-DELCO #213-351)	95-98	F (L36)	1	16249939
560.	1-M4	1.745	SEAL, PCV VLV	95-98	F (L36)	1	25534756
561.	1-M4	1.745	VALVE, PCV (AC-DELCO #CV892C)	95-98	F (L36)	1	25043843
562.	1-M4	1.745	SPRING, PCV VLV	95-98	F (L36)	1	24500431
563.	1-M4	1.745	GASKET, PCV VLV CVR	95-98	F (L36)	1	24503777
564.	1-M4	1.745	COVER, PCV VLV	95-98	F (L36)	1	24504621
565.		8.900	BOLT, M6X1X16, 13.5 THD, 14.2 OD, 9.8, SN-ZN (PCV VLV CVR)	95-98	F (L36)	2	11517517
567.		8.800	LUBRICANT, ANTI-SEIZE (DRY FILM), 4 OZ., BRUSH TOP CAN (SEALER, OXY SEN HOLE)	95-98		AR	12377953
568.	1-E13	0.004	BRACKET, ENG LIFT (FRT)	95-98	F (L36)	RH	24503528
	1-E13	0.004	BRACKET, ENG LIFT (FRT)	95-98	F (L36)	LH	24508233
570.	1-E13	0.004	BOLT, ENG LIFT RR BRKT (HEX M10X1.5X20 9.8 PZOR 22 OD 18MM THD (T/W 12345493 ADHES) (8.900)	95-98	F (L36)	2	11508202
571.	1-E13	0.004	BRACKET, ENG LIFT (FRT)	95-98	F (L36)	RH	24503528
	1-E13	0.004	BRACKET, ENG LIFT (FRT)	95-98	F (L36)	LH	24508233
572.		8.915	NUT, HFH, 10X1.5 6H THD, 21.3 OD, 9.8 THK 13 HEX DR, GRD 9, ZF (EGR VLV ADAP) (8.917)	95-98	F (L36)	2	10255857

SERVICE KITS

2.	1-E16	0.289	GASKET KIT, CYL HD (LESS VLV SEALS)	95-96	F (L36)	1	12537615
	1-E16	0.289	GASKET KIT, CYL HD (LESS VLV SEALS) (INT-TO-BLK SEAL LESS 2 LOCATING PINS; 2ND DES SEE 12539095 (W/PINS))	97	F (L36) (1ST DES)	1	12537615
	1-E16	0.289	GASKET KIT, CYL HD (LESS VLV SEALS) (INT-TO-BLK SEAL HAS 2 LOCATING PINS; 1ST DES SEE 12537615 (LESS PINS))	97	F (L36) (2ND DES)	1	12539095
	1-E16	0.289	GASKET KIT, CYL HD (INT-TO-BLK SEAL HAS 2 LOCATING PINS) (LESS VLV SEALS)	98	F (L36)	1	12539095
3.	1-M25	3.270	GASKET KIT, INT MANIF	95-96	F (L36)	1	12537616
	1-M25	3.270	GASKET KIT, INT MANIF (INT-TO-BLK SEAL HAS 2 LOCATING PINS;1ST DES SEE 12537616 LESS PINS)	97	F (L36) (EXC ABN) (2ND DES)	1	12480831
	1-M25	3.270	GASKET KIT, INT MANIF (INT-TO-BLK SEAL LESS 2 LOCATING PINS;2ND DES SEE 12539096 W/PINS)	97	F (L36) (1ST DES)	1	12537616
	1-M25	3.270	GASKET KIT, INT MANIF	98	F (L36) (EXC ABN)	1	12480831

RPO DEFINITIONS

ABN - SENSOR OXYGEN NON-HEATED
L36 - ENGINE GAS, 6 CYL, 3.8K, MFI, V6, HO (ERV6 SERIES)
M30 - TRANSMISSION,AUTOMATIC 4 SPEED,4L60E,ELECTRONIC
M49 - TRANSMISSION MAN 5 SPD, BORG WARNER, 77MM, 3.75 1ST, .76 5TH, O/D

cardiagn.com

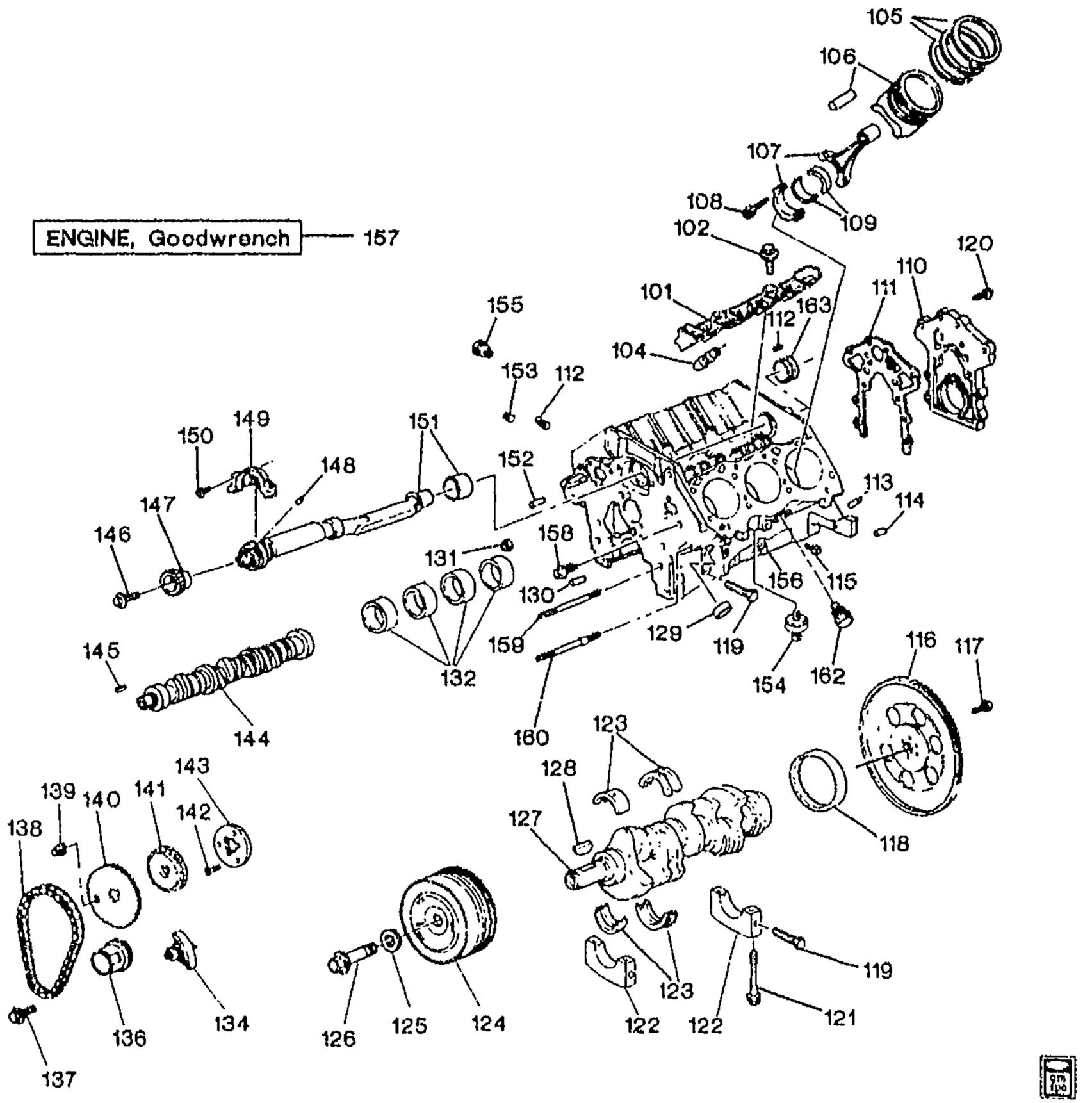

GM00-285F

1995-2002 F ENGINE ASM-3.8L V6 PART 1 CYLINDER BLOCK AND RELATED PARTS (L36/3.8K)

101.	1-E19	0.439	GUIDE, VLV LFTR	95-02	F (L36)	2	24502195
102.	1-E19	0.459	BOLT, VLV LFTR GDE (5/16-18 X 5/8)	95-02	F (L36)	4	24501042
104.	1-E19	0.459	LIFTER, VLV (ROLLER) (HYDRAULIC) (AC-DELCO #HL119)	95-97	F (L36)	12	17121905
	1-E19	0.459	LIFTER, VLV (ROLLER) (HYDRAULIC) (AC-DELCO #HL119) (W/STEEL PUSHROD SEAT) (2ND DESIGN SEE 17122490)	98	F (L36) (1ST DES)	12	17121905

cardiagn.com

	1-E19	0.459	LIFTER, VLV (AC-DELCO #HL124) (W/BLUE PUSHROD SEAT) (1ST DESIGN SEE 17121905)	98	F (L36) (2ND DES)	12	17122490
	1-E19	0.459	LIFTER, VLV (AC-DELCO #HL124)	99-02	F (L36)	12	17122490
105.	1-E21	0.643	RING KIT, PSTN (ALSO PART OF 157) (STD)	95-98	F (L36)	6	12537410
	1-E21	0.643	RING KIT, PSTN (ALSO PART OF 157) (0.020 O.S.)	95-98	F (L36)	6	12537411
	1-E21	0.643	RING KIT, PSTN (ALSO PART OF 157) (STD)	99-02	F (L36)	6	12480825
	1-E21	0.643	RING KIT, PSTN (ALSO PART OF 157) (0.020 O.S.)	99-02	F (L36)	6	12480826
106.	1-E21	0.629	PISTON, (W/PIN) (ALSO PART OF 157) (0.020 O.S.) (W/ PIN & RET)	95-02	F (L36)	6	12537409
	1-E21	0.629	PISTON, (W/PIN) (STD) (ALSO PART OF 157) (W/PIN & RET)	95-02	F (L36)	6	12537408
107.	1-E20	0.603	ROD, CONN (INCL 108) (ALSO PART OF 157)	95-02	F (L36)	6	12569110
108.	1-E20	0.623	BOLT, CONN ROD (3/8-24X1.68) (ALSO PART OF 107 & 157) (0.659)	95-02	F (L36)	12	25531956
109.	1-E20	0.616	BEARING KIT, CONN ROD (ALSO PART OF 157) (.0008" U.S.)	95-99	F (L36)	6	12537419
	1-E20	0.616	BEARING KIT, CONN ROD (STD) (ALSO PART OF 157)	95-02	F (L36)	6	12480819
110.	1-E15	0.137	HOUSING, CR/SHF RR OIL SEAL	95-02	F (L36)	1	24507386
111.	1-E15	0.137	GASKET, CR/SHF RR OIL SEAL HSG	95-02	F (L36)	1	24507388
112.		8.971	PLUG, AUTO HEX SOC DRN, 1/4 PTF-SAE SHORT (ENG BLK OIL GAL) (8.921)	95-02		3	444777
113.	1-E17	0.293	PIN, CYL HD LOC	95-02	F (L36)	4	25536320
114.	1-E23	0.685	PIN, FLYWHL HSG LOC (TO CYL BLK) (19.5 MM X 18.5 MM)	95-02	F (L36, M30)	2	12338076
115.	1-E14	0.034	PLUG, ENG BLK COOL DRN HOLE (10.16 O.D X 4.95 LG)	95-02	F (L36)	2	24504119
116.	1-E22	0.666	FLYWHEEL, ENG	95-02	F (L36, M30)	1	24506808
	1-E22	0.666	FLYWHEEL, ENG	96-02	F (L36, M49)	1	24503285
117.	1-E22	0.669	BOLT, FLYWHL (TO CR/SHF) (HEX, 5/16-18X.635, CLASS 3A, 0.492 THD, 300M PC, MACH) (8.900)	95-02	F (L36, M30)	8	24501365
	1-E22	0.669	BOLT, FLYWHL (TO CR/SHFT)	96-02	F (L36, M49)	8	24505092
118.	1-E15	0.137	SEAL, CR/SHF RR OIL (LIP SEAL)	95-02	F (L36)	1	25534760
119.	1-E14	0.056	BOLT, CR/SHF BRG CAP (HORIZONTAL INSTALLATION) (HFH, 8X1.25X47.8, 44.7 THD, 17OD, 9.8 32-38 RC, GM7114M)	95-01	F (L36)	6	24505576
	1-E14	0.056	BOLT, CR/SHF BRG CAP (HORIZONTAL INSTALLATION) (HFH, 8X1.25X47.8, 44.7 THD, 17OD, 9.8 32-38 RC, GM7114M)	02	F (L36)	6	24505576

cardiagn.com

120.	1-E15	0.137	BOLT, CR/SHF RR OIL SEAL HSG (HFH, 8X1.25X29.4 W/6.15 DIA X 6 LG PT, 2.14 THD, 17 OD, 8.8, P.O.)	95-02	F (L36)	12	24503970
121.	1-E14	0.056	BOLT, CR/SHF BRG CAP (VERTICAL INSTALLATION) (HFH, 7/16-14X3.6, 2.3 THD, .39 OD BODY, .434 DIA BODY, .83 OD, 300M)	95-01	F (L36)	8	24503056
	1-E14	0.056	BOLT, CR/SHF BRG CAP (VERTICAL INSTALLATION) (HFH, 7/16-14X3.6, 2.3 THD, .39 OD BODY, .434 DIA BODY, .83 OD, 300M)	02	F (L36)	8	24503056
122.		N.S.	CAP, CR/SHF BRG (ALSO PART OF 156 & 157)				
123.	1-E15	0.096	BEARING KIT, CR/SHF (ALSO PART OF 157) (#4) (STD)	95-02	F (L36)	1	12480823
	1-E15	0.096	BEARING KIT, CR/SHF (ALSO PART OF 157) (#3) (STD)	99-02	F (L36)	1	12480822
	1-E15	0.096	BEARING KIT, CR/SHF (#1) (.001"U.S.) (ALSO PART OF 157)	95-02	F (L36)	1	12537032
	1-E15	0.096	BEARING KIT, CR/SHF (#1) (STD) (ALSO PART OF 157)	95-02	F (L36)	1	12480820
	1-E15	0.096	BEARING KIT, CR/SHF (#1) (STD) (ALSO PART OF 157)	95-96	F (L36)	1	12537031
	1-E15	0.096	BEARING KIT, CR/SHF (#2) (.001"U.S.) (ALSO PART OF 157)	95-02	F (L36)	1	12482036
	1-E15	0.096	BEARING KIT, CR/SHF (#2) (STD) (ALSO PART OF 157)	95-02	F (L36)	1	12480821
	1-E15	0.096	BEARING KIT, CR/SHF (#3) (.001"U.S.) (ALSO PART OF 157) (0.026MM U.S.) (POS #3)	95-02	F (L36)	6	12482037
	1-E15	0.096	BEARING KIT, CR/SHF (#3) (STD) (ALSO PART OF 157)	95-98	F (L36)	1	18017988
	1-E15	0.096	BEARING KIT, CR/SHF (#4) (.001"U.S.) (ALSO PART OF 157)	95-02	F (L36)	1	12537173
124.	1-E21	0.659	BALANCER, CR/SHF	95	F (L36)	1	12563267
	1-E21	0.659	BALANCER, CR/SHF	96-97	F (L36, M30)	1	12563267
	1-E21	0.659	BALANCER, CR/SHF	96	F (L36, M49)	1	12563267
	1-E21	0.659	BALANCER, CR/SHF	97	F (L36, M49)	1	12563281
	1-E21	0.659	BALANCER, CR/SHF	98-02	F (L36)	1	12563281
125.		N.S.	WASHER, CR/SHF BALR (PART OF 126)				
126.	1-E22	0.662	BOLT, CR/SHF BALR (HFH, 3/4-16X3, 1.6 THD, .74 DIA) ("WASHER (REF 24500082) IS NOT REQUIRED WHEN USING THIS BOLT.)	95-97	F (L36, M30)	1	24504736
	1-E22	0.662	BOLT, CR/SHF BALR (HFH, 3/4-16X3, 1.6 THD, .74 DIA)	96	F (L36, M49)	1	24504736
	1-E22	0.662	BOLT, CR/SHF BALR	97-99	F (L36, M49)	1	24506341
	1-E22	0.662	BOLT, CR/SHF BALR	00-02	F (L36)	1	24506341
127.	1-E21	0.646	CRANKSHAFT, (MCHG) (ALSO PART OF 157)	95-02	F (L36)	1	24502168
128.	1-E22	0.662	KEY, CR/SHF BALR	95-00	F (L36)	1	25534912
	1-E22	0.662	KEY, CR/SHF BALR	01-02	F (L36)	1	12563282

cardiagn.com

129.	1-E14	0.034	PLUG, ENG BLK CORE HOLE (CUP, 1.5 X .058, BRASS) (.003 OVERSIZE)	95-97	F (L36)	AR	24501422
	1-E14	0.034	PLUG, ENG BLK CORE HOLE (CUP DIA 1.5") (STAINLESS STEEL)	95-02	F (L36)	4	24500867
130.	1-E15	0.206	PIN, ENG FRT CVR LOC (DWL 1/4X1 3/8) (STEEL) (CHAMFERED ENDS) (LOWER) (1/4 X 1-3/8", STEEL) (CHAMFERED ENDS) (8.939)	95-01	F (L36)	1	25536323
	1-E15	0.206	PIN, ENG FRT CVR LOC (DWL 1/4X1 3/8) (STEEL) (CHAMFERED ENDS) (LOWER) (1/4 X 1-3/8", STEEL) (CHAMFERED ENDS) (8.939)	02	F (L36)	1	25536323
131.		8.970	PLUG, SPECIAL FRT OIL GALLERY DIA .587 (ENG BLK OIL GAL)	95-02		2	3835577
132.	1-E20	0.539	BEARING, CM/SHF (ALSO PART OF 157) (POS #1, #4)	95-02	F (L36)	2	24504546
	1-E20	0.539	BEARING, CM/SHF (ALSO PART OF 157) (POS #2, #3)	95-02	F (L36)	2	24504547
134.	1-E23	0.724	DAMPENER, TMG CHAIN (INCLS BOLT, RET RING)	95-02	F (L36)	1	24503893
136.	1-E23	0.728	SPROCKET, CR/SHF (24 TEETH)	95-02	F (L36)	1	24502431
137.	1-E24	0.738	BOLT, CM/SHF SPKT (ALSO HOLDS BAL SHF GEAR) (HEX W/WASHER, 1/2-20X1.64 FULL THD, 1.25 OD, 300M, PC, MACH) (0.659)	95-02	F (L36)	1	24501366
138.	1-E23	0.724	CHAIN, CM/SHF TMG	95-02	F (L36)	1	24504668
139.	1-M12	2.383	MAGNET, CM/SHF POSN SEN	95-02	F (L36)	1	10456195
	1-E23	0.736	MAGNET, CM/SHF POSN SEN (2.383)	95-02	F (L36)	1	10456195
140.	1-E23	0.736	SPROCKET, CM/SHF (48 TEETH)	95-02	F (L36)	1	24505306
141.	1-E21	0.659	GEAR, BALR SHF DRV	95-02	F (L36)	1	24504792
142.	1-E20	0.533	BOLT, CM/SHF THR PLT (1/4-20X.88 280/275 OPT PZOR) (1.723)	95-02	F (L36)	2	25519242
143.	1-E20	0.533	PLATE, CM/SHF THR	95-02	F (L36)	1	24502801
144.	1-E20	0.519	CAMSHAFT,	95-97	F (L36)	1	24505811
	1-E20	0.519	CAMSHAFT,	99-02	F (L36)	1	24505811
	1-E20	0.519	CAMSHAFT, (USE W/LIFTERS W/GRAY PUSHROD SEAT)	98	F (L36)	1	24505811
145.	1-E20	0.529	KEY, CM/SHF SPKT	95-02	F (L36)	1	24500618
146.	1-E21	0.659	BOLT, BAL SHF GR (HEX W/WA, 3/16-16X1.15, CLASS 3A, FULL THD, 1.24 OD, 300M, PC, MACH)	95-02	F (L36)	1	24501367
147.	1-E21	0.659	GEAR, BALR SHF (DRIVEN)	95-02	F (L36)	1	24503524
148.		N.S.	PIN, BALR SHF GR (PART OF 151)				
149.	1-E21	0.659	RETAINER, BALR SHF	95-02	F (L36)	1	24500374
150.	1-E21	0.659	BOLT, BAL SHF RET (W/FLAT WASH 5/16-18X.855, 300M, ZP)	95-02	F (L36)	2	24500055
	1-E21	0.659	BOLT, BAL SHF RET (W/FLAT WASH 5/16-18X.855, 300M, ZP)	95-02	F (L36)	2	24500055

cardiagn.com

151.	1-E21	0.659	SHAFT, BAL (INCL 148) (ALSO PART OF 157) (INCL FRT BEARING & PIN)	95-02	F (L36)	1	24506557
152.	1-E15	0.206	PIN, ENG FRT CVR LOC (UPPER) (DWL PIN, 0.25X0.875, STL, PL, CHAMFERED ENDS)	95-01	F (L36)	1	24501162
	1-E15	0.206	PIN, ENG FRT CVR LOC (UPPER) (DWL PIN, 0.25X0.875, STL, PL, CHAMFERED ENDS)	02	F (L36)	1	24501162
153.		8.971	PLUG, HEX SOC, .250-18, .69 LNG, PC, DOG PT (KNOCK SEN HOLE)	95-02	.....	1	12338136
154.	1-M12	2.383	SENSOR, KNOCK (AC-DELCO #213-274)	95	F (L36)	2	10456205
	1-M12	2.383	SENSOR, KNOCK (AC-DELCO #213-297)	96-02	F (L36)	2	10456215
155.	1-L25	1.152	HEATER, ENG COOL	95-02	F (L36, K05)	1	24503486
156.		N.S.	BLOCK, ENG (INCL 122) (ALSO PART OF 157)		.....		
157.	1-E12	0.000 A	ENGINE, GASOLINE (GOODWRENCH) (NEW) (REFER TO CATLG GRP NOTE #1 FOR CONTENTS) (INCLS 105, 106, 107, 108, 109, 122, 123, 127, 132, 151, 156)	99-02	F (L36)	1	12480889
	1-E12	0.000 A	ENGINE, GASOLINE (GOODWRENCH) (NEW) (REFER TO NOTE #1 IN CATLG TEXT; ENG IS 1998 AUTO TRANS, FOR ALL OTHER APPL. USE NEW FLYWHL, CR/SHF BALANCER & PILOT BUSHING.) (INCLS 105, 106, 107, 108, 109, 122, 123, 127, 132, 151, 156)	95-97	F (L36)	1	12371992
	1-E12	0.000 A	ENGINE, GASOLINE (GOODWRENCH) (NEW) (REFER TO NOTE #1 IN CATLG TEXT; ENG IS 1998 AUTO TRANS, FOR ALL OTHER APPL. USE NEW FLYWHL, CR/SHF BALANCER & PILOT BUSHING) (INCLS 105, 106, 107, 108, 109, 122, 123, 127, 132, 151, 156)	98	F (L36)	1	12371992
158.	1-E14	0.034	PLUG, CYL AND CASE WAT JKT (W/ADH, 8X1.25X12, 10.5 THD W/6MM OF 6124M ADH, 17.6 OD, 9.8, PC)	95-01	F (L36) (/)	1	24503702
159.	1-N27	6.606	STUD, P/S PUMP (STRAIGHT, 10X1.5X21 THD + 6 DG, 8X1.25X12 + 5.5 HEX DR, 101 OAL, 10.9, PO)	95-01	F (L36)	1	24504987
	1-N27	6.606	STUD, P/S PUMP (STRAIGHT, 10X1.5X21 THD + 6 DG, 8X1.25X12 + 5.5 HEX DR, 101 OAL, 10.9, PO)	02	F (L36)	1	24504987

cardiagn.com

160.		DISCON	**STUD**, P/S PUMP (STRAIGHT W/8 DIA SHLDR, 8X1.25X19 W/DG PT 17 THD & 7MM OF 9985490 SEALANT, 8X1.25X25 W/5.5 HEX DRIVE & 19.5 THD, 86 OAL, 10.9, ZF)	95	F (L36)	1	24503422
	1-N27	6.606	**STUD**, P/S PUMP (STRAIGHT W/8 DIA SHLDR, 8X1.25X19 W/DG PT 17 THD & 7MM OF 9985490 SEALANT, 8X1.25X25 W/5.5 HEX DRIVE & 19.5 THD, 86 OAL, 10.9, ZF)	95	F (L36)	1	24503245
	1-N27	6.606	**STUD**, P/S PUMP (STRAIGHT W/8 DIA SHLDR 8X1.25X19 W/DG PT 17 THD & 7MM OF 9985490 SEALANT, 8X1.25X25 W/5.5 HEX DRIVE & 19.5 THD, 86 OAL, 10.9, ZF)	96-01	F (L36)	1	24503245
	1-N27	6.606	**STUD**, P/S PUMP (LFT SI LWR MTG HOLE) (STRAIGHT W/8 DIA SHLDR, 8X1.25X19 W/DG PT 17 THD & 7MM OF 9985490 SEALANT, 8X1.25X25 W/5.5 HEX DRIVE & 19.5 THD, 86 OAL, 10.9, ZF)	95-02	F (L36)	1	24504987
	1-N27	6.606	**STUD**, P/S PUMP (RT SI UPR MTG HOLE) (STRAIGHT W/8 DIA SHLDR, 8X1.25X19 W/DG PT 17 THD & 7MM OF 9985490 SEALANT, 8X1.25X25 W/5.5 HEX DRIVE & 19.5 THD, 86 OAL, 10.9, ZF)	95-02	F (L36)	1	24503245
162.	1-E14	0.034	**PLUG**, ENG BLK COOL DRN HOLE (10.16 O.D X 4.95 LG)	95-02	F (L36)	2	24504119
163.	1-E20	0.536	**BEARING**, BALR SHF RR	95-02	F (L36)	1	24503193

RPO DEFINITIONS

K05 – HEATER,ENGINE BLOCK
L36 – ENGINE GAS, 6 CYL, 3.8K, MFI, V6, HO (ERV6 SERIES)
M30 – TRANSMISSION,AUTOMATIC 4 SPEED,4L60E,ELECTRONIC
M49 – TRANSMISSION MAN 5 SPD, BORG WARNER, 77MM, 3.75 1ST, .76 5TH, O/D

cardiagn.com

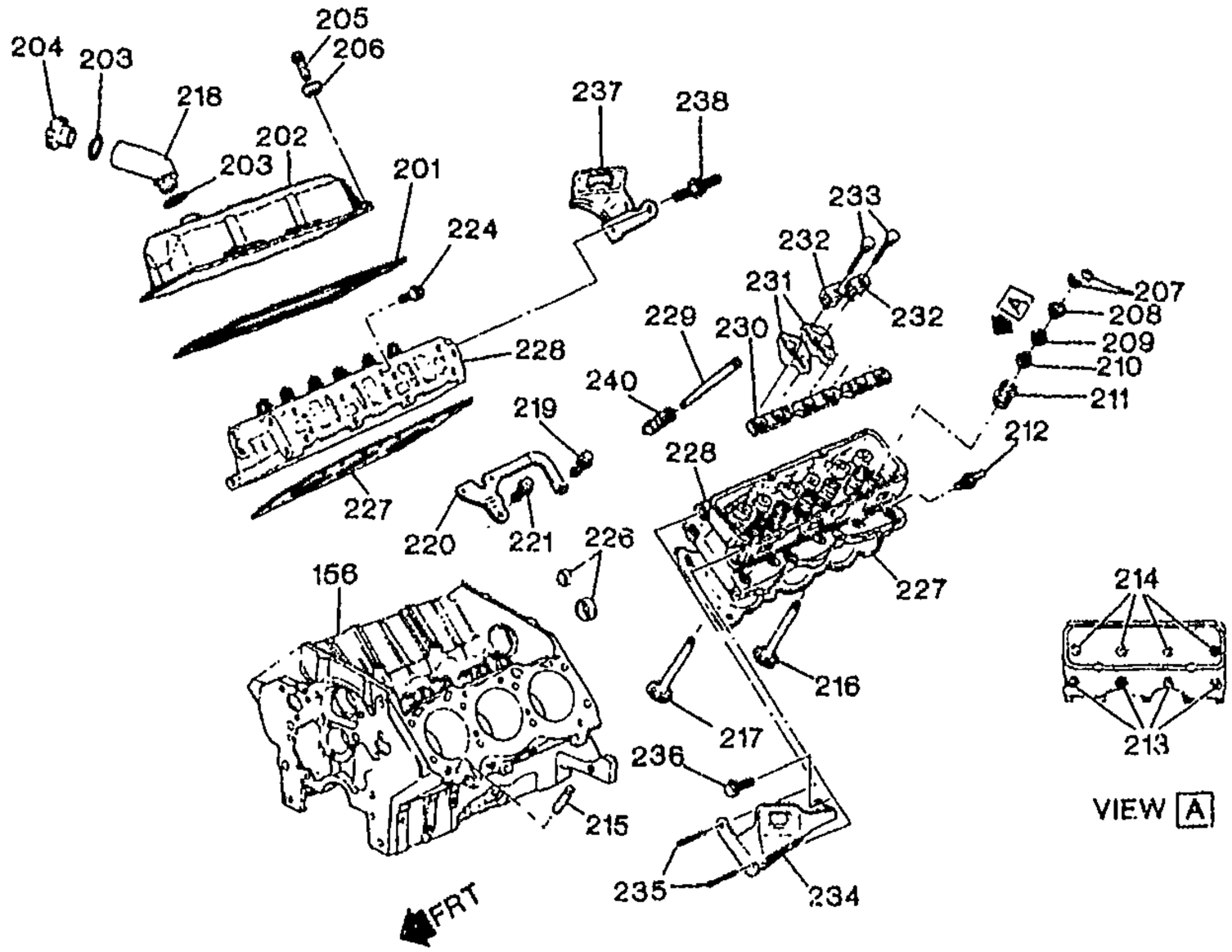

GM00-286F

1995-2002 F ENGINE ASM-3.8L V6 PART 2 CYLINDER HEAD AND RELATED PARTS (L36/3.8K)

156.		N.S.	BLOCK, ENG				
201.	1-E19	0.423	GASKET, VLV RKR ARM CVR (*KIT1)	95-02	F (L36)	2	25532619
202.	1-E18	0.366	COVER, VLV RKR ARM	95-02	F (L36)	RH	24505359
	1-E18	0.386	COVER, VLV RKR ARM	95-02	F (L36)	LH	24505361
203.	1-M4	1.758	SEAL, OIL FIL CAP (O RING) (ALSO PART OF 204) (27 29/32 ID W/5 5/16 DIA X-SECTION) (SIZE #320) (1.745)	95-02	F (L36)	1	24100002
204.	1-M4	1.758	CAP, OIL FIL (W/SEAL) (INCL 203) (SAE 10W-30) (AC-DELCO #FC176)	95-02	F (L36)	1	24504599
205.	1-E18	0.413	BOLT, VLV RKR ARM CVR (W/WASHER TO CYL HD (HWH, 1/4-20X1.0 W/DOG PT/.85 OD SPL BODY WA, 6010M, PO 6174M)) (W/WASHER)	95-02	F (L36)	12	24502164
206.	1-E18	0.413	GROMMET, VLV RKR ARM CVR BOLT	95-02	F (L36)	12	25534749
207.	1-E18	0.310	KEY, VLV STEM	95-02	F (L36)	24	10166345
208.	1-E18	0.309	CAP, VLV SPR (ALSO PART OF 211)	95-02	F (L36)	12	24502257
209.	1-E18	0.308	SEAL, INT VLV STEM OIL (STD)	95-97	F (L36)	6	24502713

cardiagn.com

	1-E18	0.308	SEAL, INT VLV STEM OIL (W/ SILVER METAL BAND) (0.015 O/S)	95-00	F (L36)	6	24508663
	1-E18	0.308	SEAL, INT VLV STEM OIL (STD)	98-02	F (L36)	6	24507690
210.	1-E18	0.308	SEAL, EXH VLV STEM OIL (W/ BRONZE METAL BAND) (0.015 O/S)	95-00	F (L36)	6	24508664
	1-E18	0.308	SEAL, EXH VLV STEM OIL (STD)	95-02	F (L36)	6	24507691
211.	1-E17	0.303	SPRING KIT, VLV (INCL 208) (W/CAP)	95-97	F (L36)	12	12537174
	1-E17	0.303	SPRING KIT, VLV (INCL 208) (W/CAP) (W/SPRING COILED IN COUNTER CLOCKWISE DIRECTION) (FOR 2ND DES SEE 12480244)	98	F (L36) (1ST DES)	12	12537174
	1-E17	0.303	SPRING KIT, VLV (INCL 208) (W/CAP)	99-02	F (L36)	12	12537174
212.	1-M11	2.270	SPARK PLUG, (AC-DELCO #41-606)	95	F (L36)	6	5614303
	1-M11	2.270	SPARK PLUG, (AC-DELCO #41-921)	96-02	F (L36)	6	25161444
	1-M11	2.270	SPARK PLUG, (AC-DELCO #14)	96-02	F (L36)	AR	25332828
	1-M11	2.270	SPARK PLUG, (AC-DELCO #41-101)	02	F (L36)	6	12568387
213.	1-E17	0.293	BOLT, CYL HD (TO CYL BLK INR ROW CTR END-OTR ROW CTR) (7/16-14X2.34") (OUTER)	95-01	F (L36)	8	25533811
	1-E17	0.293	BOLT, CYL HD (TO CYL BLK INR ROW CTR END-OTR ROW CTR) (7/16-14X2.34") (OUTER)	02	F (L36)	8	25533811
214.	1-E17	0.293	BOLT, CYL HD (UPR CTR) (7/16-14X3.24")	95-01	F (L36)	4	25527831
	1-E17	0.293	BOLT, CYL HD (UPR CTR) (7/16-14X3.24")	02	F (L36)	4	25527831
215.	1-E17	0.293	PIN, CYL HD LOC (LWR ROW) (DWL 1/4X9X9/16)	95-01	F (L36)	4	25536320
	1-E17	0.293	PIN, CYL HD LOC (LWR ROW) (DWL 1/4X9X9/16)	02	F (L36)	4	25536320
216.	1-E17	0.296	VALVE, INT (.010 O.S.)	95-98	F (L36)	6	24504740
	1-E17	0.296	VALVE, INT (STD)	95-02	F (L36)	6	24507422
	1-E17	0.296	VALVE, INT (0.015 O.S.)	99-02	F (L36)	6	24508014
217.	1-E17	0.297	VALVE, EXH (STD)	95-02	F (L36)	6	24507423
	1-E17	0.297	VALVE, EXH (0.015 O.S.)	95-02	F (L36)	6	24508015
218.	1-M4	1.745	TUBE, OIL FIL (TO OIL FILL CAP)	95-02	F (L36)	1	24503429
219.	1-M11	2.277	BOLT, GEN BR BRKT (M10 X 1.5 X 18.7) (CYL HD PLUG LFTR GALLERY)	95-01	F (L36)	1	24503068
	1-M11	2.277	BOLT, GEN BR BRKT (M10 X 1.5 X 18.7) (CYL HD PLUG LFTR GALLERY)	02	F (L36)	1	24503068
220.	1-M11	2.277	BRACKET, GEN BR	95-99	F (L36)	1	24505362
	1-M11	2.277	BRACKET, GEN BR	00-02	F (L36)	1	24508924
221.		8.900	BOLT, HFH W/T50 INT TORX, 10X1.5X37.5, 35 THD W/6124M ADH 17.5 OD 10.9 , 7114M (GEN BR BRKT)	95-02		1	24504922

cardiagn.com

224.	1-E17	0.293	PLUG, CYL HD (T50 TORX DR, 9.8, PC) (FLAT HD, 10X1.5X17.6, 15.16G THD W/10MM, 16.5 ODX6.5 THK HD W/)	95-01	F (L36)	1	24503404
	1-E17	0.293	PLUG, CYL HD (T50 TORX DR, 9.8, PC) (FLAT HD, 10X1.5X17.6, 15.16G THD W/10MM, 16.5 ODX6.5 THK HD W/)	02	F (L36)	1	24503404
226.		8.970	PLUG, EXPANSION PLUG CUP SHAPE 1" STEEL (ALSO PART OF 228) (CUP , 1.014 OD, .320 THK, FROM .050 THK CORROSIN RESISTANT STEEL.) (0.293)	95-02		2	24502262
227.		N.S.	GASKET, CYL HD (*KIT1)				
228.	1-E16	0.269	HEAD, CYL (INCL 226) (VLV SPR SEAT PILOT DIA 0.810" REPL OLD DES 0.855")	95-02	F (L36)	2	24508132
229.	1-E19	0.426	ROD, VLV PUSH (7.053 INCHES) (RED I.D.)	95-02	F (L36)	12	24504406
230.	1-E18	0.334	RETAINER, VLV RKR ARM BRG	95-02	F (L36)	2	24502278
231.	1-E18	0.333	ARM, VLV RKR (W/PIVOT)	95-02	F (L36)	12	24503999
232.		N.S.	BEARING, VLV RKR ARM (PART OF ITEM # 231 ONLY)				
233.	1-E19	0.429	BOLT, VLV RKR ARM PIV (5/16-18X2.03, 0.550 OD, 1.89 THD)	95-02	F (L36)	12	24503515
234.	1-E13	0.004	BRACKET, ENG LIFT (FRT)	95-02	F (L36)	RH	24503528
	1-E13	0.004	BRACKET, ENG LIFT (FRT)	95-02	F (L36)	LH	24508233
235.	1-N11	3.671	STUD, EGR VLV ADAP (ONLY TO EGR ADAPT) (STRAIGHT, M8X1.25X16, M8X1.25X16, 36 TL, 9.8, PC.)	95-99	F (L36)	3	24501688
	1-N11	3.671	STUD, EGR VLV ADAP	95-02	F (L36)	2	24504213
236.		8.900	BOLT, M8X1.25X25 9.8 (ENG LIFT FRT BRKT)	95-02	F	1	11508476
237.	1-E13	0.004	BRACKET, ENG LIFT (FRT)	95-02	F (L36)	RH	24503528
	1-E13	0.004	BRACKET, ENG LIFT (FRT)	95-02	F (L36)	LH	24508233
238.	1-E13	0.004	STUD, ENG LIFT RR BRKT	95-02	F (L36)	1	25534836
240.	1-E19	0.459	LIFTER, VLV (ROLLER) (HYDRAULIC) (AC-DELCO #HL119)	95-97	F (L36)	12	17121905
	1-E19	0.459	LIFTER, VLV (ROLLER) (HYDRAULIC) (AC-DELCO #HL119) (W/STEEL PUSHROD SEAT) (2ND DESIGN SEE 17122490)	98	F (L36) (1ST DES)	12	17121905
	1-E19	0.459	LIFTER, VLV (AC-DELCO #HL124) (W/BLUE PUSHROD SEAT) (1ST DESIGN SEE 17121905)	98	F (L36) (2ND DES)	12	17122490
	1-E19	0.459	LIFTER, VLV (AC-DELCO #HL124)	99-02	F (L36)	12	17122490

cardiagn.com

SERVICE KITS

1.	1–E16	0.289	GASKET KIT, CYL HD (INCL 201, 227) (KIT ALSO INCL GASKETS FOR CYL HD, INT MANIF, VLV RKR, SEAL–INT MANIF)	95–96	F (L36)	1	12537615
	1–E16	0.289	GASKET KIT, CYL HD (INCL 201, 227) (KIT ALSO INCL GASKETS FOR CYL HD, INT MANIF, VLV RKR, SEAL–INT MANIF) (INT–TO–BLK SEAL LESS 2 LOCATING PINS; 2ND DES SEE 12539095 (W/PINS))	97	F (L36) (1ST DES)	1	12537615
	1–E16	0.289	GASKET KIT, CYL HD (INCL 201, 227) (KIT ALSO INCL GASKETS FOR CYL HD, INT MANIF, VLV RKR, SEAL–INT MANIF) (INT–TO–BLK SEAL HAS 2 LOCATING PINS; 1ST DES SEE 12537615 (LESS PINS))	97	F (L36) (2ND DES)	1	12539095
	1–E16	0.289	GASKET KIT, CYL HD (INT–TO–BLK SEAL HAS 2 LOCATING PINS) (INCL 201, 227) (KIT ALSO INCL GASKETS FOR CYL HD, INT MANIF, VLV RKR, SEAL–INT MANIF)	98–02	F (L36)	1	12539095

RPO DEFINITIONS

L36 – ENGINE GAS, 6 CYL, 3.8K, MFI, V6, HO (ERV6 SERIES)

cardiagn.com

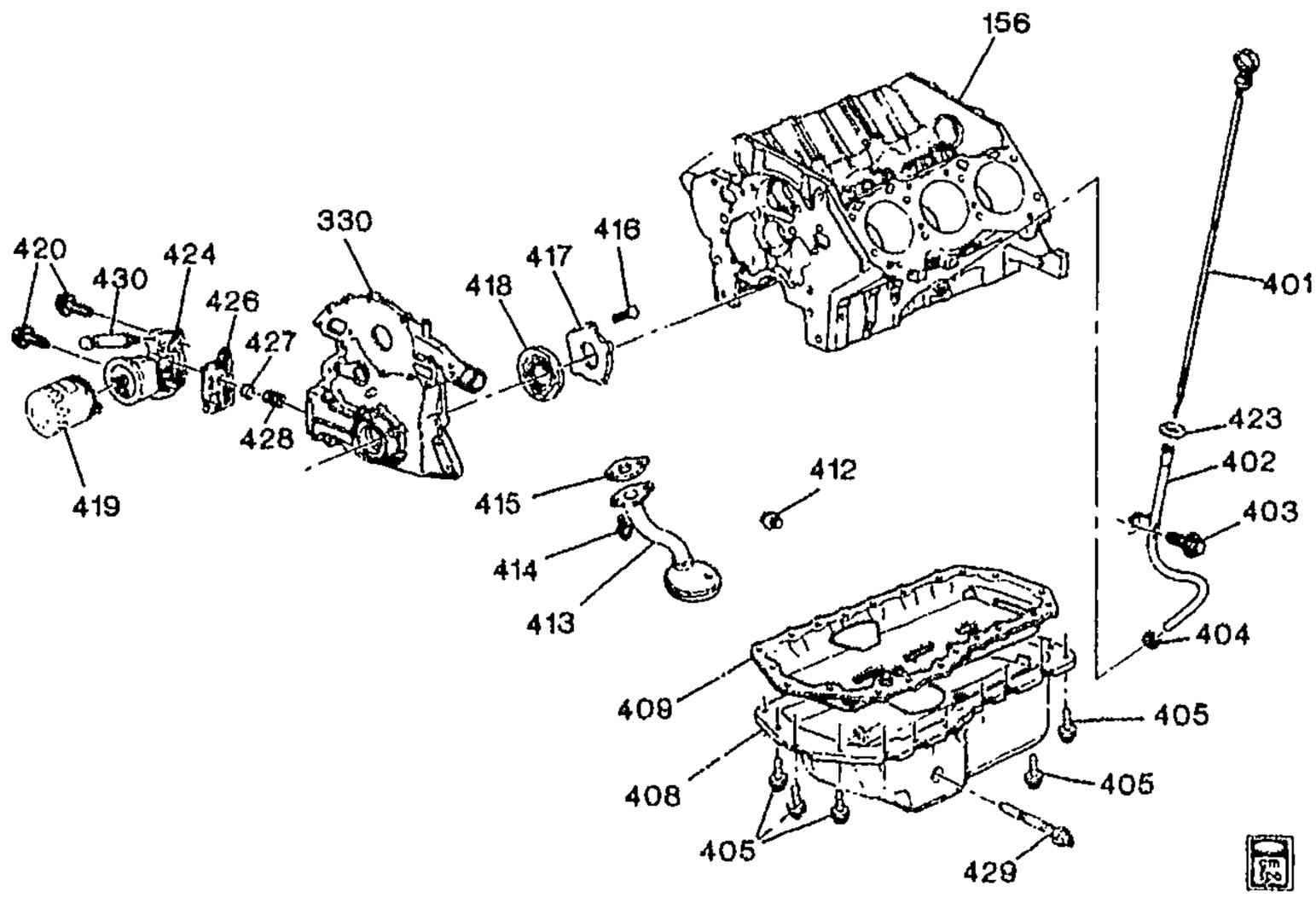

GM00-288F

1995-2002 F ENGINE ASM-3.8L V6 PART 4 OIL PUMP,PAN AND RELATED PARTS (L36/3.8K)

156.		N.S.	BLOCK, ENG				
330.	1-E15	0.206	COVER, ENG FRT (W/LOCATING PIN) (QTY 2)	95-02	F (L36)	1	24502241
401.	1-L27	1.516	INDICATOR, OIL LVL (INCL 404)	95-99	F (L36)	1	24505407
	1-L27	1.516	INDICATOR, OIL LVL (INCL 404)	00-02	F (L36)	1	24507730
402.	1-L27	1.516	TUBE, OIL LVL IND (INCL 404)	95-99	F (L36)	1	12564961
	1-L27	1.516	TUBE, OIL LVL IND (INCL 404)	00-02	F (L36)	1	12563333
403.	1-L27	1.516	BOLT, OIL LVL IND TUBE (HEX FLG HD M6X1X16X9.8 PC) (9.764)	95-96	F (L36)	4	15614702
	1-L27	1.516	BOLT, OIL LVL IND TUBE (HFH M6X1X13 9.8 POR W/ADH 14.2 OD THD LGTH 11.00) (M6 X 1 X 12) (HFH, 9.8 PE, 12.8 OD DR) (8.900) (AC-DELCO #11514149)	96	F (L36)	1	11514149
	1-L27	1.516	BOLT, OIL LVL IND TUBE (HEX FLG HD M6X1X16X9.8 PC) (9.764)	96	F (L36)	4	15614702
	1-L27	1.516	BOLT, OIL LVL IND TUBE (HFH M6X1X13 9.8 POR W/ADH 14.2 OD THD LGTH 11.00) (M6 X 1 X 12) (HFH, 9.8 PE, 12.8 OD DR) (8.900) (AC-DELCO #11514149)	96-97	F (L36)	1	11514149
	1-L27	1.516	BOLT, OIL LVL IND TUBE (M6X16) (9.8 7114M) (8.900)	98-99	F (L36)	1	11516398
	1-L27	1.516	BOLT, OIL LVL IND TUBE (M6X16) (9.8 7114M) (8.900)	00-01	F (L36)	1	11516398

cardiagn.com

	1-L27	1.516	BOLT, OIL LVL IND TUBE (M6X16) (9.8 7114M) (8.900)	02	F (L36)	1	11516398
404.	1-L27	1.516	SEAL, OIL LVL IND (O RING) (ALSO PART OF 401, 402) (BLACK) (6.07MM ID, 17.8MM DIA)	95-02	F (L36)	1	24504091
405.	1-L26	1.428	BOLT, OIL PAN (HFH, 1/4X20X.85, .862THD, .095 DG PT, GM280M, ZINC GM6280M)	95-02	F (L36)	20	24508626
408.	1-L25	1.426	PAN, OIL	95-02	F (L36)	1	12563241
	1-L25	1.426	PAN, OIL	96-97	F	1	12557557
409.	1-L26	1.429	GASKET, OIL PAN	95-02	F (L36)	1	24502397
412.	1-L26	1.453	PLUG, OIL PAN DRN (ALSO PART OF 408) (M12X1.75-6GX44.45) (W/MAGNET & SEAL)	95-02	F (L36)	1	24100042
413.	1-M3	1.656	SCREEN, O/PMP (W/SUC PIPE)	95-02	F (L36)	1	24505568
414.	1-M3	1.656	BOLT, O/PMP SCRN (TO CYL BLK) (HFH W/ADHES 1/4-20X.71, .54 THD, .44 OD, .09 DG PT, PC W/6124)	95	F (L36)	2	24503930
	1-M3	1.656	BOLT, O/PMP SCRN (TO CYL BLK) (HFH W/ADHES 1/4-20X.71, .54 THD, .44 OD, .09 DG PT, PC W/6124) (0.7" LONG)	96	F (L36) (1ST DES)	2	24503930
	1-M3	1.656	BOLT, O/PMP SCRN (TO CYL BLK) (HFH 1/4-20 X .80"LG) (W/.09 DG PT, .6 THD, .44 OD, 300M, 7114M)	96-02	F (L36)	2	24505570
415.	1-M3	1.657	GASKET, O/PMP SCRN (SUCTION PIPE FLANGE)	95-02	F (L36)	1	24501259
416.	1-M3	1.723	BOLT, O/PMP CVR (1/4-20X.88 280/275 OPT PZOR)	95-96	F (L36)	5	25519242
	1-M3	1.723	BOLT, O/PMP CVR (1/4-20X.88 280/275 OPT PZOR)	97-01	F (L36)	5	25519242
	1-M3	1.723	BOLT, O/PMP CVR (1/4-20X.88 280/275 OPT PZOR)	02	F (L36)	5	25519242
417.	1-M3	1.723	COVER, O/PMP	95-02	F (L36)	1	25521935
418.	1-M2	1.639	GEAR SET, O/PMP	95-02	F (L36)	1	24505433
419.	1-M6	1.836	FILTER, OIL (AC-DELCO #PF47)	95-02	F (L36)	1	25010792
	1-M6	1.836	FILTER, OIL (AC-DELCO #UPF47)	95-00	F (L36)	1	25322835
	1-M6	1.836	FILTER, OIL (AC-DELCO #SPF47)	95-00	F (L36)	1	25325404
420.	1-M7	1.840	BOLT, OIL FLTR ADAP (USED T/W 12346004 SEALER) (5/16-18 UNC-2AX1.50) (0.206)	95-02	F (L36)	2	24504713
423.	1-L27	1.516	SEAL, OIL LVL IND (O RING) (BLACK) (6.07MM ID, 17.8MM DIA)	95-02	F (L36)	1	24504091
424.	1-M7	1.840	ADAPTER, OIL FLTR (W/BYPASS VLV)	95-02	F (L36)	1	24508439
426.	1-M7	1.840	GASKET, OIL FLTR ADAP	95-02	F (L36)	1	25534742
427.	1-M2	1.609	VALVE, OIL PRESS RLF (USE W/O TRANSVERSE HOLES/SLOT)	95-02	F (L36)	1	25530949
428.	1-M2	1.609	SPRING, OIL PRESS RLF VLV	95-02	F (L36)	1	1262505

cardiagn.com

429.	1-L27	1.516	SENSOR, ENG OIL LVL	95-96	F (L36)	1	24507190
	1-L27	1.516	SWITCH, ENG OIL LVL IND	97-01	F (L36)	1	24507190
	1-L27	1.516	SWITCH, ENG OIL LVL IND	02	F (L36)	1	24507190
430.	1-M5	1.800	SENSOR, F/PMP SW & ENG OIL PRESS GA (4 BLADE TERM, 1/4-18 THD) (AC-DELCO #25627057)	95-96	F (L36)	1	25627057
	1-M5	1.800	SENSOR, ENG OIL PRESS GA (W/O F/PMP CONTACTS) (AC-DELCO #D1806A)	97-98	F (L36)	1	24505969
	1-M5	1.800	SENSOR, ENG OIL PRESS GA (W/PROTECTIVE CAP) (AC-DELCO #D1806A)	99-01	F (L36)	1	24505969
	1-M5	1.800	SENSOR, ENG OIL PRESS GA (W/PROTECTIVE CAP) (AC-DELCO #D1806A)	02	F (L36)	1	24505969

RPO DEFINITIONS
L36 - ENGINE GAS, 6 CYL, 3.8K, MFI, V6, HO (ERV6 SERIES)

cardiagn.com

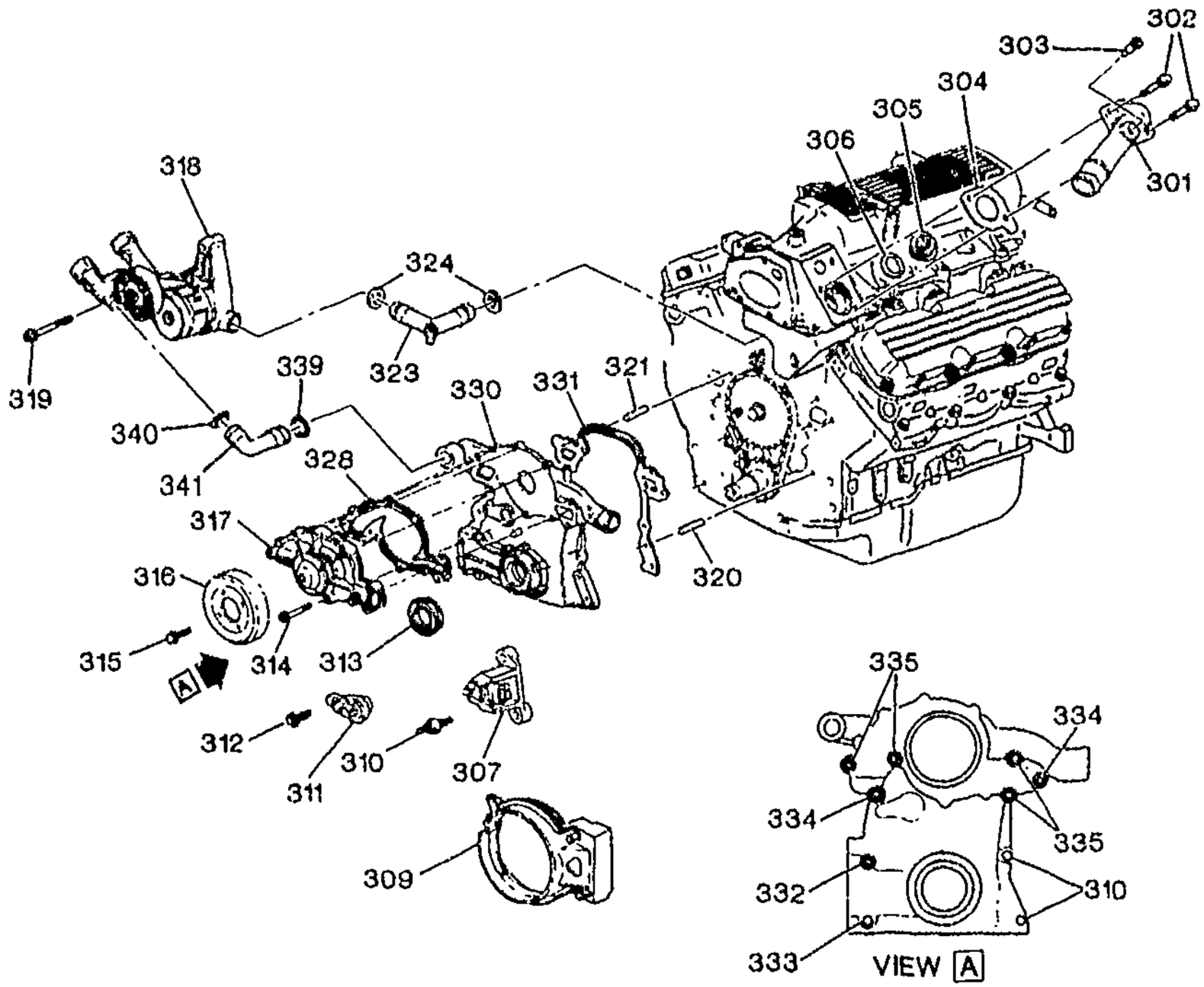

GM00-355

1998-2002 F ENGINE ASM-3.8L V6 PART 3 FRONT COVER AND COOLING (L36/3.8K)

301.	i-L25	1.153	OUTLET, WAT (W/O VALVE) (AC-DELCO #15-1704)	98-02	F (L36)	1	24503978
302.	1-L25	1.153	BOLT, WAT OTLT (M8X1.25X25) (8.900)	98-02	F (L36)	1	11508040
	1-L25	1.153	BOLT, WAT OTLT (THRU UPR TO LWR INT) (M8X1.25X66.4, 27 THD) (3.275) (HFH, M8X1.25X66.4, 27 THD, 15 OD, 9.8, PO, MACH)	98-02	F (L36)	1	24501552
303.	1-L21	1.035	VALVE, ENG COOL AIR BL	98-99	F (L36)	1	25535220
	1-L21	1.035	VALVE, ENG COOL AIR BL	00-02	F (L36)	1	10070107
304.	1-L25	1.154	GASKET, WAT OTLT (NOT REQUIRED FOR 1999-2000-01-02)	98	F (L36)	1	24502433
305.	1-L25	1.246	THERMOSTAT, ENG COOL (W/GSKT) (INCL 306) (AC-DELCO #131-120)	98-02	F (L36)	1	24505924
306.	1-L25	1.252	SEAL, ENG COOL THERM (O RING) (ALSO PART OF 305) (AC-DELCO #25535126)	98-02	F (L36)	1	25535126

cardiagn.com

307.	1-M12	2.383	SENSOR, CR/SHF POSN (4 PIN) (AC-DELCO #213-151)	98-02	F (L36)	1	10456161
309.	1-M12	2.383	SHIELD, CR/SHF POSN SEN	98-99	F (L36)	1	24506440
	1-M12	2.383	SHIELD, CR/SHF POSN SEN	00-02	F (L36)	1	24508586
310.	1-E15	0.206	STUD, ENG FRT CVR (ALSO HOLD CR/SHF SENSOR SHIELD & SENSOR) (HEX W/.65 OD X .06 THK WA, 5/16-18X1.53 W/1.1 THD)	98-01	F (L36)	2	24504717
	1-E15	0.206	STUD, ENG FRT CVR (ALSO HOLD CR/SHF SENSOR SHIELD & SENSOR) (HEX W/.65 OD X .06 THK WA, 5/16-18X1.53 W/1.1 THD)	02	F (L36)	2	24504717
311.	1-M12	2.383	SENSOR, CM/SHF POSN (AC-DELCO #213-346)	98-02	F (L36)	1	10456148
312.	1-M12	2.383	BOLT, CM/SHF POSN SEN (HEX-W/FLAT WA, 1/4-20X.69, .55 THD, 5 OD, 300M, PL, W/ADHES) (AC-DELCO #25526395)	98-02	F (L36)	1	25526395
313.	1-E16	0.213	SEAL, CR/SHF FRT OIL (87.78/87.25 MM O.D.)	98-02	F (L36)	1	24504098
314.	1-L23	1.079	BOLT, W/PMP (CLNT PUMP TO FRT CVR) (1/4-20X1.17, 1.03 THD) (W/SEALER 01052080)	98-02	F (L36)	4	25535660
315.	1-L22	1.062	BOLT, W/PMP PUL (W/PMP PUL) (M6X1.0 6G THD W/WSHR) (8MM SOCKET HD)	98-01	F (L36)	4	24503961
	1-L22	1.062	BOLT, W/PMP PUL (W/PMP PUL) (M6X1.0 6G THD W/WSHR) (8MM SOCKET HD)	02	F (L36)	4	24503961
316.	1-L22	1.062	PULLEY, W/PMP	98-01	F (L36)	1	24504931
	1-L22	1.062	PULLEY, W/PMP	02	F (L36)	1	24504931
317.	1-L23	1.069	PUMP KIT, WAT (AC-DELCO #251-562)	98-02	F (L36)	1	12482903
318.	1-L22	1.060	TENSIONER, DRV BELT	98	F (L36)	1	24506699
	1-L22	1.060	TENSIONER, DRV BELT	99-02	F (L36)	1	24508594
319.		8.900	BOLT MET HVY HEX FLG HD REDUCED BODY (DRV BELT TENSR)	98	F	2	11515772
		8.900	BOLT, HFH, M10X1.5X65, 22.3 OD, 7114M, RED BODY, 10.9, (DRV BELT TENSR)	99-01	F (L36)	2	11516109
		8.900	BOLT, HFH, M10X1.5X65, 22.3 OD, 7114M, RED BODY, 10.9, (DRV BELT TENSR)	02	F (L36)	2	11516109
320.	1-E15	0.206	PIN, ENG FRT CVR LOC (1/4 X 1-3/8", STEEL) (CHAMFERED ENDS) (8.939)	98-01	F (L36)	1	25536323
	1-E15	0.206	PIN, ENG FRT CVR LOC (1/4 X 1-3/8", STEEL) (CHAMFERED ENDS) (8.939)	02	F (L36)	1	25536323
321.	1-E15	0.206	PIN, ENG FRT CVR LOC (DWL PIN, 0.25X0.875, STL, PL, CHAMFERED ENDS)	98-01	F (L36)	2	24501162

cardiagn.com

	1-E15	0.206	PIN, ENG FRT CVR LOC (DWL PIN, 0.25X0.875, STL, PL, CHAMFERED ENDS)	02	F (L36)	2	24501162
323.	1-N27	8.846	PIPE, HTR WAT BYPASS INL (INCL 324)	98	F (L36)	1	24503423
	1-L23	1.097	PIPE, THERM BYPASS UPR (INCL 324) (8.846)	99-01	F (L36)	1	24503423
	1-L23	1.097	PIPE, THERM BYPASS UPR (INCL 324) (8.846)	02	F (L36)	1	24503423
324.	1-N27	8.846	SEAL, HTR WAT BYPASS INL PIPE (O RING) (ALSO PART OF 323) (0.674" ID) (9.260)	98-02	F (L36)	2	25537068
328.	1-L23	1.079	GASKET, W/PMP CVR	98-02	F (L36)	1	24501565
330.	1-E15	0.206	COVER, ENG FRT (W/LOCATING PIN) (QTY 2)	98-02	F (L36)	1	24502241
331.	1-E16	0.207	GASKET, ENG FRT CVR	98-02	F (L36)	1	24502252
332.	1-E15	0.206	STUD, ENG FRT CVR (ALSO HOLDS CR/SHF SENSOR SHIELD) (5/16-18X3.1) (HEX W/65 OD X .06 THK WA, 5/16-18X3.07 W2.6 THD)	98-01	F (L36)	1	24504718
	1-E15	0.206	STUD, ENG FRT CVR (ALSO HOLDS CR/SHF SENSOR SHIELD) (5/16-18X3.1) (HEX W/65 OD X .06 THK WA, 5/16-18X3.07 W2.6 THD)	02	F (L36)	1	24504718
333.	1-E15	0.206	BOLT, ENG FRT CVR (5/16-18 UNC-2AX3.04)	98-01	F (L36)	3	24504712
	1-E15	0.206	BOLT, ENG FRT CVR (5/16-18 UNC-2AX3.04)	02	F (L36)	3	24504712
334.	1-E15	0.206	BOLT, ENG FRT CVR (THRU ENG FRT CVR TO CYL BLK) (5/16-18 UNC-2AX1.50)	98-01	F (L36)	3	24504713
	1-E15	0.206	BOLT, ENG FRT CVR (THRU ENG FRT CVR TO CYL BLK) (5/16-18 UNC-2AX1.50)	02	F (L36)	3	24504713
335.	1-E15	0.206	BOLT, ENG FRT CVR (W/WASHER ENG FRT CVR TO CYL BLK (HEX W/.65 OD FL WA, 5/16-18 X 3.07, FULL OR 1.0 THD, 300M, PO) (5/16-18 UNC-2AX3.04)	98-01	F (L36)	3	24504712
	1-E15	0.206	BOLT, ENG FRT CVR (W/WASHER ENG FRT CVR TO CYL BLK (HEX W/.65 OD FL WA, 5/16-18 X 3.07, FULL OR 1.0 THD, 300M, PO) (5/16-18 UNC-2AX3.04)	02	F (L36)	3	24504712
339.	1-L23	1.097	SEAL, THERM BYPASS PIPE (O RING) (O-RING SEAL-0.799" ID, 0.1.03 X-SECT DIA, BLACK) (1.060)	98-01	F (L36)	1	24502846
	1-L23	1.097	SEAL, THERM BYPASS PIPE (O RING) (O-RING SEAL-0.799" ID, 0.1.03 X-SECT DIA, BLACK) (1.060)	02	F (L36)	1	24502846
340.	1-L23	1.097	SEAL, THERM BYPASS PIPE (O RING) (0.674" ID) (9.260)	98-01	F (L36)	1	25537068

cardiagn.com

	1-L23	1.097	SEAL, THERM BYPASS PIPE (O RING) (0.674" ID) (9.260)	02	F (L36)	1	25537068
341.	1-L23	1.097	PIPE, THERM BYPASS LWR	98-02	F (L36)	1	12565082

RPO DEFINITIONS
L36 -- ENGINE GAS, 6 CYL, 3.8K, MFI, V6, HO (ERV6 SERIES)

cardiagn.com

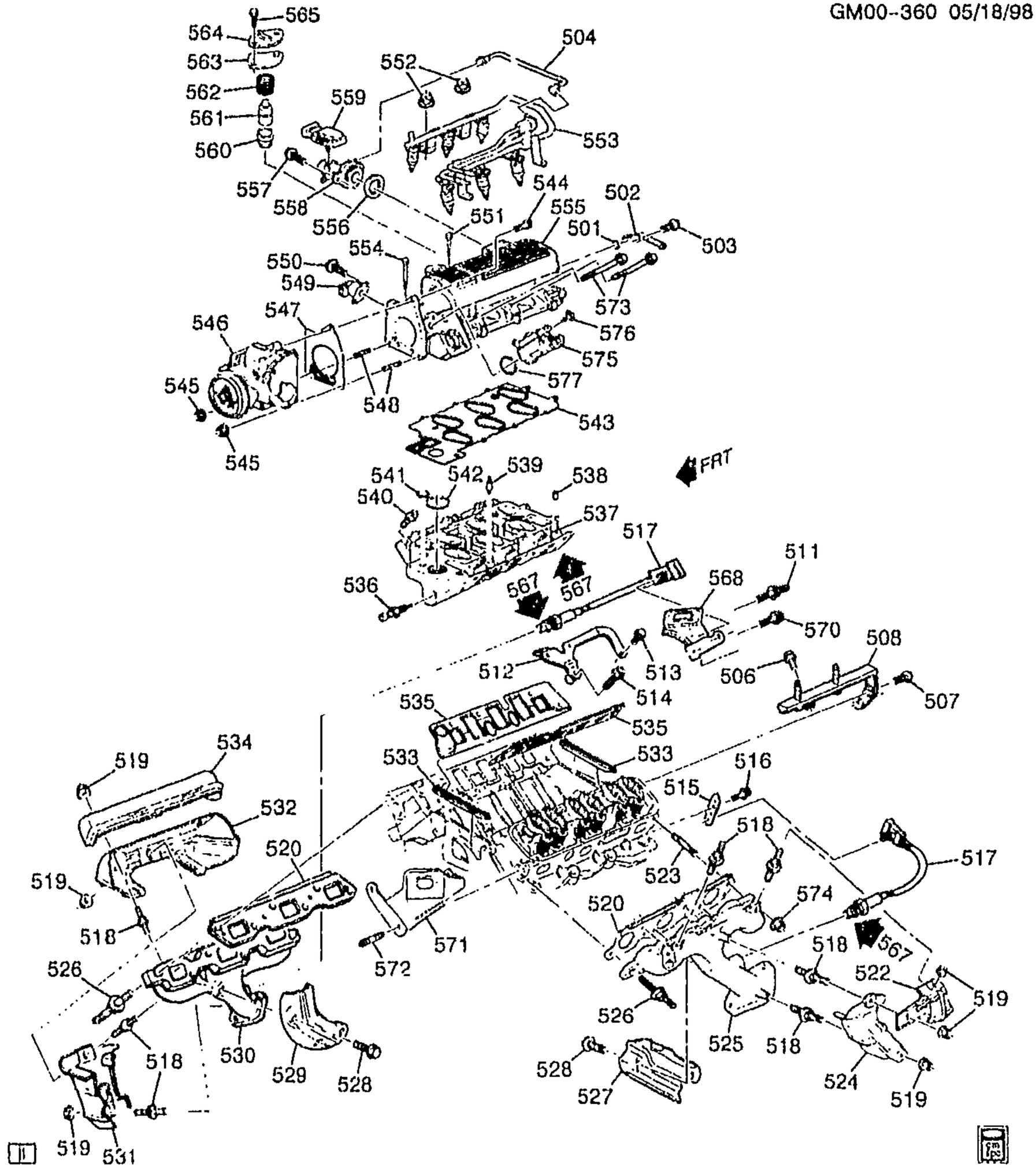

GM00-360

1999 F ENGINE ASM-3.8L V6 PART 5 MANIFOLDS & FUEL RELATED PARTS (L36/3.8K)

501.	1-N26	4.931	SEAL, P/B BOOS VAC PIPE (O RING)	99 F (L36)	1	24504812
502.	1-N26	4.930	PIPE, P/B BOOS VAC	99 F (L36)	1	24505522
503.	1-N26	4.931	BOLT, P/B BOOS VAC PIPE FLG (M6X1X10) (8.900)	99 F (L36)	1	11508567
504.	-M28	3.330	TUBE, FUEL PRESS REG VAC ..	99 F (L36)	1	24503421

cardiagn.com

506.	1–M12	2.383	BOLT, ELEK ICM BRKT BRKT (HFH M10X1.5X36, FULL THD, 10.9 PD *) (8.900)	99	F (L36)	1	24504922
507.	1–M12	2.383	BOLT, ELEK ICM BRKT BRKT (HFH M10X1.5X36, FULL THD, 10.9 PD *) (8.900)	99	F (L36)	1	24504922
508.	1–M12	2.383	BRACKET, ELEK ICM BRKT (TO COIL PAC BRKT)	99	F (L36)	1	24505095
511.	1–E13	0.004	STUD, ENG LIFT RR BRKT	99	F (L36)	1	25534836
512.	1–M11	2.277	BRACKET, GEN BR	99	F (L36)	1	24505362
513.	1–M11	2.277	BOLT, GEN BR BRKT (M10 X 1.5 X 18.7) (CYL HD PLUG LFTR GALLERY)	99	F (L36)	1	24503068
514.	1–M11	2.277	BOLT, GEN BR BRKT (USE W/SEALER (12345493)) (HFH M10X1.5X36, FULL THD, 10.9 PD *) (8.900)	99	F (L36)	1	24504922
515.	1–M10	2.251	BRACKET, SPLG WIRE RET (ALSO HOLDS TWO SENSOR WIRES)	99	F (L36)	1	24503822
516.	1–M10	2.251	BOLT, SPLG WIRE RET BRKT (HFH, 10X1.5X20 W/7.8 DIA X7.5 LG DG PT, 11 THD, 20.8 OD) (2.042)	99	F (L36)	1	24503655
517.	1–N14	3.682	SENSOR, HTD OXY (AT EXHAUST MANIFOLDS) (AC–DELCO #AFS109)	99	F (L36)	2	25312203
518.	1–N3	3.601	STUD, EXH MANIF H/SHLD (3–LH & 4–RH; (6X1X7.8;6X1X12;7114M) (STRAIGHT, W/3.5 LG HEX DR, 21 OAL, 10.9)	99	F (L36)	7	24505437
519.	1–N4	3.602	NUT, EXH MANIF H/SHLD (ACORN HFH, 6X1X7.2, 14.2 OD, 9, 7111M.) (2.530)	99	F (L36)	7	24505311
520.	1–M26	3.272	GASKET, EXH MANIF (1–RH, 1–LH) (3.270)	99	F (L36)	2	24506009
522.	1–N4	3.602	SHIELD, EXH MANIF UPR HT	99	F (L36)	LH	24505423
523.	1–M26	3.275	STUD, EXH MANIF (USED IN PLACE OF BOLT AS REQUIRED) (PT, 8X1.2 14, 50 OAL,) (HFH, 5/16–18X28.5, 21.5 THD W/12MM OF 6149M ADH + 6 DIA X 5 LG)	99	F (L36)	8	24502332
524.	1–N4	3.602	SHIELD, EXH MANIF LWR HT	99	F (L36)	LH	24505037
525.	1–N3	3.601	MANIFOLD, EXH	99	F (L36)	LH	24506364
526.	1–M26	3.275	STUD, EXH MANIF (TO CYL HD) (PT, 8X1.2 14, 50 OAL,) (HFH, 5/16–18X28.5, 21.5 THD W/12MM OF 6149M ADH + 6 DIA X 5 LG)	99	F (L36)	8	24502332
527.	1–N4	3.602	SHIELD, EXH MANIF HT (INR LWR)	99	F (L36)	LH	24505031
528.	1–N4	3.602	BOLT, EXH MANIF H/SHLD (INR LWR SHIELD TO MANIF (4–LH & 4–RH)) (6X1X12.15)	99	F (L36)	8	24505098
529.	1–N4	3.602	SHIELD, EXH MANIF HT (INR LWR)	99	F (L36)	RH	24505030

cardiagn.com

530.	1–N3	3.601	MANIFOLD, EXH	99	F (L36)	RH	24505967
531.	1–N4	3.602	SHIELD, EXH MANIF UPR HT	99	F (L36)	RH	24505036
532.	1–N4	3.602	SHIELD, EXH MANIF UPR HT (OTR)	99	F (L36)	RH	24505034
533.		N.S.	SEAL, INT MANIF (*KIT3)				
534.	1–N4	[illegible]	SHIELD, EXH MANIF UPR HT	99	F (L36)	RH	24505751
535.		N.S.	GASKET, INT MANIF (*KIT2, KIT3)				
536.	1–L24	1.150	SENSOR, ENG COOL TEMP (W/ENG COOL T/GA SEN) (3 BLADE TERM) (W/IND SW) (3.682) (AC–DELCO #213–815)	99	F (L36)	1	10096181
537.	1–M25	3.265	MANIFOLD, LWR INT (INCL 501, 511, 512, 513, 514, 563)	99	F (L36)	1	24505829
538.	1–M26	3.275	PIN, INT MANIF LOC (DOWELL PIN DIA–6.87, LENGTH–15.87, CHAM ENDS, STL) (3.342)	99	F (L36)	2	24500775
539.	1–M27	3.300	STUD, F/INJR	99	F (L36)	4	24505733
540.	1–M26	3.275	BOLT, INT MANIF (INT MANIF) (5/16–18 X 1 1/4) (8.900)	99	F (L36)	10	9440227
541.	1–M25	3.270	SEAL, INT MANIF (YELLOW) (3.337)	99	F (L36)	1	24501563
542.	1–M25	3.270	SEAL, INT MANIF	99	F (L36)	1	24503377
543.	1–M25	3.270	GASKET, INT MANIF (UPR TO LWR)	99	F (L36)	1	24504789
544.	1–N2	3.336	BOLT, THROT BODY (M6X1X36, 4.5 DOG PT) (25 THD, 15 O.D. HD, 10.9, 7114M, W/6124M ADHES) (3.275)	99	F (L36)	1	24506498
545.	1–N2	3.336	NUT, THROT BODY (ACORN HFH, 6X1X7.2, 14.2 OD, 9, 7111M.) (2.530)	99	F (L36)	2	24505611
546.	1–M28	3.335	BODY, THROT (W/ELEC THR BODY) (MODEL–ELECTRONIC THROTTLE ACTUATION CONTROL–TAC) (SEE GROUP 3.000"THROTTLE BODY"FOR DETAIL ILLUSTRATED VIEW.) (AC–DELCO #24507244)	99	F (L36)	1	24507244
547.	1–N2	3.336	GASKET, THROT BODY (AC–DELCO #24506259)	99	F (L36)	1	24506259
548.	1–N2	3.336	STUD, THROT BODY (M6X1.0X15.5)	99	F (L36)	2	24504462
549.	1–N19	3.820	VALVE, IDLE AIR CONT (AC–DELCO #217–427)	99	F (L36)	1	17112929
550.	1–N2	3.336	BOLT, IDLE AIR C/VLV	99	F (L36)	2	17090845
551.	1–M26	3.275	BOLT, INT MANIF (M6X1X36, 4.5 DOG PT) (25 THD, 15 O.D. HD, 10.9, 7114M, W/6124M ADHES)	99	F (L36)	9	24506498
552.	1–M27	3.300	NUT, F/INJR (ACORN HFH, 6X1X7.2, 14.2 OD, 9, 7111M.) (2.530)	99	F (L36)	4	24505611
553.		N.S.	INJECTOR, SEQ M/PORT FUEL (W/FUEL RL) (SEE "FUEL INJECTOR RAIL" ILLUSTRATION IN GRP. 3.000 FOR DETAILED VIEW.)				

cardiagn.com

554.	1-M26	3.275	BOLT, INT MANIF (M6X1X86.8 W/ADH)	99	F (L36)	1	24505205
555.	1-M25	3.265	MANIFOLD, UPR INT (W/ ELEC THR BODY) (INCLS 501, 502, 503, 560, 561, 562, 563, 564, 565)	99	F (L36)	1	24505921
556.	1-M27	3.278	SEAL, VAC SCE MANIF (O RING) (0.984 ID W/.139 X-SECTION DIA, BLACK FC RUBBER) (W/TEFLON)	99	F (L36)	1	24503420
557.	1-M27	3.278	BOLT, VAC SCE HARN MANIF	99	F (L36)	1	24505038
558.	1-M27	3.278	MANIFOLD, VAC SCE	99	F (L36)	1	24503419
559.	1-N14	3.682	SENSOR, MAP (AC-DELCO #213-351)	99	F (L36)	1	16249939
560.	1-M4	1.745	SEAL, PCV VLV	99	F (L36)	1	25534756
561.	1-M4	1.745	VALVE, PCV (AC-DELCO #CV892C)	99	F (L36)	1	25043843
562.	1-M4	1.745	SPRING, PCV VLV	99	F (L36)	1	24500431
563.	1-M4	1.745	GASKET, PCV VLV CVR	99	F (L36)	1	24503777
564.	1-M4	1.745	COVER, PCV VLV	99	F (L36)	1	24504621
565.		8.900	BOLT, M6X1X16, 13.5 THD, 14.2 OD, 9.8, SN-ZN (PCV VLV CVR)	99	F (L36)	2	11517517
	1-M4	1.745	BOLT, PCV VLV CVR (M6X16) (9.8 7114M) (8.900)	99	F (L36)	1	11516398
567.		8.800	LUBRICANT, ANTI-SEIZE (DRY FILM), 4 OZ., BRUSH TOP CAN (SEALER, OXY SEN HOLE)	99		AR	12377953
568.	1-E13	0.004	BRACKET, ENG LIFT (FRT)	99	F (L36)	RH	24503528
	1-E13	0.004	BRACKET, ENG LIFT (FRT)	99	F (L36)	LH	24508233
570.	1-E13	0.004	BOLT, ENG LIFT RR BRKT (HEX M10X1.5X20 9.8 PZOR 22 OD 18MM THD (T/W 12345493 ADHES) (8.900)	99	F (L36)	2	11508202
571.	1-E13	0.004	BRACKET, ENG LIFT (FRT)	99	F (L36)	RH	24503528
	1-E13	0.004	BRACKET, ENG LIFT (FRT)	99	F (L36)	LH	24508233
572.	1-N11	3.671	STUD, EGR VLV ADAP	99	F (L36)	2	24504213
573.	1-M26	3.275	BOLT, INT MANIF (M8X1.25X66.4, 27 THD)	99	F (L36)	2	24501552
574.	1-N5	3.604	NUT, EXH MANIF (M8X1.25, 9THK, 17.6OD) (8.917)	99	F (L36)	8	11517031
575.	1-M23	3.130	VALVE, EVAP EMIS CNSTR PURGE SOL (LOCATION AT INTAKE MANIFOLD) (AC-DELCO #214-646)	99	F (L36)	1	1997279
	1-M23	3.130	VALVE, EVAP EMIS CNSTR PURGE SOL (LOCATION NEAR ENGINE INTAKE MANIFOLD (FROM THROTTLE BODY) (AC-DELCO #214-641)	99	F (L36)	1	1997278
576.	1-M23	3.130	BOLT, EVAP EMIS CNSTE PURGE SOL VLV (HEX W/CON WA, M6X1X16, 13 THD, 17 OD, 9.8, 7111M, MACH) (8.900)	99	F (L36)	1	11515704
577.	1-M23	3.130	SEAL, EVAP EMIS CNSTR PURGE SOL VLV (O RING)	99	F (L36)	1	10490666

cardiagn.com

2.	1–E16	0.289	GASKET KIT, CYL HD (INT–TO–BLK SEAL HAS 2 LOCATING PINS) (LESS VLV SEALS)	99	F (L36)	1	12539095
3.	1–M25	3.270	GASKET KIT, INT MANIF	99	F (L36)	1	12480031

RPO DEFINITIONS
L36 – ENGINE GAS, 6 CYL, 3.8K, MFI, V6, HO (ERV6 SERIES)

cardiagn.com

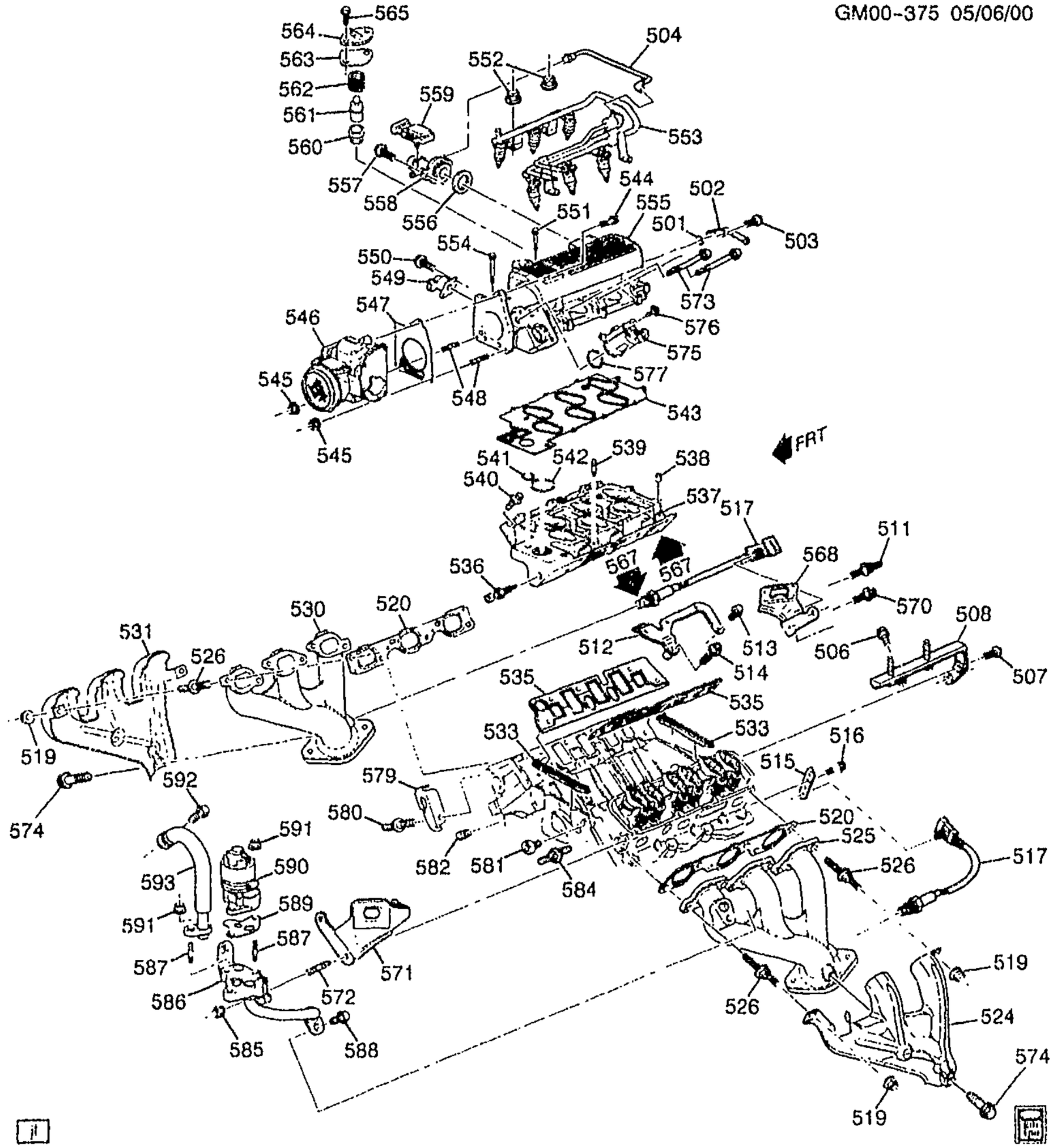

2000-2002 F ENGINE ASM-3.8L V6 PART 5 MANIFOLDS & FUEL RELATED PARTS (L36/3.8K)

501.	1-N26	4.931	SEAL, P/B BOOS VAC PIPE (O RING)	00-02	F (L36)	1	24504612
502.	1-N26	4.930	PIPE, P/B BOOS VAC	00-02	F (L36)	1	24505522
503.		8.900	BOLT, HEX LARGE FLANGED M6X1X10 PC (P/B BOOS VAC PIPE FLG)	00-02	.....	1	11508567

cardiagn.com

504.	1-M26	3.330	TUBE, FUEL PRESS REG VAC ..	00-02	F (L36)	1	24503421
506.		8.900	BOLT, HFH W/T50 INT TORX, 10X1.5X37.5, 35 THD W/6124M ADH 17.5 OD 10.9 , 7114M (ELEK ICM BRKT)	00-02	F (L36)	1	24504922
507.	1-M12	2.383	BOLT, ELEK ICM BRKT BRKT (HFH M10X1.5X36, FULL THD, 10.9 PD *) (8.900)	00-01	F (L36)	1	24504922
	1-M12	2.383	BOLT, ELEK ICM BRKT BRKT (HFH M10X1.5X36, FULL THD, 10.9 PD *) (8.900)	02	F (L36)	1	24504922
508.	1-M12	2.383	BRACKET, ELEK ICM BRKT (TO COIL PAC BRKT)	00-02	F (L36)	1	24505095
511.	1-E13	0.004	STUD, ENG LIFT RR BRKT	00-02	F (L36)	1	25534836
512.	1-M11	2.277	BRACKET, GEN BR	00-02	F (L36)	1	24508924
513.	1-M11	2.277	BOLT, GEN BR BRKT (M10 X 1.5 X 18.7) (CYL HD PLUG LFTR GALLERY)	00-01	F (L36)	1	24503068
	1-M11	2.277	BOLT, GEN BR BRKT (M10 X 1.5 X 18.7) (CYL HD PLUG LFTR GALLERY)	02	F (L36)	1	24503068
514.	1-M11	2.277	BOLT, GEN BR BRKT (USE W/SEALER (12345493)) (HFH M10X1.5X36, FULL THD, 10.9 PD *) (8.900)	00-01	F (L36)	1	24504922
	1-M11	2.277	BOLT, GEN BR BRKT (USE W/SEALER (12345493)) (HFH M10X1.5X36, FULL THD, 10.9 PD *) (8.900)	02	F (L36)	1	24504922
515.	1-M10	2.251	BRACKET, SPLG WIRE RET (ALSO HOLDS TWO SENSOR WIRES)	00-01	F (L36)	1	24503822
	1-M10	2.251	BRACKET, SPLG WIRE RET (ALSO HOLDS TWO SENSOR WIRES)	02	F (L36)	1	24503822
516.	1-M10	2.251	BOLT, SPLG WIRE RET BRKT (HFH, 10X1.5X20 W/7.8 DIA X7.5 LG DG PT, 11 THD, 20.8 OD) (2.042)	00-02	F (L36)	1	24503655
	1-M10	2.251	BOLT, SPLG WIRE RET BRKT (BOLT, R/AXL TORQ ARM OTR BRKT (HFH 5/16-18 X5/8)) (8.900) (AC-DELCO #9440224) .	00	F (L36)	1	9440224
517.	1-N14	3.682	SENSOR, HTD OXY (POSN 1) (AT EXHAUST MANIFOLDS) (AC-DELCO #AFS109)	00-01	F (L36)	2	25312203
	1-N14	3.682	SENSOR, HTD OXY (POSN 1) (AT EXHAUST MANIFOLDS) (AC-DELCO #AFS109)	02	F (L36)	2	25312203
519.		8.917	NUT, HFH, M8X1.25X8.8, 17.9 OD, 10 DIN, PREV TORQUE (EXH MANIF H/SHLD)	00-02	F	7	11517031
520.	1-M25	3.270	GASKET, EXH MANIF	00-02	F (L36)	2	24507676
524.	1-N4	3.602	SHIELD, EXH MANIF HT	00-02	F (L36)	LH	24507677
525.	1-N3	3.601	MANIFOLD, EXH	00-02	F (L36)	LH	24507680

cardiagn.com

526.	1-M26	3.275	STUD, EXH MANIF (TO CYL HD) (PT, 8X1.2 14, 50 OAL,) (HFH, 5/16-18X28.5, 21.5 THD W/12MM OF 6149M ADH + 6 DIA X 5 LG)	00-02	F (L36)	8	24502332
530.	1-N3	3.601	MANIFOLD, EXH	00-02	F (L36)	RH	24507682
531.	1-N4	3.602	SHIELD, EXH MANIF HT	00-01	F (L36)	RH	24507678
	1-N4	3.602	SHIELD, EXH MANIF HT	02	F (L36)	RH	24507678
533.		N.S.	SEAL, INT MANIF (*KIT3)		.....		
535.		N.S.	GASKET, INT MANIF (*KIT2, KIT3)		.....		
536.	1-N14	3.682	SENSOR, ENG COOL TEMP (AC-DELCO #213-928)	01-02	F (L36, M30, M49)	1	15326386
	1-L24	1.150	SENSOR, ENG COOL TEMP (3.682) (AC-DELCO #213-928)	01-02	F (L36, M30, M49)	1	15326386
	1-L24	1.150	SENSOR, ENG COOL TEMP (AT INT MANIF, INTERFACES W/ECM, USED FOR CLUSTERS W/OIL GAGE & LIGHT COMB. GOES W/12101899 CONN) (2-WAY M) (3.682) (AC-DELCO #213-310)	00	F (L36)	1	12146312
537.	1-M25	3.265	MANIFOLD, LWR INT (INCL 501, 511, 512, 513, 514, 563)	00-02	F (L36)	1	24505829
538.	1-M26	3.275	PIN, INT MANIF LOC (DOWELL PIN DIA-6.87, LENGTH-15.87, CHAM ENDS, STL) (3.342)	00-02	F (L36)	2	24500775
539.	1-M27	3.300	STUD, F/INJR	00-02	F (L36)	4	24505733
540.		8.900	BOLT, HFH 5-16-18X1.25 280M POR .66 OD DIM A-94 (INT MANIF)	00-02	F (L36)	10	9440227
541.	1-M25	3.270	SEAL, INT MANIF (YELLOW) (3.337)	00-01	F (L36)	1	24501563
	1-M25	3.270	SEAL, INT MANIF (YELLOW) (3.337)	02	F (L36)	1	24501563
542.	1-M25	3.270	SEAL, INT MANIF	00-01	F (L36)	1	24503377
	1-M25	3.270	SEAL, INT MANIF	02	F (L36)	1	24503377
543.	1-M25	3.270	GASKET, INT MANIF (UPR TO LWR)	00-02	F (L36)	1	24504789
544.	1-N2	3.336	BOLT, THROT BODY (M6X1X36, 4.5 DOG PT) (25 THD, 15 O.D. HD, 10.9, 7114M, W/6124M ADHES) (3.275)	00-01	F (L36)	1	24506498
	1-N2	3.336	BOLT, THROT BODY (M6X1X30, POR 9.8) (8.900)	01-02	F (L36)	1	11516425
545.	1-N2	3.336	NUT, THROT BODY (ACORN HFH, 6X1X7.2, 14.2 OD, 9, 7111M.) (2.530)	00-02	F (L36)	2	24505611
546.	1-M28	3.335	BODY, THROT (MODEL-ELECTRONIC THROTTLE ACTUATION CONTROL-TAC) (SEE GROUP 3.000"THROTTLE BODY"FOR DETAIL ILLUSTRATED VIEW.) (AC-DELCO #24507244)	01-02	F (L36)	1	24507244

cardiagn.com

	1-M26	3.335	BODY, THROT (W/ELEC THR BODY) (MODEL-ELECTRONIC THROTTLE ACTUATION CONTROL-TAC) (SEE GROUP 3.000"THROTTLE BODY"FOR DETAIL ILLUSTRATED VIEW.) (AC-DELCO #24507244)	00	F (L36)	1	24507244
547.	1-N2	3.336	GASKET, THROT BODY (AC-DELCO #24506259)	00-02	F (L36)	1	24506259
548.	1-N2	3.336	STUD, THROT BODY (M6X1.0X15.5)	00-02	F (L36)	2	24504462
549.	1-N19	3.820	VALVE, IDLE AIR CONT (AC-DELCO #217-427)	00-02	F (L36)	1	17112929
550.	1-N2	3.336	BOLT, IDLE AIR C/VLV	00-02	F (L36)	2	17090845
551.	1-M26	3.275	BOLT, INT MANIF (M6X1X36, 4.5 DOG PT) (25 THD, 15 O.D. HD, 10.9, 7114M, W/6124M ADHES) ..	00-01	F (L36)	8	24506498
	1-M26	3.275	BOLT, INT MANIF (M6X1X36, 4.5 DOG PT) (25 THD, 15 O.D. HD, 10.9, 7114M, W/6124M ADHES) ..	02	F (L36)	8	24506498
552.	1-M27	3.300	NUT, F/INJR (ACORN HFH, 6X1X7.2, 14.2 OD, 9, 7111M.) (2.530)	00-02	F (L36)	4	24505611
553.		N.S.	INJECTOR, SEQ M/PORT FUEL (W/FUEL RL) (SEE "FUEL INJECTOR RAIL" ILLUSTRATION IN GRP. 3.000 FOR DETAILED VIEW.)		.....		
554.	1-M26	3.275	BOLT, INT MANIF (M6X1X86.8 W/ADH)	00-01	F (L36)	1	24505205
	1-M26	3.275	BOLT, INT MANIF (M6X1X86.8 W/ADH)	02	F (L36)	1	24505205
555.	1-M25	3.265	MANIFOLD, UPR INT (W/ ELEC THR BODY) (INCLS 501, 502, 503, 560, 561, 562, 563, 564, 565)	00-02	F (L36)	1	24505921
556.	1-M27	3.278	SEAL, VAC SCE MANIF (O RING) (0.984 ID W/.139 X-SECTION DIA, BLACK FC RUBBER) (W/TEFLON)	00-02	F (L36)	1	24503420
557.	1-M27	3.278	BOLT, VAC SCE HARN MANIF ...	00-01	F (L36)	1	24505038
	1-M27	3.278	BOLT, VAC SCE HARN MANIF ...	02	F (L36)	1	24505038
558.	1-M27	3.278	MANIFOLD, VAC SCE	00-02	F (L36)	1	24503419
559.	1-N14	3.682	SENSOR, MAP (AC-DELCO #213-796)	00-02	F (L36)	1	9359409
560.	1-M4	1.745	SEAL, PCV VLV	00-02	F (L36)	1	25534756
561.	1-M4	1.745	VALVE, PCV (AC-DELCO #CV892C)	00-02	F (L36)	1	25043843
562.	1-M4	1.745	SPRING, PCV VLV	00-02	F (L36)	1	24500431
563.	1-M4	1.745	GASKET, PCV VLV CVR	00-02	F (L36)	1	24503777
564.	1-M4	1.745	COVER, PCV VLV	00-02	F (L36)	1	24504621
565.		8.900	BOLT, M6X1X16, 13.5 THD, 14.2 OD, 9.8, SN-ZN (PCV VLV CVR) .	00-02	F (L36)	2	11517517
		8.900	BOLT, M6X1X16, 13.5 THD, 14.2 OD, 9.8, SN-ZN (PCV VLV CVR) .	00-02	.....	2	11517517
567.		8.800	LUBRICANT, ANTI-SEIZE (DRY FILM), 4 OZ., BRUSH TOP CAN (SEALER, OXY SEN HOLE)	00-02	.....	AR	12377953

cardiagn.com

568.	1-E13	0.004	BRACKET, ENG LIFT (FRT)	00-02	F (L36)	RH	24503528
	1-E13	0.004	BRACKET, ENG LIFT (FRT)	00-02	F (L36)	LH	24508233
570.		8.900	BOLT, HFH M10X1.5X20 9.8 PZOR (ENG LIFT RR BRKT)	00-02	F (L36)	2	11508202
571.	1-E13	0.004	BRACKET, ENG LIFT (FRT)	00-02	F (L36)	RH	24503528
	1-E13	0.004	BRACKET, ENG LIFT (FRT)	00-02	F (L36)	LH	24508233
572.	1-N11	3.671	STUD, EGR VLV ADAP	00-01	F (L36)	2	24504213
	1-N11	3.671	STUD, EGR VLV ADAP	02	F (L36)	2	24504213
573.	1-M26	3.275	BOLT, INT MANIF (M8X1.25X66.4, 27 THD)	00-01	F (L36)	2	24501552
	1-M26	3.275	BOLT, INT MANIF (M8X1.25X66.4, 27 THD)	02	F (L36)	2	24501552
574.	1-N4	3.602	BOLT, EXH MANIF H/SHLD (6X1X12.15)	00-01	F (L36)	2	24505098
	1-N4	3.602	BOLT, EXH MANIF H/SHLD (6X1X12.15)	02	F (L36)	2	24505098
575.	1-M23	3.130	VALVE, EVAP EMIS CNSTR PURGE SOL (LOCATION AT INTAKE MANIFOLD) (AC-DELCO #214-646)	00-02	F (L36)	1	1997279
	1-M23	3.130	VALVE, EVAP EMIS CNSTR PURGE SOL (LOCATION NEAR ENGINE INTAKE MANIFOLD (FROM THROTTLE BODY) (AC-DELCO #214-641)	00-02	F (L36)	1	1997278
576.		8.900	BOLT/SCREW, HEX W/FL WA 17 OD, M6X1X20, 9.8, 4345M, DOG PT (EVAP EMIS CNSTE PURGE SOL VLV)	00-02		1	11515704
577.	1-M23	3.130	SEAL, EVAP EMIS CNSTR PURGE SOL VLV (O RING)	00-02	F (L36)	1	10490666
579.	1-M10	2.251	BRACKET, SPLG WIRE RET (HOLDS 2 SEN WIRES)	00-02	F (L36)	1	24503822
	1-M10	2.251	BRACKET, SPLG WIRE RET (HOLDS 2-WIRES;RT FRT TO CYL HD)	00-02	F (L36)	1	24508232
580.	1-M10	2.251	STUD, SPLG WIRE SUPT	00-02	F (L36)	1	24508552
581.	1-E13	0.027	PLUG, ENG MT STRUT ACC HOLE (T50 TORX DR, 9.8, PC) (FLAT HD, 10X1.5X17.6, 15.16G THD W/10MM, 16.5 ODX6.5 THK HD W/) (0.293)	00-02	F (L36)	1	24503404
582.		8.971	PLUG, AUTO HEX SOC DRN, 1/4 PTF-SAE SHORT (ENG BLK OIL GAL) (8.921)	00-02		1	444777
584.	1-M21	2.559	STUD, ENG WRG HARN BRKT (HFH 10X1.5X20, M8X 1.25X15, 9.8 POR, 21.5 OD 43.5 TL) (0.004)	00-01	F (L36)	2	10048662
	1-M21	2.559	STUD, ENG WRG HARN BRKT (HFH 10X1.5X20, M8X 1.25X15, 9.8 POR, 21.5 OD 43.5 TL) (0.004)	02	F (L36)	2	10048662
585.		8.915	NUT, HFH, 10X1.5 6H THD, 21.3 OD, 9.8 THK 13 HEX DR, GRD 9, ZF (ENG EGR VLV ADAP) (8.917)	00-02		2	10255857
586.	1-N14	3.680	ADAPTER, EGR VLV	00-02	F (L36)	1	24508446

cardiagn.com

587.	1-N11	3.671	STUD, EGR VLV (ONLY TO EGR ADAPT) (STRAIGHT, M8X1.25X16, M8X1.25X16, 36 TL, 9.8, PC.)	00-02	F (L36)	3	24501688
588.		8.900	BOLT, HEX M8X1.25X25 PZOR 9.8 (EGR VLV ADAP PIPE)	00-02		1	11508040
589.	1-N14	3.680	GASKET, EGR VLV (AC-DELCO #219-333)	00-02	F (L36)	1	12567275
590.	1-N5	3.670	VALVE, EGR (AC-DELCO #214-1064)	02	F (L36)	1	12568589
	1-N5	3.670	VALVE, EGR (PROD 17200278) (AC-DELCO #214-1036)	00-02	F (L36)	1	17113644
591.		8.917	NUT, HFH, M8X1.25, 17.9 OD, 738 THK, 13MM HEX, 10, ZF (EGR VLV) (8.915) (AC-DELCO #11514596)	00-02		2	11514596
592.		8.900	BOLT, M8X1.25X25 9.8 (EGR VLV)	00-02		2	11508476
593.	1-N11	3.675	PIPE, EGR VLV OTLT	00-02	F (L36)	1	24508445

SERVICE KITS

2.	1-E16	0.289	GASKET KIT, CYL HD (INT-TO-BLK SEAL HAS 2 LOCATING PINS) (LESS VLV SEALS)	00-02	F (L36)	1	12539095
3.	1-M25	3.270	GASKET KIT, INT MANIF	00-02	F (L36)	1	12480831

RPO DEFINITIONS
L36 – ENGINE GAS, 6 CYL, 3.8K, MFI, V6, HO (ERV6 SERIES)
M30 – TRANSMISSION,AUTOMATIC 4 SPEED,4L60E,ELECTRONIC
M49 – TRANSMISSION MAN 5 SPD, BORG WARNER, 77MM, 3.75 1ST, .76 5TH, O/D

cardiagn.com

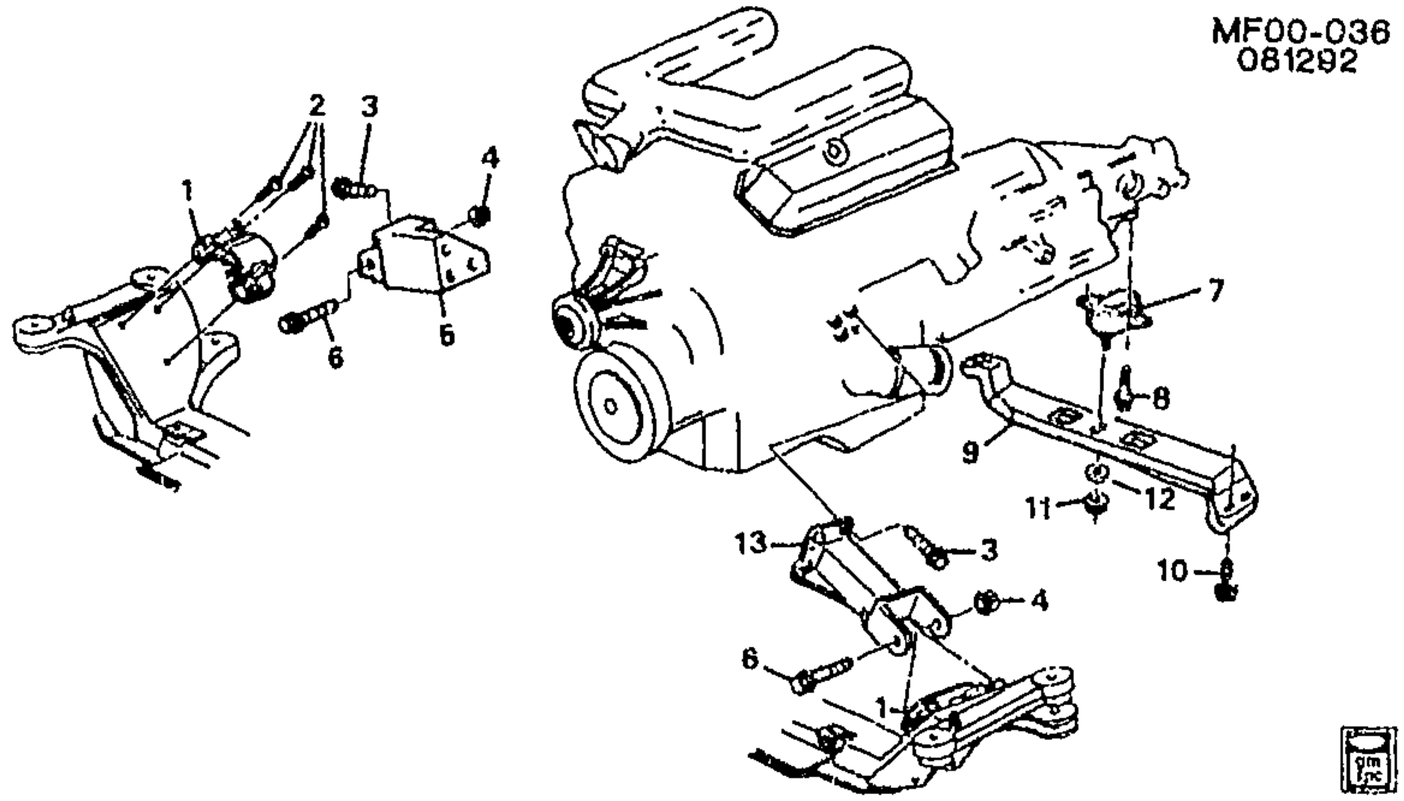

MF00-036

1993-1995 F ENGINE & TRANSMISSION MOUNTING-V6 (L32/3.4S)

1.	1-E13	0.027	MOUNT, ENG	93-95	F (L32)	2	22173130
2.	1-E13	0.002	BOLT, ENG MT (HEX W/CON WA-10X1.5X25) (6.525)	93-95	F (L32)	6	1638817
3.		8.900	BOLT, HFH M10X1.5X20 9.8 PZOR (ENG MT BRKT)	93-95		6	11508202
4.		8.917	NUT, HEX FLG PREVAILING TORQ (M12X1.75X14) (ZO 10) (ENG MT)	93-95		2	11515744
5.	1-E14	0.029	BRACKET, ENG MT	93-95	F (L32)	RH	10198330
6.	1-E13	0.002	BOLT, ENG MT (HFH, M12X1.75X150, 45 THD, 24.7 OD, 10.9, PO)	93-95	F (L32)	2	11515459
7.	1-N22 1-N23	4.081	MOUNT, TRANS	93-95	F (L32)	1	22145293
8.	1-N24	4.085	BOLT, TRANS MT (HFH W/CON WA, M10X1.5X30, 22 THD, 10.9, 7112)	93-95	F	2	22570841
9.	1-N22 1-N23	4.081	SUPPORT, TRANS	93-95	F87 (L32)	1	10198328
10.		8.900	BOLT, HEX HD W/CONICAL WA, M10X1.5X35, MACH, 10.9, PZ7112 (TRANS SUPT)	93-95		4	11515946
11.		8.915	NUT, HFH, 10X1.5 6H THD, 21.3 OD, 9.8 THK 13 HEX DR, GRD 9, ZF (TRANS MT) (8.917)	93-95		1	10255857
12.		DISCON	WASHER, TRANS MT			1	11502474
13.	1-E14	0.029	BRACKET, ENG MT	93-95	F (L32)	LH	10198329

RPO DEFINITIONS
L32 - ENGINE,3.4L,V6,(3.4S),SFI,OHV

cardiagn.com

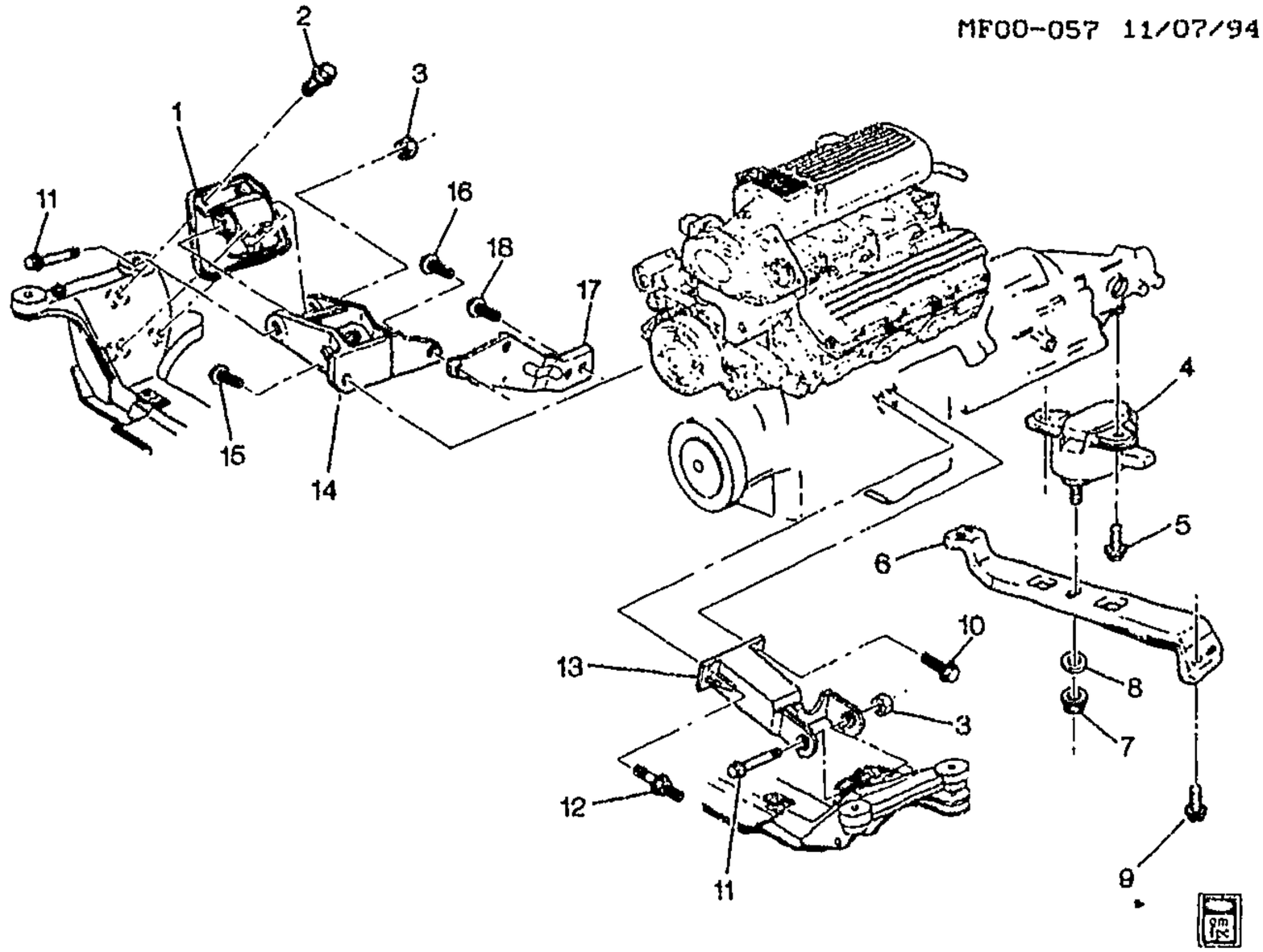

MF00-057

1995-1997 F ENGINE & TRANSMISSION MOUNTING-V6 (L36/3.8L)

1.	1-E13	0.027	MOUNT, ENG	95-97	F (L36)	RH	22173129
	1-E13	0.027	MOUNT, ENG	95-97	F (L36)	LH	22173130
2.	1-E13	0.002	BOLT, ENG MT (HEX W/CON WA-10X1.5X25) (6.525)	95-97	F (L36)	6	1638817
3.		8.917	NUT, HEX FLG PREVAILING TORQ (M12X1.75X14) (ZO 10) (ENG MT)	95-97	F	2	11515744
4.	1-N22 1-N23	4.081	MOUNT, TRANS	95-97	F (L36)	1	22145293
5.	1-N24	4.085	BOLT, TRANS MT (HFH W/CON WA, M10X1.5X30, 22 THD, 10.9, 7112)	95-97	F	2	22570841
6.	1-N22 1-N23	4.081	SUPPORT, TRANS	95-97	F87 (L36)	1	10198328
	1-N22 1-N23	4.081	SUPPORT, TRANS	95-97	F67 (L36, M30)	1	10198344
	1-N22 1-N23	4.081	SUPPORT, TRANS	96-97	F67 (L36, M49)	1	10198344
7.		8.915	NUT, HFH, 10X1.5 6H THD, 21.3 OD, 9.8 THK 13 HEX DR, GRD 9, ZF (TRANS MT) (8.917)	95-97	F	1	10255857
8.		N.S.	WASHER, TRANS MT				
9.		8.900	BOLT, HEX HD W/CONICAL WA, M10X1.5X35, MACH, 10.9, PZ7112 (TRANS SUPT)	95-97	F	4	11515946

cardiagn.com

10.		8.900	BOLT, HFH M12X1.5X25 9.8 PZOR (ENG MT BRKT)	95-97	F	2	11515774
11.	1-E13	0.002	BOLT, ENG MT (12X1.75X140, 10.9)	95-97	F	1	11515458
12.	1-E14	0.029	STUD, ENG MT BRKT (ATCHS NEG BAT CBL; LH BRKT TO ENG)	95-97	F (L36)	1	10247276
13.	1-E14	0.029	BRACKET, ENG MT	95-97	F (L36)	LH	10274964
14.	1-E14	0.029	BRACKET, ENG MT	95-97	F (L36)	RH	10265186
15.		8.900	BOLT, HFH M12X1.5X25 9.8 PZOR (ENG MT BRKT)	95-97	F	2	11515774
16.		8.900	BOLT, M10X1.5X32, 28.10 THD, 20.28 OD, 10.9, GM 7114M (TRANS BR) (AC-DELCO #179-2006)	95-97	F	1	15726460
17.	1-N22 1-N23	4.081	BRACE, TRANS	95-97	F (L36, M30)	LH	12550238
	1-N22 1-N23	4.081	BRACE, TRANS	96-97	F (L36, M49)	LH	12550238
	1-N22 1-N23	4.081	BRACE, TRANS	95-97	F (L36, M30)	RH	12550239
	1-N22 1-N23	4.081	BRACE, TRANS	96-97	F (L36, M49)	RH	12550239
18.		8.900	BOLT, HFH M10X1.5X30 10.9 FL BLK 21.5 OD 26MM THD POINTED (USED IN 3 REARWARD HOLES IN RH BRACE AND 2 REARWARD HOLES IN LH BRACE LWR)	95-97	F	5	12337993
		8.900	BOLT, HEX, M8X1.25X16, FULL, 9.8, PS (USED IN 2 FORWARD HOLES IN LH BRACE UPR)	95-97	F	2	11509589

RPO DEFINITIONS

L36 -- ENGINE GAS, 6 CYL, 3.8K, MFI, V6, HO (ERV6 SERIES)
M30 -- TRANSMISSION,AUTOMATIC 4 SPEED,4L60E,ELECTRONIC
M49 -- TRANSMISSION MAN 5 SPD, BORG WARNER. 77MM, 3.75 1ST, .76 5TH, O/D

cardiagn.com

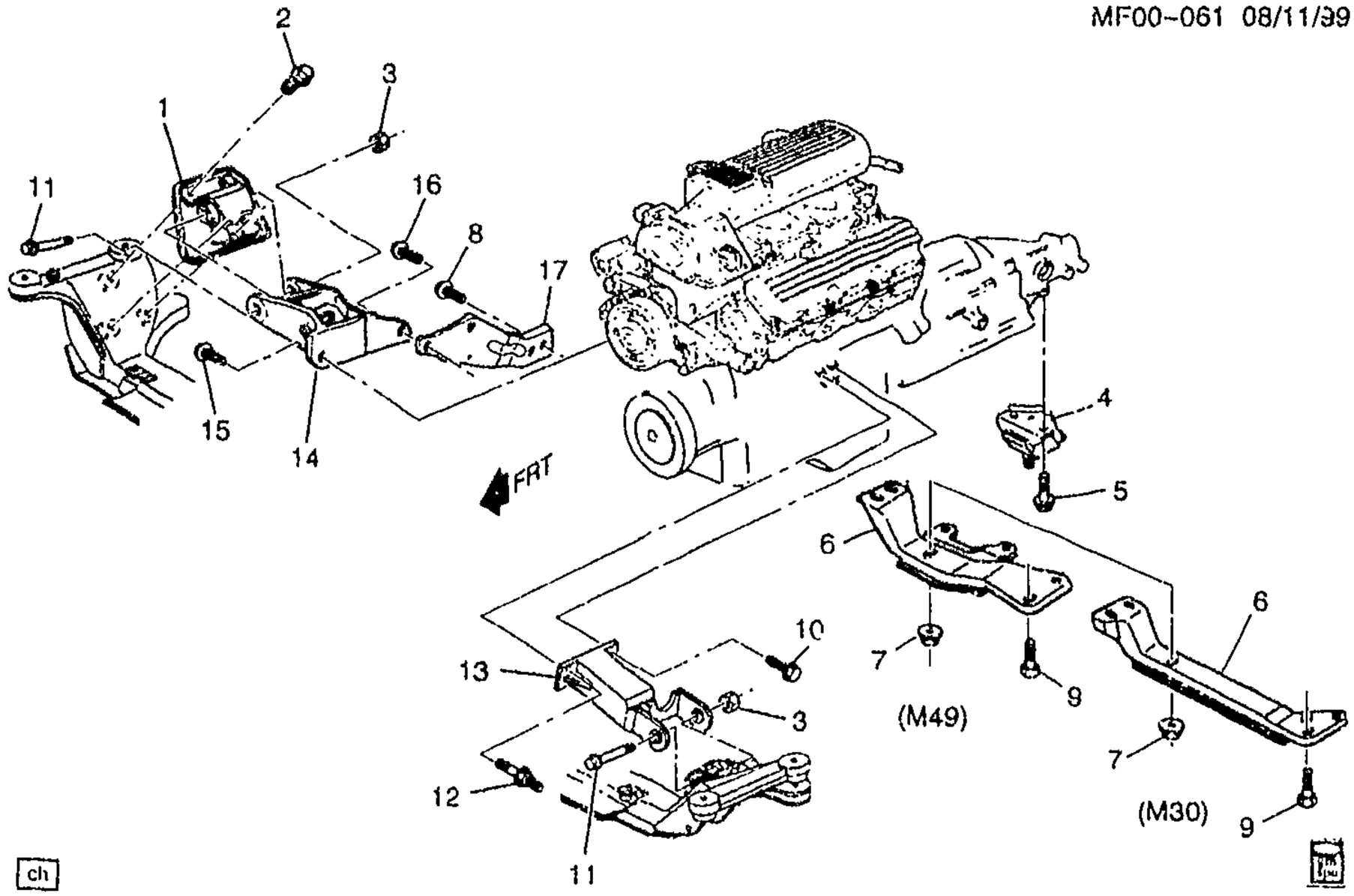

ch

MF00-061

1998-2002 F ENGINE & TRANSMISSION MOUNTING-V6 (L36/3.8K)

1.	1-E13	0.027	MOUNT, ENG	98-02	F (L36)	RH	22173129
	1-E13	0.027	MOUNT, ENG	98-02	F (L36)	LH	22173130
2.	1-E13	0.002	BOLT, ENG MT (HEX W/CON WA-10X1.5X25) (6.525)	98-02	F (L36)	6	1636817
3.		8.917	NUT, HEX FLG PREVAILING TORQ (M12X1.75X14) (ZO 10) (ENG MT)	98-02		2	11515744
4.	1-N22 1-N23	4.081	MOUNT, TRANS	98-02	F (L36)	1	22145293
5.	1-N24	4.085	BOLT, TRANS MT (HFH W/CON WA, M10X1.5X30, 22 THD, 10.9, 7112)	98-02	F	2	22570841
6.	1-N23	4.081	SUPPORT, TRANS	98-02	F (L36, M30)	1	10269725
	1-N22	4.081	SUPPORT, TRANS	98-02	F (L36, M49)	1	10269726
7.		8.915	NUT, HEX W/TT CON WA M10X1.5X10 24-OD 9 PC (TRANS MT) (8.917)	98-02		1	11516781
8.		8.900	BOLT, HFH M10X1.5X30 10.9 FL BLK 21.5 OD 26MM THD POINTED (3 USED IN REARWARD HOLES IN RH BRACE & 2 REARWARD HOLES IN LH BRACE LWR)	98-02		5	12337993
		8.900	BOLT, HEX, M8X1.25X16, FULL, 9.8, PS (USED IN 2 FORWARD HOLES IN LH BRACE UPR)	98-02		2	11509589

cardiagn.com

						MF00-061	
9.		8.900	BOLT, HEX HD W/CONICAL WA, M10X1.5X35, MACH, 10.9, PZ7112 (TRANS SUPT)	98-02	.....	4	11515946
10.		8.900	BOLT, HFH M12X1.5X25 9.8 PZOR (ENG MT BRKT)	98-02	.....	2	11515774
11.	1-E13	0.002	BOLT, ENG MT (12X1.75X140, 10.9)	98-02	F	1	11515458
12.	1-E14	0.029	STUD, ENG MT BRKT (ATCHS NEG BAT CBL; LH BRKT TO ENG)	98-02	F (L36)	1	10247276
13.	1-E14	0.029	BRACKET, ENG MT	98-02	F (L36)	LH	10274964
14.	1-E14	0.029	BRACKET, ENG MT	98-02	F (L36)	RH	10265186
15.		8.900	BOLT, HFH M12X1.5X25 9.8 PZOR (ENG MT BRKT)	98-02	.....	2	11515774
16.		8.900	BOLT, M10X1.5X32, 28.10 THD, 20.28 OD, 10.9, GM 7114M (TRANS BR) (AC-DELCO #179-2006)	98-02	.....	1	15726460
17.	1-N22 1-N23	4.081	BRACE, TRANS	98-02	F (L36, M49)	LH	12550238
	1-N23	4.081	BRACE, TRANS	98-02	F (L36, M30)	LH	12559608
	1-N22 1-N23	4.081	BRACE, TRANS	98-02	F (L36, M49)	RH	12550239
	1-N23	4.081	BRACE, TRANS	98-02	F (L36, M30)	RH	12559609

RPO DEFINITIONS
L36 – ENGINE GAS, 6 CYL, 3.8K, MFI, V6, HO (ERV6 SERIES)
M30 – TRANSMISSION,AUTOMATIC 4 SPEED,4L60E,ELECTRONIC
M49 – TRANSMISSION MAN 5 SPD, BORG WARNER, 77MM, 3.75 1ST, .76 5TH, O/D

cardiagn.com

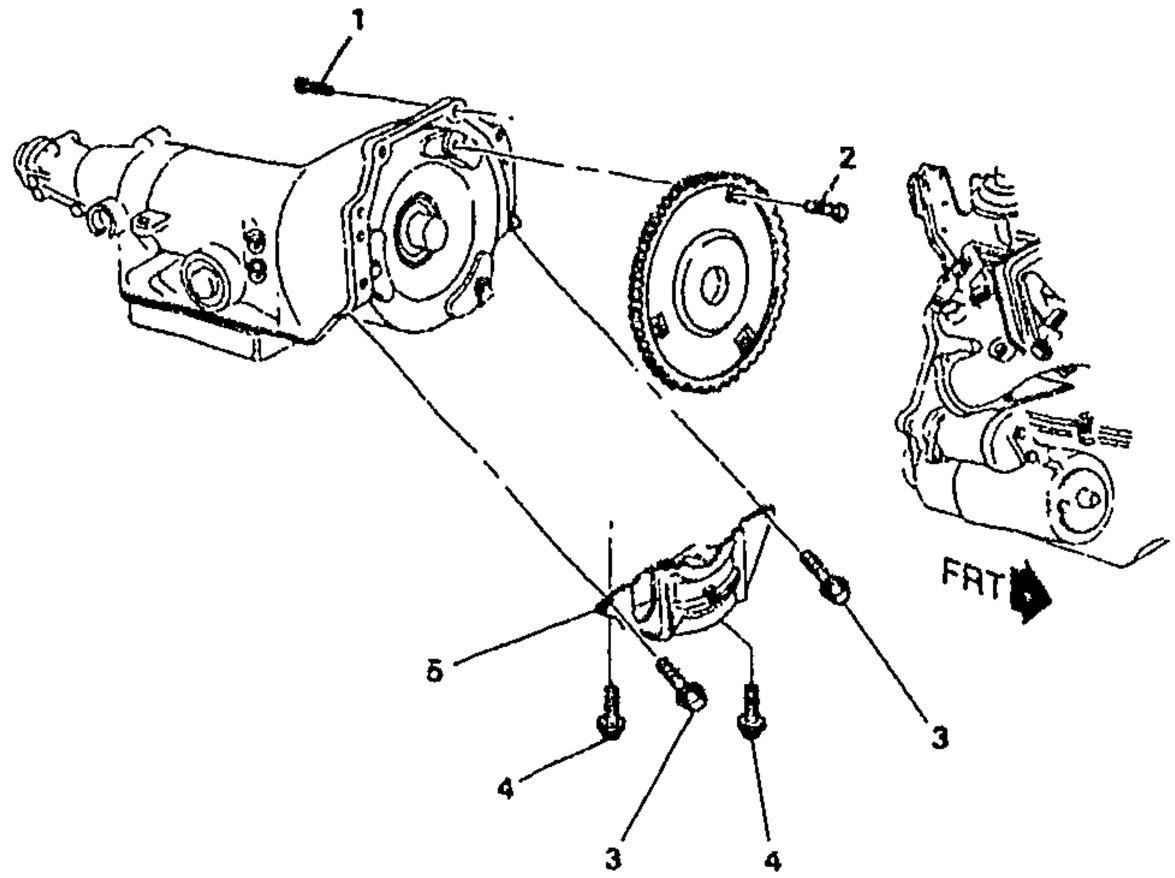

1k

MF00-038

1993 F COVER/TRANSMISSION CONVERTER (MD8)

1.	1-N23 1-N24	4.085	BOLT, TRANS (TRANS TO ENG) (TRANS) (HFH 3/8-16X1.38 280M PZOR) (8.900)	93 F (LT1, MD8)	4	9439918
2.	1-N24	4.115	BOLT, TRANS T/CV (M10X1.5X15 12.5 THD) (AC-DELCO #1261968)	93 F (MD8)	3	1261968
3.		8.900	BOLT (TRANS CONV CVR)	93 (L32, MD8)	2	11504596
		8.977	SCREW, HEX W/FLAT WA (TRANS CONV CVR)	93 (LT1, MD8)	2	12337828
4.		8.977	SCREW, HEX W/FLAT WA (TRANS CONV CVR)	93 (L32, MD8)	2	12337828
		8.977	SCREW, HEX W/FLAT WA (TRANS CONV CVR)	93 (LT1, MD8)	2	12337828
5.	1-L20	0.679	COVER, TRANS CONV	93 F (LT1, MD8)	1	10163828
	1-E22	0.679	COVER, TRANS CONV	93 F (L32, MD8)	1	14068706

RPO DEFINITIONS
LT1 - ENGINE-GAS, 8 CYL, 5.7L(5.7P),MFI,HO
L32 - ENGINE,3.4L,V6,(3.4S),SFI,OHV
MD8 - TRANSMISSION,AUTOMATIC 4-SPEED(THM700R4/4L60)

cardiagn.com

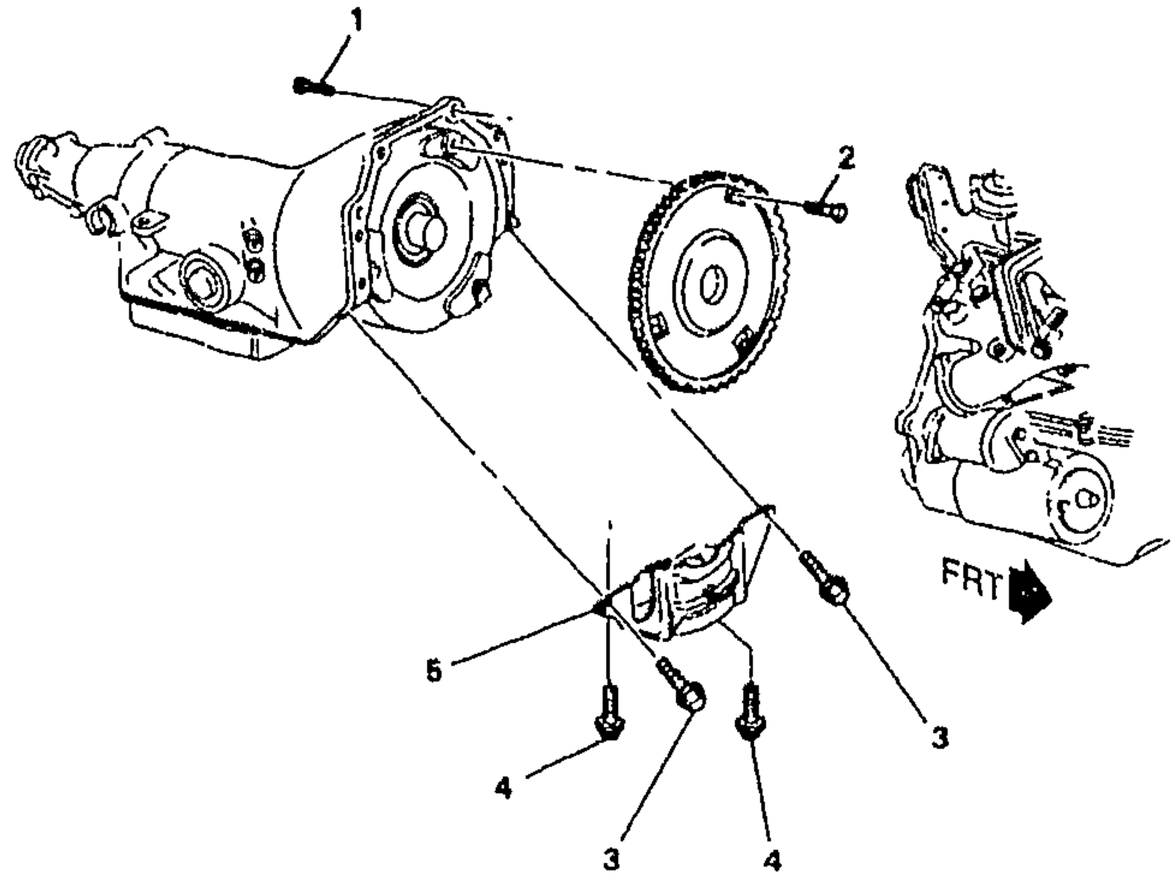

MF00-0381

1994–1995 F COVER/TRANSMISSION CONVERTER (L32,M30)
1994–1997 F COVER/TRANSMISSION CONVERTER (LT1,M30)

1.	1–N23 1–N24	4.085	BOLT, TRANS (TRANS TO ENG) (TRANS) (HFH 3/8–16X1.38 280M PZOR) (8.900)	94–97	F (LT1, M30)	4	9439918
2.	1–N24	4.115	BOLT, TRANS T/CV (M10X1.5X15 12.5 THD) (AC–DELCO #1261968)	94–97	F (M30)	3	1261968
3.		8.900	BOLT (TRANS CONV CVR)	94–95	(L32, M30)	2	11504596
		8.977	SCREW, HEX W/FLAT WA (TRANS CONV CVR)	94	(LT1, M30)	2	12337828
		8.900	BOLT (TRANS CONV CVR)	95–97	(LT1, M30)	2	11504596
4.		8.977	SCREW, HEX W/FLAT WA (TRANS CONV CVR)	94–95	(L32, M30)	2	12337828
		8.977	SCREW, HEX W/FLAT WA (TRANS CONV CVR)	94	(LT1, M30)	2	12337828
		8.900	BOLT (TRANS CONV CVR)	95–97	(LT1, M30)	2	11504596
5.	1–L20	0.679	COVER, TRANS CONV	94	F (LT1, M30)	1	10163828
	1–E22	0.679	COVER, TRANS CONV	94–95	F (L32, M30)	1	14068706
	1–L20	0.679	COVER, TRANS CONV (DUST CVR)	95	F (LT1, M30)	1	24201008
	1–L20	0.679	COVER, TRANS CONV (STEEL CVR)	96–97	F (LT1, M30)	1	12556637

RPO DEFINITIONS
LT1 – ENGINE–GAS, 8 CYL, 5.7L(5.7P),MFI,HO
L32 – ENGINE,3.4L,V6,(3.4S),SFI,OHV
M30 – TRANSMISSION,AUTOMATIC 4 SPEED,4L60E,ELECTRONIC

cardiagn.com

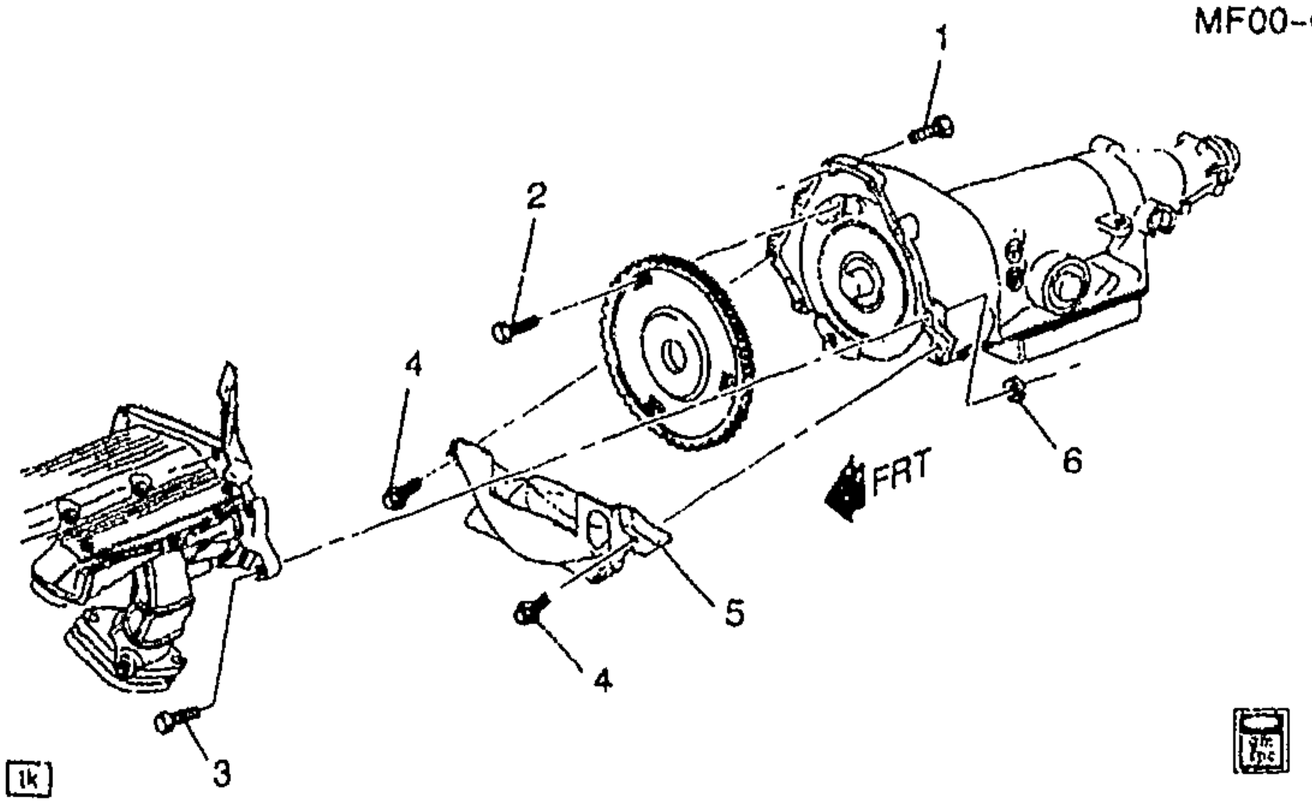

MF00-045

1995-1997 F COVER/TRANSMISSION CONVERTER (L36,M30)

1.	1-N22 1-N24	4.085	BOLT, TRANS (TRANS) (M12X1.75X45, 30 THD, 26.6 OD, 10.9) (8.900)	95-97	F	5 11515778
2.	1-N24	4.115	BOLT, TRANS T/CV (M10X1.5X15 12.5 THD) (AC-DELCO #1261968)	95-97	F (M30)	3 1261968
3.		8.900	BOLT, HFH M12X1.75X65 9.8 POR 26.6 OD DIM A-30 (TRANS)	95-97	F	1 11508580
4.		8.900	BOLT, HFH, M10X1.5X40, 26 THD, 10.9, POR (TRANS CONV CVR)	95-97		5 14050422
5.	1-E22	0.679	COVER, TRANS CONV (TRANS CONV CVR)	95-97	F (L36, M30)	1 24200761
6.		8.917	NUT, HEX FLG PREVAILING TORQ (M12X1.75X14) (ZO 10) (TRANS)	95-97	F	1 11515744

RPO DEFINITIONS
L36 - ENGINE GAS, 6 CYL, 3.8K, MFI, V6, HO (ERV6 SERIES)
M30 - TRANSMISSION,AUTOMATIC 4 SPEED,4L60E,ELECTRONIC

cardiagn.com

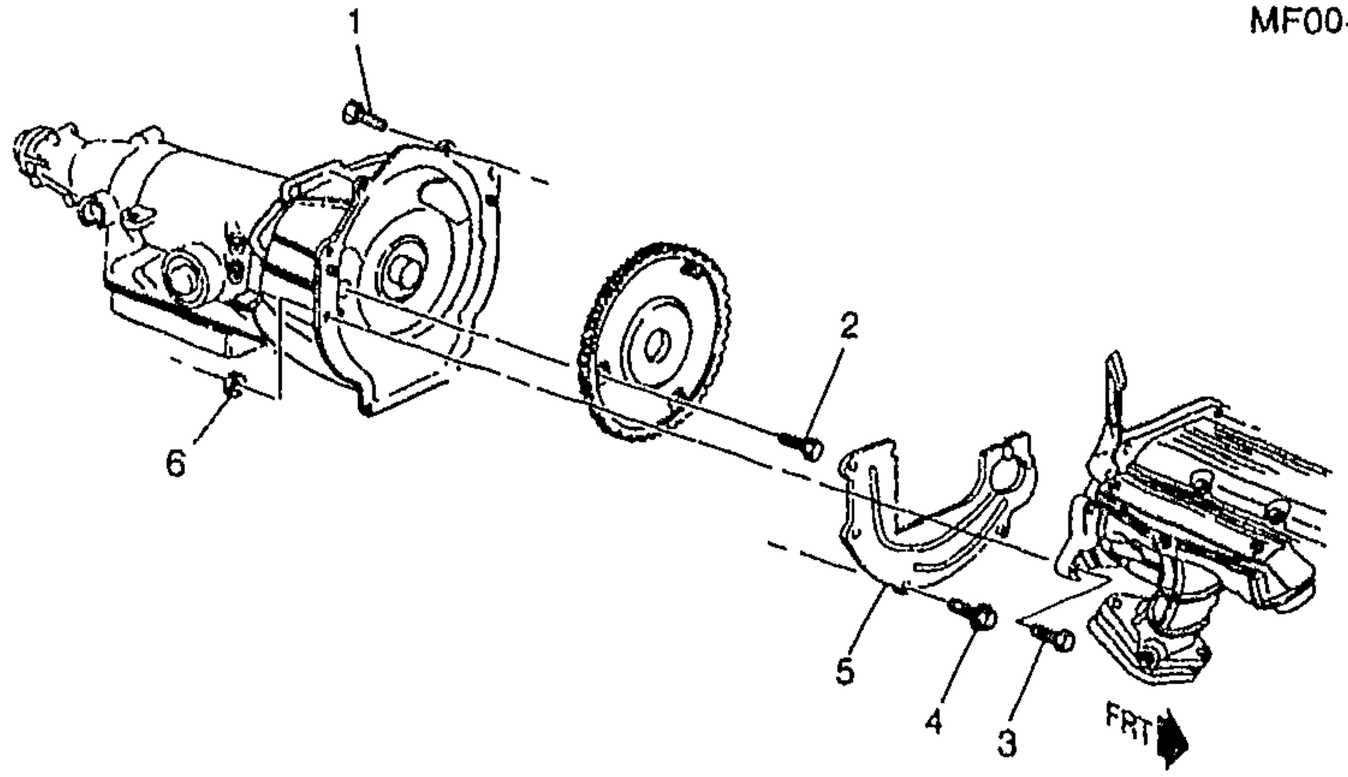

MF00-048

1998-2002 F COVER/TRANSMISSION CONVERTER (L36,M30)

1.	1-N22 1-N24	4.085	BOLT, TRANS (TRANS) (M12X1.75X45, 30 THD, 26.6 OD, 10.9) (8.900)	98-02	F	2	11515778
2.	1-N24	4.115	BOLT, TRANS T/CV (M10X1.5X15 12.5 THD) (AC-DELCO #1261968)	98	F (L36, M30)	3	1261968
	1-N24	4.115	BOLT, TRANS T/CV (M10X1.5X15 12.5 THD) (AC-DELCO #1261968)	99-02	F (L36, M30, M49)	3	1261968
3.		8.900	BOLT, HFH M12X1.75X65 9.8 POR 26.6 OD DIM A-30 (TRANS)	98-02	F	1	11508580
4.		8.977	SCREW, HEX W/FLAT WA (TRANS CONV CVR)	98-02		5	12337828
5.	1-E22	0.679	COVER, TRANS CONV (TRANS CONV CVR)	98-02	F (L36, M30)	1	12554995
6.		8.917	NUT, HEX FLG PREVAILING TORQ (M12X1.75X14) (ZO 10) (TRANS)	98-02	F	1	11515744

RPO DEFINITIONS
L36 - ENGINE GAS, 6 CYL, 3.8K, MFI, V6, HO (ERV6 SERIES)
M30 - TRANSMISSION,AUTOMATIC 4 SPEED,4L60E,ELECTRONIC
M49 - TRANSMISSION MAN 5 SPD, BORG WARNER, 77MM, 3.75 1ST, .76 5TH, O/D

cardiagn.com

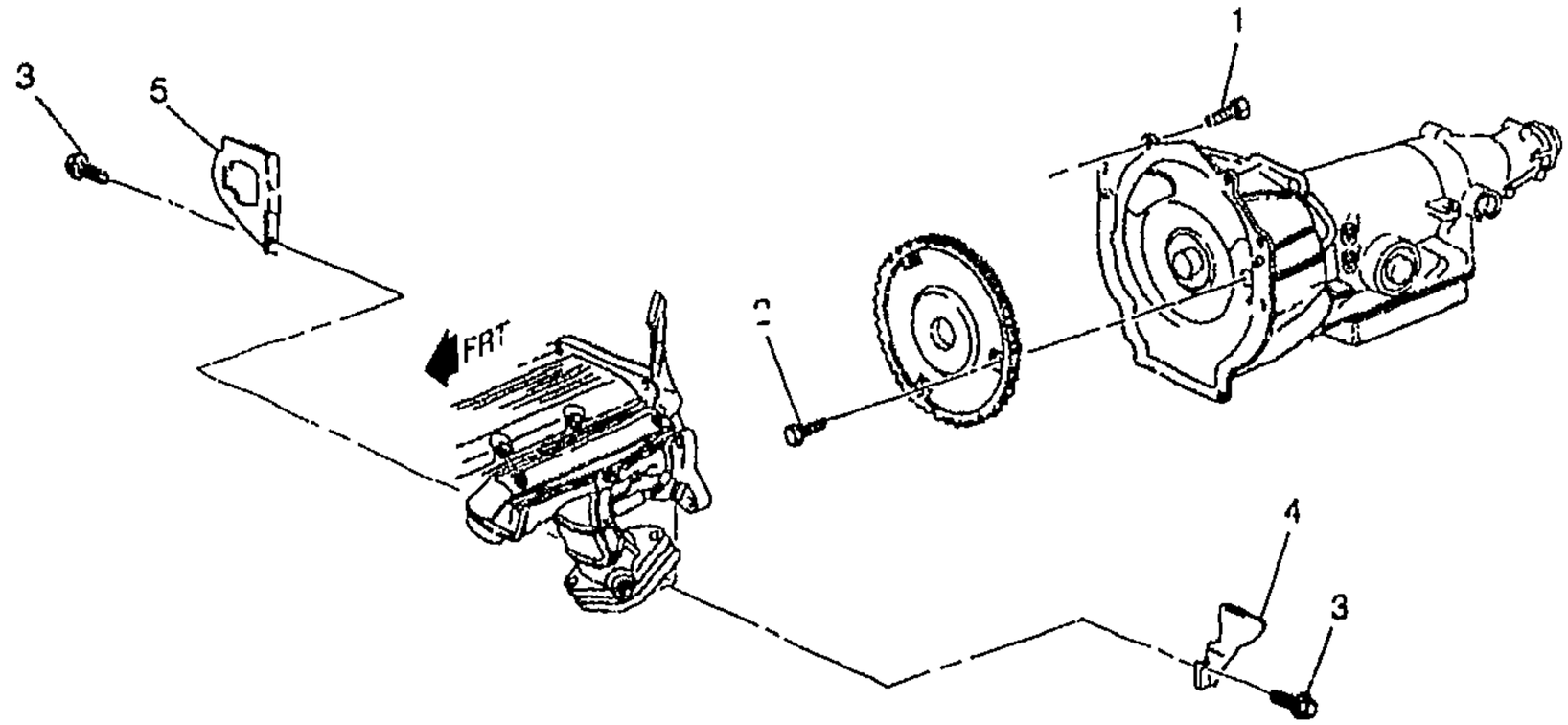

bk

MF00-055

1998-2002 F COVER/TRANSMISSION CONVERTER (LS1,M30)

1.		8.900	BOLT, HFH, M10X1.5X40, 26 THD, 10.9, POR (TRANS)	98-02	F (LS1, M30)	4	14050422
2.	1-N24	4.115	BOLT, TRANS T/CV (M10X1.5X23.0-G)	98-00	F (LS1, M30)	3	12560397
	1-N24	4.115	BOLT, TRANS T/CV (M10X1.5X22)	01-02	F (LS1, M30)	3	11519291
3.		8.900	BOLT/SCREW, HEX W/FL WA 17 OD, M6X1X20, 9.8, 4345M, DOG PT (TRANS)	98-02	F	1	11515704
4.	1-N23 1-N24	4.105	COVER, TRANS (TRANS CONV CVR) (AC-DELCO #12558718) .	98-02	F (LS1, M30)	LH	12558718
5.	1-N23 1-N24	4.105	COVER, TRANS (TRANS CONV CVR) (AC-DELCO #12561536) .	98-02	F (LS1, M30)	RH	12561536

RPO DEFINITIONS
LS1 – ENGINE GAS, 8 CYL, 5.7L, SFI, ALUMINUM ENGINE
M30 – TRANSMISSION,AUTOMATIC 4 SPEED,4L60E,ELECTRONIC

cardiagn.com

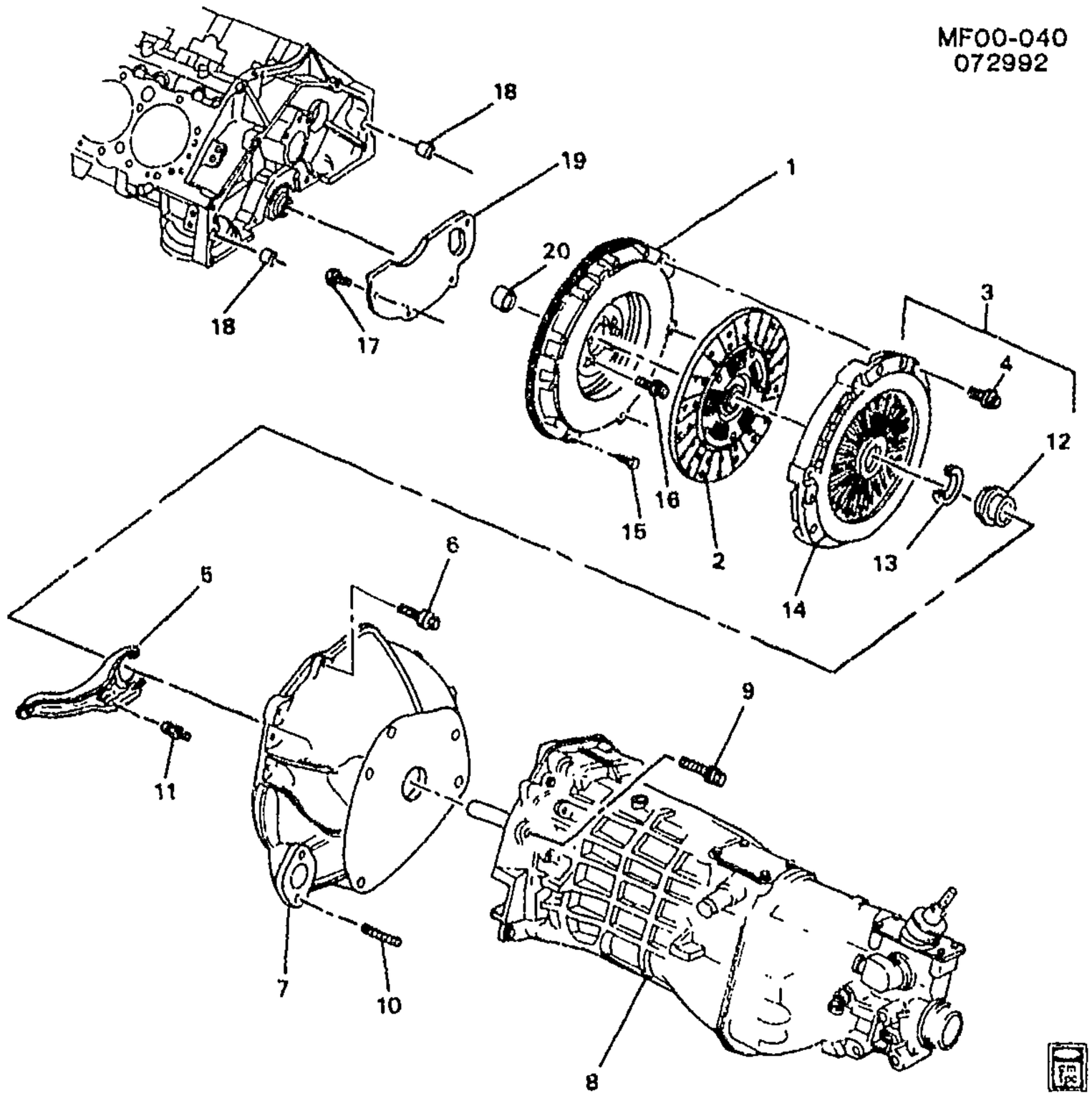

MF00-040

1993 F CLUTCH (M28,M29)

1.	1-L20	0.666	FLYWHEEL, ENG (153 TEETH) ..	93 F (LT1, M28, M29)	1	10125379
2.	1-L21	0.886	PLATE, CLU DRVN	93 F (LT1)	1	12551309
3.		N.S.	PLATE, CLU PRESS (W/CVR & CLU REL BRG)	.....		
4.	1-L21	0.862	BOLT, CLU PRESS PLT (HFH, 3/8-16X1.62, .38 THD, .378 SHLD TAPERED TO .375, 280M) .	93 F (LT1, M28, M29)	6	10079898
5.	1-L21	0.795	FORK, CLU REL (PART OF 8)	93 F (M28, M29)	1	12523312
6.		8.900	BOLT (TRANS) (3.275)	93 F	6	10198997
7.		N.S.	HOUSING, FLYWHL (PART OF 8)	.....		
8.	1-N22	4.003	TRANSMISSION, MAN (WHEN USING IN PLC OF 10142017, PROP SHF 12554456 MUST ALSO BE USED) (INCLS 5, 7, 9, 10, 11) (CODE DFH)	93 F (M28, GU2)	1	10236020

cardiagn.com

	1-N22	4.003	**TRANSMISSION**, MAN (WHEN USING IN PLC OF 10150060, PROP SHF 12554456 MUST ALSO BE USED) (INCLS 5, 7, 9, 10, 11)	93	F (M29, GU5)	1	10236021
9.		N.S.	**BOLT**, TRANS (PART OF 8)		.....		
10.		N.S.	**STUD**, CLU ACTR CYL (PART OF 8)		.....		
11.		N.S.	**STUD**, CLU FORK BALL (PART OF 8)		.....		
12.	1-L21	0.799	**BEARING**, CLU REL	93	F (LT1, M28, M29)	1	10085246
13.	1-L21	0.799	**RETAINER**, CLU REL BRG COLR	93	F (LT1, M28, M29)	1	10111569
14.	1-L21	0.859	**PLATE**, CLU PRESS (W/CVR) ...	93	F (LT1, M28, M29)	1	10207027
15.		8.940	**PIN**, GROOVE/F/.312X.375 CZ; 0.375" LENGTH (FLYWHL)	93	F	AR	274584
16.	1-L20	0.669	**BOLT**, FLYWHL (7/16-20 X 31/32)	93	F (LT1, M28, M29)	6	12337973
17.		8.977	**SCREW**, HEX W/FLAT WA (FLWHL HSG CVR)	93	F	4	12337828
18.		8.939	**PIN**, DOWEL STRAIGHT 5/8 DIA 1 3/16 LG (FLYWHL HSG LOC) ...	93	F	2	12338119
19.	1-L20	0.679	**COVER**, FLYWHL HSG	93	F (LT1, M28, M29)	1	10241153
20.	1-L20	0.649	**BEARING**, CLU PILOT	93	F (LT1)	1	14061685

RPO DEFINITIONS
GU2 – AXLE,REAR,2.73 RATIO
GU5 – AXLE,REAR,3.23 RATIO
LT1 – ENGINE-GAS, 8 CYL, 5.7L(5.7P),MFI,HO
M28 – TRANSMISSION MAN, 6 SPD, BORG WARNER, 85MM, 3.36 1ST, 1.35 3RD
M29 – TRANSMISSION MAN, 6 SPD, BORG WARNER, 85MM, 2.97 1ST, 1.44 3RD

cardiagn.com

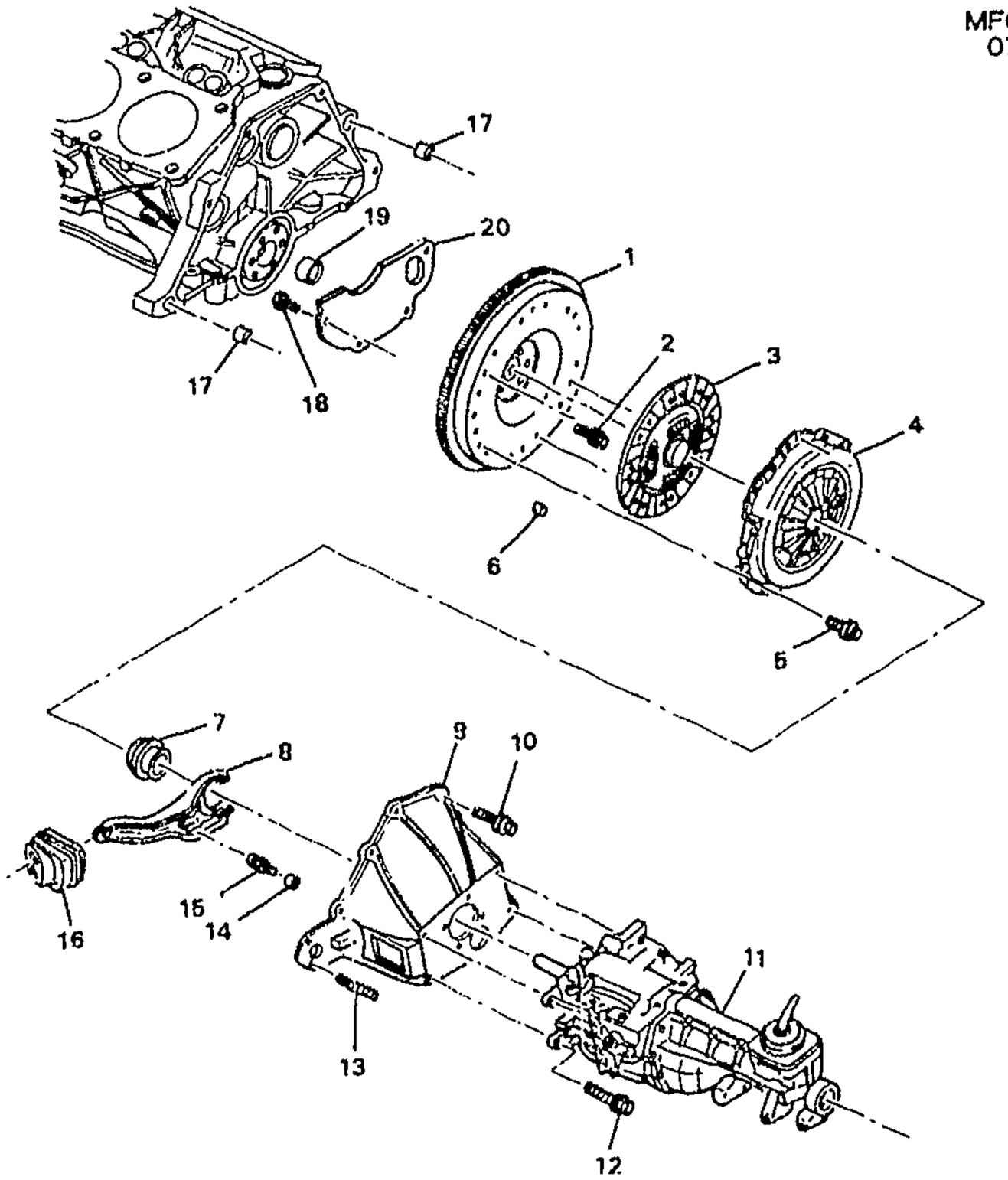

MF00-039

1993–1995 F CLUTCH (M49)

1.	1–E22	0.666	FLYWHEEL, ENG	93–95	F (L32, M49)	1	14100559
2.	1–E22	0.669	BOLT, FLYWHL (HEX, M10X1X23, 15.5 THD, 11.9, PC)	93–95	F (L32, M49)	6	476576
3.	1–E26	0.886	PLATE, CLU DRVN	94–95	F (L32, M49)	1	10235002
	1–E26	0.886	PLATE, CLU DRVN (IF USE IN PLC OF 10206756, 10235003 CLU PRESS PLT MUST ALSO BE USED)	93	F (L32, M49)	1	10235002
4.	1–E25	0.859	PLATE, CLU PRESS (W/CVR)	94–95	F (L32, M49)	1	10235003
	1–E25	0.859	PLATE, CLU PRESS (W/CVR) (IF USE IN PLC OF 10206756, 10235002 DRVN PLT MUST ALSO BE USED)	93	F (L32, M49)	1	10235003
5.	1–E26	0.862	BOLT, CLU PRESS PLT (M8X1.25X21.6, 19.8+HD, 10.9, PC) (8.900)	93–95	F (L32, M49)	6	24571667
6.		8.940	PIN, GROOVE/F/.312X.375 CZ; 0.375" LENGTH (FLYWHL)	93–95		AR	274584

cardiagn.com

7.	1-E25	0.799	**BEARING**, CLU REL (AC-DELCO #CT24KVAL)	93-95	F (L32, M49)	1	15613306
8.	1-E24	0.795	**FORK**, CLU	93-95	F (L32, M49)	1	10192223
9.	1-E23	0.683	**HOUSING**, FLYWHL (INCLS 13-15)	93-95	F (L32, M49)	1	10235487
10.		8.900	**BOLT**, HEX, M12X1.75X45, 30 THD, 10.9, POR (FLYWHL HSG) ..	93-95	.....	6	22649722
11.	1-N21	4.003	**TRANSMISSION**, MAN (WHEN USING IN PLC OF 10142016, ALSO USE SPEEDO GEAR 12550928) (SEE MANUAL TRANS ILLUSTRATION IN GRP. 4.000 FOR DETAILED VIEW.)	93-95	F (M49)	1	12533893
12.	1-N22	4.085	**BOLT**, TRANS (M12X1.75X40) ...	93-95	F (M49)	4	14056613
13.	1-E24	0.780	**STUD**, CLU ACTR CYL (PART OF 9) (0.777)	93-95	F (L32, M49)	2	10150004
14.		8.931	**WASHER**, (CLU FORK BALL STUD) (PART OF 9)	93-95	.....	1	9439514
15.	1-E25	0.798	**STUD**, CLU FORK BALL (PART OF 9) (M12 X1.75 THD 17.4 SPHER)	93-95	F (L32, M49)	1	15679715
16.	1-E25	0.797	**BOOT**, CLU FORK	93-95	F (M49)	1	14075724
17.	1-E23	0.685	**PIN**, TRANS LOC (19.5 MM X 18.5 MM)	93-95	F (L32, M49)	2	12338075
18.		8.977	**SCREW**, HEX W/FLAT WA (FLYWHL HSG CVR)	93-95	.....	4	12337828
19.	1-E21	0.649	**BEARING**, CLU PILOT	93-95	F (L32, M49)	1	476574
20.	1-E22	0.679	**COVER**, FLYWHL HSG	93-95	F (M49)	1	10192224

RPO DEFINITIONS
L32 – ENGINE,3.4L,V6,(3.4S),SFI,OHV
M49 – TRANSMISSION MAN 5 SPD, BORG WARNER, 77MM, 3.75 1ST, .76 5TH, O/D

cardiagn.com

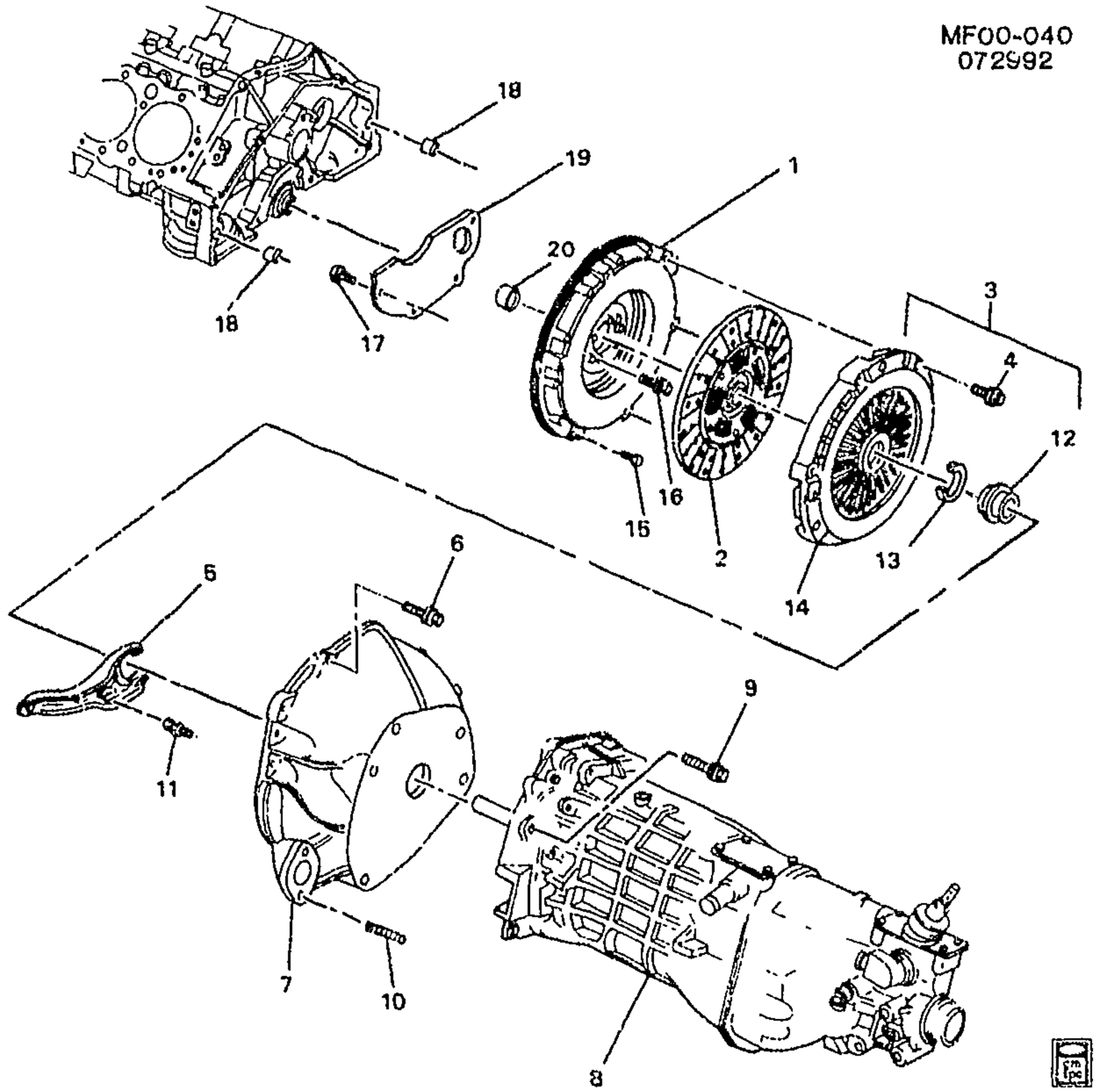

MF00-0401

1994–1997 F CLUTCH (MM6)

1.	1–L20	0.666	FLYWHEEL, ENG (153 TEETH) ..	94–97	F (LT1, MM6)	1	10125379
2.	1–L21	0.886	PLATE, CLU DRVN	94–97	F (LT1)	1	12551309
3.		N.S.	PLATE, CLU PRESS (W/CVR & CLU REL BRG)		.....		
4.	1–L21	0.862	BOLT, CLU PRESS PLT (HFH, 3/8–16X1.62, .38 THD, .378 SHLD TAPERED TO .375, 280M) .	94–97	F (LT1, MM6)	6	10079898
5.	1–L21	0.795	FORK, CLU REL (PART OF 8)	94–97	F (MM6)	1	12523312
6.		8.900	BOLT (TRANS) (3.275)	94–97	F	6	10198097
7.		N.S.	HOUSING, FLYWHL (PART OF 8)		.....		
8.	1–N22	4.003	TRANSMISSION, MAN (INCLS 5, 7, 9, 10, 11) (CODES DLD, DLF, DLK)	94–97	F (LT1, MM6)	1	12558016
9.		N.S.	BOLT, TRANS (PART OF 8)		.....		
10.		N.S.	STUD, CLU ACTR CYL (PART OF 8)		.....		
11.		N.S.	STUD, CLU FORK BALL (PART OF 8)		.....		

cardiagn.com

12.	1-L21	0.799	BEARING, CLU REL	94-97	F (LT1, MM6)	1	10085246
13.	1-L21	0.799	RETAINER, CLU REL BRG COLR	94-97	F (LT1, MM6)	1	10111569
14.	1-L21	0.859	PLATE, CLU PRESS (W/CVR) ...	94-97	F (LT1, MM6)	1	10207027
15.		8.940	PIN, GROOVE/F/.312X.375 CZ; 0.375" LENGTH (FLYWHL)	94-97	F	AR	274584
16.	1-L20	0.669	BOLT, FLYWHL (7/16-20 X 31/32)	94-97	F (LT1, MM6)	6	12337973
17.		8.977	SCREW, HEX W/FLAT WA (FLYWHL HSG)	94-97	F	4	12337828
18.		8.939	PIN, DOWEL STRAIGHT 5/8 DIA 1 3/16 LG (TRANS LOC)	94-97	F	2	12338119
19.	1-L20	0.679	COVER, FLYWHL HSG	94-97	F (LT1, MM6)	1	10241153
20.	1-L20	0.649	BEARING, CLU PILOT	94-97	F (LT1)	1	14061685

RPO DEFINITIONS
LT1 – ENGINE-GAS, 8 CYL, 5.7L(5.7P),MFI,HO
MM6 -- TRANSMISSION MAN 6 SPD, BORG WARNER, 85MM, 1ST 2.66, 6TH 0.50, O/D

cardiagn.com

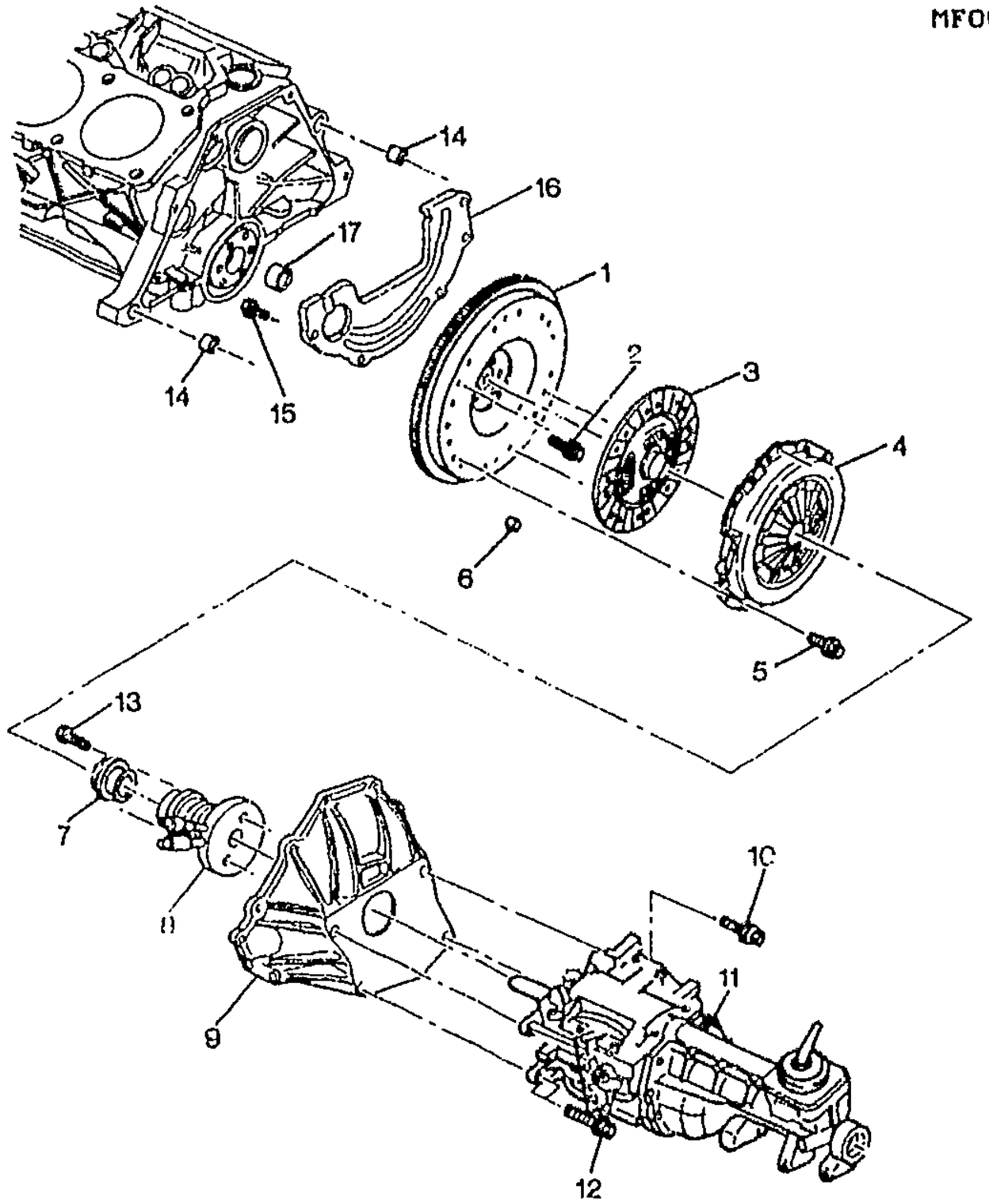

MF00-059

1996-2002 F CLUTCH (L36/3.8K)(M49)

1.	1-E22	0.666	FLYWHEEL, ENG	96-02	F (L36, M49)	1	24503285
2.	1-E22	0.669	BOLT, FLYWHL (TO CR/SHFT) ...	96-02	F (L36, M49)	8	24505092
3.	1-E26	0.886	PLATE, CLU DRVN	96-02	F (L36, M49)	1	12550237
4.	1-E25	0.859	PLATE, CLU PRESS (W/CVR) ...	96-97	F (L36, M49)	1	12555801
	1-E25	0.859	PLATE, CLU PRESS (W/CVR) ...	98-02	F (L36, M49)	1	12558351
5.	1-E26	0.862	BOLT, CLU PRESS PLT (M8X1.25X21.6, 19.8+HD, 10.9, PC) (8.900)	96-02	F (L36, M49)	6	24571667
6.		8.940	PIN, GROOVE/F/.312X.375 CZ; 0.375" LENGTH (FLYWHL)	96-02	.....	AR	274584
7.	1-E25	0.799	BEARING, CLU REL	96-02	F (L36, M49)	1	15705563
8.	1-E24	0.780	CYLINDER, CLU ACTR	96-99	F (L36, M49)	1	15046288
	1-E24	0.780	CYLINDER, CLU ACTR	00-02	F (L36, M49)	1	12560145
9.	1-E23	0.683	HOUSING, FLYWHL	96-02	F (L36, M49)	1	12555802

cardiagn.com

10.		8.900	**BOLT**, HEX, M12X1.75X45, 30 THD, 10.9, POR (FLYWHL HSG)	96–02		6	22649722
11.	1–N21	4.003	**TRANSMISSION**, MAN (SEE MANUAL TRANS ILLUSTRATION IN GROUP 4.000 FOR DETAILED VIEW)	96–02	F (M49)	1	10232236
12.	1–N22	4.085	**BOLT**, TRANS (M12X1.75X40)	96	F (M49)	4	14056613
	1–N22	4.085	**BOLT**, TRANS (HFH, M12X1.75X40) (8.900)	97–02	F (M49)	4	22651578
13.		8.900	**BOLT**, HEX M6X1X16 10.9 PL (CLU ACTR CYL)	96–02		2	11514753
14.	1–E23	0.685	**PIN**, TRANS LOC (19.5 MM X 18.5 MM)	96–02	F (L36, M49)	2	12338076
15.		8.977	**SCREW**, HEX W/FLAT WA (FLYWHL HSG CVR)	96–02		5	12337828
16.	1–E22	0.679	**COVER**, FLYWHL HSG	96–02	F (L36, M49)	1	12550235
17.	1–E21	0.649	**BEARING**, CLU PILOT	96–02	F (L36, M49)	1	24506531

RPO DEFINITIONS
L36 – ENGINE GAS, 6 CYL, 3.8K, MFI, V6, HO (ERV6 SERIES)
M49 – TRANSMISSION MAN 5 SPD, BORG WARNER, 77MM, 3.75 1ST, .76 5TH, O/D

cardiagn.com

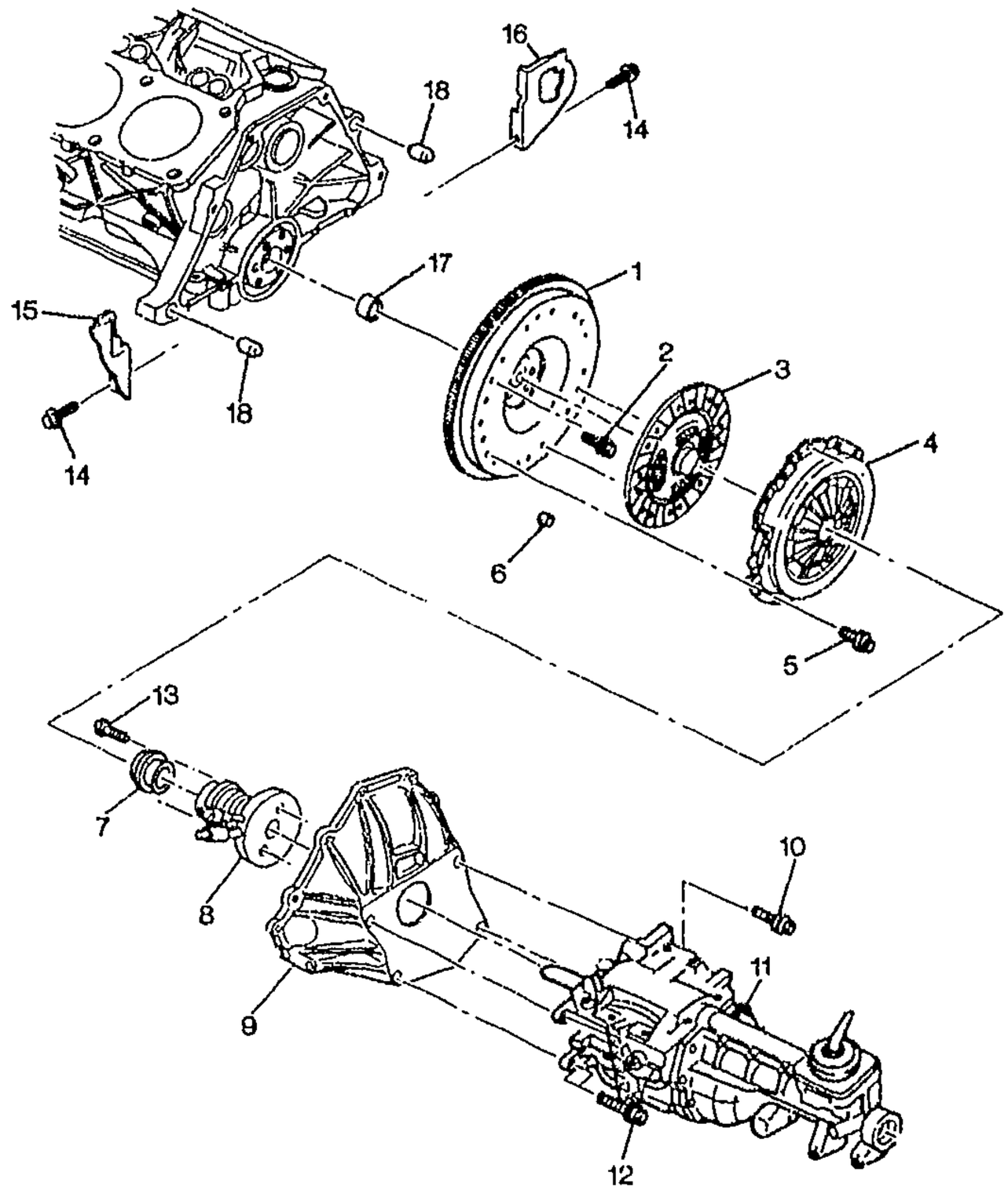

MF00-062

1998-2002 F CLUTCH (LS1,MM6)

1.	1-L20	0.666	FLYWHEEL, (W/CLU PRESS PLT) (INCLS 3, 4)	98-00	F (LS1, MM6)	1	12562765
	1-L21	0.863	FLYWHEEL, (W/CLU PRESS PLT) (INCLS 3, 4) (0.666)	98-00	F (LS1, MM6)	1	12562765
	1-L20	0.666	FLYWHEEL, (W/CLU PRESS PLT) (INCLS 3, 4)	01-02	F (LS1, MM6)	1	12570281
	1-L21	0.863	FLYWHEEL, (W/CLU PRESS PLT) (INCLS 3, 4) (0.666)	01-02	F (LS1, MM6)	1	12570281
2.	1-L20	0.669	BOLT, FLYWHL (HFH, M11X1.5X23.5, 21 THD, 22 O.D., 10.9, GM7114M, MACH, W/SEALANT)	98-02	F (LS1)	6	12553332
3.	1-L21	0.886	PLATE, CLU DRVN (PART OF 1)	98-00	F (LS1, MM6)	1	12562611
	1-L21	0.886	PLATE, CLU DRVN (PART OF 1)	01-02	F (LS1, MM6)	1	12570280

cardiagn.com

4.		N.S.	PLATE, CLU PRESS (PART OF 1)				
5.	1–L21	0.862	BOLT, CLU PRESS PLT (HEX FLG HD) (M10X1.5X30) (8.900)	98	F (LS1)	6	11516328
	1–L21	0.862	BOLT, CLU PRESS PLT (HFH M10X1.5X25 10.9 7114M HDR PT, 17.3 FLANGE)	98–02	F (LS1)	6	12561465
6.		8.940	PIN, GROOVE/F/.312X.375 CZ; 0.375" LENGTH (FLYWHL)	98–02	F	AR	274584
7.	1–E25	0.799	BEARING, CLU REL	98–02	F (LS1, MM6)	1	15705563
8.	1–E24	0.780	CYLINDER, CLU ACTR	98–99	F (LS1, MM6)	1	15046288
	1–E24	0.780	CYLINDER, CLU ACTR	00–02	F (LS1, MM6)	1	12565145
9.	1–L20	0.683	HOUSING, CLU	98–02	F (MM6)	1	12453263
10.		8.900	BOLT, HEX, M12X1.75X45, 30 THD, 10.9, POR (FLYWHL HSG)	98–02	F	6	22649722
11.	1–N22	4.003	TRANSMISSION, MAN (SEE MANUAL TRANS ILLUSTRATION IN GROUP 4.000 FOR DETAILED VIEW) (CODE DAX)	98	F (LS1, MM6)	1	12552099
	1–N22	4.003	TRANSMISSION, MAN (SEE MANUAL TRANS ILLUSTRATION IN GROUI 4.000 FOR DETAILED VIEW) (CODE DAX)	99–02	F (LS1, MM6) (EXC BBS)	1	12552099
	1–N22	4.003	TRANSMISSION, MAN (SEE MANUAL TRANS ILLUSTRATION IN GROUP 4.000 FOR DETAILED VIEW) (CODE DXA)	99–02	F (LS1, MM6, BBS)	1	12561561
12.		8.900	BOLT, HFH, M10X1.5X40, 26 THD, 10.9, POR (TRANS)	98–02		8	14050422
13.		8.900	BOLT, HFH M6X1X25, 9.8 7114M, 14.2OD HDR PT FULL THD (CLU ACTR CYL)	98–02		AR	11516424
14.		8.900	BOLT/SCREW, HEX W/FL WA 17 OD, M6X1X20, 9.8, 4345M, DOG PT (TRANS CVR)	98–02	F	2	11515704
15.	1–N23 1–N24	4.105	COVER, TRANS (AC–DELCO #12558718)	98–02	F (LS1, MM6)	LH	12558718
16.	1–N23 1–N24	4.105	COVER, TRANS (AC–DELCO #12561536)	98–02	F (LS1, MM6)	RH	12561536
17.	1–L20	0.649	BEARING, CLU PILOT	98–02	F (LS1, MM6)	1	14061685
18.		8.939	PIN, DOWEL STRAIGHT 5/8 DIA 1 3/16 LG (TRANS LOC)	98–02	F	2	12338119

RPO DEFINITIONS

BBS – KNOB SHIFTER HURST
LS1 – ENGINE GAS, 8 CYL, 5.7L, SFI, ALUMINUM ENGINE
MM6 – TRANSMISSION MAN 6 SPD, BORG WARNER, 85MM, 1ST 2.66, 6TH 0.50, O/D

cardiagn.com

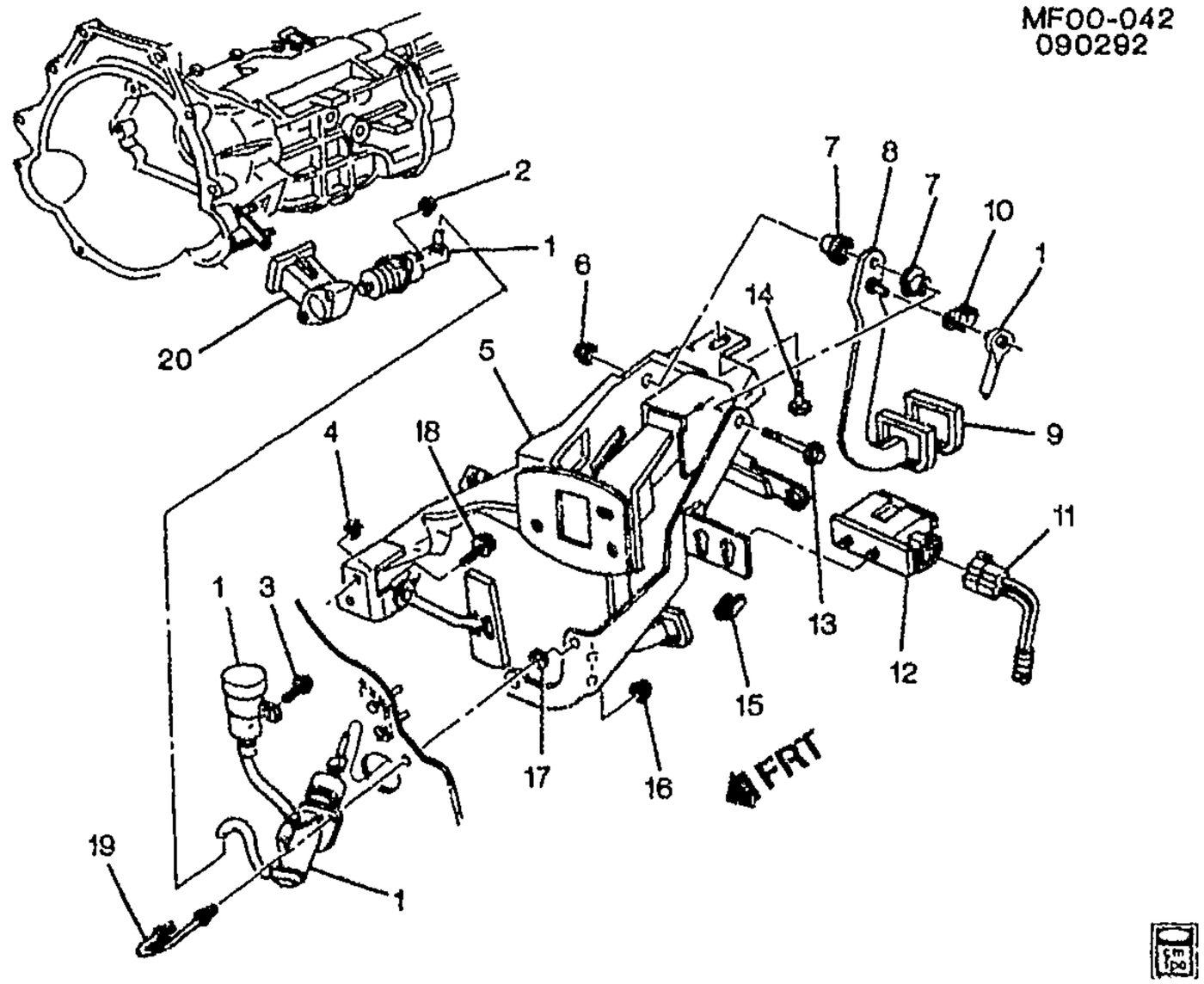

MF00-042

1993 F CLUTCH LINKAGE (M28,M29)

1.	1-E24	0.775	CYLINDER, CLU MAS & ACTR (I.D.BY TAG NUMBERS 10230433, 10242082, 12550386 OR 12557509.)	93	F (LT1)	1	12557509
	1-E24	0.775	CYLINDER, CLU MAS & ACTR (I.D.BY TAG NUMBERS 10230433, 10242082, 12550386 OR 12557509.)	93	F (L32)	1	12557509
2.		8.915	NUT, HEX W/CON WA M8X1.25X9.5 19-OD 9 ZP (CLU ACTR CYL) (8.917)	93		2	11506117
3.		8.950	RETAINER, FITS .250 HOLE, 1.01LG.700-OD NYLON BLACK (CLU M/CYL RSVR)	93		1	10121502
4.		8.917	NUT, M8X1.25X7.1, ZC 10 (BRK PED)	93		5	11515748
		8.929	WASHER, M8X24X2.3 (BRK PED)	93		5	11500323
5.	1-N26	4.625	PEDAL, BRK & ACCEL & CLU (W/BRKT) (INCLS 6-9, 13, 15)	93	F (M28)	1	10400399
	1-N26	4.625	PEDAL, BRK & ACCEL & CLU (W/BRKT) (INCLS 6-9, 13, 15)	93	F (M29)	1	10400399
	1-E25	0.830	PEDAL, BRK & ACCEL & CLU (W/BRKT) (INCLS 6-9, 13, 15) (4.625)	93	F (M28)	1	10400399

cardiagn.com

	1-N2	3.451	**PEDAL**, BRK & ACCEL & CLU (W/BRKT) (INCLS 6-9, 13, 15) (4.625)	93	F (M29)	1	10400399
6.	1-N26	4.634	**NUT**, BRK PED PIV (PART OF 5) (M10X1.5, GR10, CAD) (HEX) (8.917)	93	F	1	11501033
7.	1-E25	0.831	**BUSHING**, CLU PED PIV (PART OF 5) (4.626)	93	F (M28, M29)	2	14046812
8.	1-E25	0.832	**ARM**, CLU PED (PART OF 5)	93	F (M28, M29)	1	10283466
9.	1-N26	4.630	**PAD**, CLU PED (PART OF 5)	93	F	1	10254528
10.	1-E25	0.852	**RETAINER**, CLU PED LVR PIN (4.662)	93	F (M28, M29)	1	3817880
11.	1-N21 1-N22 1-N23	4.054	**CONNECTOR**, SW-CLU PED POSN (BLUE) (2-WAY F) (W/LEADS) (AC-DELCO #PT357)	93	F	1	12102690
12.	1-N21 1-N22	4.054	**SWITCH**, CLU PED POSN (AC--DELCO #D2214A)	93	F (M28)	1	14094368
13.		N.S.	**BOLT**, BRK PED PIV (PART OF 5)				
14.		8.900	**BOLT-HEX**, M8X1.25X30, 22 THD, 24MM OD, 9.8, 7114M (BRK PED BRKT)	93		1	11516594
15.	1-L21	0.829	**BUMPER**, CLU PED (PART OF 5)	93	F (M28, M29)	1	10254536
16.		8.917	**NUT**, M8X1.25X7.1, ZC 10 (CLU M/CYL)	93		2	11515748
		8.929	**WASHER**, M8X24X2.3 (CLU M/CYL)	93		2	11500323
17.		8.921	**NUT**, METRIC PUSH-ON BOLT RETAINING SPRING (CLU M/CYL)	93		1	10009923
18.		8.900	**BOLT**, HFH M8X1.25X18 (BRK PED BRKT)	93		1	11513703
19.	1-E24	0.777	**BOLT**, CLU M/CYL (U/BOLT W/SHLDR) (AC-DELCO #14076942)	93	F (M28, M29)	1	14076942
20.	1-L20	0.782	**BRACKET**, CLU ACTR CYL (0.829)	93	F (M28, M29)	1	12523315

RPO DEFINITIONS

LT1 – ENGINE-GAS, 8 CYL, 5.7L(5.7P),MFI,HO
L32 – ENGINE,3.4L,V6,(3.4S),SFI,OHV
M28 – TRANSMISSION MAN, 6 SPD, BORG WARNER, 85MM, 3.36 1ST, 1.35 3RD
M29 – TRANSMISSION MAN, 6 SPD, BORG WARNER, 85MM, 2.97 1ST, 1.44 3RD

cardiagn.com

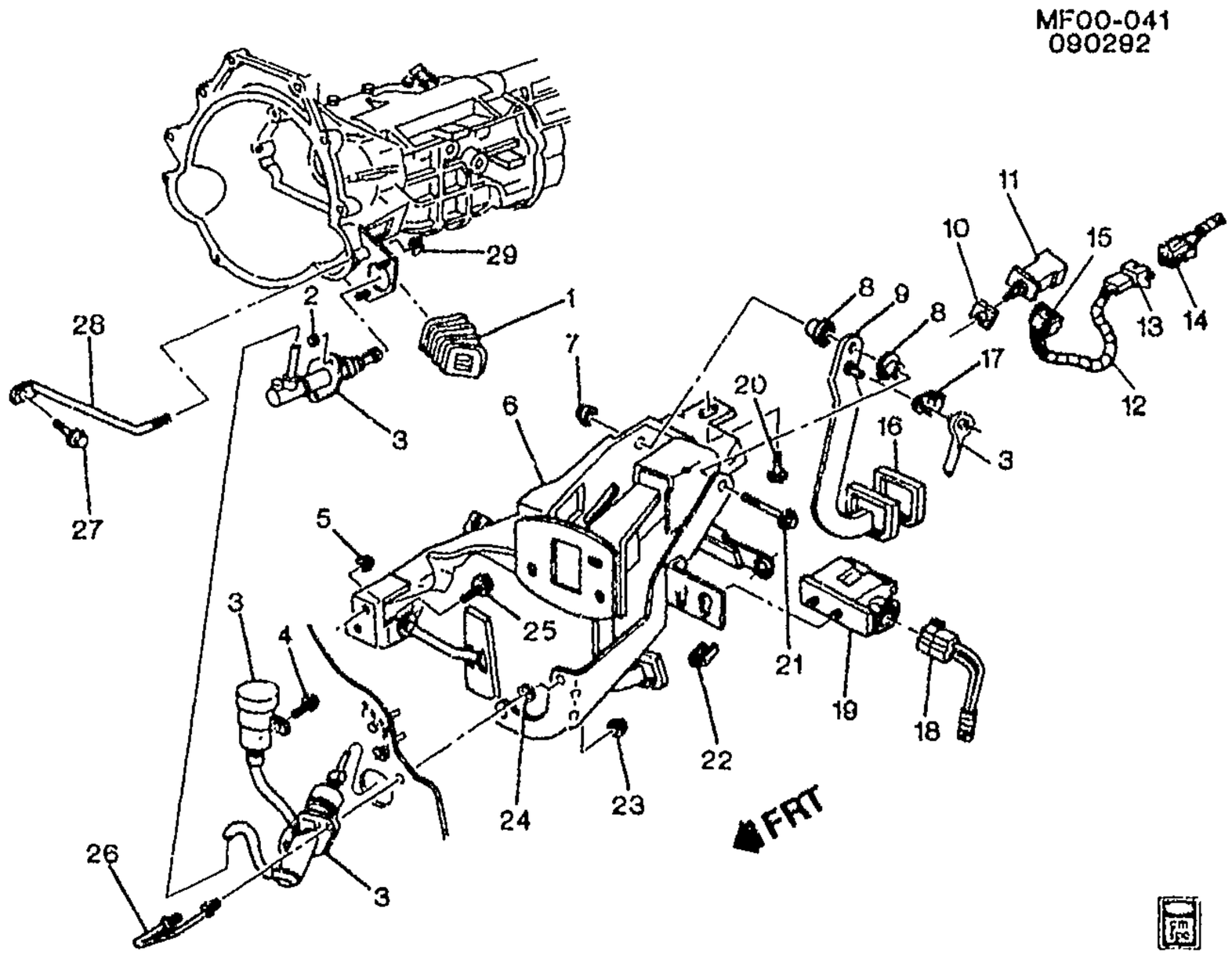

MF00-041

1993–1995 F CLUTCH LINKAGE (M49)

1.	1–E25	0.797	BOOT, CLU FORK	93–95	F (M49)	1	14075724
2.		8.915	NUT, HEX W/CON WA M8X1.25X9.5 19–OD 9 ZP (CLU ACTR CYL) (8.917)	93–95		2	11506117
3.	1–E24	0.775	CYLINDER, CLU MAS & ACTR (I.D.BY TAG NUMBERS 10230433, 10242082, 12550386 OR 12557509.)	93–94	F (LT1)	1	12557509
	1–E24	0.775	CYLINDER, CLU MAS & ACTR (I.D.BY TAG NUMBERS 10230433, 10242082, 12550386 OR 12557509.)	93–94	F (L32)	1	12557509
	1–E24	0.775	CYLINDER, CLU MAS & ACTR (I.D BY TAG NUMBER 10230433, 10242082, 12550386 OR 12557509. FOR 2ND DES SEE 12559912)	95	F (LT1) (1ST DES)	1	12557509
	1–E24	0.775	CYLINDER, CLU MAS & ACTR (I.D BY TAG NUMBER 10230433.10242082, 12550386 OR 12557509. FOR 2ND DES SEE 12559912)	95	F (L32) (1ST DES)	1	12557509

cardiagn.com

	1-E24	0.775	**CYLINDER**, CLU MAS & ACTR (I.D BY TAG NUMBER 12555293, 12551434 OR 12559912. FOR 1ST DES SEE 12557509)	95	F (LT1) (2ND DES)	1	12559912
	1-E24	0.775	**CYLINDER**, CLU MAS & ACTR (I.D BY TAG NUMBER 12555293, 12551434 OR 12559912. FOR 1ST DES SEE 12557509)	95	F (L32) (2ND DES)	1	12559912
4.		8.950	**RETAINER**, FITS .250 HOLE, 1.01LG.700-OD NYLON BLACK (CLU M/CYL RSVR)	93-95		1	10121502
5.		8.917	**NUT**, M8X1.25X7.1, ZC 10 (BRK PED)	93-95		5	11515748
		8.929	**WASHER**, M8X24X2.3 (BRK PED)	93-95		5	11500323
6.	1-N26	4.625	**PEDAL**, BRK & ACCEL & CLU (W/BRKT) (INCLS 7-9, 16, 21, 22)	93-95	F (M49)	1	10400399
	1-E25	0.830	**PEDAL**, BRK & ACCEL & CLU (W/BRKT) (INCLS 7-9, 16, 21, 22) (4.625)	93-95	F (M49)	1	10400399
7.	1-N26	4.634	**NUT**, BRK PED PIV (PART OF 6) (M10X1.5, GR10, CAD) (HEX) (8.917)	93-95	F	1	11501033
8.	1-E25	0.831	**BUSHING**, CLU PED PIV (PART OF 6) (4.626)	93-95	F (M49)	2	14046812
9.	1-E25	0.832	**ARM**, CLU PED (PART OF 6)	93-95	F (M49)	1	10283466
10.	1-N20	3.887	**RETAINER**, CRCONT REL SW (PART OF 11) (3.885)	93-95	F (K34)	1	10194431
11.	1-N20	3.883	**SWITCH**, CRCONT (INCLS 10) (W/RET) (3.887) (AC-DELCO #10195523)	93-95	F (M49, K34)	1	10195523
12.	1-N20	3.887	**HARNESS**, CRCONT WRG (INCLS 13, 15)	93	F (L32, M49)	1	12113914
	1-N20	3.887	**HARNESS**, CRCONT WRG (INCLS 13, 15) (TAPE BACK EXTRA CONN ON M30 APPLICATION)	94-95	F (L32, M49, K34)	1	12145111
	1-N20	3.887	**HARNESS**, CRCONT WRG (INCLS 13, 15)	94-95	F (L32, M49) (EXC K34)	1	12145112
13.		N.S.	**CONNECTOR**, INLINE-TO I/P HARN (PART OF 12)				
14.		N.S.	**CONNECTOR**, INLINE-TO I/P HARN				
15.	1-N20	3.887	**CONNECTOR**, SW-CRCONT REL (PART OF 12) (GRAY) (2-WAY F W/LEADS) (INDEX TAB CTR CAVITY A&B) (2.535) (AC-DELCO #PT217)	93	F	1	12101825
	1-N20	3.887	**CONNECTOR**, SW-CRCONT REL (PART OF 12) (4-WAY F) (W/LEADS) (9.764) (AC-DELCO #PT483)	93	F	1	12117350
	1-N20	3.887	**CONNECTOR**, SW-CRCONT REL (PART OF 12) (6-WAY F W/LEADS) (13.090) (AC-DELCO #PT1032)	93	F	1	15305888

cardiagn.com

	1-N20	3.887	**CONNECTOR**, SW-CRCONT REL (PART OF 12) (BLACK) (2-WAY F) (W/LEADS) (2.530) (AC-DELCO #PT733)	94-95	F	AR	12126463
16.	1-N26	4.630	**PAD**, CLU PED (PART OF 6)	93-95	F	1	10254528
17.	1-E25	0.852	**RETAINER**, CLU PED LVR PIN (4.662)	93-95	F (M49)	1	3817880
18.	1-N21 1-N22 1-N23	4.054	**CONNECTOR**, SW-CLU PED POSN (BLUE) (2-WAY F) (W/LEADS) (AC-DELCO #PT357)	93-95	F	1	12102690
19.	1-N21 1-N22	4.054	**SWITCH**, CLU PED POSN (AC-DELCO #D2214A)	93-95	F (M49)	1	14094368
20.		8.900	**BOLT-HEX**, M8X1.25X30, 22 THD, 24MM OD, 9.8, 7114M (BRK PED BRKT)	93-95		1	11516594
21.		N.S.	**BOLT**, BRK PED PIV (PART OF 6)				
22.	1-L21	0.829	**BUMPER**, CLU PED (PART OF 6)	93-95	F (M49)	1	10254536
23.		8.917	**NUT**, M8X1.25X7.1, ZC 10 (CLU M/CYL)	93-95		2	11515748
		8.929	**WASHER**, M8X24X2.3 (CLU M/CYL)	93-95		2	11500323
24.		8.921	**NUT**, METRIC PUSH-ON BOLT RETAINING SPRING (CLU M/CYL)	93-95		1	10009923
25.		8.900	**BOLT**, HFH M8X1.25X18 (BRK PED BRKT)	93-95		1	11513703
26.	1-E24	0.777	**BOLT**, CLU M/CYL (U/BOLT W/SHLDR) (AC-DELCO #14076942)	93-95	F (M49)	1	14076942
27.		8.900	**BOLT**, HFH M10X1.5X20 9.8 PZOR (TRANS BR)	93-95		1	11508202
28.	1-N22	4.081	**BRACE**, TRANS	93-95	F (L32, M49)	1	10192201
29.		8.915	**NUT**, HFH, 10X1.5 6H THD, 21.3 OD, 9.8 THK 13 HEX DR, GRD 9, ZF (TRANS BR) (8.917)	93-95		1	10255857

RPO DEFINITIONS

K34 – CRUISE CONTROL,AUTOMATIC,ELECTRONIC
LT1 – ENGINE-GAS, 8 CYL, 5.7L(5.7P),MFI,HO
L32 – ENGINE,3.4L,V6,(3.4S),SFI,OHV
M49 – TRANSMISSION MAN 5 SPD, BORG WARNER, 77MM, 3.75 1ST, .76 5TH, O/D

cardiagn.com

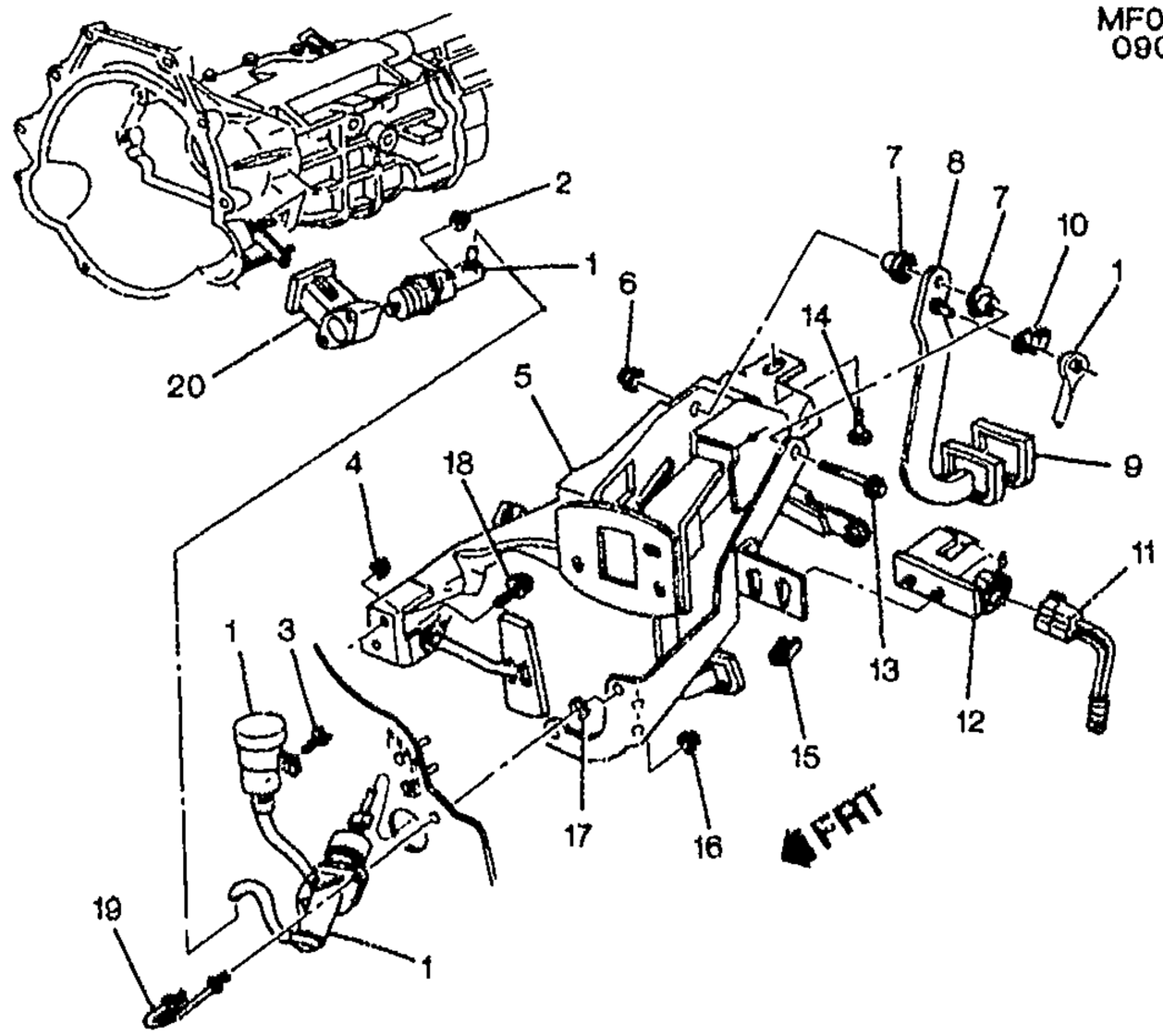

MF00-0421

1994–1997 F CLUTCH LINKAGE (MM6)

1.	1–E24	0.775	CYLINDER, CLU MAS & ACTR (I.D.BY TAG NUMBERS 10230433, 10242082, 12550386 OR 12557509.)	94	F (LT1)	1	12557509
	1–E24	0.775	CYLINDER, CLU MAS & ACTR (I.D.BY TAG NUMBERS 10230433, 10242082 12550386 OR 12557509.)	94	F (L32)	1	12557509
	1–E24	0.775	CYLINDER, CLU MAS & ACTR (I.D BY TAG NUMBER 10230433, 10242082, 12550386 OR 12557509. FOR 2ND DES SEE 12559912)	95	F (LT1) (1ST DES)	1	12557509
	1–E24	0.775	CYLINDER, CLU MAS & ACTR (I.D BY TAG NUMBER 10230433.10242082, 12550386 OR 12557509. FOR 2ND DES SEE 12559912)	95	F (L32) (1ST DES)	1	12557509
	1–E24	0.775	CYLINDER, CLU MAS & ACTR (I.D BY TAG NUMBER 12555293, 12551434 OR 12559912. FOR 1ST DES SEE 12557509)	95	F (LT1) (2ND DES)	1	12559912
	1–E24	0.775	CYLINDER, CLU MAS & ACTR (I.D BY TAG NUMBER 12555293, 12551434 OR 12559912. FOR 1ST DES SEE 12557509)	95	F (L32) (2ND DES)	1	12559912

cardiagn.com

	1-E24	0.775	**CYLINDER**, CLU MAS & ACTR (I.D. BY TAG NUMBERS 12555293, 12551434 OR 12559912.)	96-97	F (LT1)	1	12559912
2.		8.915	**NUT**, HEX W/CON WA M8X1.25X9.5 19-OD 9 ZP (CLU ACTR CYL) (8.917)	94-97		2	11506117
3.		8.950	**RETAINER**, FITS .250 HOLE, 1.01LG.700--OD NYLON BLACK (CLU M/CYL RSVR (PUSH IN))	94-97		1	10121502
4.		8.917	**NUT**, M8X1.25X7.1, ZC 10 (BRK PED)	94-97		5	11515748
		8.929	**WASHER**, M8X24X2.3 (BRK PED)	94-97		5	11500323
5.	1-N26	4.625	**PEDAL**, BRK & ACCEL & CLU (W/BRKT) (INCLS 6-9, 13, 15)	94-97	F (MM6)	1	10400399
	1-E25	0.830	**PEDAL**, BRK & ACCEL & CLU (W/BRKT) (INCLS 6-9, 13, 15) (4.625)	94-97	F (MM6)	1	10400399
6.	1-N26	4.634	**NUT**, BRK PED PIV (PART OF 5) (M10X1.5, GR10, CAD) (HEX) (8.917)	94-96	F	1	11501033
	1-N26	4.634	**NUT**, BRK PED PIV (PART OF 5) (M10X1.5) (HEX PRVL TORQ) (8.917)	97	F	1	11516072
7.	1-E25	0.831	**BUSHING**, CLU PED PIV (PART OF 5) (4.626)	94-97	F (MM6)	2	14046812
8.	1-E25	0.832	**ARM**, CLU PED (PART OF 5)	94-97	F (MM6)	1	10283466
9.	1-N26	4.630	**PAD**, CLU PED (PART OF 5)	94-97	F	1	10254528
10.	1-E25	0.852	**RETAINER**, CLU PED LVR PIN (4.662)	94-97	F (MM6)	1	3817880
11.	1-N21 1-N22 1-N23	4.054	**CONNECTOR**, SW-CLU PED POSN (BLUE) (2-WAY F) (W/LEADS) (AC-DELCO #PT357)	94-97	F	1	12102690
12.	1-N21 1-N22	4.054	**SWITCH**, CLU PED POSN (AC-DELCO #D2214A)	94-97	F (MM6)	1	14094368
13.		N.S.	**BOLT**, BRK PED PIV (PART OF 5)				
14.		8.900	**BOLT-HEX**, M8X1.25X30, 22 THD, 24MM OD, 9.8, 7114M (BRK PED BRKT)	94-97		1	11516594
15.	1-L21	0.829	**BUMPER**, CLU PED (PART OF 5)	94-97	F (MM6)	1	10254536
16.		8.917	**NUT**, M8X1.25X7.1, ZC 10 (CLU M/CYL)	94-97		2	11515748
		8.929	**WASHER**, M8X24X2.3 (CLU M/CYL)	94-97		2	11500323
17.		8.921	**NUT**, METRIC PUSH-ON BOLT RETAINING SPRING (CLU M/CYL)	94-97		1	10009823
18.		8.900	**BOLT**, HFH M8X1.25X18 (BRK PED BRKT)	94-97		1	11513703
19.	1-E24	0.777	**BOLT**, CLU M/CYL (U/BOLT W/SHLDR) (AC-DELCO #14076942)	94-97	F (MM6)	1	14076942
20.	1-L20	0.782	**BRACKET**, CLU ACTR CYL (0.829)	94-97	F (MM6)	1	12523315

RPO DEFINITIONS
LT1 - ENGINE-GAS, 8 CYL, 5.7L(5.7P)MFI HO

cardiagn.com

L32 – ENGINE,3.4L,V6,(3.4S),SFI,OHV
MM6 – TRANSMISSION MAN 6 SPD, BORG WARNER, 85MM, 1ST 2.66, 6TH 0.50, O/D

cardiagn.com

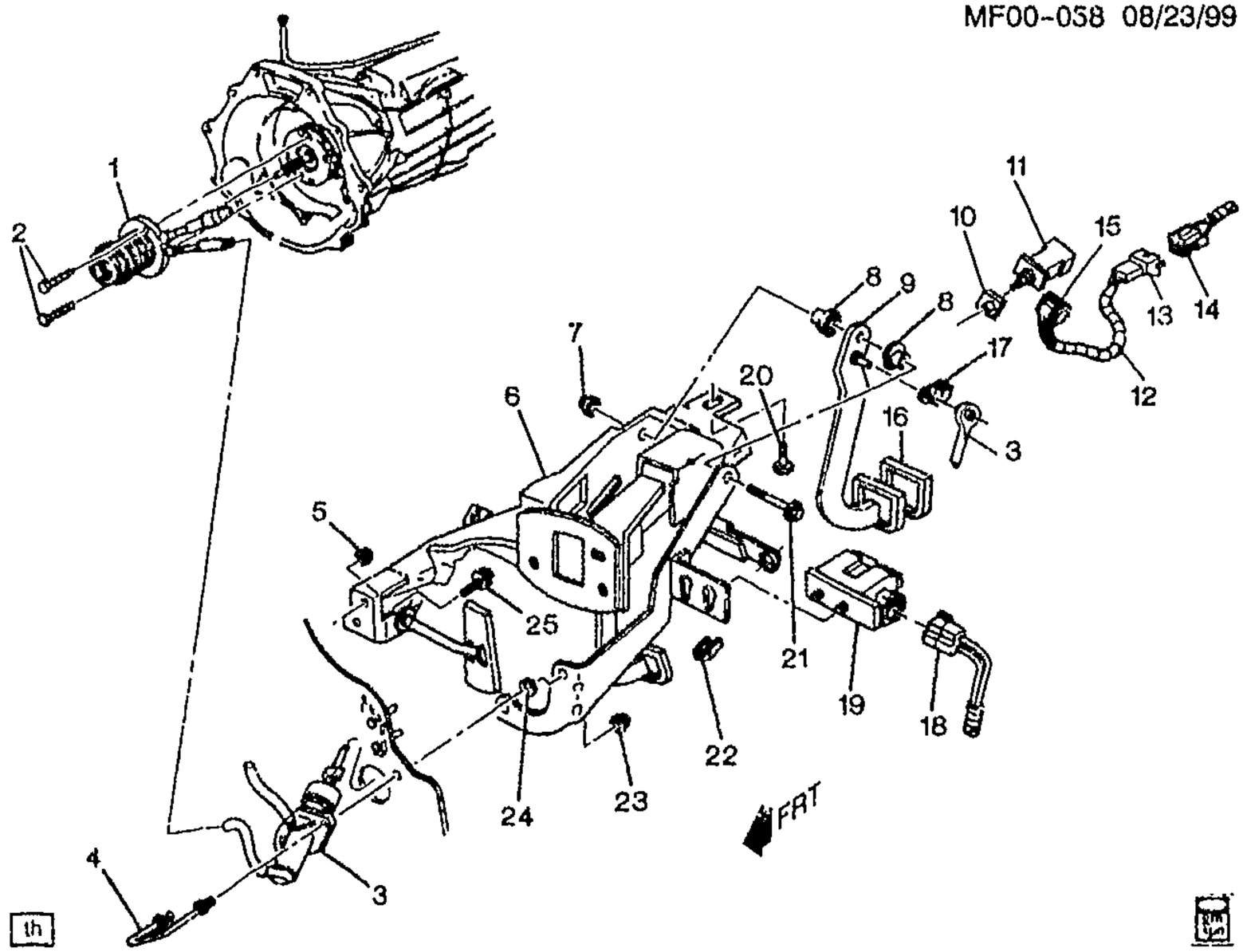

MF00-058

1996–2002 F CLUTCH LINKAGE (L36,M49)

1.	1–E24	0.775	CYLINDER, CLU MAS	96–97	F (L36)	1	12559911
	1–E24	0.775	CYLINDER, CLU MAS (INCL RESERVOIR)	98–00	F (L36, M49)	1	12561178
	1–E24	0.775	CYLINDER, CLU MAS (INCL RESERVOIR)	01–02	F (L36, M49)	1	12565144
	1–E24	0.775	CYLINDER, CLU MAS (5 & 6 SPD TRANS) (AC–DELCO #18M2232)	96–97	F	1	18039186
2.		8.900	BOLT, HEX M6X1X16 10.9 PL (CLU ACTR CYL)	96–02		2	11514753
3.	1–E24	0.775	CYLINDER, CLU MAS	96–97	F (L36)	1	12559911
	1–E24	0.775	CYLINDER, CLU MAS (INCL RESERVOIR)	98–00	F (L36, M49)	1	12561178
	1–E24	0.775	CYLINDER, CLU MAS (INCL RESERVOIR)	01–02	F (L36, M49)	1	12565144
	1–E24	0.775	CYLINDER, CLU MAS (5 & 6 SPD TRANS) (AC–DELCO #18M2232)	96–97	F	1	18039186
4.	1–E24	0.777	BOLT, CLU M/CYL (U/BOLT W/SHLDR) (AC–DELCO #14076942)	96–02	F (M49)	1	14076942
5.		8.917	NUT, HEX M8–1.25 TORQ PRVG 10 (BRK PED)	96		5	11502611
		8.917	NUT, HFH, M8X1.25X8.8, 17.9 OD, 10 DIN, PREV TORQUE (BRK PED)	97–02		5	11517031

cardiagn.com

6.	1-N26	4.625	**PEDAL**, BRK & ACCEL & CLU (W/BRKT) (INCLS 7-9, 16, 21, 22)	96-97	F (M49)	1	10400399
	1-E25	0.830	**PEDAL**, BRK & ACCEL & CLU (W/BRKT) (INCLS 7-9, 16, 21, 22) (4.625)	96-97	F (M49)	1	10400399
	1-N26	4.625	**PEDAL**, BRK & ACCEL & CLU (W/BRKT) (INCLS 7-9, 16, 21, 22) (INCLUDES PAD, ARM, PEDAL, SPRING, PIN, NUT, BUSHING, RETAINER)	98	F (M49)	1	10400451
	1-E25	0.830	**PEDAL**, BRK & ACCEL & CLU (W/BRKT) (INCLS 7-9, 16, 21, 22) (INCLUDES PAD, ARM, PEDAL, SPRING, PIN, NUT, BUSHING, RETAINER) (4.625)	98	F (M49)	1	10400451
	1-N26	4.625	**PEDAL**, BRK & CLU (W/BRKT) (INCLS 7-9, 16, 21, 22)	99-02	F (L36, M49)	1	10298616
7.	1-N26	4.634	**NUT**, BRK PED PIV (PART OF 6) (M10X1.5, GR10, CAD) (HEX) (8.917)	96	F	1	11501033
	1-N26	4.634	**NUT**, BRK PED PIV (PART OF 6) (M10X1.5) (HEX PRVL TORQ) (8.917)	97-02	F	1	11516072
8.	1-E25	0.831	**BUSHING**, CLU PED PIV (PART OF 6) (4.626)	96-02	F (M49)	2	14046812
9.	1-E25	0.832	**ARM**, CLU PED (PART OF 6)	96-97	F (M49)	1	10283466
	1-E25	0.832	**ARM**, CLU PED (PART OF 6)	98-02	F (M49)	1	10401021
10.	1-N20	3.885	**RETAINER**, CRCONT VAC REL VLV (PART OF 11)	96-98	F	1	10194431
	1-N21 1-N22	4.054	**RETAINER**, M/TRNS SHFT ANTICIPATE SW (3.885)	99-02	F (M49)	1	10194431
11.	1-N20	3.883	**SWITCH**, CRCONT (INCLS 10) (W/RET) (3.887) (AC-DELCO #10195523)	96-98	F (M49, K34)	1	10195523
	1-N21 1-N22	4.054	**SWITCH**, M/TRNS SHFT ANTICIPATE (W/O RETAINER)	99-02	F (M49)	1	10180569
12.	1-N20	3.887	**HARNESS**, CRCONT WRG (INCLS 13, 15) (TAPE BACK EXTRA CONN ON M30 APPLICATION)	96-98	F (L36, M49, K34)	1	12145111
	1-N20	3.887	**HARNESS**, CRCONT WRG (INCLS 13, 15)	96-98	F (L36, M49) (EXC K34)	1	12145112
	1-N20	3.887	**HARNESS**, CRCONT WRG (INCLS 13, 15) (TAPE BACK EXTRA CONN ON M30 APPLICATION)	99-02	F (L36, M30)	1	12145111
	1-N20	3.887	**HARNESS**, CRCONT WRG (INCLS 13, 15) (TAPE BACK EXTRA CONN ON M30 APPLICATION)	99-02	F (M49, K34)	1	12145111
13.	1-M15	2.530	**CONNECTOR**, INLINE-TO I/P HARN (PART OF 12) (GRAY) (6-WAY F W/LEADS) (4.663)	96-02	F	1	12125665
	1-M15	2.530	**CONNECTOR**, INLINE-TO I/P HARN (PART OF 12) (6-WAY F W/LEADS) (13.090) (AC-DELCO #PT1032)	96-98	F	1	15305888

cardiagn.com

					MFGU-058	
1-M15	2.530	CONNECTOR, INLINE-TO I/P HARN (PART OF 12) (3-WAY F) (W/LEADS) (2.535) (AC-DELCO #PT126)	96-97	F87	AR	12085505
1-M15	2.530	CONNECTOR, INLINE-TO I/P HARN (PART OF 12) (NATURAL) (2-WAY F) (W/LEADS) (2.535) (AC-DELCO #PT213)	96	F	1	12101821
1-M15	2.530	CONNECTOR, INLINE-TO I/P HARN (PART OF 12) (10-WAY F W/LEADS) (2.535) (AC-DELCO #PT150)	96-02	F	1	12101762
1-M15	2.530	CONNECTOR, INLINE-TO I/P HARN (PART OF 12) (BLUE) (10-WAY F) (W/LEADS) (AC PT224) (2.535) (AC-DELCO #PT224)	96-02	F	1	12101832
1-M15	2.530	CONNECTOR, INLINE-TO I/P HARN (PART OF 12) (GRAY) (8-WAY F) (W/LEADS) (2.535) (AC-DELCO #PT214)	97-02	F	1	12101822
1-M15	2.530	CONNECTOR, INLINE-TO I/P HARN (PART OF 12) (2-WAY F W/LEADS, W/INDEX TAB OTR EDGE OF CAVITY B) (2.535) (AC-DELCO #PT146)	98	F	1	12085535
1-M15	2.530	CONNECTOR, INLINE-TO I/P HARN (PART OF 12) (NATURAL) (2-WAY F) (W/LEADS) (2.535) (AC-DELCO #PT213)	98-02	F (AQ9)	1	12101821
1-M15	2.530	CONNECTOR, INLINE-TO I/P HARN (PART OF 12) (W/LEADS) (4.022) (AC-DELCO #LS28)	98	F	1	12125966
1-M15	2.530	CONNECTOR, INLINE-TO I/P HARN (PART OF 12) (4-WAY F, W/O LEADS) (9.709)	98-02	F (L36, LS1)	1	12129136
1-M15	2.530	CONNECTOR, INLINE-TO I/P HARN (PART OF 12) (W/O LEADS)	96-02	F (L36)	1	12162504
1-M15	2.530	CONNECTOR, INLINE-TO I/P HARN (PART OF 12) (4-WAY F) (M/P 150) (W/LEADS) (13.100) (AC-DELCO #PT1025)	98-02	F	1	15305883
1-M15	2.530	CONNECTOR, INLINE-TO I/P HARN (PART OF 12) (BLACK) (2-WAY F W/LEADS) (2.535) (AC-DELCO #PT159)	98-02	F87	1	12101888
1-M15	2.530	CONNECTOR, INLINE-TO I/P HARN (PART OF 12) (2-WAY M W/LEADS) (12.243) (AC-DELCO #PT1227)	96-02	F (M49)	1	15306065
1-M15	2.530	CONNECTOR, INLINE-TO I/P HARN (PART OF 12) (2-WAY F W/LEADS, W/INDEX TAB OTR EDGE OF CAVITY B) (2.535) (AC-DELCO #PT146)	02	F (T79)	1	12085535

cardiagn.com

	1-M15	2.530	**CONNECTOR**, INLINE-TO I/P HARN (FLAT) (PART OF 12) (4-WAY F) (W/LEADS) (2.535) (AC-DELCO #PT109)	96-98	F	AR	12085487
	1-M15	2.530	**CONNECTOR**, INLINE-TO I/P HARN (PART OF 12) (GRAY) (2-WAY F W/LEADS) (INDEX TAB CTR CAVITY A&B) (2.535) (AC-DELCO #PT217)	96-97	F (C60, K34, T39) (EXPORT)	6	12101825
	1-M15	2.530	**CONNECTOR**, INLINE-TO I/P HARN (PART OF 12) (2-WAY F W/LEADS, W/INDEX TAB OTR EDGE OF CAVITY B) (2.535) (AC-DELCO #PT146)	99-02	F (T79) (EXPORT)	1	12085535
14.		N.S.	**CONNECTOR**, INLINE-TO I/P HARN (PART OF I/P HARN)		.....		
15.	1-N20	3.887	**CONNECTOR**, SW-CRCONT REL (PART OF 12) (BLACK) (2-WAY F) (W/LEADS) (2.530) (AC-DELCO #PT733)	96-02	F	AR	12123463
16.	1-N26	4.630	**PAD**, CLU PED (PART OF 6)	96-02	F	1	10254528
17.	1-E25	0.852	**RETAINER**, CLU PED LVR PIN (4.662)	96-02	F (M49)	1	3817880
18.	1-N21 1-N22 1-N23	4.054	**CONNECTOR**, SW-CLU PED POSN (BLUE) (2-WAY F) (W/LEADS) (AC-DELCO #PT357)	96-02	F	1	12102690
19.	1-N21 1-N22	4.054	**SWITCH**, CLU PED POSN (AC-DELCO #D2214A)	96-02	F (M49)	1	14094368
20.		8.900	**BOLT-HEX**, M8X1.25X30, 22 THD, 24MM OD, 9.8, 7114M (BRK PED BRKT)	96-02	.....	1	11516594
21.		N.S.	**BOLT**, BRK PED PIV (PART OF 6)		....		
22.	1-L21	0.829	**BUMPER**, CLU PED (PART OF 6)	96-02	F (M49)	1	10254536
23.		8.917	**NUT**, M8X1.25X7.1, ZC 10 (CLU M/CYL)	96-02	.....	2	11515748
		8.929	**WASHER**, M8X24X2.3 (CLU M/CYL)	96-02	.....	2	11500373
24.		8.921	**NUT**, METRIC PUSH-ON BOLT RETAINING SPRING (CLU M/CYL)	96-02	.....	1	10009923
25.		8.900	**BOLT**, HFH M8X1.25X18 (BRK PED BRKT)	96-02	.....	1	11513703

RPO DEFINITIONS

AQ9 – SEAT,FRONT BUCKET,DRIVER,PASSENGER,RECLINING
C60 – AIR CONDITIONER,FRONT,MANUAL CONTROLS
K34 – CRUISE CONTROL,AUTOMATIC,ELECTRONIC
LS1 – ENGINE GAS, 8 CYL, 5.7L, SFI, ALUMINUM ENGINE
L36 – ENGINE GAS, 6 CYL, 3.8K, MFI, V6, HO (ERV6 SERIES)
M30 – TRANSMISSION,AUTOMATIC 4 SPEED,4L60E,ELECTRONIC
M49 – TRANSMISSION MAN 5 SPD, BORG WARNER, 77MM, 3.75 1ST, .76 5TH, O/D
T39 – LAMP,TURN SIGNAL,AUXILIARY(EXPORT)
T79 – LAMPS,REAR FOG(EXPORT)

cardiagn.com

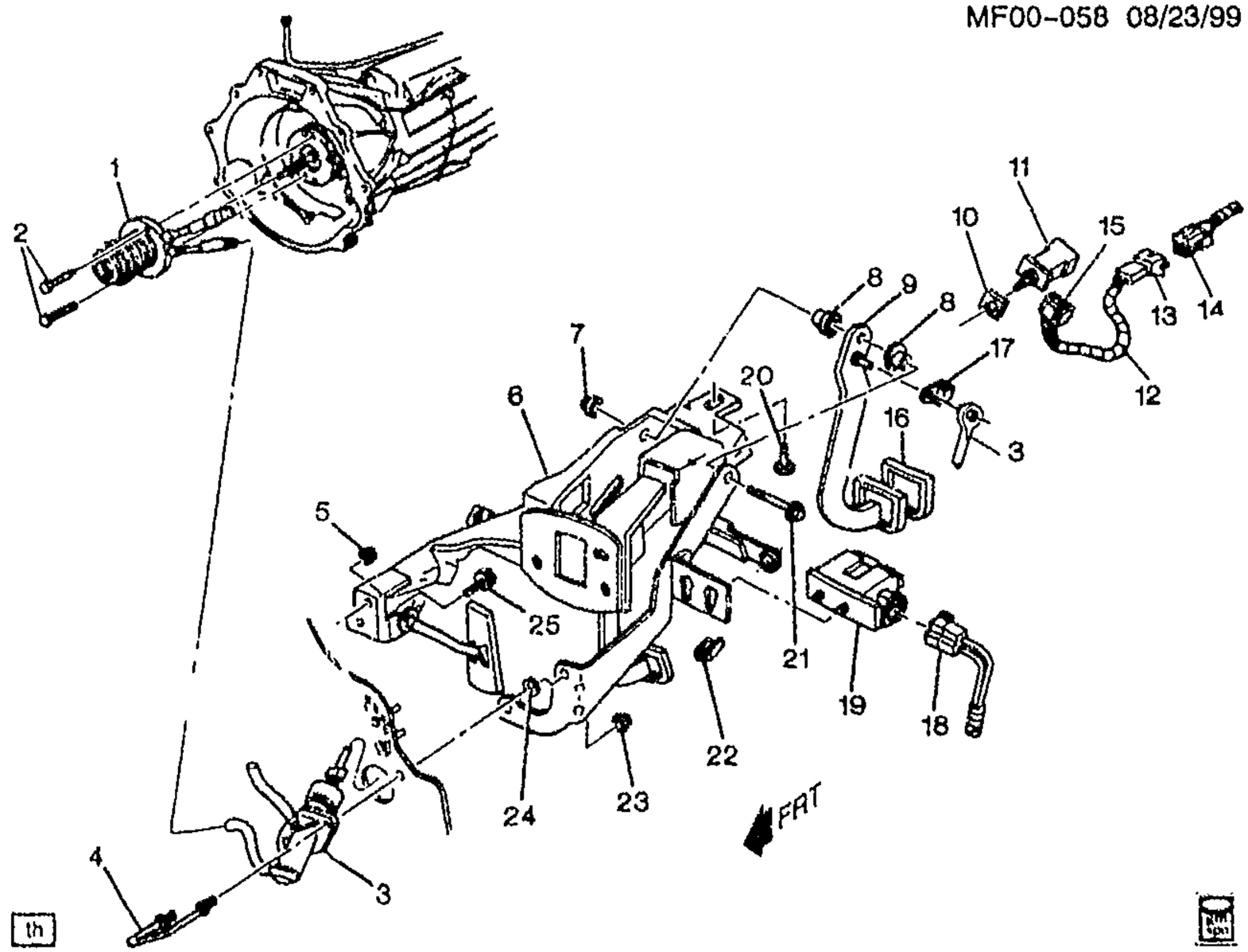

MF00-0581

1998-2002 F CLUTCH LINKAGE (LS1,MM6)

1.	1-E24	0.780	CYLINDER, CLU ACTR	98-99	F	1	15046288
	1-E24	0.780	CYLINDER, CLU ACTR	01-02	F	1	12565145
2.		8.900	BOLT, HEX M6X1X16 10.9 PL (CLU ACTR CYL)	98-02		2	11514753
3.	1-E24	0.775	CYLINDER, CLU MAS (INCL RESERVOIR)	98-00	F	1	12561178
	1-E24	0.775	CYLINDER, CLU MAS (INCL RESERVOIR)	01-02	F	1	12565144
4.	1-E24	0.777	BOLT, CLU M/CYL (U/BOLT W/SHLDR) (AC-DELCO #14076942)	98-02	F (MM6)	1	14076942
5.		8.917	NUT, M8X1.25X7.1, ZC 10 (BRK PED)	98-02		5	11515748
		8.929	WASHER, M8X24X2.3 (BRK PED)	98-02		5	11500323
6.	1-N26	4.625	PEDAL, BRK & ACCEL & CLU (W/BRKT) (INCLS 7-9, 16, 21, 22) (INCLUDES PAD, ARM, PEDAL, SPRING, PIN, NUT, BUSHING, RETAINER)	98	F (MM6)	1	10400451
	1-E25	0.830	PEDAL, BRK & ACCEL & CLU (W/BRKT) (INCLS 7-9, 16, 21, 22) (INCLUDES PAD, ARM, PEDAL, SPRING, PIN, NUT, BUSHING, RETAINER) (4.625)	98	F (MM6)	1	10400451

cardiagn.com

	1-N26	4.625	**PEDAL**, BRK & ACCEL & CLU (W/BRKT) (INCLS 7-9, 16, 21, 22) (INCLUDES PAD, ARM, PEDAL, SPRING, PIN, NUT, BUSHING, RETAINER)	99-02	F (LS1, MM6)	1	10400451
	1-E25	0.830	**PEDAL**, BRK & ACCEL & CLU (W/BRKT) (INCLS 7-9, 16, 21, 22) (INCLUDES PAD, ARM, PEDAL, SPRING, PIN, NUT, BUSHING, RETAINER) (4.625) ...	99-02	F (LS1, MM6)	1	10400451
7.	1-N26	4.634	**NUT**, BRK PED PIV (PART OF 6) (M10X1.5) (HEX PRVL TORQ) (8.917)	98-02	F	1	11516072
8.	1-E25	0.831	**BUSHING**, CLU PED PIV (PART OF 6) (4.626)	98-02	F (MM6)	2	14046812
9.	1-E25	0.832	**ARM**, CLU PED (PART OF 6)	98-02	F (MM6)	1	10401021
10.	1-N20	3.885	**RETAINER**, CRCONT VAC REL VLV (PART OF 11)	98	F	1	10194431
	1-N21 1-N22	4.054	**RETAINER**, M/TRNS SHFT ANTICIPATE SW (NOT PART OF SWITCH) (3.885)	99-02	F (MM6)	1	10194431
11.	1-N20	3.883	**SWITCH**, CRCONT (INCLS 10) (W/O RET) (3.887)	98	F (K34, MM6)	1	22584374
	1-N21 1-N22	4.054	**SWITCH**, M/TRNS SHFT ANTICIPATE (W/O RETAINER) ...	99-02	F (MM6)	1	10180569
12.	1-N20	3.887	**HARNESS**, CRCONT WRG (INCLS 13, 15) (TAPE BACK EXTRA CONN ON M30 APPLICATION)	98-02	F	1	12145111
13.		N.S.	**CONNECTOR**, INLINE-TO I/P HARN (PART OF 12)		.....		
14.		N.S.	**CONNECTOR**, INLINE-TO I/P HARN (PART OF I/P HARN)		.....		
15.	1-N20	3.887	**CONNECTOR**, SW-CRCONT REL (PART OF 12) (BLACK) (2-WAY F) (W/LEADS) (2.530) (AC-DELCO #PT733)	98-02	F	AR	12126463
16.	1-N26	4.630	**PAD**, CLU PED (PART OF 6)	98-02	F	1	10254528
17.	1-E25	0.852	**RETAINER**, CLU PED LVR PIN (4.662)	98-02	F (MM6)	1	3817980
18.	1-N21 1-N22 1-N23	4.054	**CONNECTOR**, SW-CLU PED POSN (BLUE) (2-WAY F) (W/LEADS) (AC-DELCO #PT357)	98-02	F	1	12102690
19.	1-N21 1-N22	4.054	**SWITCH**, CLU PED POSN (AC-DELCO #D2214A)	98-02	F (MM6)	1	14094368
20.		8.900	**BOLT-HEX**, M8X1.25X30, 22 THD, 24MM OD, 9.8, 7114M (BRK PED BRKT)	98-02	.....	1	11516594
21.		N.S.	**BOLT**, BRK PED PIV (PART OF 6)		.....		
22.		N.S.	**BUMPER**, CLU PED (PART OF 6)		.....		
23.		8.917	**NUT**, M8X1.25X7.1, ZC 10 (CLU M/CYL)	98-02	.....	2	11515748
		8.929	**WASHER**, M8X24X2.3 (CLU M/CYL)	98-02	.....	2	11500323

cardiagn.com

					MF00-0581
24.	8.921	NUT, METRIC PUSH-ON BOLT RETAINING SPRING (CLU M/CYL)	98-02	1	10009923
25.	8.900	BOLT, HFH M8X1.25X18 (BRK PED BRKT)	98-02	1	11513703

RPO DEFINITIONS

K34 – CRUISE CONTROL,AUTOMATIC,ELECTRONIC
LS1 – ENGINE GAS, 8 CYL, 5.7L, SFI, ALUMINUM ENGINE
MM6 – TRANSMISSION MAN 6 SPD, BORG WARNER, 85MM, 1ST 2.66, 6TH 0.50, O/D

cardiagn.com

CHEVROLET
CHASSIS GROUP 0.000

ILLUSTRATION INDEX

	TITLE	GRID
1993	F ENGINE ASM–5.7L V8 PART 5 MANIFOLDS & FUEL RELATED PARTS (LT1/5.7P)	2–D4
1993–1995	F ENGINE ASM–5.7L V8 PART 3 FRONT COVER & COOLING (LT1/5.7P)	2–D9
1993–1995	F ENGINE ASM–5.7L V8 PART 4 OIL PUMP, PAN & RELATED PARTS (LT1/5.7P)	2–D11
1993–1997	F ENGINE ASM–5.7L V8 PART 1 CYLINDER BLOCK & RELATED PARTS (LT1/5.7P)	2–D15
1993–1997	F ENGINE ASM–5.7L V8 PART 2 CYLINDER HEAD & RELATED PARTS (LT1/5.7P)	2–D21
1994	F ENGINE ASM–5.7L V8 PART 5 MANIFOLDS & FUEL RELATED PARTS (LT1/5.7P)	2–E2
1995–1997	F ENGINE ASM–5.7L V8 PART 5 MANIFOLDS & FUEL RELATED PARTS (LT1/5.7P)	2–E6
1996–1997	F ENGINE ASM–5.7L V8 PART 3 FRONT COVER & COOLING (LT1/5.7P)	2–E11
1996–1997	F ENGINE ASM–5.7L V8 PART 4 OIL PUMP, PAN & RELATED PARTS (LT1/5.7P)	2–E14
1998	F ENGINE ASM–5.7L V8 PART 2 CYLINDER HEAD AND RELATED PARTS (LS1/5.7G)	2–E17
1998	F ENGINE ASM–5.7L V8 PART 3 FRONT COVER & COOLING (LS1/5.7G)	2–E21
1998	F ENGINE ASM–5.7L V8 PART 5 MANIFOLDS AND FUEL RELATED PARTS (LS1/5.7G)	2–E23
1998–2002	F ENGINE ASM–5.7L V8 PART 1 CYLINDER BLOCK AND RELATED PARTS (LS1/5.7G)	2–F2
1998–2002	F ENGINE ASM–5.7L V8 PART 4 OIL PUMP, PAN & RELATED PARTS (LS1/5.7G)	2–F8
1999	F ENGINE ASM–5.7L V8 PART 5 MANIFOLDS AND FUEL RELATED PARTS (LS1/5.7G)	2–F12
1999–2002	F ENGINE ASM–5.7L V8 PART 2 CYLINDER HEAD AND RELATED PARTS (LS1/5.7G)	2–F18
1999–2002	F ENGINE ASM–5.7L V8 PART 3 FRONT COVER & COOLING (LS1/5.7G)	2–F23
2000	F ENGINE ASM–5.7L V8 PART 5 MANIFOLDS AND FUEL RELATED PARTS (LS1/5.7G)	2–G2
2001–2002	F ENGINE ASM–5.7L V8 PART 5 MANIFOLDS AND FUEL RELATED PARTS (LS1/5.7G)	2–G7
1993–1997	F ENGINE & TRANSMISSION MOUNTING–V8 (LT1/5.7P)	2–G12
1998–2002	F ENGINE & TRANSMISSION MOUNTING–V8 (LS1/5.7G)	2–G14
1993	F COVER/TRANSMISSION CONVERTER (MD8)	2–G16
1994–1995	F COVER/TRANSMISSION CONVERTER (L32,M30)	2–G17
1994–1997	F COVER/TRANSMISSION CONVERTER (LT1,M30)	2–G17
1995–1997	F COVER/TRANSMISSION CONVERTER (L35,M30)	2–G18
1998–2002	F COVER/TRANSMISSION CONVERTER (L36,M30)	2–G19
1998–2002	F COVER/TRANSMISSION CONVERTER (LS1,M30)	2–G20
1993	F CLUTCH (M28,M29)	2–G21
1993–1995	F CLUTCH (M49)	2–G23
1994–1997	F CLUTCH (MM6)	2–G25
1996–2002	F CLUTCH (L36/3.8K)(M49)	2–G27
1998–2002	F CLUTCH (LS1,MM6)	2–H2
1993	F CLUTCH LINKAGE (M28,M29)	2–H4
1993–1995	F CLUTCH LINKAGE (M49)	2–H6
1994–1997	F CLUTCH LINKAGE (MM6)	2–H9
1996–2002	F CLUTCH LINKAGE (L36,M49)	2–H12
1998–2002	F CLUTCH LINKAGE (LS1,MM6)	2–H16

cardiagn.com

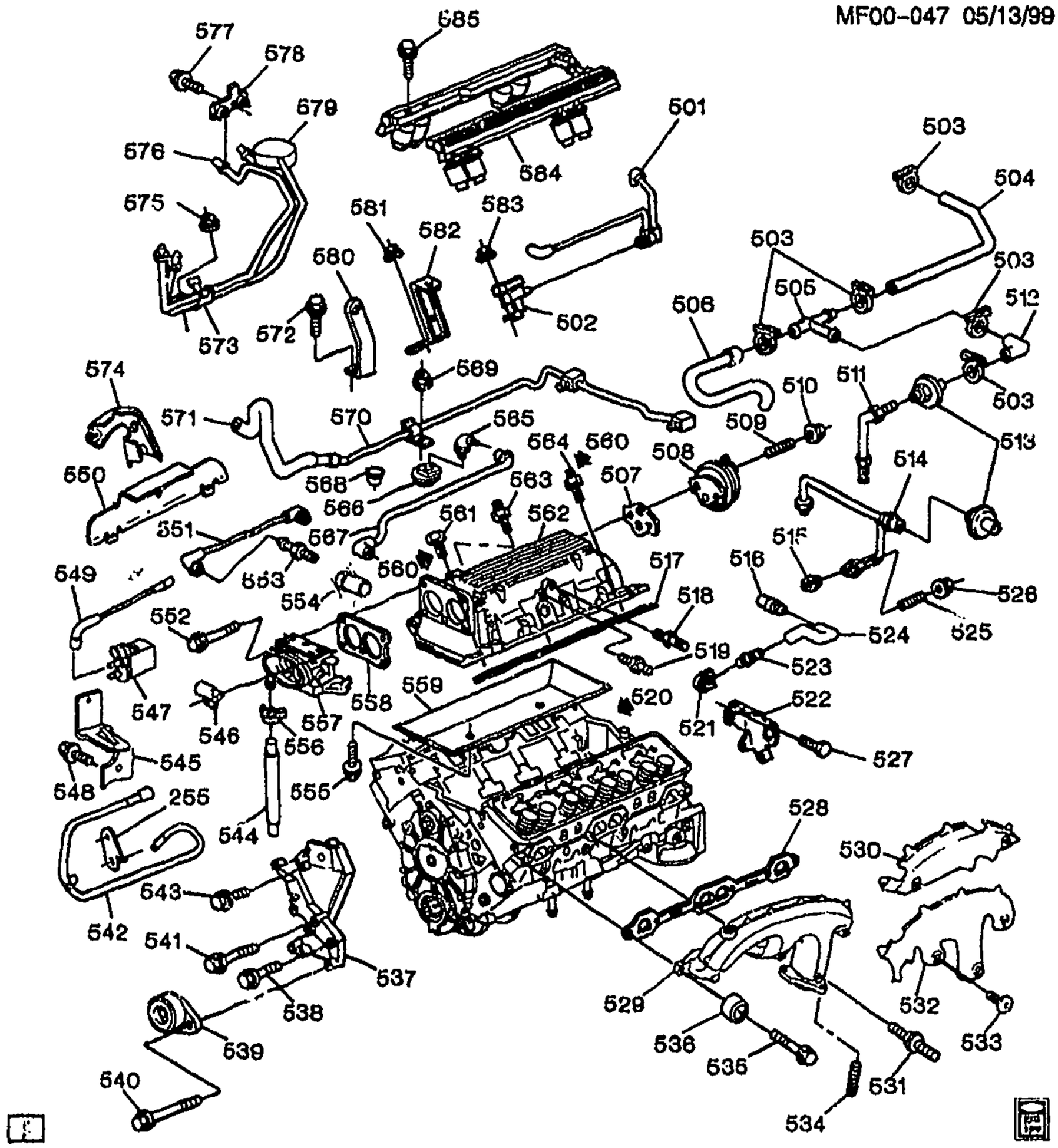

MF00-047

1993 F ENGINE ASM-5.7L V8 PART 5 MANIFOLDS & FUEL RELATED PARTS (LT1/5.7P)

255.	2-M17	3.145	RETAINER, EVAP EMIS CNSTR PURGE TUBE	93 F (LT1)	1	10186192
501.	2-N5	3.675	HARNESS, EGR VLV VAC	93 F (LT1)	1	10105323
502.	2-M26	3.670	SOLENOID, EGR VAC REG VLV (SEE "EGR VALVE & RELATED PARTS" ILLUSTRATION IN GRP. 3.000 FOR DETAILED VIEW.) (AC-DELCO #214-396)	93 F (LT1)	1	1997223
503.		8.948	CLAMP, SIZE 6, .30MIN. - .87MAX - HEX/SLOTTED (SECD AIR INJN CHK VLV HOSE)	93	5	15620989

cardiagn.com

504.	2-N5	3.675	**HOSE**, SECD AIR INJN BYPASS VLV (475MM)	93	F (LT1)	1	10235327
505.	2-N8	3.680	**CONNECTOR**, SECD AIR INJN CHK VLV PIPE (15.5X15.5X22)	93	F (LT1)	1	10105352
506.	2-N5	3.675	**HOSE**, SECD AIR INJN CHK VLV	93	F (LT1)	1	12550300
507.	2-N8	3.680	**GASKET**, EGR VLV (AC-DELCO #219-21)	93	F (LT1)	1	12337972
508.	2-M26	3.670	**VALVE**, EGR (PROD #17092160) (FOR EXPORT REPL EGR VLV W/ EGR VLV CVR & VAC CAP) (AC-DELCO #214-5083)	93	F (LT1, MD8)	1	17113381
	2-M26	3.670	**VALVE**, EGR (PROD 17087241) (AC-DELCO #214-5075)	93	F (LT1, M28, M29)	1	17113373
509.	2-N5	3.671	**STUD**, EGR VLV (5/16 X 18 X 1 43/64) (1.428)	93	F (LT1)	2	14080362
510.		8.917	**NUT**, HFH 5/16-18X.20 286M PC .67-OD (EGR VLV)	93		2	1359887
511.	2-N5	3.675	**PIPE**, SECD AIR INJN (AC-DELCO #10209979)	93	F (LT1)	LH	10209979
512.	2-N5	3.675	**HOSE**, SECD AIR INJN BYPASS VLV (56MM)	93	F (LT1)	1	10108496
513.	2-M26	3.670	**VALVE**, SECD AIR INJN CHK (AC-DELCO #214-419)	93	F (LT1)	2	22048212
514.	2-N5	3.675	**PIPE**, SECD AIR INJN (AC-DELCO #10220124)	93	F (LT1)	RH	10220124
515.	2-N5	3.675	**GASKET**, SECD AIR INJN CHK VLV PIPE	93	F (LT1)	2	10055726
516.	2-B28	1.745	**CONNECTOR**, PCV VLV HOSE (1/4-18 NPTF W/3/8 NIPPLE)	93	F (LT1)	1	336018
517.		N.S.	**GASKET**, INT MANIF (*KIT1)				
518.	2-N8	3.680	**CONNECTOR**, EMIS CONT VAC HARN	93	F (LT1)	1	12550629
519.	2-N20	4.931	**FITTING**, P/B BOOS VAC TUBE	93	F (LT1)	1	10213160
520.		8.800	**SEALANT**, SILICONE RTV SILICONE 6W) (*5 (AC-DELCO #1052915)	93		AR	1052915
521.	2-B28	1.745	**GROMMET**, PCV VLV (1.762)	93	F (LT1)	LH	10207699
	2-B28	1.745	**GROMMET**, PCV VLV (TOP RR VALVE CVR) (23/32 ID-1.22 OD)	93	F (LT1)	RH	10088126
522.	2-M24	3.454	**BRACKET**, ACCEL CONT CBL	93	F (LT1)	1	10226089
523.	2-B28	1.745	**VALVE**, PCV (CV895C, 1 VACUUM PORT) (AC-DELCO #CV895C)	93	F (LT1)	1	25095452
524.	2-C3	1.762	**HOSE**, PCV VLV	93	F (LT1)	1	10128361
525.	2-N5	3.675	**STUD**, SECD AIR INJN BYPASS VLV PIPE (5/16 X 18 X 1 43/64) (1.428)	93	F (LT1)	2	14080362
526.		8.917	**NUT**, HFH 5/16-18X.20 286M PC .67-OD (SECD AIR INJN BYPASS VLV PIPE)	93		2	1359887
527.		8.900	**BOLT-METRIC HEAVY HEX** FLANGE HEAD, M6X1X12 (ACCEL CONT CBL BRKT)	93		3	11516061
528.	2-M19	3.272	**GASKET**, EXH MANIF (3.270)	93	F (LT1)	2	12552469
529.	2-M24	3.601	**MANIFOLD**, EXH (W/SHLDS) (INCL 530, 532, 533)	93	F (LT1)	LH	10207656
	2-M24	3.601	**MANIFOLD**, EXH (W/SHLDS) (INCL 530, 532, 533)	93	F (LT1)	RH	10207657

cardiagn.com

530.		N.S.	SHIELD, EXH MANIF INR HT (W/2 HOLES) (PART OF 529)		.....			
531.	2-M19	3.275	STUD, EXH MANIF (POSN 1, 3) (INCLS SEALER ON FLG HD SIDE)	93	F (LT1)	RH	10242055
	2-M19	3.275	STUD, EXH MANIF (POSN 3) (INCLS SEALER ON FLG HD SIDE)	93	F (LT1)	LH	10242055
532.		N.S.	SHIELD, EXH MANIF INR HT (W/3 HOLES) (PART OF 529)		.....		
533.	2-M23	3.417	PIN, ENG AIR HT STOVE DRV (ALSO PART OF 529) (3.601)	93	F (LT1)	5	10229247
534.	2-M26	3.613	STUD, EXH PIPE	93	F (LT1)	6	10220453
535.	2-M19	3.275	BOLT, EXH MANIF (3/8-16X1 3/16)	93	F (LT1)	9	3909821
536.	2-M26	3.604	SPACER, EXH MANIF BOLT	93	F (LT1)	8	10231254
537.	2-L13	2.277	BRACKET, GEN & A/C CMPR & P/S PUMP	93	F (LT1)	1	10239875
	2-N27	9.171	BRACKET, GEN & A/C CMPR & P/S PUMP (2.277)	93	F (LT1)	1	10239875
538.	2-L13	2.277	BOLT, GEN BRKT (HFH 3/8-16X2.50, 1.12 THD, 280M, .75 OD) (3.655)	93	F (LT1)	2	14084400
539.	2-B10	1.060	TENSIONER, DRV BELT	93	F (LT1)	1	12552509
540.		8.900	BOLT, HWH, M8X1.25X40, SPL FULLTHD, AC PT, 10.9 PZOR (DRV BELT TENSR)	93	.....	2	11515758
541.	2-L13	2.277	BOLT, GEN BRKT	93	F (LT1)	1	10206119
542.	2-M17	3.145	TUBE, EVAP EMIS CNSTR PURGE	93	F (LT1)	1	10105311
543.		8.900	BOLT, HFH 3/8-16X1.12 280M ZP FULL THD .75-OD (GEN BRKT)	93	.....	2	9440071
544.	2-M22	3.337	HOSE, THROT BODY HTR OTLT .	93	F (LT1)	1	10188002
545.	2-M16	3.130	BRACKET, EVAP EMIS CNSTR PURGE SOL VLV	93	F (LT1)	1	10229207
546.	2-M24	3.469	BRACKET, ACCEL CONT CBL SPH SHLD	93	F (LT1)	1	10242904
547.	2-M16	3.130	VALVE, EVAP EMIS CNSTR PURGE SOL (2 PORT VAC, 2 BLADE TERM) (AC-DELCO #214-565)	93	F (LT1)	1	1997201
548.		8.900	BOLT, HFH, M5X.8X10, 8.8 THD, 11.4 OD, 9.8, PO (EVAP EMIS CNSTR PURGE SOL VLV BRKT) .	93	.....	1	11514607
549.	2-M17	3.145	PIPE, EVAP EMIS CNSTR PURGE SOL VLV	93	F (LT1)	1	10105324
550.		DISCON	SHIELD, EXH MANIF INR HT (W/3 HOLES)	93	F (LT1)	1	10168547
551.	2-M21	3.330	TUBE, FUEL PRESS REG VAC ..	93	F (LT1)	1	10105322
552.		8.900	BOLT, HFH M8X1.25X65 9.8 POR (THROT BODY)	93	.....	4	11508083
553.	2-M21	3.278	FITTING, INT MANIF VAC (1 PORT ! IOSE CONN 4.5 OD, SAE 1113, PZOR)	93	F (LT1)	1	14082470
554.	2-M22	3.337	HOSE, THROT BODY HTR OTLT .	93	F (LT1)	1	10188002

cardiagn.com

555		8.900	BOLT-METRIC HEAVY HEX FLANGE HEAD, M6X1X12 (INT MANIF OIL SPH SHLD)	93	.....	4	11516061
556.		8.948	CLAMP, WORM GEAR, 1/2-13/16 (THROT BODY HTR OLTL HOSE)	93	.....	1	22527587
557.	2-M21	3.335	BODY, THROT (SEE "THROTTLE BODY" ILLUSTRATION IN GRP. 3.000 FOR DETAILED VIEW.) (AC-DELCO #17093107)	93	F (LT1)	1	17093107
558.	2-M22	3.336	GASKET, THROT BODY (*KIT2) (AC-DELCO #40-718)	93	F (LT1)	1	10105379
559.	2-M19	3.265	SHIELD, INT MANIF OIL SPH	93	F (LT1)	1	10128305
560.		8.800	SEALANT-LOCTITE PIPE-W/TEFLON 50CC TUBE ...	93	.....	AR	12346004
561.		8.900	BOLT, HFH 3/8-16X1.38 280M PZOR (INT MANIF)	93	.....	6	9439918
562.	2-M19	3.265	MANIFOLD, INT	93	F (LT1)	1	12518284
563.	2-M19	3.275	STUD, INT MANIF ((ALSO ORDER 12346004 SEALER)) (3/8X16X1 3/8)	93	F (LT1)	1	10106420
564.	2-M19	3.275	STUD, INT MANIF (3/8X16X1-1/4) (W/ 6194M ADHES) (8.981)	93	F (LT1)	5	336793
565.	2-C3	1.762	CONNECTOR, PCV HOSE	93	F (LT1)	RH	12550625
566.	2-B28	1.745	GROMMET, PCV VLV (1.762)	93	F (LT1)	LH	10207699
	2-B28	1.745	GROMMET, PCV VLV (TOP RR VALVE CVR) (23/32 ID-1.22 OD) .	93	F (LT1)	RH	10088126
567.	2-C3	1.762	HOSE, PCV	93	F (LT1)	1	10128365
568.	2-N8	3.682	PLUG, MAP SEN HOLE (8.153) ..	93	F (LT1)	1	3738198
569.		8.917	NUT, .375 16 HEX (ENG COOL AIR BL PIPE)	93	.....	1	14057004
570.	2-B13	1.097	PIPE, ENG COOL AIR BL (INCL 571)	93	F (LT1)	1	10108635
571.	2-B13	1.097	HOSE, ENG COOL AIR BL (ALSO PART OF 570)	93	F (LT1)	1	10188004
572.		8.900	BOLT, HFH 3/8-16X1.12 280M ZP FULL THD .75-OD (ENG LIFT FRT BRKT)	93	.....	2	9440071
573.	2-M17	3.162	CLIP, FUEL FEED & RTN PIPE ...	93	F (LT1)	1	10128430
574.		N.S.	SHIELD, EXH MANIF OTR HT (PART OF 529)		.....	RH	
575.		8.917	NUT, .375 16 HEX (FUEL FEED & RETURN PIPE CLIP)	93	.....	AR	14057004
576.	2-M18	3.163	PIPE, F/INJN FUEL RTN	93	F (LT1)	1	10128428
577.	2-M17	3.162	BOLT, F/INJN FUEL FEED & RTN PIPE CLIP	93	F (LT1)	1	10224231
578.	2-M17	3.162	CLIP, F/INJN FUEL FEED & RTN PIPE	93	F (LT1)	1	10224230
579.	2-M18	3.163	PIPE, F/INJN FUEL FEED	93	F (LT1)	1	10128427
580.		N.S.	BRACKET, ENG LIFT FRT		.....		
581.		8.917	NUT, .375 16 HEX (ACCEL CONT CBL CLIP BRKT)	93	.....	1	14057004
582.	2-M17	3.162	BRACKET, ACCEL CONT CBL CLIP	93	F (LT1)	1	10150070
583.		8.917	NUT, .375 16 HEX (EGR C/VLV RLY SOL)	93	.....	1	14057004

cardiagn.com

584.		N.S.	RAIL, M/PORT F/INJN FUEL (SEE "FUEL INJECTOR RAIL" ILLUSTRATION IN GRP. 3.000 FOR DETAILED VIEW) (COMPONENT PARTS SERVICED)		.....		
585.	2-M21	3.330	BOLT, F/INJN FUEL RL (HFH, M8X1.25X35, 28 THD, 14 OD, 9.8;USE T/W 12345382 ADHES) .	93	F (LT1)	4	10108668

SERVICE KITS

1.	2-M19	3.270	GASKET KIT, INT MANIF (INCL 517) (KIT CONTAINS: GASKET FOR INTAKE MANIFOLD.)	93	F (LT1)	1	12524653
2.	2-M22	3.336	GASKET KIT, THROT BODY (INCL 558) (KIT CONTAINS: GASKET FOR THROT BODY) (AC-DELCO #40-742)	93	F (LT1)	1	17112833

RPO DEFINITIONS

LT1 – ENGINE-GAS, 8 CYL, 5.7L(5.7P),MFI,HO
MD8 – TRANSMISSION,AUTOMATIC 4-SPEED(THM700R4/4L60)
M28 – TRANSMISSION MAN, 6 SPD, BORG WARNER, 85MM, 3.36 1ST, 1.35 3RD
M29 – TRANSMISSION MAN, 6 SPD, BORG WARNER, 85MM, 2.97 1ST, 1.44 3RD

cardiagn.com

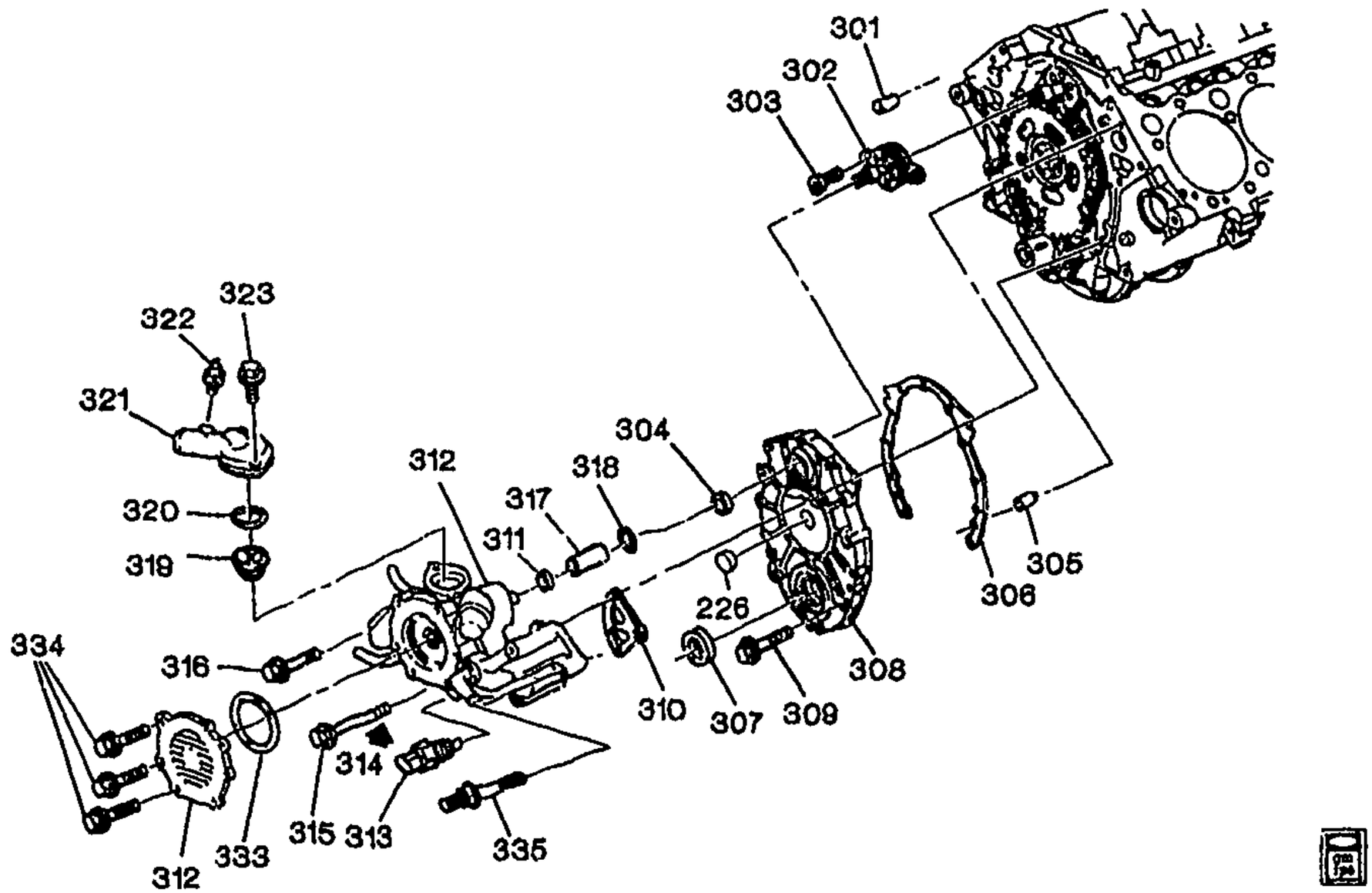

GM00-340F

1993-1995 F ENGINE ASM-5.7L V8 PART 3 FRONT COVER & COOLING (LT1/5.7P)

226.	2-L14	2.372	SEAL, DISTR DRV SHF (PART OF 308) (2.363)	95	F (LT1)	1	12552428
	2-L14	2.372	SEAL, DISTR DRV SHF (IN ENG FRT CVR) (PART OF 308)	93-94	F (LT1)	1	10128317
301.	2-B12	1.079	PIN, W/PMP LOC (ALSO PART OF PARTIAL ENGINE) (DOWELL, 0.31X1.25, STL-HRD, PL, CHAM ENDS)	93-95	F (LT1)	1	10128487
302.	2-B13	1.105	SHAFT, W/PMP DRV	93-95	F (LT1)	1	10219554
303.	2-B13	1.108	BOLT, W/PMP DRV SHF BRG RET (HEX SOC TORQ DR 1/4-20 X 1/2, 15/32 OD) (0.529)	93-95	F (LT1)	2	14093637
304.	2-B13	1.123	SEAL, W/PMP BRG (ALSO PART OF 308)	93-95	F (LT1)	1	10217886
305.	2-B28	1.723	PIN, (1/4 X 5/8) (ENG FRT CVR LOC) (8.939)	93-95	.....	2	12554553
306.	2-A11	0.207	GASKET, ENG FRT CVR	93-95	F (LT1)	1	10128293
307.	2-A11	0.213	SEAL, CR/SHF FRT OIL (ALSO PART OF 308) (61.5MM O.D. W/PART NUMBER STAMPING) ..	93-95	F (LT1)	1	10128316
308.	2-A11	0.206	COVER, ENG FRT (INCL 304, 307) (ALSO INCLUDES DISTRIBUTOR SEAL (SEE PART	93-94	F (LT1)	1	12551636

cardiagn.com

	2-A11	0.206	COVER, ENG FRT (INCL 304, 307) (ALSO INCLUDES DISTRIBUTOR SEAL (SEE PART 2) .)	95	F (LT1)	1	12552426
309.		8.900	BOLT, FLG HEX HD (1/4-20X1 3/8 .52 OD, .75 THD, 280M, PO) (ENG FRT CVR)	93-95		8	9442397
310.	2-B12	1.079	GASKET, W/PMP (ALSO PART OF 312) (ALSO PART OF DISTRIBUTOR ASSEMBLY (SEE PART 2) .)	93-95	F (LT1)	2	10128343
311.	2-B13	1.105	SEAL, W/PMP DRV SHF	93-95	F (LT1)	1	12553792
312.	2-B12	1.069	PUMP KIT, WAT (INCL 310) (AC-DELCO #251-556)	93-95	F (LT1)	1	12527741
313.	2-N8	3.682	SENSOR, ENG COOL TEMP (AT INT MANIF, INTERFACES W/ECM, USED FOR CLUSTERS W/OIL GAGE & LIGHT COMB, GOES W/12101899 CONN) (2-WAY M) (AC-DELCO #213-310)	93-95	F (LT1)	1	12146312
	2-B14	1.150	SENSOR, ENG COOL TEMP (AT INT MANIF, INTERFACES W/ECM, USED FOR CLUSTERS W/OIL GAGE & LIGHT COMB, GOES W/12101899 CONN) (2-WAY M) (3.682) (AC-DELCO #213-310)	93-95	F (LT1)	1	12146312
314.		8.800	SEALANT-LOCTITE PIPE-W/TEFLON 50CC TUBE	93-95		AR	12346004
315.		8.900	BOLT, HFH, 3/8-16X4, 1.12 THD, .75 OD, 280M, PC (W/PMP)	93-95		4	9423592
316.		8.900	BOLT/SCREW-HEX FLG HD, 3/8"-16 X 2" (W/PMP)	93-95		2	9440073
317.	2-B13	1.105	COUPLING, W/PMP DRV SHF	93-95	F (LT1)	1	10128334
318.	2-B13	1.105	SEAL, W/PMP DRV SHF	93-95	F (LT1)	1	12553792
319.	2-B19	1.246	THERMOSTAT, ENG COOL (180 DEG) (INCL 320) (AC-DELCO #131-100)	93-95	F (LT1)	1	12555290
320.	2-B20	1.252	SEAL, ENG COOL THERM (O RING) (ALSO PART OF 319) (AC-DELCO #12551507)	93-95	F (LT1)	1	12551507
321.	2-B12	1.073	INLET, W/PMP (W/THERM HSG & BLEDR SCREW) (INCL 322)	93-95	F (LT1)	1	10108667
322.	2-B8	1.035	VALVE, ENG COOL AIR BL (ALSO PART OF 321)	93-95	F (LT1)	1	10070107
323.		8.900	BOLT, HFH, M6X1X25, 10.9, FULL, PS (W/PMP INL)	93-95		2	22539278
333.	2-B13	1.123	SEAL, W/PMP CVR (O RING) (1.114)	93-95	F (LT1)	1	10128329
334.		8.900	BOLT, M6X1X16, 13.5 THD, 14.2 OD, 9.8, SN-ZN (W/PMP CVR)	93-95		AR	11517517
335.	2-B12	1.079	STUD, W/PMP	93-95	F (LT1)	1	10223560

cardiagn.com

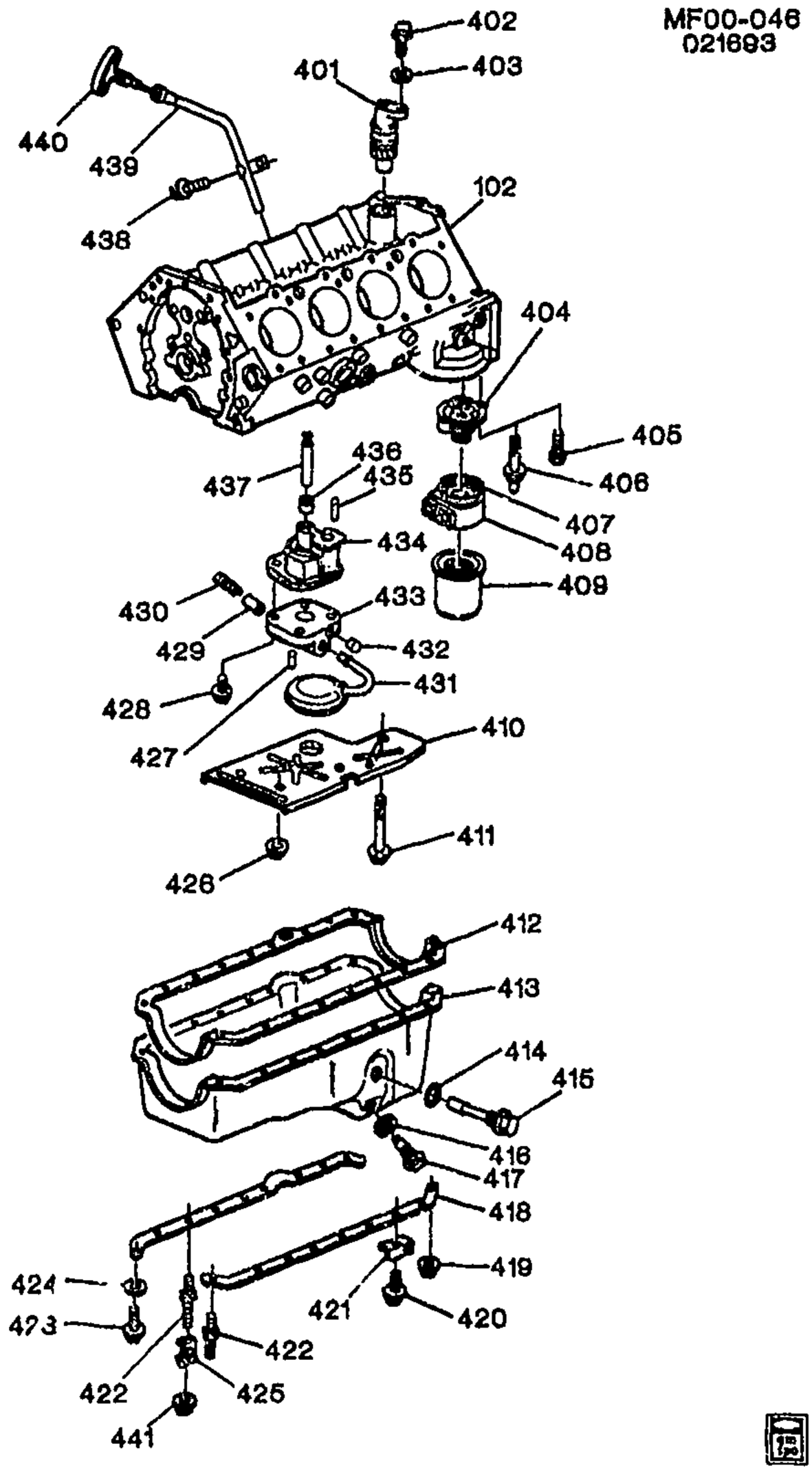

MF00-046

1993-1995 F ENGINE ASM-5.7L V8 PART 4 OIL PUMP, PAN & RELATED PARTS (LT1/5.7P)

102.		N.S.	BLOCK, ENG (SEE "ENGINE ASM PART 1 THRU 5" ILLUSTRATIONS FOR DETAILED VIEWS.)		.....		
401.	2-B26	1.639	DRIVE, O/PMP (AC-DELCO #1103868)	93-95	F (LT1)	1	1103868

cardiagn.com

402.		8.900	BOLT, HEX .312-18X.750 300M PC (O/PMP DRV SHF)	93-95		1	9424877
403.		8.929	WASHER, FLAT 5/16X5/8X1/16 ZP HARD (O/PMP DRV SHF)	93-95		1	2436162
404.	2-C5	1.840	ADAPTER, OIL FLTR (ALSO PART OF PARTIAL ENGINE ASM.) (INCLS ADAP, PLUG, SPR&VLV)	93-95	F (LT1) (EXC KC4)	1	3952301
	2-C5	1.840	ADAPTER, OIL FLTR (ALSO PART OF PARTIAL ENGINE ASM.)	93-95	F (LT1, KC4)	1	10055722
405.	2-C5	1.840	BOLT, OIL FLTR ADAP (5/16-18X1.12 280MM PC) (.312-18X1.25 PL) (8.900)	93-95	F (LT1) (EXC KC4)	2	3951644
406.	2-C5	1.840	STUD, OIL FLTR ADAP (5/16-18X1.88)	93-95	F (LT1, KC4)	2	14101106
407.	2-B26	1.550	SEAL, ENG OIL CLR (ALSO PART OF 408) (FOR 1995- SEAL IS BONDED TO ITEM 408)	93-94	F	1	14087586
408.	2-B26	1.540	COOLER, ENG OIL (INCL 407)	93-94	F (LT1, KC4)	1	10168415
	2-B26	1.540	COOLER, ENG OIL (INCL 407) (INCLS SEAL ON TOP AGAINST OIL ADAPTER) (AC-DELCO #10244123)	95	F (LT1, KC4)	1	10244123
409.	2-C4	1.836	FILTER, OIL (AC-DELCO #PF25)	93-95	F (LT1)	1	6438261
	2-C4	1.836	FILTER, OIL (AC-DELCO #UPF25)	93-95	F (LT1)	1	25322833
	2-C4	1.836	FILTER, OIL (AC-DELCO #SPF25)	93-95	F (LT1)	1	25325405
410.	2-B23	1.430	DEFLECTOR, CR/SHF OIL	93-95	F (LT1)	1	12554816
411.	2-B27	1.632	BOLT, O/PMP (7/16-14X2 3/8)	93-95	F (LT1)	1	10046007
412.	2-B23	1.429	GASKET, OIL PAN	93-95	F (LT1)	1	14088505
413.	2-B22	1.426	PAN, OIL	93-95	F (LT1)	1	12557557
414.	2-B23	1.516	SEAL, ENG OIL LVL SEN (ALSO PART OF 415)	93-95	F (LT1)	1	10151633
415.	2-B23	1.516	SENSOR, ENG OIL LVL (INCL 414)	93-95	F (LT1)	1	24507190
416.	2-B23	1.456	GASKET, OIL PAN DRN PLUG	93-95	F (LT1)	1	14090908
417.	2-B23	1.453	PLUG, OIL PAN DRN (1/2-20, 81LG)	93-95	F (LT1)	1	3921988
418.	2-B22	1.426	REINFORCEMENT, OIL PAN	93-95	F (LT1)	LH	12553058
	2-B22	1.426	REINFORCEMENT, OIL PAN	93-95	F (LT1)	RH	12553059
419.		8.915	NUT, HEX (5/16-18X.25 286M POR) (OIL PAN)	93-95		2	12338130
420.		8.900	BOLT, HFH 1/4-20X.62 280M POR (OIL PAN)	93-95		14	9440033
421.	2-M14	2.559	BRACKET, ENG WRG HARN	93-94	F (LT1) (EXC KC4)	LH	12553341
422.	2-B22	1.428	STUD, OIL PAN (5/16-18X.68, 5/16-18X.49)	93-95	F (LT1)	1	14084059
	2-B22	1.428	STUD, OIL PAN (1/4X20X.56/1/4X20X.50) (14X20X.56-1/4X20X.50)	94-95	F (LT1)	1	14101092
423.		8.900	BOLT, HEX .312-18X.750 300M PC (OIL PAN)	93-95		1	9424877
424.		8.929	WASHER, FLAT 5/16X5/8X1/16 ZP HARD (OIL PAN)	93-95		1	2436162
425.	2-N19	4.128	CLIP, TRANS FLUID CLR PIPE	94-95	F (LT1, M30)	1	10224905

cardiagn.com

	2-N19	4.128	CLIP, TRANS FLUID CLR PIPE (POS #1)	93	F (MD8)	1	10225624
426.		8.917	NUT, HEX-LK-3/8-16 301M CAD (CR/SHF OIL DFL)	93-95		3	9422297
427.	2-B26	1.609	PIN, OIL PRESS RLF VLV SPR ST (ALSO PART OF 434)	93-95	F (LT1)	1	838839
428.	2-B28	1.723	BOLT, O/PMP CVR (ALSO PART OF 434) (HFH M6X1X20 9.8 PZOR) (8.900) (AC-DELCO #11508600)	93-95	F (LT1)	2	11508600
	2-B28	1.723	BOLT, O/PMP CVR (ALSO PART OF 434) (M6X1X20, 19THD, 14.2OD) (8.900) (AC-DELCO #11517518)	93-95	F (LT1)	2	11517518
429.	2-B26	1.609	VALVE, OIL PRESS RLF (ALSO PART OF 434)	93-95	F (LT1)	1	3702366
430.	2-B26	1.609	SPRING, OIL PRESS RLF VLV (ALSO PART OF 434)	93-95	F (LT1)	1	10044435
431.	2-B27	1.656	SCREEN, O/PMP	93	F (LT1) (1ST DES)	1	10168449
	2-B27	1.656	SCREEN, O/PMP (.620 DIA TUBE) (FOR 2ND DES SEE 12550042)	94	F (LT1) (1ST DES)	1	3855152
	2-B27	1.656	SCREEN, O/PMP (.742 DIA TUBE) (FOR 1ST DES SEE 03855152)	94	F (LT1) (2ND DES)	1	12550042
	2-B27	1.656	SCREEN, O/PMP	95	F (LT1)	1	12550042
	2-B27	1.656	SCREEN, O/PMP (.742 DIA TUBE)	93	F (LT1) (1ST DES)	1	10168449
432.	2-B26	1.609	PLUG, OIL PRESS RLF VLV BORE (ALSO PART OF 434) (NON-THD 7/16 DIA, 13/32 LGTH) (CHAM ENDS, STL)	93-95	F (LT1)	1	3704871
433.	2-B28	1.723	COVER, O/PMP (ALSO PART OF 434) (W/COVER, PIN, PLUGS, SPRING & VALVE)	93	F (LT1)	1	14046552
	2-B28	1.723	COVER, O/PMP (ALSO PART OF 434) (INCLS COVER, PLUGS, SPRING & VALVE) (.742 DIAM TUBE)	94	F (LT1) (2ND DES)	1	10168528
	2-B28	1.723	COVER, O/PMP (ALSO PART OF 434) (W/COVER, PIN, PLUGS, SPRING & VALVE) (.620 DIAM TUBE)	94	F (LT1) (1ST DES)	1	14046552
	2-B28	1.723	COVER, O/PMP (ALSO PART OF 434) (INCLS COVER, PLUGS, SPRING & VALVE)	95	F (LT1)	1	10168528
434.	2-B27	1.652	PUMP, OIL (INCL 427, 428, 429, 430, 432, 433) (INCLS BOLTS, COVERS, GEARS, HSGS, PIN, PLUG, SHFS, SPR & VLV) (.742 TUBE DIA; 2ND DES SEE 12555284)	93	F (LT1) (1ST DES)	1	12555283
	2-B27	1.652	PUMP, OIL (INCL 427, 428, 429, 430, 432, 433) (.620 DIA TUBE; 1ST DES 1993 SEE 12555283)	93	F (LT1) (2ND DES)	1	12555284

cardiaopn.com

	2-B27	1.652	PUMP, OIL (INCL 427, 428, 429, 430, 432, 433) (INCLS BOLTS, COVERS, GEARS, HSGS, PIN, PLUG, SHFS, SPR & VLV) (.742 TUBE DIA; 1ST DES SEE 12555284)	94	F (LT1) (2ND DES)	1	12555283
	2-B27	1.652	PUMP, OIL (INCL 427, 428, 429, 430, 432, 433) (.620 TUBE DIA, 2ND DES SEE 12555283)	94	F (LT1) (1ST DES)	1	12555284
	2-B27	1.652	PUMP, OIL (.742 TUBE DIA) (INCL 427, 428, 429, 430, 432, 433) (INCLS BOLTS, COVERS, GEARS, HSGS, PIN, PLUG, SHFS, SPR & VLV)	95	F (LT1)	1	12555283
435.	2-B28	1.723	PIN, (1/4 X 5/8) (O/PMP LOC (PART OF PARTIAL ENGINE)) (8.939)	93-95	.....	2	12554553
436.	2-B26	1.639	RETAINER, O/PMP DRV SHF	93-95	F (LT1)	1	3764554
437.	2-B26	1.639	SHAFT, O/PMP DRV	93-95	F (LT1)	1	3998287
438.		8.900	BOLT, HFH (1/4-20X.56 280M PZOR) (OIL LVL IND TUBE)	93-95	.....	1	9439930
439.	2-B23	1.516	TUBE, OIL LVL IND (INCLS SEAL)	93-94	F (LT1)	1	12551831
	2-B23	1.516	TUBE, OIL LVL IND	95	F (LT1)	1	12551154
440.	2-B23	1.516	INDICATOR, OIL LVL	93-94	F (LT1)	1	10232187
	2-B23	1.516	INDICATOR, OIL LVL	95	F (LT1)	1	12551144
441.		8.917	NUT, HFX, 1/4-20X.234, 284M, 69K, POR, 240 (TRANS OIL CLR PIPE CLIP)	93-95	.....	1	9439915

RPO DEFINITIONS
KC4 – COOLING SYSTEM,ENGINE OIL
LT1 – ENGINE-GAS, 8 CYL, 5.7L(5.7P),MFI,HO
MD8 – TRANSMISSION,AUTOMATIC 4-SPEED(THM700R4/4L60)
M30 – TRANSMISSION,AUTOMATIC 4 SPEED,4L60E,ELECTRONIC

cardiagn.com

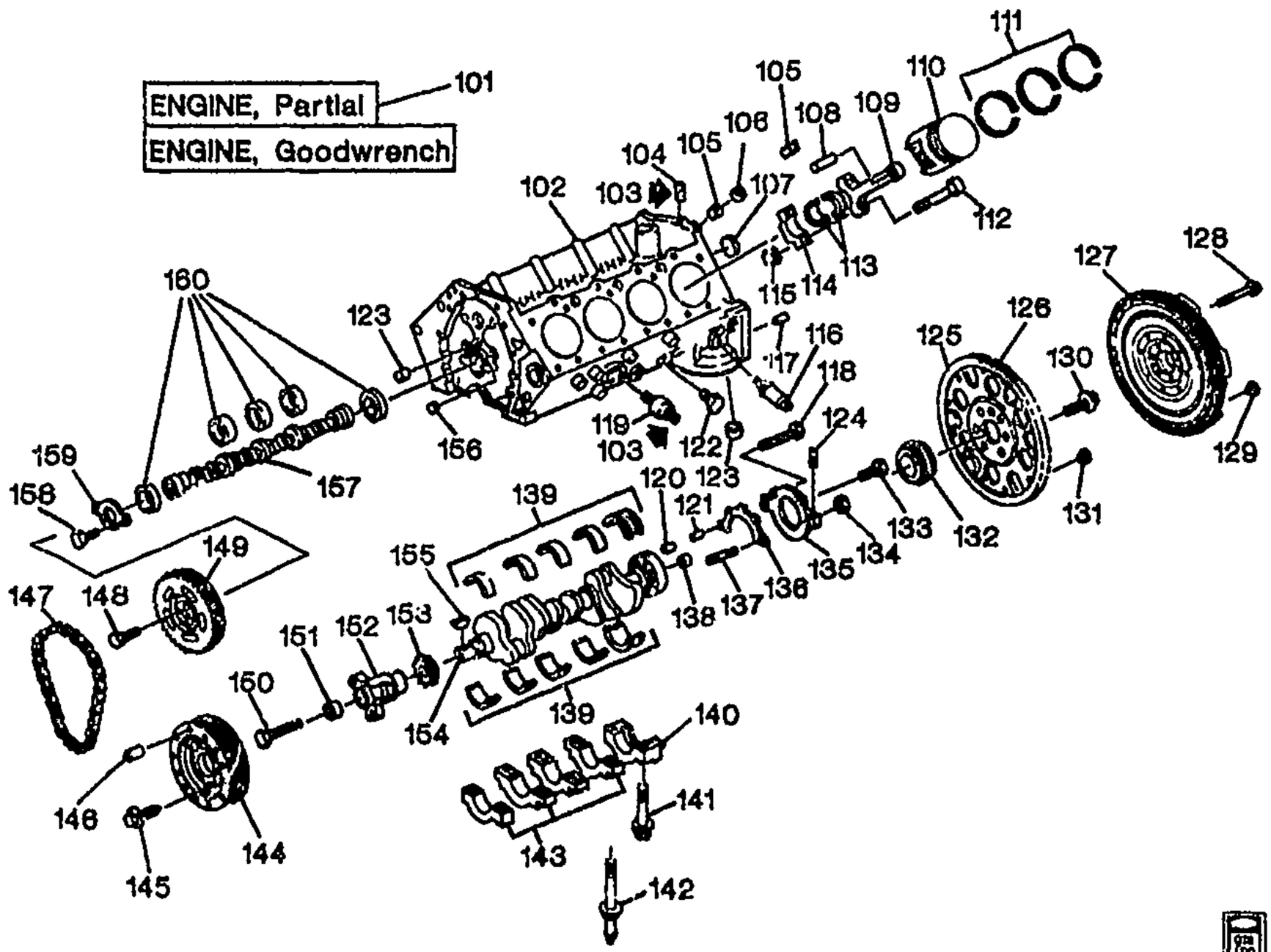

MF00-043

1993-1997 F ENGINE ASM-5.7L V8 PART 1 CYLINDER BLOCK & RELATED PARTS (LT1/5.7P)

101.	2-A7	0.000 A	ENGINE, GASOLINE (GOODWRENCH) (NEW) (REFER TO NOTE#6 IN CATLG TEXT) (*5)	95	F (LT1)	1	88894195
	2-A7	0.000 A	ENGINE, GASOLINE (GOODWRENCH) (NEW) (REFER TO NOTES #6 & #6A IN CATLG TEXT)) (*5)	93-94	F (LT1)	1	88894196
	2-A7	0.000 A	ENGINE, GASOLINE (GOODWRENCH) (NEW) (REFER TO NOTE #5 IN CATLG TEXT)) (*5)	96-97	F (LT1)	1	88894197
102.		N.S.	BLOCK, ENG (INCL 140, 141, 143, 160)				
103.		8.800	SEALANT-LOCTITE PIPE-W/TEFLON 50CC TUBE	93-97		AR	12346004
104.		8.971	PLUG, 1/8 NPTF (ENG BLK OIL GAL) (AC-DELCO #444613)	93-97		1	444613
105.		8.971	PLUG, HEX SOC, .250-18, .69 LNG, PC, DOG PT (ENG BLK OIL GAL)	93-97		4	12338136
106.		8.970	PLUG EXPANSION (1/2" STL)	93-97		1	3701638

cardiagn.com

107.		8.970	PLUG, EXPANSION CUP 2.107 OD (CM/SHF RR BRG HOLE)	93-97	.....	1	10241154
108.		N.S.	PIN, PSTN (PART OF 110)		.....		
109.	2-A15	0.603	ROD, CONN (INCL 112, 114, 115)	93-97	F (LT1)	8	10108688
110.	2-A15	0.629	PISTON, (W/PIN) (.030 O.S.) (INCLS 108)	93-97	F (LT1)	8	10159438
	2-A15	0.629	PISTON, (W/PIN) (STD) (INCLS 108) (S1=101.614-101.596)	93-97	F (LT1)	8	10159436
	2-A15	0.629	PISTON, (W/PIN) (STD HI-LIMIT) (INCLS 108) (S2=101.632-101.614)	93-97	F (LT1)	8	10159437
111.	2-A16	0.643	RING KIT, PSTN (STD)	93-97	F (LT1)	8	12528817
	2-A16	0.643	RING KIT, PSTN (.005" O.S.)	93-97	F (LT1)	8	12528818
	2-A16	0.643	RING KIT, PSTN (.030 O.S.)	93-97	F (LT1)	8	12528819
112.	2-A15	0.623	BOLT, CONN ROD (ALSO PART OF 109)	93-97	F (LT1)	16	461372
113.	2-A15	0.616	BEARING KIT, CONN ROD (.002 U.S.)	93-95	F (LT1)	8	12329426
	2-A15	0.616	BEARING KIT, CONN ROD (.020 U.S.)	93-95	F (LT1)	8	12329427
	2-A15	0.616	BEARING KIT, CONN ROD (STD)	93-97	F (LT1)	8	12523924
	2-A15	0.616	BEARING KIT, CONN ROD (.001 U.S.) (FEDERAL-MOGUL)	93-97	F (LT1)	8	12523925
	2-A15	0.616	BEARING KIT, CONN ROD (.010" U.S.) (.010 U.S.)	93-97	F (LT1)	8	12523926
114.		N.S.	CAP, CONN ROD (PART OF 109) .		.....		
115.	2-A15	0.626	NUT, CONN ROD (NUT, HEX 3/8-24 ZC 301M MODF:CONN ROD) (ALSO PART OF 109) (3/8-24) (HEX)		.....	16	3866766
116.	2-C3	1.800	SENSOR, F/PMP SW & ENG OIL PRESS GA (1/8-27 THD SIZE) (3 BLADE TERM) (AC-DELCO #10201491) (LOC IN FTG 10137636 MOUNTED HIGH ON ENG)	94	F (LT1) (2ND DES)	1	10201491
	2-N15	3.910	SENSOR, F/PMP SW & ENG OIL PRESS GA (1/8-27 THD SIZE) (3 BLADE TERM) (1.800) (AC-DELCO #10201491) (LOC IN FTG 10137636 MOUNTED HIGH ON ENG)	94	F (LT1) (2ND DES)	1	10201491
	2-C3	1.800	SENSOR, F/PMP SW & ENG OIL PRESS GA (1/8-27 THD SIZE) (3 BLADE TERM) (AC-DELCO #10201491) (LOC IN FTG 10137636 MOUNTED HIGH ON ENG)	95-97	F (LT1)	1	10201491
	2-N15	3.910	SENSOR, F/PMP SW & ENG OIL PRESS GA (1/8-27 THD SIZE) (3 BLADE TERM) (1.800) (AC-DELCO #10201491) (LOC IN FTG 10137636 MOUNTED HIGH ON ENG)	95-97	F (LT1)	1	10201491
	2-C3	1.800	SENSOR, F/PMP SW & ENG OIL PRESS GA (3 TERM, 1/4-18 THD) (AC-DELCO #24575127) .	93	F (LT1)	1	24575127

cardiagn.com

	2-N15	3.910	SENSOR, F/PMP SW & ENG OIL PRESS GA (3 TERM, 1/4-18 THD) (1.800) (AC-DELCO #24575127)	93	F (LT1)	1	24575127
	2-C3	1.800	SENSOR, F/PMP SW & ENG OIL PRESS GA (3 TERM, 1/4-18 THD) (AC-DELCO #24575127) (LOCATED ABOVE OIL FLTR, LOW ON ENG)	94	F (LT1) (1ST DES)	1	24575127
	2-N15	3.910	SENSOR, F/PMP SW & ENG OIL PRESS GA (3 TERM, 1/4-18 THD) (1.800) (AC-DELCO #24575127) (LOCATED ABOVE OIL FLTR, LOW ON ENG)	94	F (LT1) (1ST DES)	1	24575127
117.		8.939	PIN, DOWEL STRAIGHT 5/8 DIA 1 3/16 LG (TRANS)	93-97	.....	2	12338119
118.	2-A10	0.137	BOLT, CR/SHF RR OIL SEAL HSG (1/4-20 X 1 3/4)	93-97	F (LT1)	1	14088562
119.	2-L14	2.383	SENSOR, KNOCK (AC-DELCO #213-96)	93-95	F (LT1)	1	10456126
	2-L14	2.383	SENSOR, KNOCK (AC-DELCO #213-325)	96-97	F (LT1)	1	10456287
120.	2-A17	0.669	PIN, FLYWHL LOC (ALSO PART OF 154) (7/16 DIA. X 7/8)	93-97	F (LT1)	1	3701679
121.		8.940	PIN, SPRING TYPE S 7/16X9/16 STL ZP (PIN, SPRING TYPE S 7/16X9/16 STL ZP MODF:CR/SHF RR OIL SEAL HSG LOC)	93-97	.....	1	9441003
122.		8.971	PLUG; USED W/ 12346004 SEALER; 1/4-18 NPTF DRY SEAL (ENG BLK COOL DRN HOLE) (AC-DELCO #3889330) .	93-97	.....	1	3889330
123.	2-B25	1.531	PLUG, ENG BLK OIL GAL (CUP 15/32 X 5/16)	93-97	F (LT1)	2	14091563
124.	2-A10	0.137	STUD, CR/SHF RR OIL SEAL RET (ALSO PART OF 135) (5/16 X 18 X 1 43/64) (1.428)	93-97	F (LT1)	2	14080362
125.	2-A16	0.666	FLYWHEEL, (AUTO TRANS)	93	F (LT1, MD8)	1	14088765
	2-A16	0.666	FLYWHEEL, (AUTO TRANS)	94-97	F (LT1, M30)	1	14088765
126.	2-A18	0.673	GEAR, FLYWHL RING (AUTO TRANS) (153 TEETH)	93-96	F (LT1)	1	3991407
	2-A18	0.673	GEAR, FLYWHL RING (AUTO TRANS) (153 TEETH)	97	F (LT1, MM6, M30)	1	3991407
127.	2-A16	0.666	FLYWHEEL, ENG (MANUAL TRANS) (153 TEETH)	93	F (LT1, M28, M29)	1	10125379
	2-A16	0.666	FLYWHEEL, ENG (MANUAL TRANS) (153 TEETH)	94-97	F (LT1, MM6)	1	10125379
	2-A17	0.669	WEIGHT, FLYWHL (MANUAL TRANS) (2380/.2500 X .50) (BARREL-SHAPED PIN) (GROOVE-F)	93	F (LT1, M28, M29)	1	3890192
	2-A17	0.669	WEIGHT, FLYWHL (MANUAL TRANS) (2380/.2500 X .50) (BARREL-SHAPED PIN) (GROOVE-F)	94-97	F (LT1, MM6)	AR	3890192

cardiagn.com

	2-A17	0.669	WEIGHT, FLYWHL (BARREL-SHAPED PIN (GROOVE-F), .75" LONG) (MANUAL TRANS)	93	F (LT1, M28, M29, GU2, GU5)	AR	3890193
	2-A17	0.669	WEIGHT, FLYWHL (BARREL-SHAPED PIN (GROOVE-F), 1.0" LONG) (MANUAL TRANS)	93	F (LT1, M28, M29, GU2, GU5)	AR	3890194
	2-A17	0.669	WEIGHT, FLYWHL (BARREL-SHAPED PIN (GROOVE-F), .75" LONG) (MANUAL TRANS)	94-97	F (LT1, MM6, M28)	AR	3890193
	2-A17	0.669	WEIGHT, FLYWHL (BARREL-SHAPED PIN (GROOVE-F), 1.0" LONG) (MANUAL TRANS)	94-97	F (LT1, MM6, M28)	AR	3890194
128.	2-A17	0.669	BOLT, FLYWHL (MANUAL TRANS) (7/16-20 X 31/32)	93-97	F (LT1)	6	12337973
129.		8.940	PIN, GROOVE/F/.312X.375 CZ; 0.375" LENGTH (FLYWHL) (WEIGHT) (MANUAL TRANS)	93-97	.....	AR	274584
130.	2-A17	0.669	BOLT, FLYWHL (AUTO TRANS) (7/16-20 X 45/64) (0.685)	93-97	F (LT1)	6	14088764
131.		N.S.	WEIGHT, FLYWHL (AUTO TRANS)		.....		
132.	2-A10	0.137	SEAL, CR/SHF RR OIL (ALSO PART OF 135)	93-96	F (LT1)	1	10088158
	2-A10	0.137	SEAL, CR/SHF RR OIL (ALSO PART OF 135) (FREUDENBERG-NOK)	97	F (LT1)	1	12554314
133.	2-A10	0.137	BOLT, CR/SHF RR OIL SEAL HSG (1/4-20 X 7/8)	93-97	F (LT1)	2	14088561
134.		8.917	NUT, HFX, 1/4-20X.234, 284M, 69K, POR, 240 (CR/SHF RR OIL SEAL RET)	93-97	.....	1	9439915
135.	2-A10	0.137	HOUSING, CR/SHF RR OIL SEAL (INCL 124, 132) (0.659)	93-96	F (LT1)	1	14088556
	2-A10	0.137	HOUSING, CR/SHF RR OIL SEAL (INCL 124, 132)	97	F (LT1)	1	12554312
136.	2-A10	0.137	GASKET, CR/SHF RR OIL SEAL HSG	93-97	F (LT1)	1	12555771
137.	2-A10	0.137	STUD, CR/SHF RR OIL SEAL RET (1/4-20 X 2 3/16)	93-97	F (LT1)	1	14101058
138.	2-A16	0.646	BEARING, CLU PILOT	93-97	F (LT1)	1	14061685
139.	2-A10	0.096	BEARING KIT, CR/SHF (.010 U.S./STD FLG) (RR)	93-95	F (LT1)	1	12329793
	2-A10	0.096	BEARING KIT, CR/SHF (RR) (FEDERAL-MOGUL)	93-97	F (LT1)	1	12528826
	2-A10	0.096	BEARING KIT, CR/SHF (.002 U.S.)	96	F (LT1)	1	12329792
	2-A10	0.096	BEARING KIT, CR/SHF (#1, 2, 3, 4) (.010 U.S.)	93-94	F (LT1)	4	12329428
	2-A10	0.096	BEARING KIT, CR/SHF (#1, 2, 3, 4) (.001 U.S./STD) (REPL 0.0006" U.S. BRG KIT)	93-97	F (LT1)	4	12531215

cardiagn.com

	2-A10	0.096	BEARING KIT, CR/SHF (#1, 2, 3, 4) (STD) (IF CRNK JOURNAL MEAS. IS IN STD BRG. RANGE, MAY USE IN PLACE OF 12513950 (.0006 US), 10120992 (.001 US), OR 12531215 (.001 US) .)	95-97	F (LT1)	4	10120990
	2-A10	0.096	BEARING KIT, CR/SHF (#1, 2, 3, 4 STD) (STD)	93-94	F (LT1)	4	10120990
	2-A10	0.096	BEARING KIT, CR/SHF (#1, 2, 3, 4)) (.020 U.S.)	93-94	F (LT1)	4	12329429
	2-A10	0.096	BEARING KIT, CR/SHF (#1, 2, 3, 4)) (.002 U.S.)	93-95	F (LT1)	4	12329758
	2-A10	0.096	BEARING KIT, CR/SHF (#5) (STD) (RR)	93-97	F (LT1)	1	10120993
	2-A10	0.096	BEARING KIT, CR/SHF (RR) (.020 U.S./STD FLG)	93-94	F (LT1)	1	12329794
	2-A10	0.096	BEARING KIT, CR/SHF (RR .001"U.S./.008"O.S.FLG) (#5) (.001 U.S., .008 O.S. FLG)	93-95	F (LT1)	1	10181326
	2-A10	0.096	BEARING KIT, CR/SHF (RR #5) (STD FLG) (.002 U.S.)	93-94	F (LT1)	1	12329792
	2-A10	0.096	BEARING KIT, CR/SHF (RRSTD/.008"O.S. FLG) (STD) (.008 O.S. FLG)	93-95	F (LT1)	1	10181325
140.		N.S.	CAP, CR/SHF #5 BRG (ALSO PART OF 102)				
141.	2-A9	0.056	BOLT, CR/SHF BRG CAP (ALSO PART OF 102) (7/16-14X3.34)	93-97	F (LT1)	10	12561388
142.	2-A9	0.056	STUD, CR/SHF BRG CAP (HFH SPL 7/16-14X3.36 THD 1.12, 3/8-16 FLG END, STL) (7/16-14 X 3.38 THD 1.12, 3/8-14 FLG END, STL)	93-97	F (LT1)	3	12561389
143.		DISCON	CAP, CR/SHF BRG (#1, 2, 3, 4) (ALSO PART OF 102) (2-BOLT CAP) (0.095)	93-97	F (LT1)	4	3956688
144.	2-A16	0.659	BALANCER, CR/SHF (ON F CAR, HOLES DO NOT HAVE TO BE USED)	93-97	F (LT1)	1	12551138
145.		8.900	BOLT-HFH, 7/16-14X.88, .70 THD, .86 OD, 300M, PC (CR/SHF BAL)	93-97		3	9442448
146.		8.940	PIN, GROOVE/F/.312X.375 CZ; 0.375" LENGTH (CR/SHF BAL) (WEIGHT)	93-97		AR	274584
147.	2-A18	0.724	CHAIN, CM/SHF TMG (DIM 4.532 36 TEETH, DIM 4.522 18 TEETH)	93-97	F (LT1)	1	10128485
148.		8.900	BOLT, HEX .312-18X.750 300M PC (CM/SHF SPKT)	93-97		3	9424877
149.	2-A19	0.736	SPROCKET, CM/SHF (0.728)	93-94	F (LT1)	1	10128349
	2-A19	0.736	SPROCKET, CM/SHF	95-97	F (LT1)	1	10206039
150.		8.900	BOLT, 7/16 -20 X 2 1/4" (CR/SHF BAL)	93-97		1	9440024
151.	2-A16	0.662	WASHER, CR/SHF BALR	93-97	F (LT1)	1	10128306
152.	2-A16	0.659	HUB, CR/SHF BALR	93-95	F (LT1)	1	12553250
	2-A16	0.659	HUB, CR/SHF BALR	96-97	F (LT1)	1	12550097

cardiagn.com

153.	2-A19	0.723	SPROCKET, CR/SHF (18 TEETH) (.40/.41" TOOTH WIDTH)	93-97	F (LT1)	1	10128346
154.	2-A16	0.646	CRANKSHAFT, (INCL 120) (USE W/3752487 CLU PILOT BRG FOR MAN TRANS APPS)	93-97	F (LT1)	1	12556307
155.	2-A16	0.662	KEY, CR/SHF BALR	93-95	F (LT1)	1	10128303
	2-A16	0.662	KEY, CR/SHF BALR	96-97	F (LT1)	1	12550096
156.	2-B25	1.531	PLUG, ENG BLK OIL GAL (37/64X1/4, 1/4 MM HOLE IN CTR, 1008, PL)	93-96	F (LT1)	2	10110897
157.	2-A14	0.519	CAMSHAFT, ENG	93-94	F (LT1)	1	10224241
	2-A14	0.519	CAMSHAFT, ENG	95-97	F (LT1)	1	12551705
158.	2-A15	0.529	BOLT, CM/SHF RET (HEX SOC TORQ DR 1/4-20 X 1/2, 15/32 OD)	93-97	F (LT1)	2	14093637
159.	2-A15	0.529	RETAINER, CM/SHF	93-97	F (LT1)	1	10168501
160.	2-A15	0.539	BEARING, CM/SHF (#1) (ALSO PART OF 102)	93-97	F (LT1)	1	12453170
	2-A15	0.539	BEARING, CM/SHF (#2, RR) (ALSO PART OF 102)	93-97	F (LT1)	2	474006
	2-A15	0.539	BEARING, CM/SHF (#3, 4) (ALSO PART OF 102)	93-97	F (LT1)	2	12453172

NOTE 5: GOODWRENCH ENG CONSIST OF BLK,CR/SHF AND BEARING,PISTON AND ROD ASM,ROD & CM/SHF BEARING,CYL HD,OIL PUMP,OIL PAN,OIL PUMP,CM/SHF,RR SEAL.

RPO DEFINITIONS

GU2 – AXLE,REAR,2.73 RATIO
GU5 – AXLE,REAR,3.23 RATIO
LT1 – ENGINE–GAS, 8 CYL, 5.7L(5.7P),MFI,HO
MD8 – TRANSMISSION,AUTOMATIC 4–SPEED(THM700R4/4L60)
MM6 – TRANSMISSION MAN 6 SPD, BORG WARNER, 85MM, 1ST 2.66, 6TH 0.50, O/D
M28 – TRANSMISSION MAN, 6 SPD, BORG WARNER, 85MM, 3.36 1ST, 1.35 3RD
M29 – TRANSMISSION MAN, 6 SPD, BORG WARNER, 85MM, 2.97 1ST, 1.44 3RD
M30 – TRANSMISSION,AUTOMATIC 4 SPEED,4L60E,ELECTRONIC

cardiagn.com

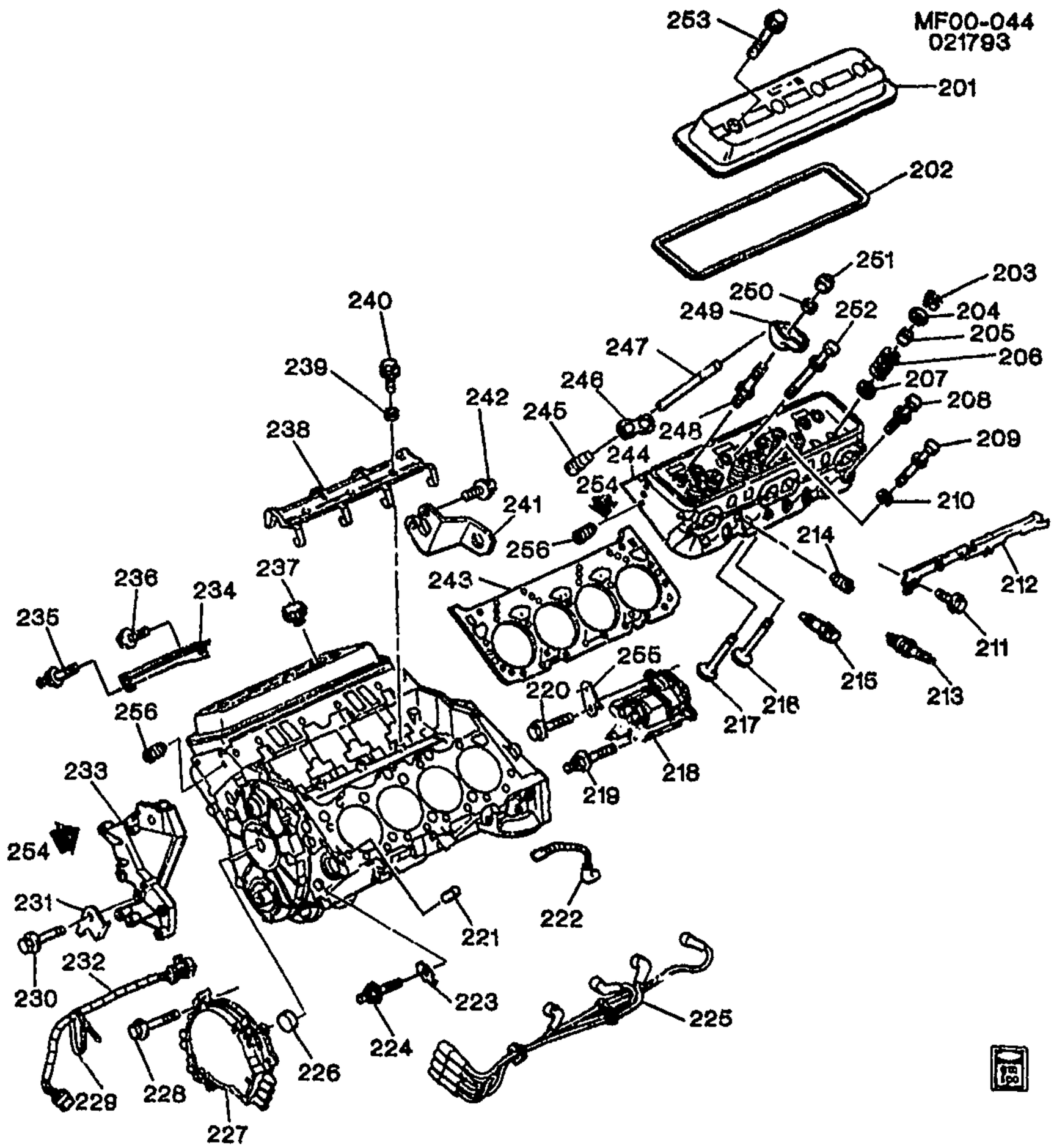

MF00-044

1993-1997 F ENGINE ASM-5.7L V8 PART 2 CYLINDER HEAD & RELATED PARTS (LT1/5.7P)

201.	2-A13	0.386	COVER, VLV RKR ARM	93-97	F (LT1)	LH	12555266
	2-A13	0.386	COVER, VLV RKR ARM	93-97	F (LT1)	RH	12555267
202.	2-A14	0.423	GASKET, VLV RKR ARM CVR	93-97	F (LT1)	2	10046089
203.	2-A13	0.310	KEY, VLV STEM	93-97	F (LT1)	32	24503856
204.	2-A13	0.309	CAP, VLV SPR	93	F (LT1)	16	10168424
	2-A13	0.309	CAP, VLV SPR	94-97	F (LT1)	16	10212808
205.	2-A13	0.308	SEAL, VLV STEM OIL	93	F (LT1)	16	10128383
	2-A13	0.308	SEAL, INT VLV STEM OIL	94-97	F (LT1)	8	10212810
	2-A13	0.308	SEAL, EXH VLV STEM OIL	94-97	F (LT1)	8	12564852
206.	2-A13	0.303	SPRING, VLV	93-97	F (LT1)	16	10206040
207.	2-A13	0.303	SHIM, VLV SPR (0.519)	93	F (LT1)	16	10168423
	2-A13	0.303	SHIM, VLV SPR	94-97	F (LT1)	16	10212809

cardiagn.com

	2-A12	0.293	BOLT, CYL HD (7/16-14 X 1.62)	95-97	F (LT1)	16	10168527
209.	2-A12	0.293	BOLT, CYL HD	93-94	F (LT1)	4	14098946
	2-A12	0.293	BOLT, CYL HD (MEDIUM 7/16-14 X 3 1/16, 300M)	95-97	F (LT1)	4	10168526
210.		8.929	WASHER, SPL FL .STEEL (.120X.440X.870 PL) (CYL HD)	93-97		4	3899696
211.		8.900	BOLT-HEX, .250 -20 X .5 (SPLG WIRE SUPT)	93-97		2	9442895
212.	2-L12	2.251	SUPPORT, SPLG WIRE (MID-ENGINE)	93-97	F (LT1)	LH	10232441
213.	2-L12	2.270	SPARK PLUG, (41-906) (AC-DELCO #41-906)	93-95	F (LT1)	8	5614244
	2-L12	2.270	SPARK PLUG, (41-943) (AC-DELCO #41-943)	96-97	F (LT1)	8	25166821
214.		8.971	PLUG, 3/8 -18, DRY SEAL (CYL HD CORE HOLE)	93-97		1	14090911
215.	2-B14	1.150	SENSOR, ENG COOL T/GA (3/8-18 THD) (2 TERM, CAN BE USED AS 1 TERM CONN) (AC-DELCO #213-77)	93-97	F (LT1)	1	25037332
216.	2-A13	0.297	VALVE, EXH (STD)	93	F (LT1)	8	10168514
	2-A13	0.297	VALVE, EXH (.0155 O.S.)	93	F (LT1)	8	10168516
	2-A13	0.297	VALVE, EXH (STD)	94-97	F (LT1)	8	12550909
	2-A13	0.297	VALVE, EXH (.0305 O.S.)	94-96	F (LT1)	8	12550913
217.	2-A12	0.296	VALVE, INT (STD)	94-97	F (LT1)	8	10241743
	2-A12	0.296	VALVE, INT (.0035 O.S.)	93	F (LT1)	8	10168466
	2-A12	0.296	VALVE, INT (.0155 O.S.)	93	F (LT1)	8	10168467
	2-A12	0.296	VALVE, INT (.0305 O.S.)	93	F (LT1)	8	10168468
	2-A12	0.296	VALVE, INT (STD)	93	F (LT1)	8	10168465
218.	2-L9	2.170	COIL, IGN (AC-DELCO #D535)	93	F (LT1)	1	1115315
	2-L9	2.170	COIL, IGN (AC-DELCO #D573)	94-95	F (LT1)	1	10477208
	2-L9	2.170	COIL, IGN (AC-DELCO #D577)	96-97	F (LT1)	1	10489421
219.		8.981	STUD, HEX 3/8-16X.80-3/8-16X.80 300M POR (IGN COIL)	93-97		1	14057279
220.		8.900	BOLT, HEX 3/8-16 X 3/4 PH, 300M STL (IGN COIL)	93-97		1	9424338
221.		8.939	PIN, DOWEL 5/16 X 9/16 STEEL (CYL HD LOC (ALSO PART OF PARTIAL ENGINE)) (AC-DELCO #585927)	93-97		4	585927
222.	2-L10	2.240	WIRE, IGN COIL (PART OF 225) (COIL WIRE WITH 1-90 DEGREE BOOT& 1-STRAIGHT BOOT) (AC-DELCO #340R)	93-95	F (LT1)	1	12096466
	2-L10	2.240	WIRE, IGN COIL (PART OF 225) (10" LG) (SECONDARY) (AC-DELCO #346U)	96-97	F (LT1)	1	12173578
223.	2-L12	2.251	SUPPORT, SPLG WIRE (FRT ENG) (USED ON 1993 & 1994 ONLY)	93-94	F (LT1)	1	10137659
224.	2-L12	2.251	STUD, SPLG WIRE SUPT (NOT REQ'D AFTER 1993) (2.183)	93	F (LT1)	1	12555065
225.	2-L10	2.239	WIRE KIT, SPLG (INCL 222) (INCL RH & LH SPLG WRG HARN & IGN COIL WRG HARN) (AC-DELCO #718B)	93	F (LT1)	1	12096417

cardiagn.com

	2-L10	2.239	WIRE KIT, SPLG (INCL 222) (INCL RH & LH SPLG WRG HARN & IGN COIL WRG HARN) (AC-DELCO #718G)	94-95	F (LT1)	1	12096439
	2-L10	2.239	WIRE KIT, SPLG (INCL 222) (AC-DELCO #748E)	96-97	F (LT1)	1	12173592
	2-L10	2.240	WIRE, SPLG #1 CYL (16" LG) (LEAD STYLE 16 VV) (AC-DELCO #340F)	94-95	F (LT1)	1	12096457
	2-L10	2.240	WIRE, SPLG #1 CYL (16" LG) (LEAD STYLE 16VV) (AC-DELCO #346H)	96-97	F (LT1)	1	12173570
	2-L10	2.240	WIRE, SPLG #2 CYL (18" LG) (LEAD STYLE 18 VV) (AC-DELCO #340G)	94-95	F (LT1)	1	12096458
	2-L10	2.240	WIRE, SPLG #2 CYL (AC-DELCO #350V)	96-97	F (LT1)	1	12192351
	2-L10	2.240	WIRE, SPLG #2 CYL (STYLE 18FFF, 7MM LEAD) (AC-DELCO #351A)	96-97	F (LT1)	1	12192356
	2-L10	2.240	WIRE, SPLG #3 CYL (18" LG) (LEAD STYLE 18 VV) (AC-DELCO #340G)	94-95	F (LT1)	1	12096458
	2-L10	2.240	WIRE, SPLG #3 CYL (STYLE 18FFF, 7MM LEAD) (AC-DELCO #351A)	96-97	F (LT1)	1	12192356
	2-L10	2.240	WIRE, SPLG #4 CYL (22"LONG) (LEAD STYLE 22-VV) (AC-DELCO #340H)	94-95	F (LT1)	1	12096459
	2-L10	2.240	WIRE, SPLG #4 CYL (22" LONG) (7MM DIA WIRE, STYLE 22FFF) (AC-DELCO #351C)	96-97	F (LT1)	1	12192358
	2-L10	2.240	WIRE, SPLG #5 CYL (24"LONG) (LEAD STYLE 24 VV) (AC-DELCO #340J)	94-95	F (LT1)	1	12096460
	2-L10	2.240	WIRE, SPLG #5 CYL (24" LONG) (7MM DIA WIRE, STYLE 24FFF) (AC-DELCO #351D)	96-97	F (LT1)	1	12192359
	2-L10	2.240	WIRE, SPLG #6 CYL (28" LG) (LEAD STYLE 28-VV) (AC-DELCO #340K)	94-95	F (LT1)	1	12096461
	2-L10	2.240	WIRE, SPLG #6 CYL (AC-DELCO #351F)	96-97	F (LT1)	1	12192361
	2-L10	2.240	WIRE, SPLG #7 CYL (36" LG) (LEAD STYLE 36VV) (AC-DELCO #340M)	94-95	F (LT1)	1	12096462
	2-L10	2.240	WIRE, SPLG #7 CYL (36" LG) (LEAD STYLE 36VV) (AC-DELCO #346S)	96-97	F (LT1)	1	12173576
	2-L10	2.240	WIRE, SPLG #8 CYL (32" LONG) (LEAD STYLE 32VV, 7MM DIA) (AC-DELCO #340N)	94-95	F (LT1)	1	12096465
	2-L10	2.240	WIRE, SPLG #8 CYL (32" LONG) (AC-DELCO #347C)	96-97	F (LT1)	1	12173587
226.	2-L14	2.372	SEAL, DISTR DRV SHF (ALSO PART OF ENGINE FRONT	95-97	F (LT1)	1	12552428

cardiagn.com

	2-L14	2.372	SEAL, DISTR DRV SHF (IN ENG FRT CVR) (ALSO PART OF ENGINE FRONT COVER (SEE ENGINE ASM PART 3)	93-94	F (LT1)	1	10128317
227.	2-L13	2.361	DISTRIBUTOR, (SEE" DISTRIBUTOR/IGNITION" ILLUSTRATION IN GRP. 2.000 FOR DETAILED VIEW.) (AC-DELCO #10457702)	93-94	F (LT1)	1	10457702
	2-L13	2.361	DISTRIBUTOR, (SEE" DISTRIBUTOR/IGNITION" ILLUSTRATION IN GRP. 2.000 FOR DETAILED VIEW.) (W/PUMP GSKT SHOULD BE ORDERED ALSO) (AC-DELCO #1104032) .	95-97	F (LT1)	1	1104032
228.		8.900	BOLT-HFH, 1/4-20X2, .75 THD, .52 OD, 280M, PO (DISTR)	93-97	.....	3	9442398
229.		8.965	STRAP, ADJ TIE (WRG HARN) (AC-DELCO #12337820)	93-97	.....	1	12337820
230.	2-L13	2.277	BOLT, GEN BRKT (HFH 3/8-16X2.50, 1.12 THD, 280M, .75 OD)	93-97	F (LT1)	2	10206119
231.	2-L12	2.251	SUPPORT, SPLG WIRE (LOW RT ON ACESS BRKT)	93-97	F (LT1, MD8)	1	10223670
232.	2-L14	2.383	HARNESS, DISTR WRG	93	F (LT1)	1	12106559
	2-L14	2.383	HARNESS, DISTR WRG (DISTR CONN IS APPX 1" LG)	94	F (LT1) (1ST DES)	1	12106559
	2-L14	2.383	HARNESS, DISTR WRG (DISTR CONN IS APPX 2" LG)	94	F (LT1) (2ND DES)	1	12130319
	2-L14	2.383	HARNESS, DISTR WRG (JUMPER WIRE)	95-97	F (LT1)	1	12130319
233.	2-L13	2.277	BRACKET, GEN & A/C CMPR & P/S PUMP	93-97	F (LT1)	1	10239875
	2-N27	9.171	BRACKET, GEN & A/C CMPR & P/S PUMP (2.277)	93-97	F (LT1)	1	10239875
234.	2-L12	2.251	SUPPORT, SPLG WIRE	93-95	F (LT1)	RH	10232442
	2-L12	2.251	SUPPORT, SPLG WIRE	96-97	F (LT1)	RH	12555897
235.		8.900	BOLT-HEX, .250 -20 X .5 (SPLG WIRE SUPT)	93-97	.....	1	9442895
236.	2-L12	2.251	STUD, SPLG WIRE SUPT (FASTENS 10096183)	93-97	F (LT1)	1	10137695
237.	2-C2	1.758	CAP, OIL FIL. (AC-DELCO #FC158)	93-97	F (LT1)	1	10108650
238.	2-A14	0.459	RETAINER, VLV LFTR GDE (1 PC) (RESTRICTOR)	93-97	F (LT1)	1	14101116
239.		8.929	WASHER (VLV LFTR GDE RET) ..	93-97	.....	3	120386
240.		8.900	BOLT, HEX 5/16-18X5/8 Z 280M (VLV LFTR GDE RET)	93-97	.....	3	180075
241.		N.S.	BRACKET, ENG LIFT RR		....		
242.		8.900	BOLT, HEX 3/8-16 X 3/4 PH, 300M STL (ENG LIFT RR BRKT) ..	93-97	.....	2	9424338
243.	2-A12	0.289	GASKET, CYL HD	93-97	F (LT1)	2	10168457
	2-A12	0.289	GASKET KIT, CYL HD	93	F (LT1)	1	12514368
	2-A12	0.289	GASKET KIT, CYL HD	94-97	F (LT1)	1	12369145
244.		DISCON	HEAD, CYL	93	F (LT1)	2	10205244
	2-A11	0.269	HEAD, CYL	94-97	F (LT1)	2	10168445
245.	2-A14	0.459	LIFTER, VLV (AC-DELCO	93-95	F (LT1)	16	5234890

cardiagn.com

	2-A14	0.459	LIFTER, VLV (AC-DELCO #HL123)	96-97	F (LT1)	16	17120735
246.	2-A14	0.439	GUIDE, VLV LFTR	93-97	F (LT1)	8	12550002
247.	2-A14	0.426	ROD, VLV PUSH (INCLS INSERTS)	93-95	F (LT1)	16	10046173
	2-A14	0.426	ROD, VLV PUSH (INCLS INSERT)	96-97	F (LT1)	16	10241740
248.	2-A14	0.429	STUD, VLV RKR ARM BALL	93-97	F (LT1)	16	12552126
249.	2-A13	0.333	ARM KIT, VLV RKR (INCL 250, 251) (STD THREADS) (INCLS ARM, BALL & NUT)	93-97	F (LT1)	16	10089648
250.		N.S.	BALL, VLV RKR ARM (PART OF 249)				
251.	2-A14	0.429	NUT, VLV RKR ARM (ALSO PART OF 249) (3/8-24 *)	93-97	F (LT1)	16	12557390
252.	2-A12	0.293	BOLT, CYL HD (LONG 7/16-14 X 3 51/64, 300M)	93-95	F (LT1)	14	10168525
	2-A12	0.293	BOLT, CYL HD (LONG 7/16-14 X 3 51/64, 300M)	96-97	F (LT1)	14	10168525
253.	2-A14	0.413	BOLT, VLV RKR ARM CVR	93-97	F (LT1)	8	12338092
254.		8.800	SEALANT-LOCTITE PIPE-W/TEFLON 50CC TUBE	93-97		AR	12346004
255.	2-M17	3.145	RETAINER, EVAP EMIS CNSTR PURGE TUBE	93-97	F (LT1)	1	10186192
256.		8.971	PLUG-SQ SOC, 1/4-18X.44 AM STD PIPE THD, STL, CZ (CYL HD CORE HOLE)	93-97		2	144011

RPO DEFINITIONS
LT1 -- ENGINE-GAS, 8 CYL, 5.7L(5.7P),MFI,HO
MD8 -- TRANSMISSION,AUTOMATIC 4-SPEED(THM700R4/4L60)

cardiagn.com

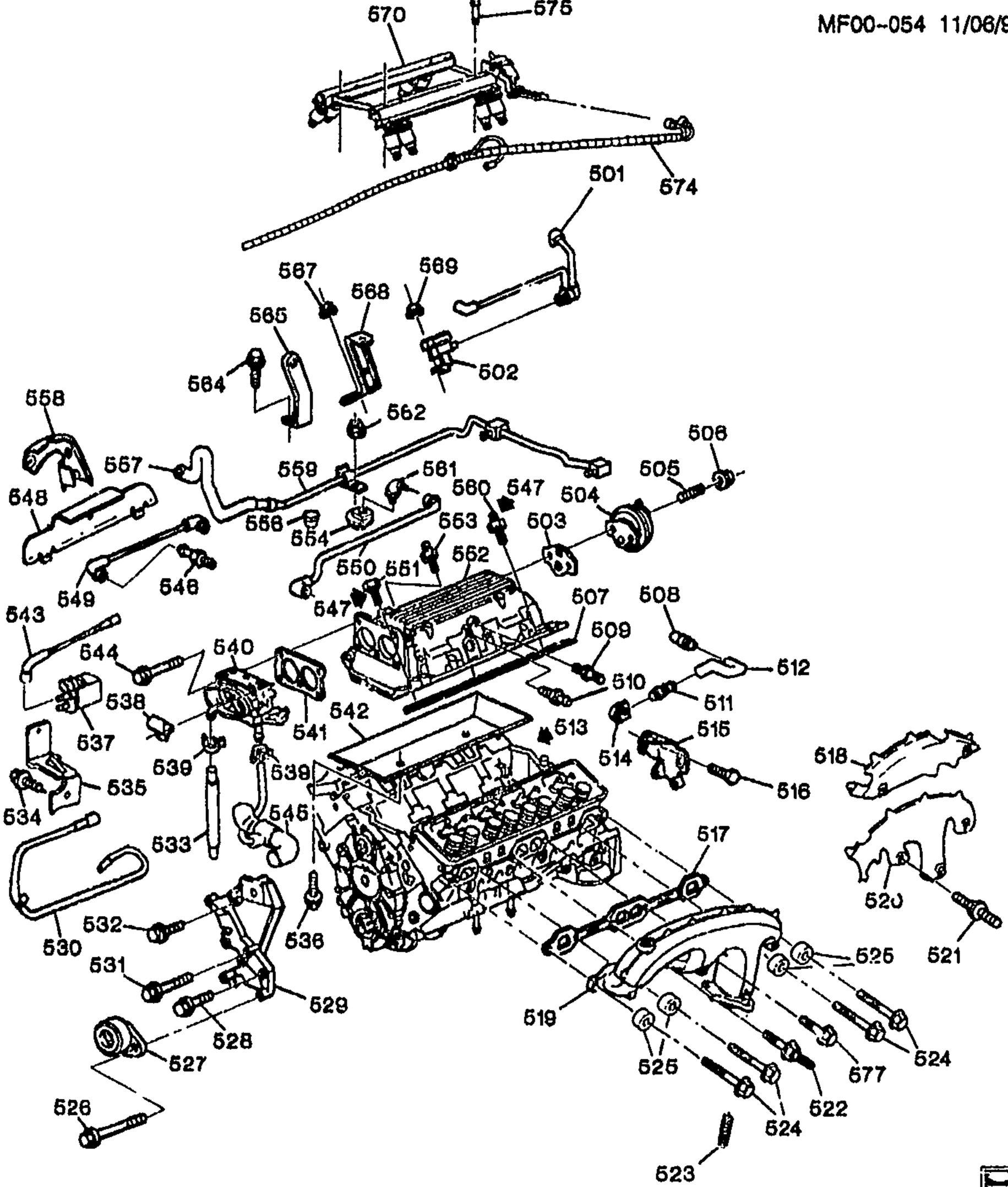

MF00-054

1994 F ENGINE ASM-5.7L V8 PART 5 MANIFOLDS & FUEL RELATED PARTS (LT1/5.7P)

501.	2-N6	3.675	HARNESS, EGR VLV VAC	94 F (LT1)	1	10105323
502.	2-M26	3.670	SOLENOID, EGR VAC REG VLV (SEE "EGR VALVE & RELATED PARTS" ILLUSTRATION IN GRP. 3.000 FOR DETAILED VIEW.) (AC-DELCO #214-396)	94 F (LT1)	1	1997223

cardiagn.com

503.	2–N8	3.680	GASKET, EGR VLV (AC–DELCO #219–21)	94	F (LT1)	1	12337972
504.	2–M26	3.670	VALVE, EGR (PROD #17092160) (FOR EXPORT REPL EGR VLV W/ EGR VLV CVR & VAC CAP) (AC–DELCO #214–5083)	94	F (LT1) (EXC NM8)	1	17113381
505.	2–N5	3.671	STUD, EGR VLV (5/16 X 18 X 1 43/64) (1.428)	94	F (LT1)	2	14080362
506.		8.917	NUT, HFH 5/16–18X.20 286M PC .67–OD (EGR VLV)	94		2	1359887
507.		N.S.	GASKET, INT MANIF (*KIT1)				
508.	2–B28	1.745	CONNECTOR, PCV VLV HOSE (1/4–18 NPTF W/3/8 NIPPLE)	94	F (LT1)	1	336018
509.	2–N8	3.680	CONNECTOR, EMIS CONT VAC HARN (3.278) (1 PORT HOSE CONN 4.5 OD, SAE 1113, PZOR)	94	F (LT1)	1	14082470
510.	2–N20	4.931	FITTING, P/B BOOS VAC TUBE	94	F (LT1)	1	10213160
511.	2–B28	1.745	VALVE, PCV (CV895C, 1 VACUUM PORT) (AC–DELCO #CV895C)	94	F (LT1)	1	25095452
512.	2–C3	1.762	HOSE, PCV VLV	94	F (LT1)	1	10128361
513.		8.800	SEALANT, SILICONE RTV SILICONE 6W) (*5 (AC–DELCO #1052915)	94		AR	1052915
514.	2–B28	1.745	GROMMET, PCV VLV (INT MANIF) (1.762)	94	F (LT1)	LH	10240678
	2–B28	1.745	GROMMET, PCV VLV (TOP RR VALVE CVR) (23/32 ID–1.22 OD)	94	F (LT1)	RH	10088126
515.	2–M24	3.454	BRACKET, ACCEL CONT CBL	94	F (LT1)	1	10192221
516.		8.900	BOLT–METRIC HEAVY HEX FLANGE HEAD, M6X1X12 (ACCEL CONT CBL BRKT)	94		3	11516061
517.	2–M19	3.272	GASKET, EXH MANIF (3.270)	94	F (LT1)	2	12552469
518.		N.S.	SHIELD, EXH MANIF INR HT (W/2 HOLES) (PART OF 519)				
519.	2–M24	3.601	MANIFOLD, EXH (INCL 518, 520, 521)	94	F (LT1)	RH	12550621
	2–M24	3.601	MANIFOLD, EXH (W/SHLDS) (INCL 518, 520, 521)	94	F (LT1)	LH	10207656
520.		N.S.	SHIELD, EXH MANIF INR HT (W/3 HOLES) (PART OF 519)				
521.	2–M24	3.601	STUD, EXH MANIF H/SHLD (ALSO PART OF 519)	94	F (LT1)	5	10229247
522.	2–M19	3.275	STUD, EXH MANIF (POSN 1–RH;T/W 12345493 ADHES) (USE W/12345493) (9.171)	94	F (LT1)	1	14037662
	2–M19	3.275	STUD, EXH MANIF (POSN 1, 3) (USE W/12345493) (INCLS SEALER ON FLG HD SIDE)	94	F (LT1)	2	10242055
523.	2–M26	3.613	STUD, EXH PIPE	94	F (LT1)	6	10220453
524.	2–M19	3.275	BOLT, EXH MANIF (HFH, 3/8–16X1.62, 1.12 THD, 0.76 OD, 280M, POR) (8.900)	94	F (LT1)	8	9441547
525.	2–M26	3.604	SPACER, EXH MANIF BOLT	94	F (LT1)	8	10231254
526.		8.900	BOLT, HWH, M8X1.25X40, SPL FULLTHD, AC PT, 10.9 PZOR (DRV BELT TENSR)	94		2	11515758
527.	2–B10	1.060	TENSIONER, DRV BELT	94	F (LT1)	1	12552509

cardiagn.com

528.	2-L13	2.277	BOLT, GEN BRKT (HFH 3/8-16X2.50, 1.12 THD, 280M, .75 OD) (3.655)	94	(LT1)	2	14084400
529.	2-L13	2.277	BRACKET, GEN & A/C CMPR & P/S PUMP	94	F (LT1)	1	10239875
	2-N21	6.606	BRACKET, GEN & A/C CMPR & P/S PUMP (2.277)	94	F (LT1)	1	10239875
530.	2-M17	3.145	TUBE, EVAP EMIS CNSTR PURGE	94	F (LT1)	1	10228934
531.	2-L13	2.277	BOLT, GEN BRKT	94	(LT1)	1	10206119
532.		8.900	BOLT, HFH 3/8-16X1.12 280M ZP FULL THD .75-OD (GEN BRKT)	94		2	9440071
533.	2-M22	3.337	HOSE, THROT BODY HTR OTLT	94	F (LT1)	1	10188002
534.		8.900	BOLT, HFH, M5X.8X10, 8.8 THD, 11.4 OD, 9.8, PO (EVAP EMIS CNSTR PURGE SOL VLV BRKT)	94		1	11514607
535.	2-M16	3.130	BRACKET, EVAP EMIS CNSTR PURGE SOL VLV	94	F (LT1)	1	10229207
536.		8.900	BOLT-METRIC HEAVY HEX FLANGE HEAD, M6X1X12 (INT MANIF OIL SPH SHLD)	94		4	11516061
537.	2-M16	3.130	VALVE, EVAP EMIS CNSTR PURGE SOL (2 PORT VAC, 2 BLADE TERM) (AC-DELCO #214-565)	94	F (LT1)	1	1997201
538.	2-M24	3.469	BRACKET, ACCEL CONT CBL SPH SHLD	94	F (LT1)	1	10242904
539.		8.948	CLAMP, WORM GEAR, 1/2-13/16 (THROT BODY HTR OLTL HOSE)	94		1	22527587
540.	2-M21	3.335	BODY, THROT (SEE "THROTTLE BODY" ILLUSTRATION IN GRP. 3.000 FOR DETAILED VIEW.) (AC-DELCO #17094163)	94	F (LT1)	1	17094163
541.	2-M22	3.336	GASKET, THROT BODY (*KIT2) (AC-DELCO #40-718)	94	F (LT1)	1	10105379
542.	2-M19	3.265	SHIELD, INT MANIF OIL SPH	94	F (LT1)	1	10128305
543.	2-M17	3.145	PIPE, EVAP EMIS CNSTR PURGE SOL VLV	94	F (LT1)	1	10105324
544.		8.900	BOLT, HFH M8X1.25X65 9.8 POR (THROT BODY)	94		4	11508083
545.	2-M22	3.337	HOSE, THROT BODY HTR OTLT	94	F (LT1)	1	10188002
546.	2-M21	3.278	FITTING, INT MANIF VAC (1 PORT HOSE CONN 4.5 OD, SAE 1113, PZOR)	94	F (LT1)	1	14082470
547.		8.800	SEALANT-LOCTITE PIPE-W/TEFLON 50CC TUBE	94		AR	12346004
548.		N.S.	SHIELD, EXH MANIF INR HT (W/3 HOLES)	94	(LT1)	1	
549.	2-M21	3.330	TUBE, FUEL PRESS REG VAC	94	F (LT1)	1	10216948
550.	2-C3	1.762	HOSE, PCV	94	F (LT1)	1	10128365
551.		8.900	BOLT, HFH 3/8-16X1.38 280M PZOR (INT MANIF)	94		6	9439918
552.	2-M19	3.265	MANIFOLD, INT	94	F (LT1)	1	12552137
553.	2-M19	3.275	STUD, INT MANIF ((ALSO ORDER 12346004 SEALER)) (3/8X16X1 3/8)	94	(LT1)	1	10106420

cardiagn.com

554.	2-B28	1.745	GROMMET, PCV VLV (INT MANIF) (1.762)	94	F (LT1)	LH	10240678
	2-B28	1.745	GROMMET, PCV VLV (TOP RR VALVE CVR) (23/32 ID-1.22 OD) .	94	F (LT1)	RH	10088126
556.	2-N8	3.682	PLUG, MAP SEN HOLE (8.153) ..	94	F (LT1)	1	3738198
557.	2-B13	1.097	HOSE, ENG COOL AIR BL (ALSO PART OF 559)	94	F (LT1)	1	10188004
558.		N.S.	SHIELD, EXH MANIF OTR HT (PART OF 519)		.....		
559.	2-B13	1.097	PIPE, ENG COOL AIR BL (INCL 557)	94	F (LT1)	1	10108635
560.	2-M19	3.275	STUD, INT MANIF (3/8X16X1-1/4) (W/ 6194M ADHES) (8.981)	94	(LT1)	5	336793
561.	2-C3	1.762	CONNECTOR, PCV HOSE	94	F (LT1)	RH	12550625
562.		8.917	NUT, .375 16 HEX (ENG COOL AIR BL PIPE)	94	.....	1	14057004
564.		8.900	BOLT, HFH 3/8-16X1.12 280M ZP FULL THD .75-OD (ENG LIFT FRT BRKT)	94	.....	2	9440071
565.		N.S.	BRACKET, ENG LIFT FRT		.....		
567.		8.917	NUT, .375 16 HEX (ACCEL CONT CBL CLIP BRKT)	94	.....	1	14057004
568.	2-M17	3.162	BRACKET, ACCEL CONT CBL CLIP	94	F (LT1)	1	12553052
569.		8.917	NUT, .375 16 HEX (EGR C/VLV RLY SOL)	94	.....	1	14057004
570.		N.S.	RAIL, M/PORT F/INJN FUEL (SEE GROUP 3.000 "FUEL INJECTOR RAIL" FOR DETAILED ILLUSTRATED VIEW) (COMPONENT PART SERVICED)		.....		
574.	2-M18	3.163	PIPE, FUEL FEED & RTN	94	F67 (LT1)	1	10258442
	2-M18	3.163	PIPE, FUEL FEED & RTN	94	F87 (LT1)	1	10258441
575.	2-M21	3.330	BOLT, F/INJN FUEL RL (6X1X35) (9.8 PEOR) (8.900)	94	F (LT1)	4	11514667
577.	2-M19	3.275	BOLT, EXH MANIF (3/8-16X1 3/16)	94	F (LT1)	2	3909821

SERVICE KITS

1.	2-M19	3.270	GASKET KIT, INT MANIF (INCL 507) (KIT CONTAINS: GASKET FOR INTAKE MANIFOLD.)	94	F (LT1)	1	12524653
2.	2-M22	3.336	GASKET KIT, THROT BODY (INCL 541) (KIT CONTAINS: GASKET FOR THROT BODY) (AC-DELCO #40-743)	94	F (LT1)	1	17113074

RPO DEFINITIONS

LT1 - ENGINE-GAS, 8 CYL, 5.7L(5.7P),MFI,HO
NM8 - EMISSION SYSTEM,LEADED FUEL(EXPORT)

cardiagn.com

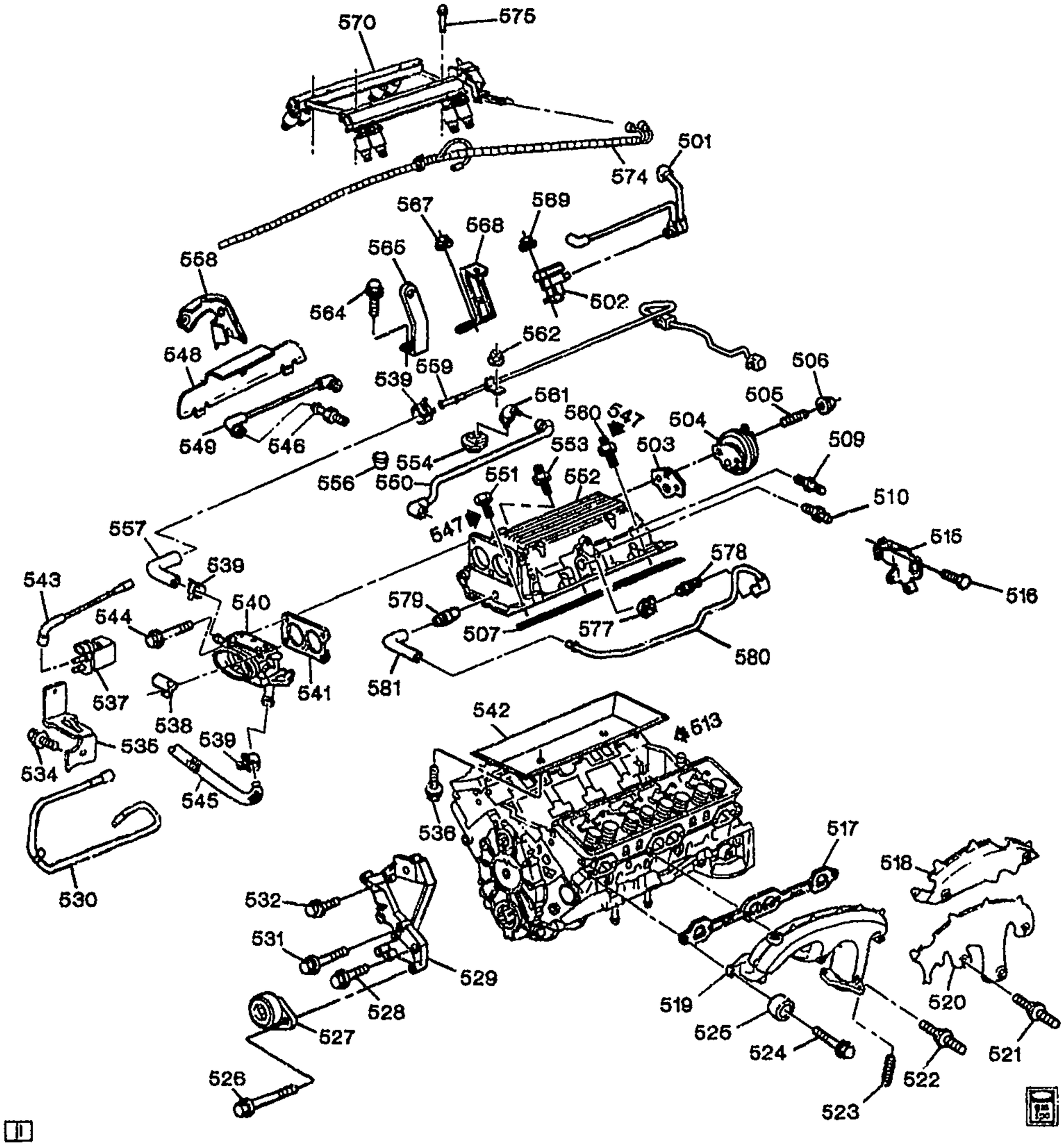

MF00-063

1995-1997 F ENGINE ASM-5.7L V8 PART 5 MANIFOLDS & FUEL RELATED PARTS (LT1/5.7P)

501.	2-N5	3.675	HARNESS, EGR VLV VAC	95-97	F (LT1)	1	10105323
502.	2-M26	3.670	SOLENOID, EGR VAC REG VLV (SEE GROUP 3.000 "EGR VALVE & RELATED PARTS" FOR DETAILED ILLUSTRATED VIEW.) (AC-DELCO #214-396)	95-97	F (LT1)	1	1997223

cardiagn.com

503.	2–N8	3.680	GASKET, EGR VLV (AC–DELCO #219–21)	95–97	F (LT1)	1	12337972
504.	2–M26	3.670	VALVE, EGR (PROD #17092160) (FOR EXPORT REPL EGR VLV W/ EGR VLV CVR & VAC CAP) (AC–DELCO #214–5083)	95–97	F (LT1, MM6) (EXC NM8)	1	17113381
	2–M26	3.670	VALVE, EGR (PROD #17092160) (FOR EXPORT REPL EGR VLV W/ EGR VLV CVR & VAC CAP) (AC–DELCO #214–5083)	95	F (LT1, M30, NA5) (EXC NM8)	1	17113381
	2–M26	3.670	VALVE, EGR (PROD 17092172) (FOR EXPORT REPL EGR W/ EGR CVR & VAC CAP) (AC–DELCO #214–5084)	95	F (LT1, M30, NB6) (EXC NM8)	1	17113382
	2–M26	3.670	VALVE, EGR (PROD 17092172) (FOR EXPORT REPL EGR W/ EGR CVR & VAC CAP) (AC–DELCO #214–5084)	96–97	F (LT1, M30) (EXC NM8)	1	17113382
505.	2–N5	3.671	STUD, EGR VLV (5/16 X 18 X 1 43/64) (1.428)	95–97	F (LT1)	2	14080362
506.		8.917	NUT, HFH 5/16–18X.20 286M PC .67–OD (EGR VLV)	95–97		2	1359887
507.		N.S.	GASKET, INT MANIF (*KIT1)				
509.	2–N8	3.680	CONNECTOR, EMIS CONT VAC HARN (3.278) (1 PORT HOSE CONN 4.5 OD, SAE 1113, PZOR)	95–97	F (LT1)	1	14082470
510.	2–N20	4.931	FITTING, P/B BOOS VAC TUBE	95–97	F (LT1)	1	10213160
513.		8.800	SEALANT, SILICONE RTV SILICONE 6W) (*5 (AC–DELCO #1052915)	95–97		AR	1052915
515.	2–M24	3.454	BRACKET, ACCEL CONT CBL	95–97	F (LT1)	1	10192221
516.		8.900	BOLT–METRIC HEAVY HEX FLANGE HEAD, M6X1X12 (ACCEL CONT CBL BRKT)	95–97		3	11516061
517.	2–M19	3.272	GASKET, EXH MANIF (3.270)	95–97	F (LT1)	2	12552469
518.		N.S.	SHIELD, EXH MANIF INR HT (W/2 HOLES) (PART OF 519–MANIFOLD--LH ONLY)				
519.	2–M24	3.601	MANIFOLD, EXH (INCL 518, 520, 521) (A.I.R. PIPE FITS IN MANIF W/MALE CONN)	95	F (LT1, M30, NB6) (2ND DES)	LH	12552903
	2–M24	3.601	MANIFOLD, EXH (INCL 518, 520, 521) (A.I.R. PIPE FITS DIRECTLY IN MANIF)	95	F (LT1, M30, NB6) (EXC KC4) (1ST DES)	LH	12553728
	2–M24	3.601	MANIFOLD, EXH (INCL 518, 520, 521)	96–97	F (LT1)	LH	12552903
	2–M24	3.601	MANIFOLD, EXH (W/SHLDS) (INCL 518, 520, 521) (A.I.R. PIPE FITS DIRECTLY IN MANIF)	95	F (LT1, MM6) (1ST DES)	LH	10207656
	2–M24	3.601	MANIFOLD, EXH (W/SHLDS) (INCL 518, 520, 521) (A.I.R. PIPE FITS DIRECTLY IN MANIF)	95	F (LT1, M30, NA5) (1ST DES)	LH	10207656
	2–M24	3.601	MANIFOLD, EXH (W/SHLDS) (INCL 518, 520, 521) (A.I.R. PIPE FITS IN MANIF W/MALE CONN)	95	F (LT1, MM6) (2ND DES)	LH	12552902
	2–M24	3.601	MANIFOLD, EXH (W/SHLDS) (INCL 518, 520, 521) (A.I.R. PIPE FITS IN MANIF W/MALE CONN)	95	F (LT1, M30, NA5) (2ND DES)	LH	12552902

cardiagn.com

	2–M24	3.601	MANIFOLD, EXH (INCL 548) (A.I.R. PIPE FITS DIRECTLY IN MANIF)	95	F (LT1, MM6) (1ST DES)	RH		12550621
	2–M24	3.601	MANIFOLD, EXH (INCL 548) (A.I.R. PIPE FITS DIRECTLY IN MANIF)	95	F (LT1, M30, NA5) (1ST DES)	RH		12550621
	2–M24	3.601	MANIFOLD, EXH (INCL 548) (A.I.R. PIPE FITS IN MANIF W/MALE CONN)	95	F (LT1, MM6) (2ND DES)	RH		12552904
	2–M24	3.601	MANIFOLD, EXH (INCL 548) (A.I.R. PIPE FITS IN MANIF W/MALE CONN)	95	F (LT1, M30, NA5) (2ND DES)	RH		12552904
	2–M24	3.601	MANIFOLD, EXH (W/A.I.R. PLUG) (INCL 548)	95	F (LT1, M30, NB6) (1ST DES)	RH		12524289
	2–M24	3.601	MANIFOLD, EXH (W/A.I.R. PLUG) (INCL 548) (A.I.R. PIPE FITS IN MANIF W/MALE CONN)	95	F (LT1, M30, NB6) (2ND DES)	RH		12552905
	2–M24	3.601	MANIFOLD, EXH (W/A.I.R. PLUG) (INCL 548)	96–97	F (LT1)	RH		12552905
520.		N.S.	SHIELD, EXH MANIF INR HT (W/3 HOLES) (PART OF 519–MANIFOLD LH ONLY)					
521.	2–M24	3.601	STUD, EXH MANIF H/SHLD (ALSO PART OF 519–MANIFOLD LH ONLY)	95–97	F (LT1)		5	10229247
522.	2–M19	3.275	STUD, EXH MANIF (POSN 1–RH;T/W 12345493 ADHES) (USE W/12345493) (9.171)	95–97	F (LT1)		1	14037662
	2–M19	3.275	STUD, EXH MANIF (POSN 1, 3) (USE W/12345493) (INCLS SEALER ON FLG HD SIDE)	95–97	F (LT1)		2	10242055
523.	2–M26	3.613	STUD, EXH PIPE	95–97	F (LT1)		6	10220453
524.	2–M19	3.275	BOLT, EXH MANIF (T/W 12345493 ADHES) (3/8–16X1 3/16)	95–97	F (LT1)		2	3909821
525.	2–M26	3.604	SPACER, EXH MANIF BOLT	95–97	F (LT1)		8	10231254
526.		8.900	BOLT, HWH, M8X1.25X40, SPL FULLTHD, AC PT, 10.9 PZOR (DRV BELT TENSR)	95–97			2	11515758
527.	2–B10	1.060	TENSIONER, DRV BELT	95–97	F (LT1)		1	12552509
528.	2–L13	2.277	BOLT, GEN BRKT (HFH 3/8–16X2.50, 1.12 THD, 280M, .75 OD) (3.655)	95–97	F (LT1)		2	14084400
529.	2–L13	2.277	BRACKET, GEN & A/C CMPR & P/S PUMP	95–97	F (LT1)		1	10239875
	2–N21	6.606	BRACKET, GEN & A/C CMPR & P/S PUMP (2.277)	95–97	F (LT1)		1	10239875
530.	2–M17	3.145	TUBE, EVAP EMIS CNSTR PURGE	95	F (LT1)		1	10228934
	2–M17	3.145	TUBE, EVAP EMIS CNSTR PURGE	96–97	F (LT1)		1	12555606
531.	2–L13	2.277	BOLT, GEN BRKT	95–97	F (LT1)		1	10206119
532.		8.900	BOLT, HFH 3/8–16X1.12 280M ZP FULL THD .75–OD (GEN BRKT)	95–97			2	9440071

cardiagn.com

534.		8.900	BOLT, HFH, M5X.8X10, 8.8 THD, 11.4 OD, 9.8, PO (EVAP EMIS CNSTR PURGE SOL VLV BRKT) .	95-97	.....	1	11514607
535.	2-M16	3.130	BRACKET, EVAP EMIS CNSTR PURGE SOL VLV	95	F (LT1)	1	10229207
	2-M16	3.130	BRACKET, EVAP EMIS CNSTR PURGE SOL VLV	96-97	F (LT1)	1	12551612
536.		8.900	BOLT-METRIC HEAVY HEX FLANGE HEAD, M6X1X12 (INT MANIF OIL SPH SHLD)	95-97	.....	4	11516061
537.	2-M16	3.130	VALVE, EVAP EMIS CNSTR PURGE SOL (2 PORT VAC, 2 BLADE TERM) (AC-DELCO #214-565)	95-97	F (LT1)	1	1997201
538.	2-M24	3.469	BRACKET, ACCEL CONT CBL SPH SHLD	95-97	F (LT1)	1	10242904
539.		8.948	CLAMP, WORM GEAR, 1/2-13/16 (THROT BODY HTR OLTL HOSE)	95-97	.....	1	22527587
540.	2-M21	3.335	BODY, THROT (SEE "THROTTLE BODY" ILLUSTRATION IN GRP. 3.000 FOR DETAILED VIEW.) (AC-DELCO #17095236)	95-97	F (LT1)	1	17095236
541.	2-M22	3.336	GASKET, THROT BODY (*KIT2) (AC-DELCO #40-718)	95-97	F (LT1)	1	10105379
542.	2-M19	3.265	SHIELD, INT MANIF OIL SPH	95-97	F (LT1)	1	10128305
543.	2-M17	3.145	PIPE, EVAP EMIS CNSTR PURGE SOL VLV	95-97	F (LT1)	1	10105324
544.		8.900	BOLT, HFH M8X1.25X65 9.8 POR (THROT BODY)	95-97	.....	4	11508083
545.	2-M22	3.337	HOSE, THROT BODY HTR OTLT .	95-97	F (LT1)	1	10261149
546.	2-M21	3.278	FITTING, INT MANIF VAC (1 PORT HOSE CONN 4.5 OD, SAE 1113, PZOR)	95-97	F (LT1)	1	14082470
547.		8.800	SEALANT-LOCTITE PIPE-W/TEFLON 50CC TUBE ...	95-97	.....	AR	12346004
548.		DISCON	SHIELD, EXH MANIF INR HT (W/3 HOLES) (PART OF 519-MANIFOLD-RH ONLY)	95-97	F (LT1)	1	
549.	2-M21	3.330	TUBE, FUEL PRESS REG VAC ..	95-97	F (LT1)	1	10216948
550.	2-C3	1.762	HOSE, PCV	95-97	F (LT1)	1	10128365
551.		8.900	BOLT, HFH 3/8-16X1.38 280M PZOR (INT MANIF)	95-97	.....	6	9439918
552.	2-M19	3.265	MANIFOLD, INT	95-97	F (LT1)	1	12552137
553.	2-M19	3.275	STUD, INT MANIF ((ALSO ORDER 12346004)) (3/8X16X1 3/8)	95-97	F (LT1)	5	10106420
554.	2-B28	1.745	GROMMET, PCV VLV (23/32 ID-1.22 OD)	95-97	F (LT1)	1	10088126
556.	2-N8	3.682	PLUG, MAP SEN HOLE (8.153) ..	95-97	F (LT1)	1	3738198
557.	2-M22	3.337	HOSE, THROT BODY HTR INL ..	95-97	F (LT1)	1	12553625
558.		N.S.	SHIELD, EXH MANIF OTR HT (PART OF 519)		.....		
559.	2-B13	1.097	PIPE, ENG COOL AIR BL (INCLUDES BOLTS & SEALS) ...	95-97	F (LT1)	1	12556260
	2-B13	1.097	SEAL, ENG COOL AIR BL PIPE (O RING)	95-97	F (LT1)	4	10108689

cardiagn.com

560.	2-M19	3.275	STUD, INT MANIF (3/8X16X1-1/4) (W/ 6194M ADHES) (8.981)	95-97	F (LT1)	5	336793
561.	2-C3	1.762	CONNECTOR, PCV HOSE	95-97	F (LT1)	RH	12550625
562.		8.917	NUT, .375 16 HEX (ENG COOL AIR BL PIPE)	95-97		1	14057004
564.		8.900	BOLT, HFH 3/8-16X1.12 280M ZP FULL THD .75-OD (ENG LIFT FRT BRKT)	95-97		2	9440071
565.		N.S.	BRACKET, ENG LIFT FRT				
567.		8.917	NUT, .375 16 HEX (ACCEL CONT CBL CLIP BRKT)	95-97		1	14057004
568.	2-M17	3.162	BRACKET, ACCEL CONT CBL CLIP	95-97	F (LT1)	1	12553052
569.		8.917	NUT, .375 16 HEX (EGR C/VLV RLY SOL)	95-97		1	14057004
570.	2-M21	3.330	RAIL, M/PORT F/INJN FUEL (SEE "FUEL INJECTOR RAIL" ILLUSTRATION IN GRP. 3.000 FOR DETAILED VIEW.)				
574.	2-M18	3.163	PIPE, FUEL FEED & RTN	95-97	F67 (LT1)	1	10258442
	2-M18	3.163	PIPE, FUEL FEED & RTN	95-97	F87 (LT1)	1	10258441
575.	2-M21	3.330	BOLT, F/INJN FUEL RL (6X1X35) (9.8 PEOR) (8.900)	95-97	F (LT1)	4	11514667
577.	2-B28	1.745	GROMMET, PCV VLV (INT MANIF) (1.762)	95-97	F (LT1)	LH	10240678
	2-B28	1.745	GROMMET, PCV VLV (TOP RR VALVE CVR) (23/32 ID-1.22 OD)	95-97	F (LT1)	RH	10088126
578.	2-B28	1.745	VALVE, PCV (CV895C, 1 VACUUM PORT) (AC-DELCO #CV895C)	95-97	F (LT1)	1	25095452
579.	2-B28	1.745	CONNECTOR, PCV VLV HOSE	95-97	F (LT1)	1	336018
580.	2-C3	1.762	PIPE, PCV VLV	95-97	F (LT1)	1	12556257
581.	2-C3	1.762	HOSE, PCV VLV	95-97	F (LT1)	1	12551389

SERVICE KITS

1.	2-M19	3.270	GASKET KIT, INT MANIF (INCL 507) (KIT CONTAINS: GASKET FOR INTAKE MANIFOLD.)	95-97	F (LT1)	1	12524653
2.	2-M22	3.336	GASKET KIT, THROT BODY (INCL 541) (KIT CONTAINS: GASKET FOR THROT BODY) (AC-DELCO #40-743)	95-97	F (LT1)	1	17113074

RPO DEFINITIONS
KC4 – COOLING SYSTEM,ENGINE OIL
LT1 – ENGINE-GAS, 8 CYL, 5.7L(5.7P),MFI,HO
MM6 – TRANSMISSION MAN 6 SPD, BORG WARNER, 85MM, 1ST 2.66, 6TH 0.50, O/D
M30 – TRANSMISSION,AUTOMATIC 4 SPEED,4L60E,ELECTRONIC
NA5 – EMISSION SYSTEM,FEDERAL REQUIREMENTS
NB6 – EMISSION SYSTEM CALIFORNIA,TIER 1
NM8 – EMISSION SYSTEM,LEADED FUEL(EXPORT)

cardiagn.com

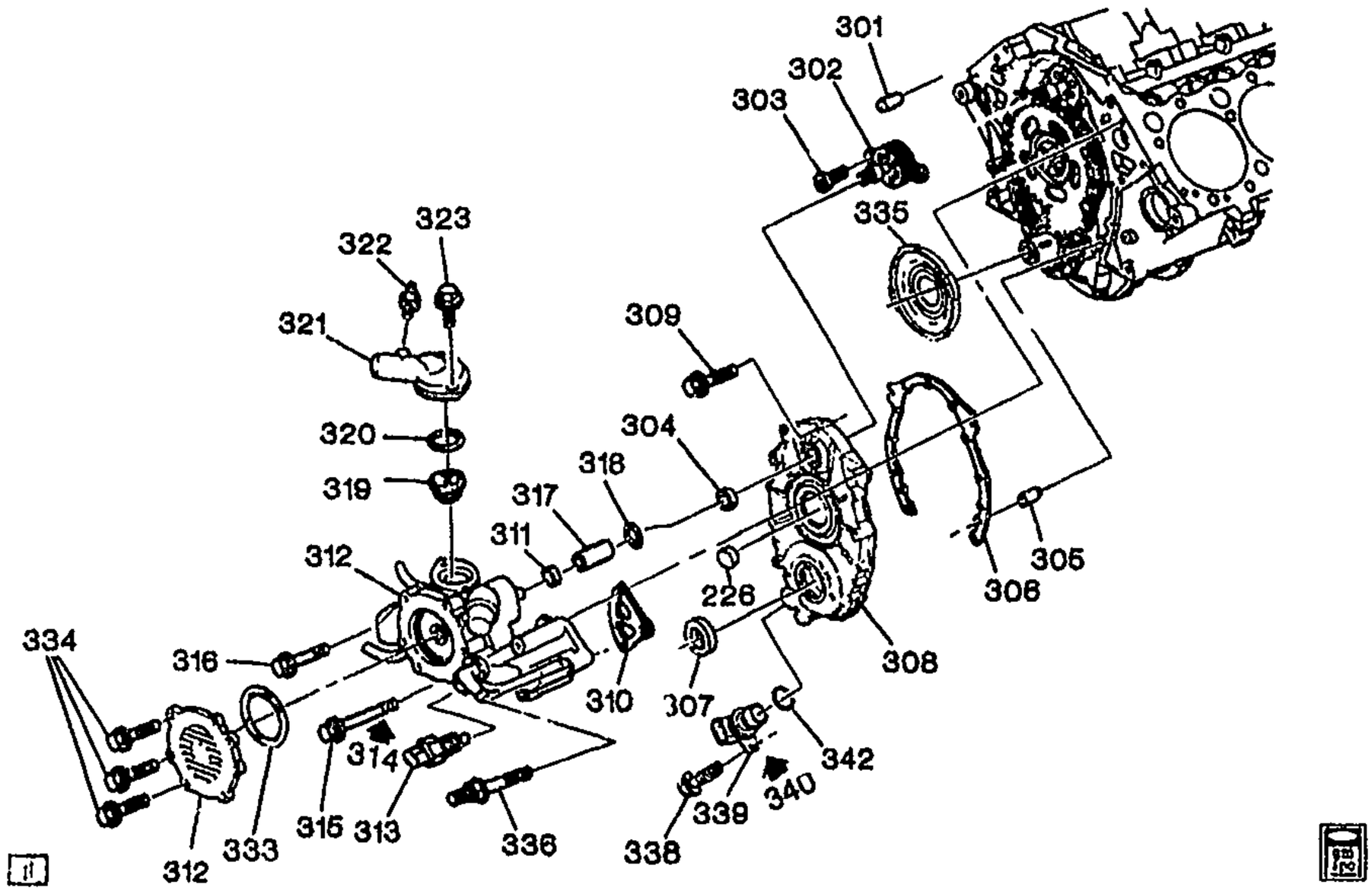

1996-1997 F ENGINE ASM-5.7L V8 PART 3 FRONT COVER & COOLING (LT1/5.7P)

226.	2-L14	2.372	SEAL, DISTR DRV SHF (PART OF 308) (2.363)	96-97	F (LT1)	1	12552428
301.	2-B12	1.079	PIN, W/PMP LOC (ALSO PART OF PARTIAL ENGINE) (DOWELL, 0.31X1.25, STL-HRD, PL, CHAM ENDS)	96-97	F (LT1)	1	10128487
302.	2-B13	1.105	SHAFT, W/PMP DRV	96-97	F (LT1)	1	10219554
303.	2-B13	1.105	BOLT, W/PMP DRV SHF BRG RET (HEX SOC TORQ DR 1/4-20 X 1/2, 15/32 OD) (0.529)	96-97	F (LT1)	2	14093637
304.	2-B13	1.123	SEAL, W/PMP BRG (ALSO PART OF 308)	96-97	F (LT1)	1	10217686
305.	2-B28	1.723	PIN, (1/4 X 5/8) (ENG FRT CVR LOC) (8.939)	96-97		2	12554553
306.	2-A11	0.207	GASKET, ENG FRT CVR	96-97	F (LT1)	1	10128293
307.	2-A11	0.213	SEAL, CR/SHF FRT OIL (ALSO PART OF 308) (61.5MM O.D. W/PART NUMBER STAMPING)	96-97	F (LT1)	1	10128316
308.	2-A11	0.206	COVER, ENG FRT (INCL 304, 307) (ALSO INCLUDES DISTRIBUTOR SEAL (SEE PART 2).)	96-97	F (LT1)	1	12552427
309.		8.900	BOLT, FLG HEX HD (1/4-20X1 3/8 .52 OD, .75 THD, 280M, PO) (ENG FRT CVR)	96-97		8	9442397

cardiagn.com

310.	2-B12	1.079	GASKET, W/PMP (ALSO PART OF 312) (ALSO PART OF DISTRIBUTOR ASSEMBLY (SEE PART 2) .)	96-97	F (LT1)	2	10128343
311.	2-B13	1.123	SEAL, W/PMP CVR (O RING) (1.114)	96-97	F (LT1)	1	10128329
312.	2-B12	1.069	PUMP KIT, WAT (INCL 310) (AC-DELCO #251-556)	96-97	F (LT1)	1	12527741
313.	2-N8	3.682	SENSOR, ENG COOL TEMP (AT WATER PUMP) (2-WAY M) (AC-DELCO #213-310)	96-97	F (LT1)	1	12146312
	2-B14	1.150	CONNECTOR, SEN-ENG COOL TEMP (AT WATER PUMP) (BLACK) (2-WAY F W/LEADS) (2.383) (AC-DELCO #PT169)	96-97	F (LT1)	1	12101899
314.		8.800	SEALANT-LOCTITE PIPE-W/TEFLON 50CC TUBE	96-97		AR	12346004
315.		8.900	BOLT, HFH, 3/8-16X4, 1.12 THD, .75 OD, 280M, PC (W/PMP)	96-97		4	9423592
316.		8.900	BOLT/SCREW-HEX FLG HD, 3/8"-16 X 2" (W/PMP)	96-97		2	9440073
317.	2-B13	1.105	COUPLING, W/PMP DRV SHF	96-97	F (LT1)	1	10128334
318.	2-B13	1.105	SEAL, W/PMP DRV SHF	96-97	F (LT1)	1	12553792
319.	2-B19	1.246	THERMOSTAT, ENG COOL (180 DEG) (INCL 320) (AC-DELCO #131-100)	96-97	F (LT1)	1	12555290
320.	2-B20	1.252	SEAL, ENG COOL THERM (O RING) (ALSO PART OF 319) (AC-DELCO #12551507)	96-97	F (LT1)	1	12551507
321.	2-B12	1.073	INLET, W/PMP (W/THERM HSG & BLEDR SCREW) (INCL 322)	96-97	F (LT1)	1	10108667
322.	2-B8	1.035	VALVE, ENG COOL AIR BL (ALSO PART OF 321)	96-97	F (LT1)	1	10070107
323.		8.900	BOLT, HFH, M6X1X25, 10.9, FULL, PS (W/PMP INL)	96-97		2	22539278
333.	2-B13	1.123	SEAL, W/PMP CVR (O RING) (ALSO PART OF 312) (1.114)	96-97	F (LT1)	1	10128329
334.		8.900	BOLT, M6X1X16, 13.5 THD, 14.2 OD, 9.8, SN-ZN (W/PMP CVR)	96-97		AR	11517517
335.	2-L14	2.383	RING, CR/SHF POSN SEN RELUCTOR	96-97	F (LT1)	1	10190917
336.	2-B12	1.079	STUD, W/PMP	96-97	F (LT1)	1	10223560
338.		8.900	BOLT-METRIC HEAVY HEX FLANGE HEAD, M6X1X12 (CR/SHF POSN SEN)	97	F (LT1)	1	11516061
		8.900	BOLT, M6X1X16, 13.5 THD, 14.2 OD, 9.8, SN-ZN (CR/SHF POSN SEN)	96	F (LT1)	1	11517517
339.	2-L14	2.383	SENSOR, CR/SHF POSN (AC-DELCO #213-314)	96-97	F (LT1)	1	10456534
	2-L14	2.383	CONNECTOR, SEN-CR/SHF POSN (BLACK) (3-WAY F) (W/LEADS) (2.535) (AC-DELCO #PT117)	96-97	F (LT1)	1	12085495

cardiagn.com

						GM00-341P
340.	8.800	**LUBRICANT**, RUBBER 5 GAL (LUBRICANT, CR/SHF POSN SEN)	96–97	F (LT1)	AR	12345884
342.	N.S.	**SEAL**, CR/SHF POSN SEN (O RING) (PART OF 339)		.....	1	

RPO DEFINITIONS
LT1 – ENGINE–GAS, 8 CYL, 5.7L(5.7P),MFI,HO

cardiagn.com

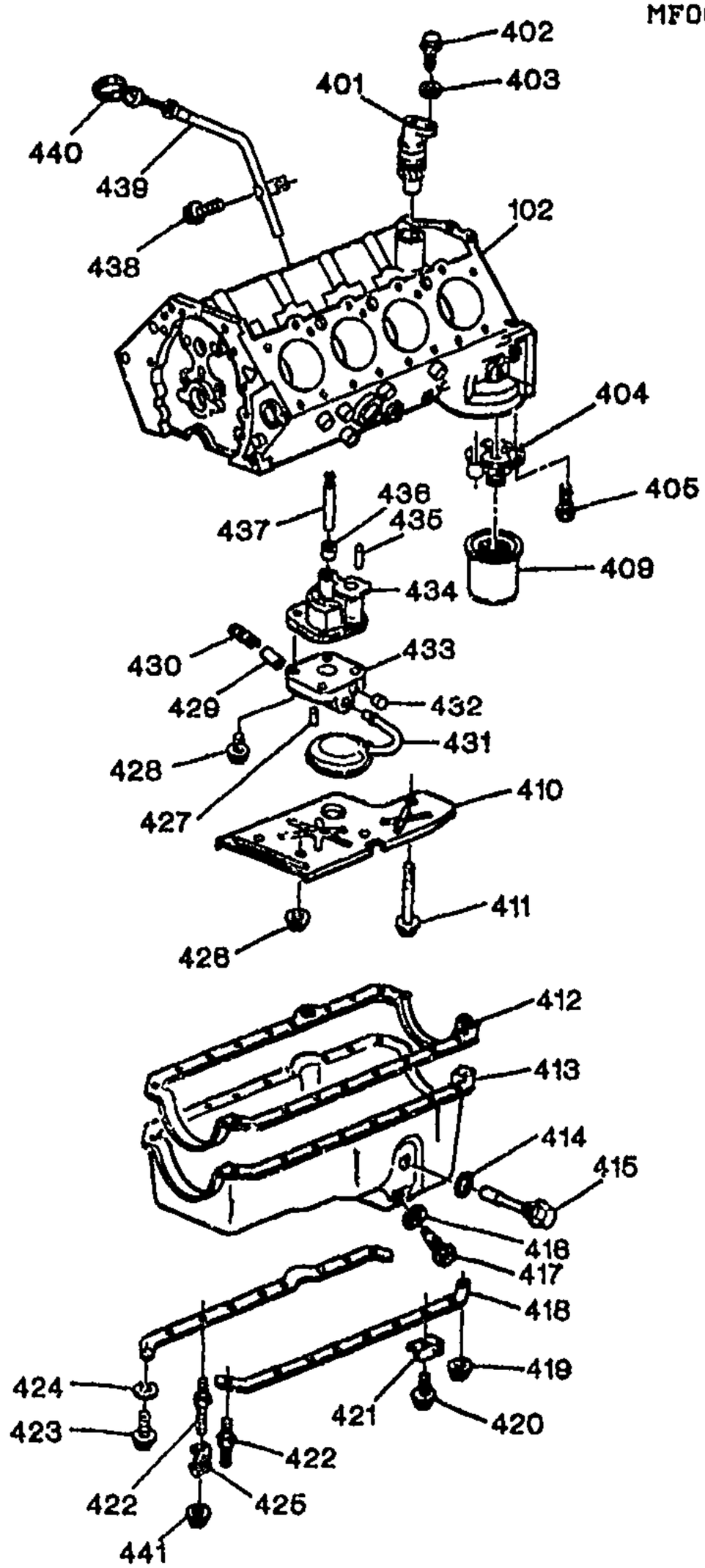

MF00-060

1996-1997 F ENGINE ASM-5.7L V8 PART 4 OIL PUMP, PAN & RELATED PARTS (LT1/5.7P)

102.		N.S.	BLOCK, ENG (CONSISTS OF ALL THE PARTS ON "ENGINE ASM. PARTS 1 THRU 5" ILLUSTRATIONS IN GRP. 0.000.) .	.....		
401.	2-B26	1.639	DRIVE, O/PMP (AC-DELCO #1103868)	96-97 F (LT1)	1	1103868

cardiagn.com

402.		8.900	BOLT, HEX .312-18X.750 300M PC (O/PMP DRV SHF)	96-97	.....	1	9424877
403.		8.929	WASHER, FLAT 5/16X5/8X1/16 ZP HARD (O/PMP DRV SHF)	96-97	.....	1	2436162
404.	2-C5	1.840	ADAPTER, OIL FLTR (SEE "ENGINE OIL COOLER LINES" ILLUSTRATION IN GRP. 1.000 FOR DETAILED VIEW.)	96	F (LT1, KC4)	1	10055722
	2-C5	1.840	ADAPTER, OIL FLTR (SEE "ENGINE OIL COOLER LINES" ILLUSTRATION IN GRP. 1.000 FOR DETAILED VIEW.) (INCLS ADAP, PLUG, SPR&VLV)	96-97	F (LT1)	1	3952301
405.	2-C5	1.840	BOLT, OIL FLTR ADAP (.312-18X1.25 PL) (8.900)	96-97	F (LT1)	2	3951644
409.	2-C4	1.836	FILTER, OIL (AC-DELCO #PF25)	96-97	F (LT1)	1	6438261
	2-C4	1.836	FILTER, OIL (AC-DELCO #UPF25)	96-97	F (LT1)	1	25322833
	2-C4	1.836	FILTER, OIL (AC-DELCO #SPF25)	96-97	F (LT1)	1	25325405
410.	2-B23	1.430	DEFLECTOR, CR/SHF OIL	96-97	F (LT1)	1	12554816
411.	2-B27	1.652	BOLT, O/PMP (7/16-14X2 3/8) ..	96-97	F (LT1)	1	10046007
412.	2-B23	1.429	GASKET, OIL PAN	96-97	F (LT1)	1	14088505
413.	2-B22	1.426	PAN, OIL	96-97	F (LT1)	1	12557557
414.	2-B23	1.516	SEAL, ENG OIL LVL SEN (ALSO PART OF 415) (NOT REQUIRED FOR 1997)	96	F (LT1)	1	10151633
415.	2-B23	1.516	SWITCH, ENG OIL LVL IND (INCLS 414)	96	F (LT1)	1	24507190
	2-B23	1.516	SWITCH, ENG OIL LVL IND	97	F (LT1)	1	24507190
	2-B23	1.516	CONNECTOR, SEN-ENG OIL LVL (BLACK) (2-WAY F W/LEADS) (3.670) (AC-DELCO #PT374)	96-97	F (LT1)	2	12102747
416.	2-B23	1.456	GASKET, OIL PAN DRN PLUG ...	96-97	F (LT1)	1	14090908
417.	2-B23	1.453	PLUG, OIL PAN DRN (1/2-20, 81LG) (HAS ENGLISH THDS) (FOR 2ND DES SEE 24100042 METRIC THREADS))	96	F (LT1) (1ST DES)	1	3921988
	2-B23	1.453	PLUG, OIL PAN DRN (M12X1.75-6GX44.45) (W/MAGNET & SEAL) (HAS METRIC THDS) (FOR 1ST DES SEE 3921988 ENGLISH THDS) ..	97	F (LT1) (2ND DES)	1	24100042
418.	2-B22	1.426	REINFORCEMENT, OIL PAN	96-97	F (LT1)	LH	12553058
	2-B22	1.426	REINFORCEMENT, OIL PAN	96-97	F (LT1)	RH	12553059
419.		8.915	NUT, HEX (5/16-18X.25 286M POR) (OIL PAN)	96-97	.....	2	12338130
420.		8.900	BOLT, HFH 1/4-20X.62 280M POR (OIL PAN)	96-97	.....	14	9440033
421.	2-M14	2.559	BRACKET, ENG WRG HARN	96-97	F (LT1)	LH	12553341
422.	2-B22	1.428	STUD, OIL PAN (5/16-18X.66, 5/16-18X.49)	93	F (LT1)	1	14084059
	2-B22	1.428	STUD, OIL PAN (LH POS#4, 5;RH POS#4, 5) (14X20X.56-1/4X20X.50)	96-97	F (LT1)	4	14101092

cardiagn.com

	2-B22	1.428	STUD, OIL PAN (POS #1) (5/16 X 18 X 1 43/64)	96-97	F (LT1)	2	14080362
423.		8.900	BOLT, HEX .312-18X.750 300M PC (OIL PAN)	96-97	.....	1	9424877
424.		8.929	WASHER, FLAT 5/16X5/8X1/16 ZP HARD (OIL PAN)	96-97	.....	1	2436162
425.	2-N19	4.128	CLIP, TRANS FLUID CLR PIPE ...	96-97	F (M30)	1	10225624
426.		8.917	NUT, HEX-LK-3/8-16 301M CAD (CR/SHF OIL DFL)	96-97	.....	3	9422297
427.	2-B26	1.609	PIN, OIL PRESS RLF VLV SPR ST (ALSO PART OF 434)	96-97	F (LT1)	1	838839
428.	2-B28	1.723	BOLT, O/PMP CVR (ALSO PART OF 434) (HFH M6X1X20 9.8 PZOR) (8.900) (AC-DELCO #11508600)	96-97	F (LT1)	2	11508600
	2-B28	1.723	BOLT, O/PMP CVR (ALSO PART OF 434) (M6X1X20, 19THD, 14.2OD) (8.900) (AC-DELCO #11517518)	96-97	F (LT1)	2	11517518
429.	2-B26	1.609	VALVE, OIL PRESS RLF (ALSO PART OF 434)	96-97	F (LT1)	1	3702366
430.	2-B26	1.609	SPRING, OIL PRESS RLF VLV (ALSO PART OF 434)	96-97	F (LT1)	1	10044435
431.	2-B27	1.656	SCREEN, O/PMP	96-97	F (LT1)	1	12550042
432.	2-B26	1.609	PLUG, OIL PRESS RLF VLV BORE (ALSO PART OF 434) (NON-THD 7/16 DIA, 13/32 LGTH) (CHAM ENDS, STL)	96-97	F (LT1)	1	3704871
433.	2-B28	1.723	COVER, O/PMP (ALSO PART OF 434) (INCLS COVER, PLUGS, SPRING & VALVE)	96-97	F (LT1)	1	10168528
434.	2-B27	1.652	PUMP, OIL (.742 TUBE DIA) (INCL 427, 428, 429, 430, 432, 433) (INCLS BOLTS, COVERS, GEARS, HSGS, PIN, PLUG, SHFS, SPR & VLV)	96-97	F (LT1)	1	12555283
435.	2-B28	1.723	PIN, (1/4 X 5/8) (O/PMP LOC (ALSO PART OF PARTIAL ENGINE ASM.)) (8.939)	96-97	.....	2	12554553
436.	2-B26	1.639	RETAINER, O/PMP DRV S[illegible]	96-97	F (LT1)	1	3764554
437.	2-B26	1.639	SHAFT, O/PMP DRV	96-97	F (LT1)	1	3998287
438.		8.900	BOLT, HFH (1/4-20X.56 280M PZOR) (OIL LVL IND TUBE)	96-97	.....	1	9439930
439.	2-B23	1.516	TUBE, OIL LVL IND	96-97	F (LT1)	1	12551154
440.	2-B23	1.516	INDICATOR, OIL LVL	96-97	F (LT1)	1	12551144
441.		8.917	NUT, HFX, 1/4-20X.234, 284M, 69K, POR, 240 (TRANS OIL CLR PIPE CLIP)	96-97	.....	1	9439915

RPO DEFINITIONS
KC4 - COOLING SYSTEM,ENGINE OIL
LT1 - ENGINE-GAS, 8 CYL, 5.7L(5.7P),MFI,HO
M30 - TRANSMISSION,AUTOMATIC 4 SPEED,4L60E,ELECTRONIC

cardiagn.com

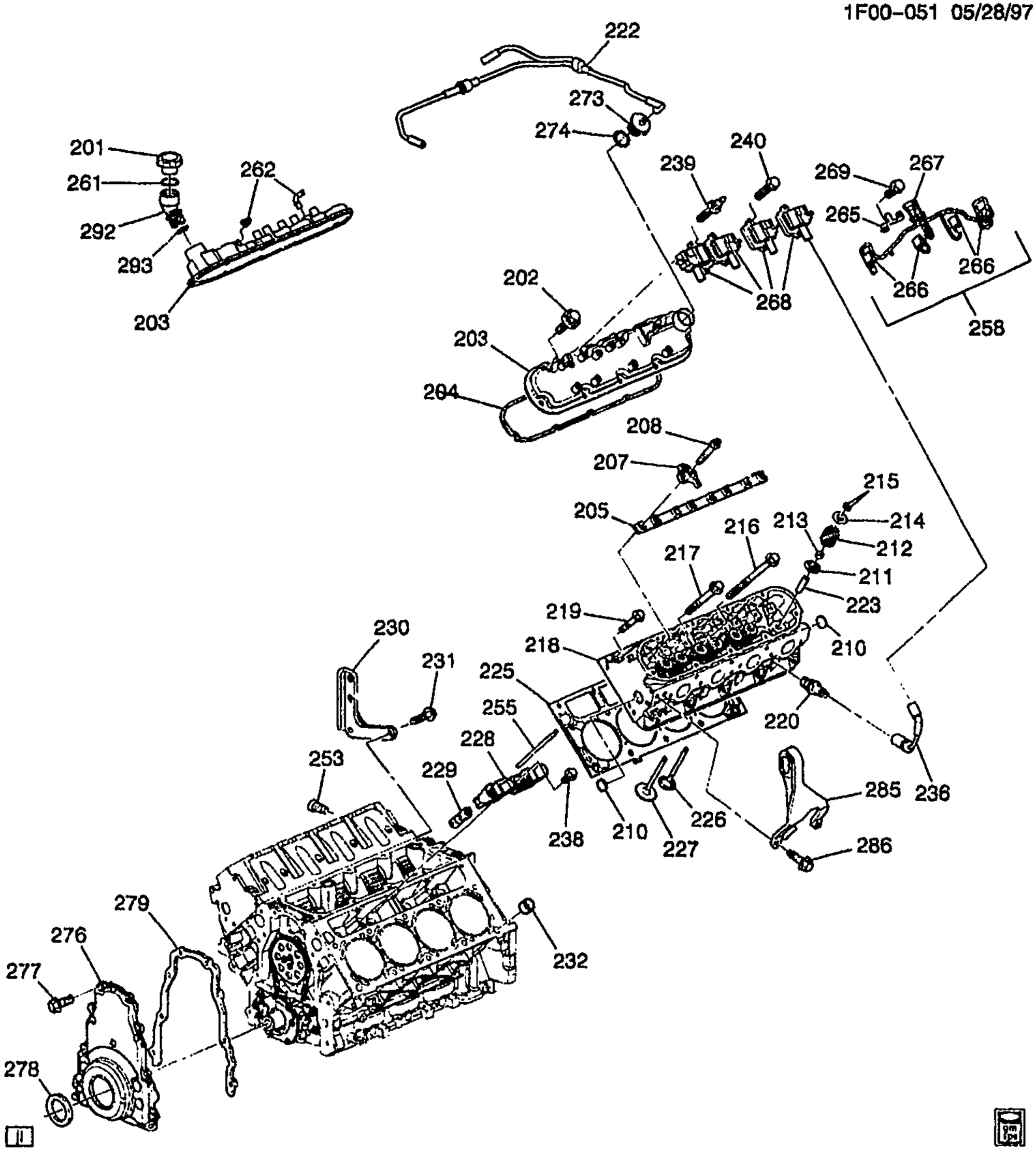

1F00--051

1998 F ENGINE ASM–5.7L V8 PART 2 CYLINDER HEAD AND RELATED PARTS (LS1/5.7G)

201.	2–C2	1.758	CAP, OIL FIL (W/SEAL) (INCLS 261) (SAE 10W–30) (AC–DELCO #FC176)	98 F (LS1)	1	24504599
202.	2–A14	0.413	BOLT, VLV RKR ARM CVR (SPECIAL; M6X1.0X33.5)	98 F (LS1)	20	12556430

cardiagn.com

203.	2–A13	0.386	COVER, VLV RKR ARM (INCLS ATTACH BOLTS)	98	F (LS1)	RH	12559603
	2–A13	0.386	COVER, VLV RKR ARM (INCLS ATTACH BOLTS)	98	F (LS1)	LH	12559604
204.	2–A14	0.423	GASKET, VLV RKR ARM CVR (*KIT1)	98	F (LS1)	2	12556429
205.	2–A14	0.429	SUPPORT, VLV RKR ARM PIV	98	F (LS1)	2	12552203
207.	2–A13	0.333	ARM, VLV RKR	98	F (LS1)	16	10214664
208.	2–A13	0.349	BOLT, VLV RKR ARM PIV SUPT	98	F (LS1)	16	12560961
210.	2–A12	0.293	PLUG, CYL HD CORE HOLE (CUP, 32.03X7.87X1.47, 1010, 6199–M)	98	F (LS1)	4	1647542
211.	2–A13	0.303	SHIM, VLV SPR	98	F (LS1)	16	12565118
212.	2–A13	0.303	SPRING, VLV	98	F (LS1)	16	12553696
213.	2–A13	0.308	SEAL KIT, EXH VLV STEM OIL (14.4MM) (INCLS (8) SEALS)	98	F (LS1)	1	12457652
	2–A13	0.308	SEAL KIT, INT VLV STEM OIL (INCLS (8) SEALS)	98	F (LS1)	1	12533598
214.	2–A13	0.309	CAP, VLV SPR	98	F (LS1)	16	10166344
215.	2–A13	0.310	KEY, VLV STEM	98	F (LS1)	32	10166345
216.	2–A12	0.293	BOLT, CYL HD (M11X2.0X155.0–6G THD) (W/ADHES PATCH)	98	F (LS1)	16	12560744
217.	2–A12	0.293	BOLT, CYL HD (M11X2.0X100.0–6G THD) (W/ADHES PATCH)	98	F (LS1)	4	12560745
218.	2–A11	0.269	HEAD, CYL	98	F (LS1)	2	12558807
219.	2–A12	0.293	BOLT, CYL HD (SHORT) (8X1.25X45)	98	F (LS1)	10	12558840
220.	2–L12	2.270	SPARK PLUG, (AC–DELCO #41–974)	98	F (LS1)	8	12563707
	2–L12	2.270	SPARK PLUG, (41–931) (AC–DELCO #41–931)	98	F (LS1)	8	25162555
	2–L12	2.270	SPARK PLUG, (AC–DELCO #12)	98	F (LS1)	8	25332827
222.	2–C3	1.762	PIPE, PCV VLV (VLV IN MIDDLE OF HARNESS)	98	F (LS1)	1	12560692
223.		N.S.	GUIDE, VLV (PART OF 218)				
225.	2–A12	0.289	GASKET, CYL HD (*KIT1)	98	F (LS1)	RH	12558809
	2–A12	0.288	GASKET, CYL HD (*KIT1)	98	F (LS1)	LH	12558810
226.	2–A13	0.297	VALVE, EXH (STD) (0.296)	98	F (LS1)	8	12550458
227.	2–A12	0.296	VALVE, INT (STD)	98	F (LS1)	8	12550457
228.	2–A14	0.439	GUIDE, VLV LFTR (ACCOMODATES 4 VLV LFTRS EACH)	98	F (LS1)	4	12551162
229.	2–A14	0.459	LIFTER, VLV (AC–DELCO #HL124)	98	F (LS1)	16	17122490
230.		N.S.	BRACKET, ENG LIFT RR			1	
231.	2–A9	0.004	BOLT, ENG LIFT BRKT (M10X1.5X35, 32THD, 10.9) (8.900)	98	F (LS1)	2	11515767
232.	2–A12	0.293	PIN, CYL HD LOC (1/2 X 5/8 O.D.)	98	F (LS1)	4	12558081
236.	2–L10	2.240	WIRE, SPLG (POS #1–#8) (STYLE 8DDD) (7.8" LONG) (2.239) (AC–DELCO #348S)	98	F (LS1)	8	12192064

cardiagn.com

238.	2-A14	0.459	BOLT, VLV LFTR GDE (HFH M6X1.0X19, 13 THD, 10.9, GM4435M, MACH, DOG PT & SHOULDER)	98	F (LS1)	4	12551163
239.	2-L9	2.183	STUD, IGN COIL (HFH, M6X1.0X40, SPECIAL HD)	98	F (LS1)	6	12557539
240.		8.917	BOLT, M6X1X20, 9.8, PZOR, 7114M, 14.2 FLG OD (IGN COIL) (8.900) (AC-DELCO #11516423)	98	....	7	11516423
253.	2-A12	0.293	PLUG, CYL HD CORE HOLE (THREADED)	98	F (LS1)	1	12553191
255.	2-A14	0.426	ROD, VLV PUSH	98	F (LS1)	16	10238852
258.	2-L10	2.240	WIRE, IGN COIL (INCLS 265, 266, 267, 269) (W/CLIP) (LH & RH BANKS) (PRIMARY)	98	F (LS1)	2	15301401
261.		N.S.	SEAL, O-RING FIL (PART OF ITEM #201		.....		
262.		N.S.	ELBOW, PCV (PART OF ITEM #203)		.....		
265.		N.S.	BRACKET, ENG WRG HARN CONN		.....		
266.	2-L9	2.170	CONNECTOR, COIL-IGN (4-WAY F) (W/LEADS, IN A ROW) (4.651) (AC-DELCO #PT368)	98	F (LS1)	4	12102741
267.	2-M8	2.530	CONNECTOR, INLINE-TO ENG HARN (7-WAY M, W/LEADS) (AC-DELCO #PT281)	98	F (LS1)	1	12102490
268.	2-L9	2.170	COIL, IGN (AC-DELCO #D580) .	98	F (LS1)	8	12558948
269.		8.900	BOLT/SCREW, HFH, M6X1X10, 9.8, PZOR, 7114M, 14.2, FLG OD (WRG HARN BRKT)	98	(LS1)	4	11516421
273.	2-C3	1.762	FITTING, PCV (INCLS 274)	98	F (LS1)	1	12557672
274.		N.S.	SEAL, PCV FITTING (PART OF 273		.....		
276.	2-A11	0.206	COVER, ENG FRT (INCLS CVR, SEAL, GSKT, BOLT)	98	F (LS1)	1	12561243
277.	2-A10	0.137	BOLT, CR/SHF RR OIL SEAL HSG (HFH M8X1.25X30, 23.85 THD, 10.9, PZ GM7114M, MACH) (8.900)	98	F (LS1)	12	12551187
278.	2-A11	0.213	SEAL, CR/SHF FRT OIL	98	F (LS1)	1	12561244
279.	2-A11	0.207	GASKET, ENG FRT CVR	98	F (LS1)	1	12558013
285.		N.S.	BRACKET, ENG LIFT FRT		.....		
286.	2-A9	0.004	BOLT, ENG LIFT BRKT (M10X1.5X35, 32THD, 10.9) (8.900)	98	F (LS1)	2	11515767
292.	2-B28	1.745	TUBE, OIL FIL (INCLS 293)	98	F (LS1)	1	12559505
293.		N.S.	SEAL, O-RING FIL (PART OF ITEM #292		.....		

cardiagn.com

SERVICE KITS

1.	2-A12	0.289	GASKET KIT, CYL HD (INCL 204. 225) (KIT INCLUDES: GASKETS FOR CYLINDER HEAD, INTAKE AND EXHAUST MANIFOLD, VALVE COVERS AND SEAL, ENG COOL AIR BL PIPE (O-RING) ...	98	F (LS1)	1	12369018

RPO DEFINITIONS

LS1 – ENGINE GAS, 8 CYL, 5.7L, SFI, ALUMINUM ENGINE

cardiagn.com

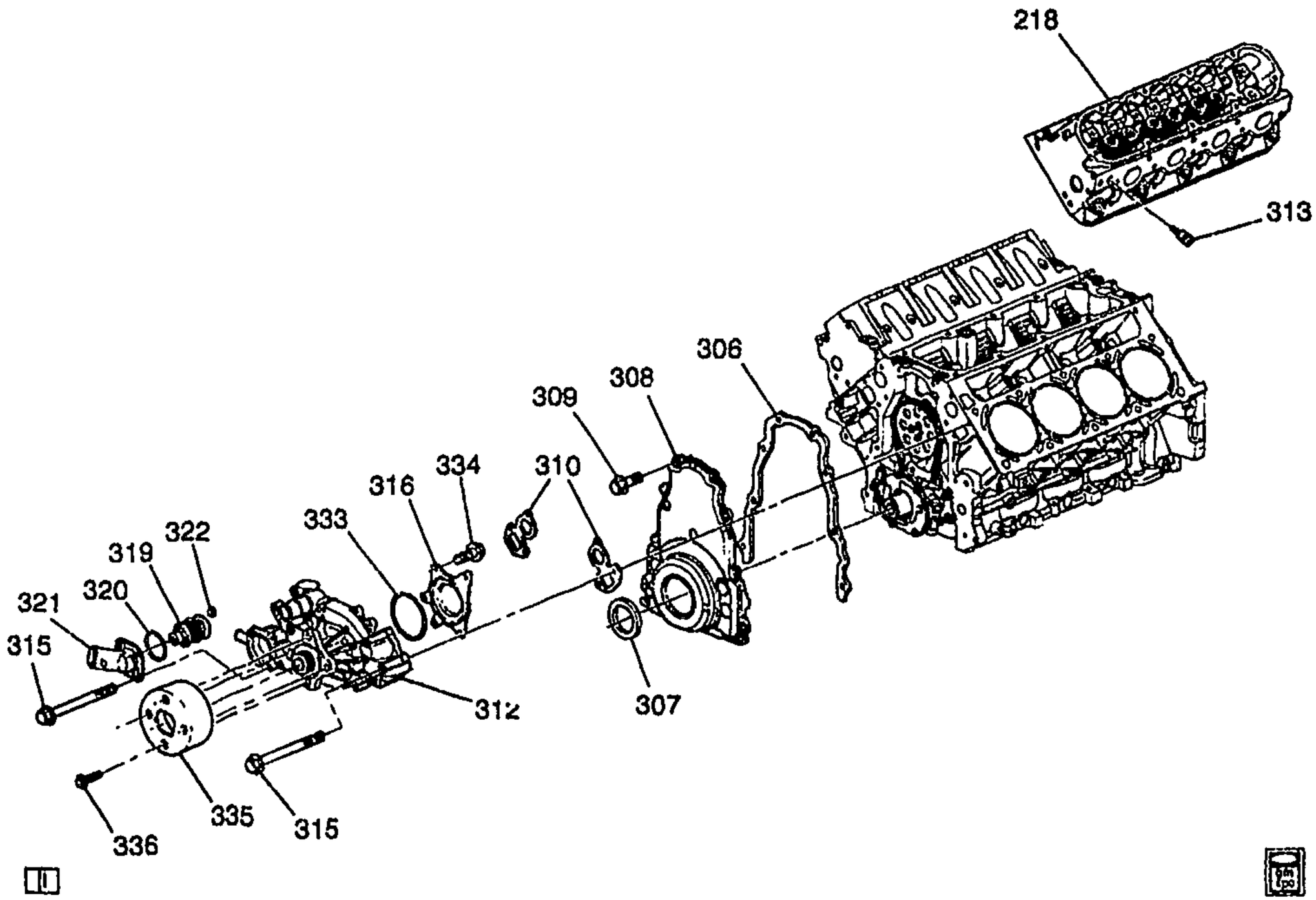

1Y00-052F

1998 F ENGINE ASM-5.7L V8 PART 3 FRONT COVER & COOLING (LS1/5.7G)

218.	2-A11	0.269	HEAD, CYL	98 F (LS1)	2	12558807
306.	2-A11	0.207	GASKET, ENG FRT CVR	98 F (LS1)	1	12558013
307.	2-A11	0.213	SEAL, CR/SHF FRT OIL (ALSO PART OF 308)	98 F (LS1)	1	12561244
308.	2-A11	0.206	COVER, ENG FRT (INCL 304, 307) (INCLS CVR, SEAL, GSKT, BOLT)	98 F (LS1)	1	12561243
309.	2-A11	0.206	BOLT, ENG FRT CVR (HFH M8X1.25X30, 23.85 THD, 10.9, PZ GM7114M, MACH) (8.900)	98 F (LS1)	8	12551187
310.	2-B12	1.079	GASKET, W/PMP (ALSO PART OF 312)	98 F (LS1)	2	12559648
312.	2-B12	1.069	PUMP, WAT (INCLS 310, 316)	98		
313.	2-N8	3.682	SENSOR, ENG COOL TEMP (W/ENG COOL T/GA SEN)	98 F (LS1)	1	12551708
	2-B14	1.150	CONNECTOR, SEN-ENG COOL TEMP (BLACK) (3-WAY F) (W/LEADS) (2.535) (AC-DELCO #PT375)	98 F (LS1)	1	12102748
315.	2-B12	1.079	BOLT, W/PMP (USED W/SEALANT) (M8X1.25X82.6, 31.8 THD, 17 OD, 10.9, GM7114M	98 F (LS1)	6	12551926

cardiagn.com

316.		N.S.	COVER, W/PMP (BACKPLATE) (PART OF 312)	98	F (LS1)	1	12557710
319.		N.S.	THERMOSTAT, ENG COOL (INCL 312, 321)				
320.	2-B13	1.123	SEAL, W/PMP (ALSO PART OF #319)	98	F (LS1)	1	12561155
321.	2-B12	1.073	INLET, W/PMP (INCLS 319, 322) (INCLS INLET, THERMOSTAT, SEAL, VALVE, RET)	98	F (LS1)	1	12562740
322.		N.S.	VALVE, ENG COOL AIR BL (PART OF 321)				
333.	2-B13	1.123	SEAL, W/PMP CVR (O RING) (ALSO PART OF 312)	98	F (LS1)	1	12551905
334.		N.S.	BOLT, W/PMP CVR (PART OF 312) (M6X1X25)				
335.	2-B11	1.062	PULLEY, W/PMP	98	F (LS1)	1	12552059
336.	2-B11	1.062	BOLT, W/PMP PUL (M8X1.25X20) (8.900)	98	F (LS1)	4	11515756

RPO DEFINITIONS
LS1 – ENGINE GAS, 8 CYL, 5.7L, SFI, ALUMINUM ENGINE

cardiagn.com

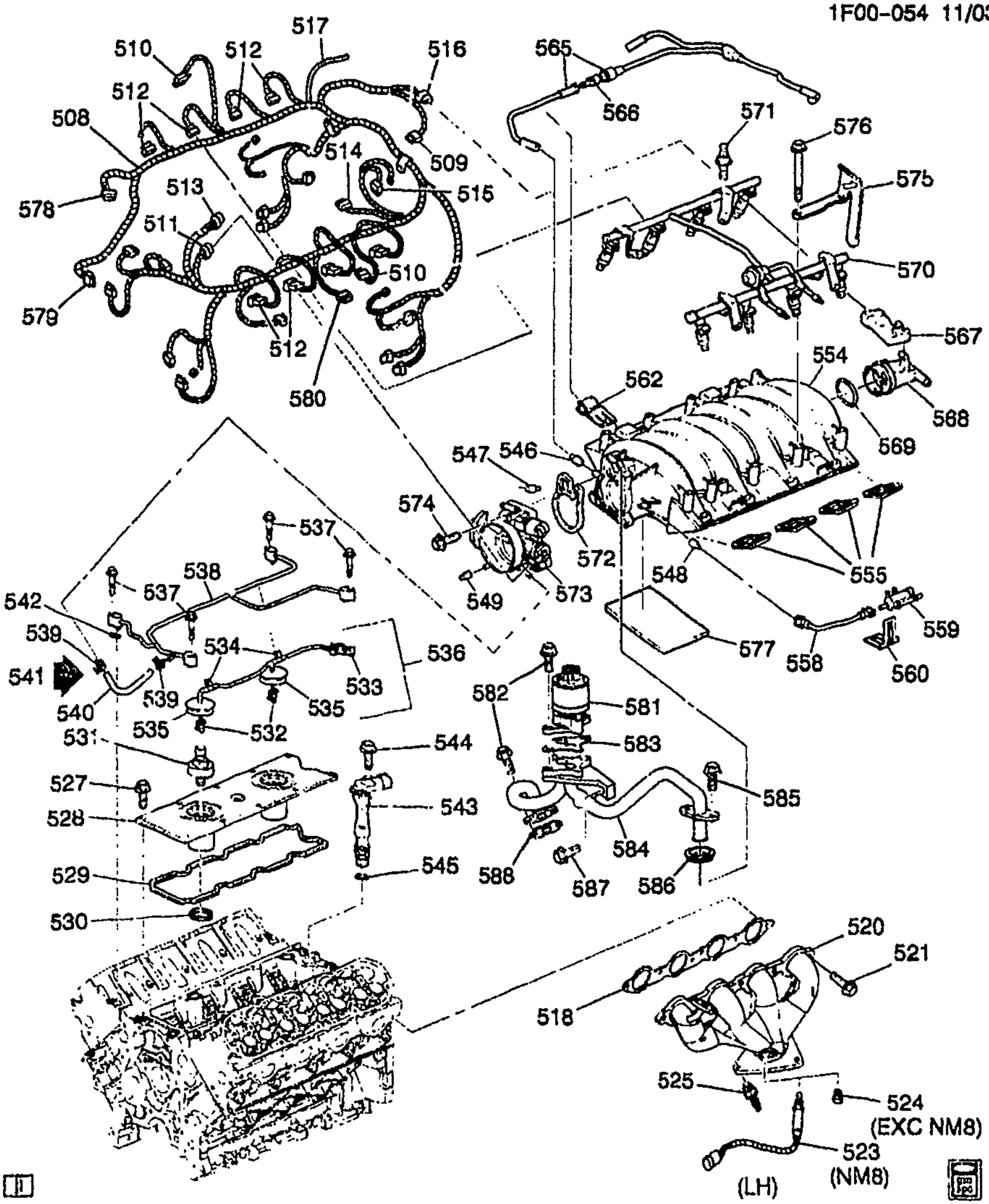

1998 F ENGINE ASM–5.7L V8 PART 5 MANIFOLDS AND FUEL RELATED PARTS (LS1/5.7G)

508.	2–M5	2.525	HARNESS, ENG WRG	98 F (LS1, M30, C60)	1	12177560
	2–M6	2.525	HARNESS, ENG WRG	98 F (LS1, MM6, C60)	1	12177561
509.	2–L14	2.383	CONNECTOR, SEN–CM/SHF POSN (TO CALLOUT 543) (BLACK) (3–WAY F) (W/LEADS)	98 F (LS1)	1	12085495

cardiagn.com

510.	2-L14	2.383	**CONNECTOR**, MDL-ELEK IGN CONT (7-WAY F, W/LEADS) (8.965) (AC-DELCO #PT381) ...	98	F (LS1)	2	12102754
511.	2-M23	3.339	**CONNECTOR**, SEN-THROT POSN (BLACK) (3-WAY F) (W/LEADS) (2.535) (AC-DELCO #PT375)	98	F (LS1)	1	12102748
512.	2-M4	2.483	**CONNECTOR**, INJR-FUEL (2-WAY F) (W/LEADS) (2.535) (AC-DELCO #PT113)	98	F (LS1)	8	12035491
513.	2-M23	3.338	**CONNECTOR**, MOT-IDLE AIR C/VLV (4-WAY F) (W/LEADS) (2.383) (AC-DELCO #PT757) ...	98	F (LS1)	1	12126437
514.	2-M8	2.530	**CONNECTOR**, INLINE-TO KNOCK SEN (BLACK) (2-WAY F W/LEADS) (3.670) (AC-DELCO #PT374)	98	F (LS1)	2	12102747
515.	2-B23	1.516	**CONNECTOR**, SEN-ENG OIL LVL (BLACK) (2-WAY F W/LEADS) (3.670) (AC-DELCO #PT374)	98	F (LS1)	2	12102747
516.	2-N8	3.682	**CONNECTOR**, SEN-MAP (GRAY) (3-WAY F)	98	F (LS1)	1	12129946
517.	2-N5	3.675	**HOSE**, MAP SEN VAC	98	F (LS1)	1	12186680
518.	2-M19	3.270	**GASKET**, EXH MANIF (*KIT1)	98	F (LS1)	2	12558573
520.	2-M24	3.601	**MANIFOLD**, EXH (INCLS 525) ..	98	F (LS1, M30, MM6)	RH	12560193
	2-M24	3.601	**MANIFOLD**, EXH (INCLS 525) ..	98	F (LS1, M30, MM6)	LH	12560194
521.		8.900	**BOLT**, HWH, M8X1.25X32, 22.9 THD, 9.8, PS (EXH MANIF)	98	F (LS1)	8	12551187
523.	2-N8	3.682	**SENSOR**, HTD OXY (POSN 1) (EXC NM8) (USE WITH CONNECTOR 580) (AC-DELCO #AFS97)	98	F (LS1)	1	25312196
	2-N8	3.682	**CONNECTOR**, INLINE-TO OXY SEN (4-WAY M) (W/LEADS) (2.530) (AC-DELCO #PT919) ...	98	F (LS1)	1	15305801
524.		6.971	**PLUG-EXT**, M18X1.5X10 TAPPERED 1:16, 19 OD, 22 OAL, SAE 1010/1012 (OXY SEN HOLE)	98	F (LS1)	1	25509274
525.		N.S.	**STUD**, EXH PIPE (PART OF 520) .		.....		
527.		8.900	**BOLT**, HWH, M8X1.25X32, 22.9 THD, 9.8, PS (PART OF 528)	98	F (LS1)	10	12551187
528.	2-M19	3.265	**COVER**, ENG BLK VALLEY (INCLS 527, 529, 530)	98	F (LS1)	1	12561106
529.	2-M19	3.270	**GASKET**, ENG BLK VALLEY CVR (PART OF 528)	98	F (LS1)	1	12558178
530.	2-L14	2.383	**GROMMET**, KNOCK SEN (PART OF 528)	98	F (LS1)	2	12558177
531.	2-L14	2.383	**SENSOR**, KNOCK (W/LOCATING TAB; 2ND DES SEE 10456603) (AC-DELCO #213-298)	98	F (LS1) (1ST DES)	1	10456222
	2-L14	2.383	**SENSOR**, KNOCK (W/O LOCATING TAB; 1ST DES SEE 10456222) (AC-DELCO #213-362)	98	F (LS1) (2ND DES)	2	10456603

cardiagn.com

532.	2-L14	2.383	CONNECTOR, SEN-KNOCK (PART OF 536) (1-WAY M, W/LEADS, HIGH TEMP) (1.150) (AC-DELCO #PT727)	98	F (LS1)	2	12126456
533.	2-M8	2.530	CONNECTOR, INLINE-TO ENG HARN (PART OF 536) (BLACK) (2-WAY M) (W/LEADS) (4.720) (AC-DELCO #PT786)	98	F (LS1)	1	12167120
534		N.S.	CLIP, HARNESS KNOCK SENSOR JUMPER (PART OF 536	98	F (LS1)	2	
535.		N.S.	GROMMET, KNOCK SENSOR (PART OF 536	98	F (LS1)	2	
536.	2-L17	2.480	WIRE, KNOCK SEN (USE W/KNOCK SENSOR STAMPED 10456222 & W/INDEX TAB ON CONNECTOR TO SENSOR) (INCLS 532, 533, 534, 535) (FOR 2ND DES SEE 15320925)	98	F (LS1) (1ST DES)	1	15320549
	2-L17	2.480	WIRE, KNOCK SEN (USE W/KNOCK SENSOR STAMPED 10456603 & CONNECTOR W/O INDEX TAB) (INCLS 532, 533, 534, 535) (FOR 1ST DES SEE 15320549)	98	F (LS1) (2ND DES)	1	15320925
537.	2-B13	1.097	BOLT, ENG COOL AIR BL PIPE (M6X1.0X30) (8.900)	98	F (LS1)	4	11514008
538.	2-B13	1.097	PIPE, ENG COOL AIR BL (INCLS 539, 541, 542)	98	F (LS1)	1	12562159
539.		8.948	CLAMP, SPRG BAND, 14.2MM, 9/16 OD HOSE, POR (ENG COOL AIR BL) (LPART OF 538)	98	.....	2	25526358
540.	2-B13	1.097	HOSE, ENG COOL AIR BL (PART OF 538)	98	F (LS1)	1	12562165
541.		8.800	LUBRICANT, RUBBER 6 GAL (LUBRICANT, ENG COOL AIR BL HOSE)	98	F (LS1)	AR	12345884
542.	2-B13	1.097	SEAL, ENG COOL AIR BL PIPE (O RING) (PART OF 538)	98	F (LS1)	4	12551933
543.	2-L14	2.383	SENSOR, CM/SHF POSN (INCL 545) (USE WITH 509 CONNECTOR) (AC-DELCO #213-355)	98	F (LS1)	1	12560229
544.	2-L14	2.383	BOLT, CR/SHF POSN SEN (M8X1.25X20) (8.900)	98	F (LS1)	1	11515756
545.		N.S.	SEAL, CM/SHF POSN SEN HOLE PLUG (O RING) (PART OF 543) ..	98	F (LS1)	1	
546.		N.S.	CONNECTOR, PCV CR/CASE VENT (PART OF 554		F (LS1)	1	
547.		N.S.	CONNECTOR, PCV FRESH AIR TO CR/CASE (PART OF 573		F (LS1)	1	
548.		N.S.	CONNECTOR, PURGE PORT (PART OF 554		F (LS1)	1	
549.		N.S.	CONNECTOR, VAPOR VENT TUBE (PART OF 573		F (LS1)	1	

cardiagn.com

554.	2-M19	3.265	**MANIFOLD**, INT (SERV) (SEE GROUP 3.000 "FUEL RAIL, INTAKE MANIFOLD, THROTTLE BODY "FOR DETAIL ILLUSTRATED VIEW.) (INCLS 546, 548, 568, 569)	98	F (LS1)	1	12561269
555.	2-M19	3.270	**GASKET KIT**, INT MANIF (CONTAINS 8 GASKETS)	98	F (LS1)	1	12533587
558.	2-M17	3.145	**TUBE** EVAP EMIS CNSTR PURGE (FROM VALVE TO THROTTLE BODY)	98	F (LS1)	1	12552222
559.	2-M16	3.130	**VALVE**, EVAP EMIS CNSTR PURGE SOL (AC-DELCO #214-641)	98	F (LS1)	1	1997278
560.	2-M16	3.130	**BRACKET**, EVAP EMIS CNSTR PURGE SOL VLV	98	F (LS1)	1	12560884
562.	2-C3	1.762	**RETAINER**, PCV VLV PIPE	98	F (LS1)	2	12557340
565.	2-C3	1.762	**PIPE**, PCV VLV (VLV IN MIDDLE OF HARNESS) (INCLS 566)	98	F (LS1)	1	12560692
566.		N.S.	**VALVE**, PCV (PART OF 565)		.....		
567.	2-N8	3.632	**SENSOR**, MAP (W/SEAL) (AC-DELCO #213-331)	98	F (LS1)	1	16212460
	2-N8	3.682	**CONNECTOR**, SEN-MAP (GRAY) (3-WAY F)	98	F (LS1)	1	12129946
568.		N.S.	**PLUG**, MAP SEN HOLE (PART OF 554)		.....		
569.		N.S.	**SEAL**, MAP SEN HOLE PLUG (O RING) (PART OF 554)		.....		
570.	2-M21	3.330	**RAIL**, SEQ M/PORT F/INJN FUEL (SEE GROUP 3.000 "RAIL" FOR DETAIL ILLUSTRATED VIEW.) (AC-DELCO #217-1401)	98	F (LS1)	1	12562815
571.	2-M21	3.330	**STUD**, F/INJN FUEL RL (HFH 6X1X18.5X14 W/ADH, 6X1X14. 39.1 OAL, 14.2 OD, 9.8, 7114M) (AC-DELCO #12554211)	98	F (LS1)	4	12554211
572.	2-M22	3.336	**SEAL**, THROT BODY	98	F (LS1)	1	12552542
573.	2-M21	3.335	**BODY**, THROT (SEE GROUP 3.000 "BODY, THROT"FOR DETAIL ILLUSTRATED VIEW. (INCLS 547, 549) (AC-DELCO #17113390)	98	F (LS1)	1	17113390
	2-M23	3.338	**CONNECTOR**, MOT-IDLE AIR C/VLV (4-WAY F) (W/LEADS) (2.383) (AC-DELCO #PT757) ...	98	F (LS1)	1	12126487
	2-M23	3.339	**CONNECTOR**, SEN-THROT POSN (BLACK) (3-WAY F) (W/LEADS) (2.535) (AC-DELCO #PT375)	98	F (LS1)	1	12102748
574.	2-M22	3.336	**BOLT**, THROT BODY (M6X1.0X30) (8.900)	98	F (LS1)	3	11514008
575.	2-M21	3.330	**BRACKET**, F/INJN FUEL RL	98	F (LS1)	LH	12556074
576.	2-M19	3.275	**BOLT**, INT MANIF (W/FLAT WASHER) (M6X1.0X21.8, 13.6 OD, GM500M, ZF, MACH, ADHES)	98	F (LS1)	10	12552344
577.	2-M19	3.270	**SEAL**, INT MANIF	98	F (LS1)	2	12560251

cardiagn.com

578.	2-M26	3.670	CONNECTOR, SOL-EGR VLV (5-WAY F) (W/LEADS) (AC-DELCO #PT747)	98	F (LS1)	1	12126477
579.	2-N28	9.186	CONNECTOR, COIL-A/C CLU (OVAL) (2-WAY F) (W/LEADS) (2.535) (AC-DELCO #PT209) ...	98	F	AR	12101937
	2-N28	9.186	CONNECTOR, COIL-A/C CLU (OVAL) (2-WAY F) (W/LEADS) (2.535) (AC-DELCO #PT209) ...	98	F (LS1)	1	12101937
580.	2-N8	3.682	CONNECTOR, INLINE-TO OXY SEN (TO CALLOUT 523) (2-WAY) (W/O LEADS) (2.559) ..	98	F (LS1, NM8)	4	12191286
	2-N8	3.682	CONNECTOR, INLINE-TO OXY SEN (TO CALLOUT 523) (4-WAY M) (W/LEADS) (2.530) (AC-DELCO #PT919)	98	F (LS1)	4	15305801
581.	2-M26	3.670	VALVE, EGR (AC-DELCO #214-5597)	98	F (LS1)	1	17113589
582.	2-N5	3.675	BOLT, EGR VLV PIPE (M8X1.25X24.4) (20 THD) (0.056)	98	F (LS1)	4	12556127
583.	2-N8	3.680	GASKET, EGR VLV (AC-DELCO #219-230)	98	F (LS1)	1	12558353
584.	2-N5	3.675	PIPE, EGR VLV	98	F (LS1)	1	12556643
585.	2-N5	3.675	BOLT, EGR VLV PIPE (M8X1.25X24.4) (20 THD) (0.056)	98	F (LS1)	4	12556127
586.	2-N8	3.680	SEAL, EGR VLV PIPE (O RING) (AC-DELCO #219-235)	98	F (LS1)	1	12557932
587.		8.900	BOLT, EGR VAC REG VLV BRKT (HEX FLG HD) (M10X1.5X30)	98	F (LS1)	2	11510328
588.	2-N8	3.680	GASKET, EGR VLV PIPE (AC-DELCO #219-229)	98	F (LS1)	1	12553047

SERVICE KITS

1.	2-A12	0.289	GASKET KIT, CYL HD (INCLS KIT CONTAINS: GASKETS FOR CYLINDER HEAD, INTAKE AND EXHAUST MANIFOLDS, SEAL-ENG COOL AIR BL PIPE (0-RING)	98	F (LS1)	1	12369018

RPO DEFINITIONS

C60 – AIR CONDITIONER,FRONT,MANUAL CONTROLS
LS1 – ENGINE GAS, 8 CYL, 5.7L, SFI, ALUMINUM ENGINE
MM6 – TRANSMISSION MAN 6 SPD, BORG WARNER, 35MM, 1ST 2.66, 6TH 0.50, O/D
M30 – TRANSMISSION,AUTOMATIC 4 SPEED,4L60E,ELECTRONIC
NM8 – EMISSION SYSTEM,LEADED FUEL(EXPORT)

cardiagn.com

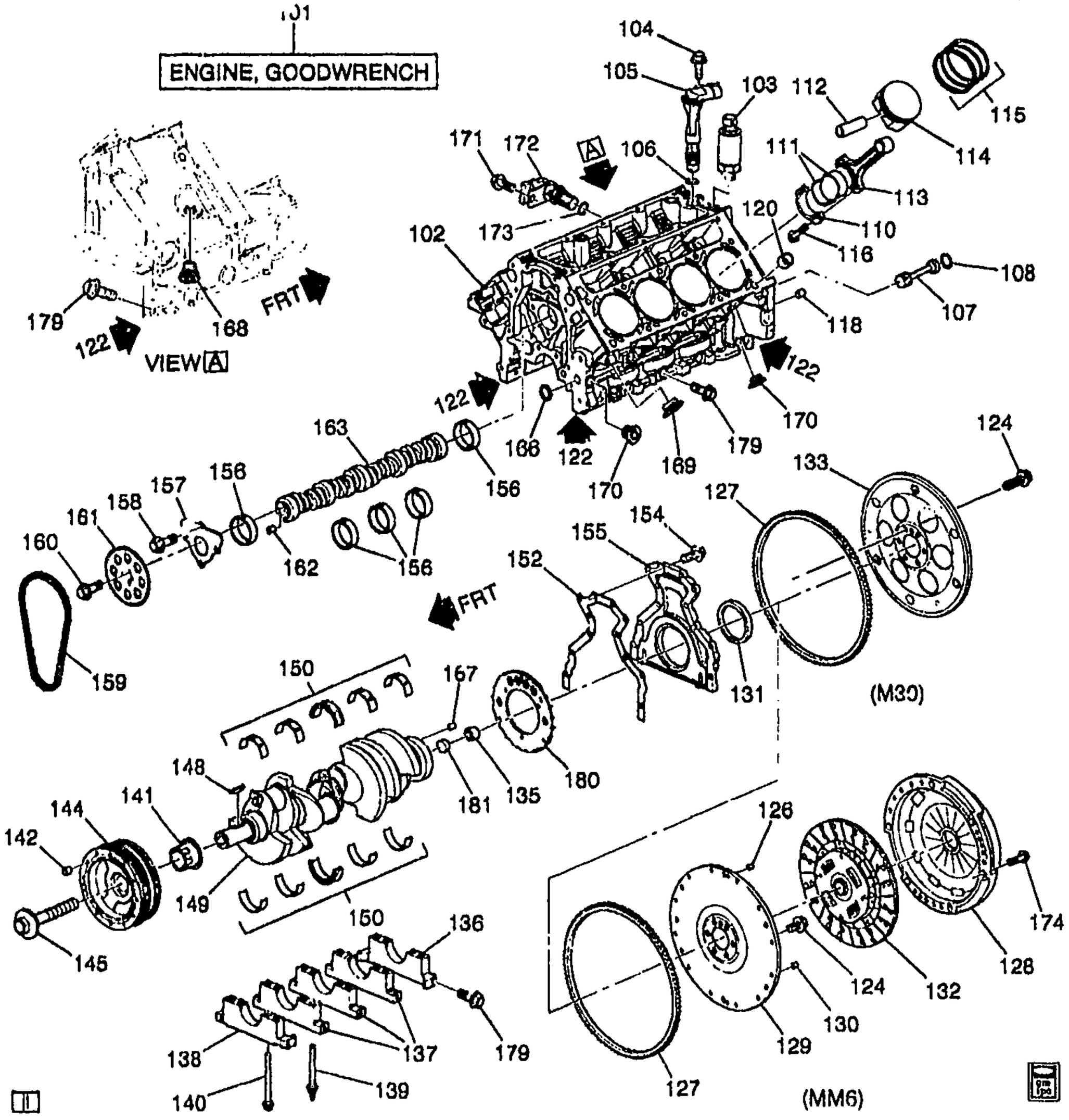

1F00–050

1998–2002 F ENGINE ASM–5.7L V8 PART 1 CYLINDER BLOCK AND RELATED PARTS (LS1/5.7G)

101.	2–L6	0.000 A	ENGINE, GASOLINE (GOODWRENCH) (INCL 102, 107, 110, 111, 112, 113, 114, 115, 116, 118, 120, 131, 135, 136, 137, 138, 139, 140, 149, 150, 152, 154, 155, 156)	02 F (LS1)	1	88894255

cardiagn.com

	2-A7	0.000 A	ENGINE, GASOLINE (GOODWRENCH) (CONSISTS OF:ENG BLOCK, CYL HEADS, CRANKSHAFT, HARM BAL, PISTON AND ROD ASM'S, OIL PAN, OIL PUMP, FRONT COVER, WTR PMP, CAMSHAFT W/VALVETRAIN, ROCKER COVERS) (INCL 102, 107, 110, 111, 112, 113, 114, 115, 116, 118, 120, 131, 135, 136, 137, 138, 139, 140, 149, 150, 152, 154, 155, 156)	00	F (LS1)	1	88893287
	2-A7	0.000 A	ENGINE, GASOLINE (GOODWRENCH) (NEW) (REFER TO NOTE #7, 7A IN CATLG TEXT) (INCL 102, 107, 110, 111, 112, 113, 114, 115, 116, 118, 120, 131, 135, 136, 137, 138, 139, 140, 149, 150, 152, 154, 155, 156)	99	F (LS1)	1	12457659
	2-A7	0.000 A	ENGINE, GASOLINE (GOODWRENCH) (NEW) (REFER TO NOTE #6 IN CATALOG TEXT) (2001 APPLICATIONS MAY REQUIREROCKER ARM COVERS TO BE TRANSFERRED FROM ORIGINAL ENGINE) (INCL 102, 107, 110, 111, 112, 113, 114, 115, 116, 118, 120, 131, 135, 136, 137, 138, 139, 140, 149, 150, 152, 154, 155, 156)	01	F (LS1)	1	88894058
	2-A7	0.000 A	ENGINE, GASOLINE (GOODWRENCH) (REFER TO NOTES #7, #7A IN CATLG TEXT (NEW)) (INCL 102, 107, 110, 111, 112 113, 114, 115, 116, 118, 120, 131, 135, 136, 137, 138, 139, 140, 149, 150, 152, 154, 155, 156)	98	F (LS1)	1	88894086
102.		N.S.	BLOCK, ENG		.....		
103.	2-C3	1.800	SENSOR, ENG OIL PRESS GA (AC-DELCO #D1812A)	98	F (LS1)	1	12559781
	2-C3	1.800	SENSOR, ENG OIL PRESS GA (AC-DELCO #D1818A)	99-02	F (LS1)	1	12562267
	2-C3	1.800	CONNECTOR, SW-ENG OIL PRESS IND (BLACK) (1-WAY F) (W/LEADS) (2.535) (AC-DELCO #PT100)	98-02	F (LS1)	1	12085500
	2-C3	1.800	CONNECTOR, SW-ENG OIL PRESS IND (2-WAY F, W/LEADS) (4.874) (AC-DELCO #PT707)	98	F (LS1)	1	12126436
104.		8.900	BOLT, HFH, M8X1.25X20, 17THD, 18OD (CM/SHF POSN SEN)	98-02	.....	1	11515756
105.	2-L14	2.383	SENSOR, CM/SHF POSN (INCLS #106) (AC-DELCO #213-355) .	98	F (LS1)	1	12560229
	2-L14	2.383	SENSOR, CM/SHF POSN (INCLS #106) (AC-DELCO #213-363) .	99-02	F (LS1)	1	12561211

cardiagn.com

	2–L14	2.383	CONNECTOR, SEN–CM/SHF POSN (BLACK) (3–WAY F) (W/LEADS) (2.535) (AC–DELCO #PT117)	98–02	F (LS1)	1	12085495
106.		N.S.	SEAL, CM/SHF SENSOR O'RING (PART OF ITEM #105				
107	2–B25	1.531	PLUG, ENG BLK OIL GAL	98–01	F (LS1)	1	12558340
	2–B25	1.531	PLUG, ENG BLK OIL GAL	02	F (LS1)	1	12558340
108.		N.S.	SEAL, ENG BLK OIL GAL PLUG (O RING) (PART OF ITEM #107)			1	
110.		N.S.	CAP, CONN ROD (PART OF 113)				
111.	2–A15	0.616	BEARING KIT, CONN ROD (STD)	98–00	F (LS1)	8	12523924
	2–A15	0.616	BEARING KIT, CONN ROD	01–02	F (LS1)	8	12493712
112.		N.S.	PIN, PSTN (PART OF 114)				
113.	2–A15	0.603	ROD, CONN (INCLS 110, 116)	98–02	F (LS1)	8	12568734
114.	2–A15	0.629	PISTON, (W/PIN) (INCL 112) (STD)	98–02	F (LS1)	8	12456108
	2–A15	0.629	PISTON, (W/PIN) (INCL 112) (0.250MM O.S.)	98–02	F (LS1)	8	12456109
	2–A15	0.629	PISTON, (W/PIN) (INCL 112) (STD)	01–02	F (LS1)	8	88894011
115.	2–A16	0.643	RING KIT, PSTN (.250MM O.S.)	98–02	F (LS1)	8	12453325
	2–A16	0.643	RING KIT, PSTN (STD)	98–02	F (LS1)	8	12503556
116.	2–A15	0.623	BOLT, CONN ROD (ALSO PART OF 113) (M9X1X40.5, 15THD, 8135) (STELCO (NO COLLAR ON SHAFT) ;TORQUE 20 N–M & 65 DEGREES)	98	F (LS1)	16	10239136
	2–A15	0.623	BOLT, CONN ROD (ALSO PART OF 113) (M9X1X43) (HOLLINGSWORTH) (FERRULE ON NECK)	98–02	F (LS1)	16	12568069
118.	2–A18	0.685	PIN, TRANS LOC (5/8 DIA, 1 3/16 LG) (8.939)	98–02	F (LS1)	2	12338119
120.	2–A12	0.293	PIN, CYL HD LOC (1/2 X 5/8 O.D.)	98–00	F (LS1)	4	12558081
	2–A12	0.293	PIN, CYL HD LOC	01–02	F (LS1)	4	12570326
122.		8.800	SEALANT, PIPE W/TEFLON (HEAVY BODY) (AT FOUR CORNER)	98–02	F (LS1)	AR	12378190
124.	2–A17	0.669	BOLT, FLYWHL (HFH, M11X1.5X23.5, 21 THD, 22 O.D., 10.9, GM7114M, MACH, W/SEALANT)	98–01	F (LS1)	6	12553332
	2–A17	0.669	BOLT, FLYWHL (HFH, M11X1.5X23.5, 21 THD, 22 O.D., 10.9, GM7114M, MACH, W/SEALANT)	02	F (LS1)	6	12553332
126.	2–A17	0.669	PIN, FLYWHL LOC (PART OF 129) (M6X20) (8.939)	98–01	F (LS1)	2	11505820
	2–A17	0.669	PIN, FLYWHL LOC (PART OF 129) (M6X20) (8.939)	02	F (LS1)	2	11505820
127.	2–A18	0.673	GEAR, STRTR DRVN RING (PART OF #129 OR #133)	98	F (LS1)	1	460583
	2–A18	0.673	GEAR, STRTR DRVN RING (PART OF #129 OR #133)	99	F (LS1, M30)	1	460583
	2–A18	0.673	GEAR, STRTR DRVN RING (PART OF #129 OR #133)	00	F (LS1, M30, MM6)	1	460583

cardiagn.com

	2–A18	0.673	GEAR, STRTR DRVN RING (PART OF #129 OR #133)	01	F (LS1, M30)	1	460583
	2–A18	0.673	GEAR, STRTR DRVN RING (PART OF #129 OR #133)	02	F (LS1, M30)	1	460583
128.		N.S.	PLATE, CLU PRESS (W/CVR & CLU REL BRG) (PART OF 129) ...		.....		
129.	2–A16	0.666	FLYWHEEL, (W/CLU PRESS PLT) (MANUAL TRANS) (INCLS 126, 127, 128, 129, 130, 132)	98–00	F (LS1, MM6)	1	12562765
	2–A16	0.666	FLYWHEEL, (W/CLU PRESS PLT) (MANUAL TRANS) (INCLS 126, 127, 128, 129, 130, 132)	01	F (LS1, MM6)	1	12570281
	2–A16	0.666	FLYWHEEL, (W/CLU PRESS PLT) (MANUAL TRANS) (INCLS 126, 127, 128, 129, 130, 132)	02	F (LS1, MM6)	1	12570281
130.		N.S.	WEIGHT, FLYWHL (MANUAL TRANS) (PART OF 129)		.....		
131.	2–A10	0.137	SEAL, CR/SHF RR OIL (ALSO PART OF 137)	98–02	F (LS1)	1	12550574
132.	2–A22	0.886	PLATE, CLU DRVN (PART OF 129)	98–00	F (LS1, MM6)	1	12562611
	2–A22	0.886	PLATE, CLU DRVN (PART OF 129)	01–02	F (LS1, MM6)	1	12570280
133.	2–A16	0.666	FLYWHEEL, ENG (AUTO TRANSMISSION) (INCL #127) (GM)	98–02	F (LS1, M30)	1	12553054
135.	2–A16	0.649	BEARING, CLU PILOT	98–02	F (LS1, MM6)	1	14061685
136.		N.S.	CAP, CR/SHF BRG (POS#5 (REAR)		.....		
137.		N.S.	CAP, CR/SHF BRG (POS #2, 3, 4 – (INTERMEDIATE))		.....		12557548
138.		N.S.	CAP, CR/SHF BRG (POS #1 (FRONT)		.....		
139.	2–A9	0.056	STUD, CR/SHF BRG CAP (M10X2X23 / M8X1.25X10.9, MICRO ZINC PHOSPHATE)	98–02	F (LS1)	10	12560273
140.	2–A9	0.056	BOLT, CR/SHF BRG CAP (M10X2X102.5, 24.5 THD)	98–01	F (LS1)	10	12560272
	2–A9	0.056	BOLT, CR/SHF BRG CAP (M10X2X102.5, 24.5 THD)	02	F (LS1)	10	12560272
141.	2–A19	0.728	SPROCKET, CR/SHF	98–02	F (LS1)	1	12556582
142.	2–A17	0.669	WEIGHT, CR/SHF BALR (CR/SHF BAL) (WEIGHT–BARREL SHAPED PIN, .50" GROOVE–F) (PART OF 144) (2380/.2500 X .50) (BARREL–SHAPED PIN) (GROOVE–F)	98–99	F (LS1)	AR	3890192
		0.669	WEIGHT, CR/SHF BALR (CR/SHF BAL) (WEIGHT) (PART OF 144) (/F/.312 X .375 CZ (.375" LENGTH)) (8.940)	00	F (LS1)	AR	274584
144.	2–A16	0.669	BALANCER, CR/SHF	98–02	F (LS1)	1	12553118
145.	2–A16	0.362	BOLT, CR/SHF BALR (HFH M16X2.0X103, 59 THD, 48 MM OD, 10.9, GM7114M, MACH)	98–01	F (LS1)	1	12557840
	2–A16	0.662	BOLT, CR/SHF BALR (HFH M16X2.0X103, 59 THD, 48 MM OD, 10.9, GM7114M, MACH)	02	F (LS1)	1	12557840

cardiagn.com

148.	2–A16	0.662	KEY, CR/SHF BALR (LGTH–37.5MM, WIDTH–4.77MM)	98–02	F (LS1)	1	12561513
149.	2–A16	0.646	CRANKSHAFT, (INCLS ITEM #180)	98–02	F (LS1)	1	12559354
150.	2–A10	0.096	BEARING KIT, CR/SHF (#1, 2, 4, 5) (STD)	98–02	F (LS1)	4	88890525
	2–A10	0.096	BEARING KIT, CR/SHF THR (#3)	98–02	F (LS1)	1	88890526
152.	2–A10	0.137	GASKET, CR/SHF RR OIL SEAL HSG	98–02	F (LS1)	1	12559769
154.	2–A10	0.137	BOLT, CR/SHF RR OIL SEAL HSG (HFH M8X1.25X30, 23.85 THD, 10.9, PZ GM7114M, MACH) (8.900)	98–01	F (LS1)	12	12551187
	2–A10	0.137	BOLT, CR/SHF RR OIL SEAL HSG (HFH M8X1.25X30, 23.85 THD, 10.9, PZ GM7114M, MACH) (8.900)	02	F (LS1)	12	12551187
155.	2–A10	0.137	HOUSING, CR/SHF RR OIL SEAL	98–02	F (LS1)	1	12559287
156.	2–A15	0.539	BEARING, CM/SHF (#1, #5)	98–02	F (LS1)	2	12453167
	2–A15	0.539	BEARING, CM/SHF (#2, #4)	98–02	F (LS1)	2	12453168
	2–A15	0.539	BEARING, CM/SHF (#3)	98–02	F (LS1)	1	12453169
157.	2–A15	0.529	RETAINER, CM/SHF	98–02	F (LS1)	1	12556457
158.		8.900	BOLT, HFH, M8X1.25X20, 17THD, 18OD (CM/SHF RET)	98–02		4	11515756
159.	2–A18	0.724	CHAIN, CM/SHF TMG	98–02	F (LS1)	1	12552954
160.	2–A19	0.738	BOLT, CM/SHF SPKT (M8X1.25X24.4) (20 THD) (0.056)	98–02	F (LS1)	3	12556127
161.	2–A19	0.736	SPROCKET, CM/SHF (0.728)	98–02	F (LS1)	1	12552953
162.	2–A19	0.738	PIN, CM/SHF SPKT LOC (1/4 X 5/8) (8.939)	98–02	F (LS1)	1	12554553
163.	2–A14	0.519	CAMSHAFT, ENG	98–00	F (LS1)	1	12560965
	2–A14	0.519	CAMSHAFT, ENG	01–02	F (LS1)	1	12561721
166.		8.970	PLUG, CUP 5/8 HOLE CORROSION RESISTANT STL PL (ENG BLK OIL GAL)	98–02		1	9427693
167.		N.S.	PIN, FLYWHL LOC (PART OF 129)				
168.	2–A9	0.034	PLUG, ENG BLK COOL DRN HOLE (M16X1.5X6G) (STEEL, ZIVC 4345M, USE T/W SEALER 12346004 (OR EQUIV))	98–02	F (LS1)	1	21007339
169.	2–A9	0.034	PLUG, ENG BLK COOL DRN HOLE (LEFT SIDE ONLY) (M28X1.25X12.4)	98–02	F (LS1)	LH	12561663
170.	2–B25	1.531	PLUG, ENG BLK OIL GAL (M16X1.5X6G) (STEEL, ZIVC 4345M, USE T/W SEALER 12346004 (OR EQUIV)) (0.034)	98–01	F (LS1)	2	21007339
	2–B25	1.531	PLUG, ENG BLK OIL GAL (M16X1.5X6G) (STEEL, ZIVC 4345M, USE T/W SEALER 12346004 (OR EQUIV)) (0.034)	02	F (LS1)	2	21007339
171.		8.900	BOLT, HFH, M8X1.25X20, 17THD, 18OD (CR/SHF RET)	98–02		1	11515756
172.	2–L14	2.383	SENSOR, CR/SHF POSN (INCL ITEM#173) (AC–DELCO #213–354)	98–02	F (LS1)	1	12560228

cardiagn.com

173.		N.S.	SEAL, O-RING CR/SHF POSN (PART OF ITEM #172		.....		
174.	2-A21	0.862	BOLT, CLU PRESS PLT (HEX FLG HD) (M10X1.5X30) (8.900)	98	F (LS1)	6	11516328
	2-A21	0.862	BOLT, CLU PRESS PLT (HFH M10X1.5X20 10.9 7114M HDR PT, 17.3 FLANGE)	98-02	F (LS1)	6	12561465
179.	2-A9	0.056	BOLT, CR/SHF BRG CAP (M8X1.25X24.4) (20 THD)	98-01	F (LS1)	10	12556127
	2-A9	0.056	BOLT, CR/SHF BRG CAP (M8X1.25X24.4) (20 THD)	02	F (LS1)	10	12556127
180.		N.S.	RING, CR/SHF POSN SEN EXCITOR (PART OF ITEM #149) .		.....		
181.		8.970	PLUG, EXPANSION PLUG CUP SHAPE 1" STEEL (CR/SHF HOLE) (0.293)	98-02	.....	2	24502262

RPO DEFINITIONS

LS1 – ENGINE GAS, 8 CYL, 5.7L, SFI, ALUMINUM ENGINE
MM6 – TRANSMISSION MAN 6 SPD, BORG WARNER, 85MM, 1ST 2.66, 6TH 0.50, O/D
M30 – TRANSMISSION,AUTOMATIC 4 SPEED,4L60E,ELECTRONIC

cardiagn.com

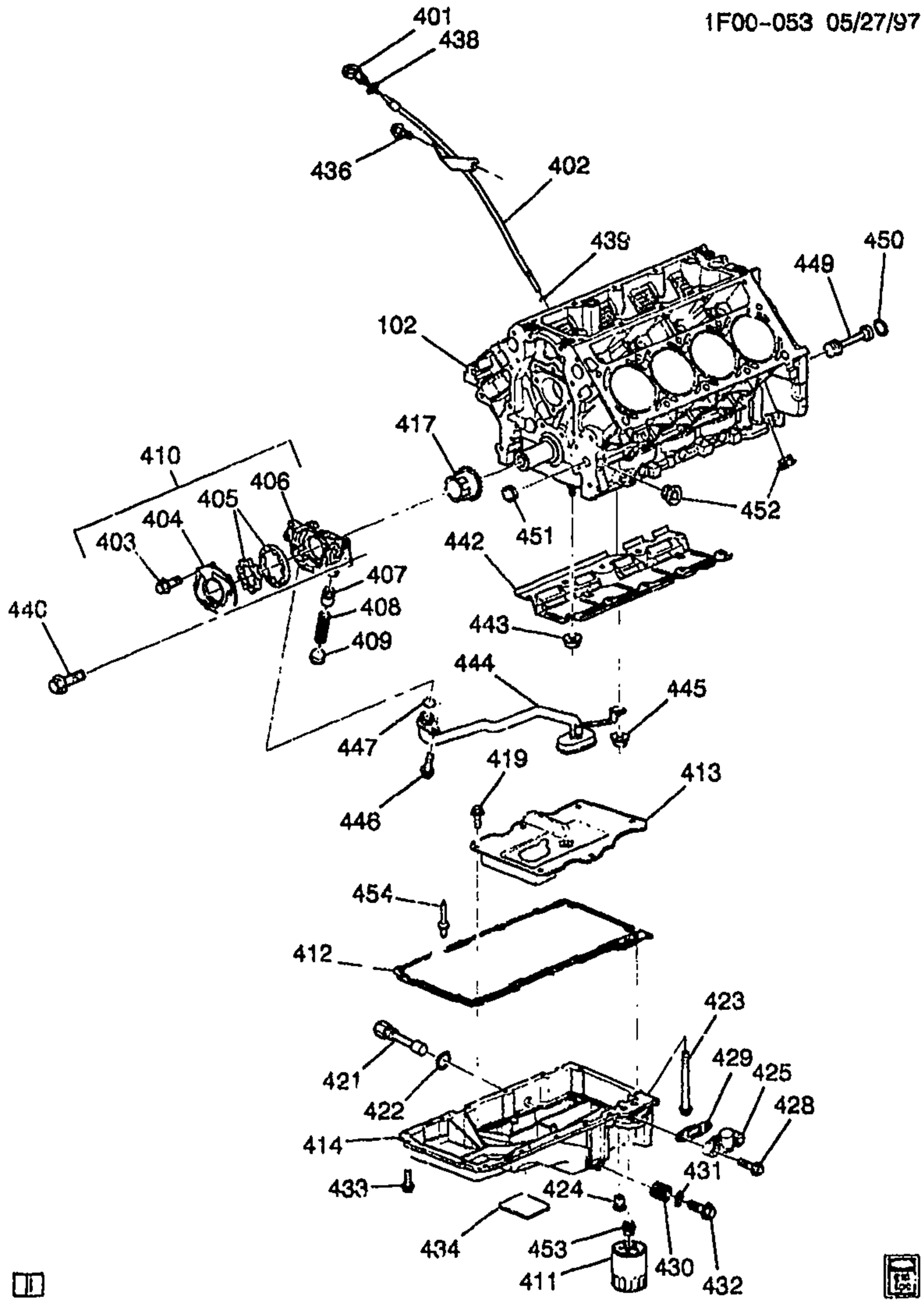

1F00-053

1998-2002 F ENGINE ASM-5.7L V8 PART 4 OIL PUMP, PAN & RELATED PARTS (LS1/5.7G)

102.		N.S.	BLOCK, ENG		.....		
401.	2-B23	1.516	INDICATOR, OIL LVL	98-02	F (LS1)	1	12551581
402.	2-B23	1.516	TUBE, OIL LVL IND (INCL #439) .	98-02	F (LS1)	1	12551577
403.		8.977	SCREW, M6X1X20, 12.7 OD, 6202M, FO (O/PMP CVR) (PART OF 410)	98-02	(LS1)	7	11514300

cardiagn.com

404.		N.S.	COVER, O/PMP (PART OF 410) ..				
405.		N.S.	GEAR SET, O/PMP (PART OF 410) ..				
406.		N.S.	HOUSING, O/PMP (PART OF 410)				
407.		N.S.	VALVE, OIL PRESS RLF (PART OF 410)				
408.		N.S.	SPRING, OIL PRESS RLF VLV (PART OF 410)				
409.		N.S.	PLUG, OIL PRESS RLF VLV BORE (PART OF 410)				
410.	2-B27	1.652	PUMP, OIL (INCLS 403, 404, 405, 406, 407, 408, 409)	98-02	F (LS1)	1	12563964
411.	2-C4	1.836	FILTER, OIL (1.835) (AC-DELCO #PF44C)	98-02	F (LS1)	1	729854
	2-C4	1.836	FILTER, OIL (PF44) (AC-DELCO #PF44)	98-02	F (LS1)	1	25010633
	2-C4	1.836	FILTER, OIL (AC-DELCO #SPF44)	98-01	F (LS1)	1	25329388
	2-C4	1.836	FILTER, OIL (AC-DELCO #UPF44)	98-01	F (LS1)	1	25329389
412.	2-B23	1.429	GASKET, OIL PAN (UPR TO BLK) (PART OF 414)	98-02	F (LS1)	1	12558760
413.	2-B23	1.430	BAFFLE, OIL PAN (PART OF 414)	98-02	F (LS1)	1	12558254
414.	2-B22	1.426	PAN, OIL (INCLS #412, 413, 419, 421, 422, 423, 424, 425, 428, 429, 430, 431, 432, 433, 434)	98-02	F (LS1)	1	12558762
417.	2-A19	0.728	SPROCKET, CR/SHF	98-02	F (LS1)	1	12556582
419.	2-B23	1.430	BOLT, OIL PAN BFL (ALSO PART OF 414) (14.865)	98-02	F (LS1)	8	10258914
421.	2-B23	1.516	SWITCH, ENG OIL LVL IND (CAUTION: (APPLY MOTOR OIL TO THREADS-DO NOT EXCEED INSTALLATION**TORQUE) (INCLS 422) (PART OF 414)	98-02	F (LS1)	1	24507190
422.		N.S.	SEAL, ENG OIL LEVER IND (PART OF 421, 414				
423.	2-B22	1.428	BOLT, OIL PAN (PART OF 414) (M6X1.0X136, 85 THD, 14.2 OD, 10.9, GM7114M, MACH)	98-01	F (LS1)	2	12554990
	2-B22	1.428	BOLT, OIL PAN (PART OF 414) (M6X1.0X136, 85 THD, 14.2 OD, 10.9, GM7114M, MACH)	02	F (LS1)	2	12554990
424.	2-C5	1.837	VALVE, OIL FLTR BYPASS (PART OF 414)	98-02	F (LS1)	1	25014051
425.	2-B22	1.426	COVER, OIL PAN (PART OF 414)	98-02	F (LS1)	1	12551595
428.		8.900	BOLT, M6X1X30, POR 9.8 (OIL PAN CVR) (PART OF #414)	98-02	(LS1)	2	11516425
429.	2-B23	1.429	GASKET, OIL PAN CVR (TO OIL FILTER HSG) (PART OF #414)	98-02	F (LS1)	1	12553210
430.		N.S.	INSERT, OIL PAN DRN PLUG THD (PART OF 414)	98-01	F (LS1)	1	11503302
		N.S.	INSERT, OIL PAN DRN PLUG THD (PART OF 414)	02	F (LS1)	1	11503302
431.	2-B23	1.456	SEAL, OIL PAN DRN PLUG (O RING) (PART OF #414)	98-02	F (LS1)	1	3536966

cardiagn.com

432.	2-B23	1.453	PLUG, OIL PAN DRN (PART OF 414) (M12X1.75-6GX44.45) (W/MAGNET & SEAL)	98-02	F (LS1)	1	24100042
433.	2-B22	1.428	BOLT, OIL PAN (PART OF 414) (HFH M8X1.25X30, 23.85 THD, 10.9, PZ GM7114M, MACH) (8.900)	98-01	F (LS1)	13	12551187
	2-B22	1.428	BOLT, OIL PAN (PART OF 414) (HFH M8X1.25X30, 23.85 THD, 10.9, PZ GM7114M, MACH) (8.900)	02	F (LS1)	13	12551187
434.		N.S.	LABEL, OIL PAN IDENT (PART OF 414)	98-01	F (LS1)	1	
		N.S.	LABEL, OIL PAN IDENT (PART OF 414)	02	F (LS1)	1	12556010
436.		8.900	BOLT, M10X1.5X 25 POINTED, 21MM THD, 21.5 OD (OIL LVL IND TUBE)	98-02	.....	1	11515765
438.	2-B23	1.516	SEAL, OIL LVL IND (O RING) (PART OF #401) (BLACK) (6.07MM ID, 17.8MM DIA)	98-01	F (LS1)	1	24504091
	2-B23	1.516	SEAL, OIL LVL IND (O RING) (PART OF #401) (BLACK) (6.07MM ID, 17.8MM DIA)	02	F (LS1)	1	24504091
439.		N.S.	SEAL, OIL LVL IND TUBE O-RING (PART OF #402		.....		
440.	2-B27	1.652	BOLT, O/PMP (HFH M8X1.25X30, 23.85 THD, 10.9, PZ GM7114M, MACH) (8.900)	98-01	F (LS1)	7	12551187
	2-B27	1.652	BOLT, O/PMP (HFH M8X1.25X30, 23.85 THD, 10.9, PZ GM7114M, MACH) (8.900)	02	F (LS1)	7	12551187
442.	2-B23	1.430	DEFLECTOR, CR/SHF OIL	98-02	F (LS1)	1	12558253
443.		8.917	NUT, HFH, M8X1.25X8.8, 17.9 OD, 10 DIN, PREV TORQUE (CR/SHF OIL DFL)	98-02	.....	9	11517031
444.	2-B27	1.656	SCREEN, O/PMP (W/SUC PIPE) .	98-02	F (LS1)	1	12558251
445.		8.917	NUT, HFH, M8X1.25X8.8, 17.9 OD, 10 DIN, PREV TORQUE (O/PMP SUC PIPE)	98-02	.....	1	11517031
446.		8.900	BOLT/SCREW, HFH M6X1X20, 9.8, 7114M, DOG PT, 14.2 OD (O/PMP SUC PIPE)	98-02	.....	1	11516398
447.	2-B28	1.724	SEAL, O/PMP (O RING)	98-02	F (LS1)	1	12557752
449.	2-B25	1.531	PLUG, ENG BLK OIL GAL (INCL 450)	98-01	F (LS1)	1	12558340
	2-B25	1.531	PLUG, ENG BLK OIL GAL (INCL 450)	02	F (LS1)	1	12558340
450.		N.S.	SEAL, ENG BLK OIL GAL PLUG (O RING) (PART OF 449)		.....		
451.		8.970	PLUG, CUP 5/8 HOLE CORROSION RESISTANT STL PL (ENG BLK OIL GAL)	98-02	.....	1	9427693
452.	2-B25	1.531	PLUG, ENG BLK OIL GAL (M16X1.5X6G) (STEEL, ZIVC 4345M, USE T/W SEALER 12346004 (OR EQUIV)) (0.034) ..	98-01	F (LS1)	2	21007339

cardiagn.com

	2–B25	1.531	PLUG, ENG BLK OIL GAL (M16X1.5X6G) (STEEL, ZIVC 4345M, USE T/W SEALER 12346004 (OR EQUIV)) (0.034) ..	02	F (LS1)	2	21007339
453.	2–C5	1.855	FITTING, OIL FLTR	98–02	F (LS1)	1	12552357
454.		N.S.	RIVET, OIL PAN GSKT		.....		

RPO DEFINITIONS
LS1 – ENGINE GAS, 8 CYL, 5.7L, SFI, ALUMINUM ENGINE

cardiagn.com

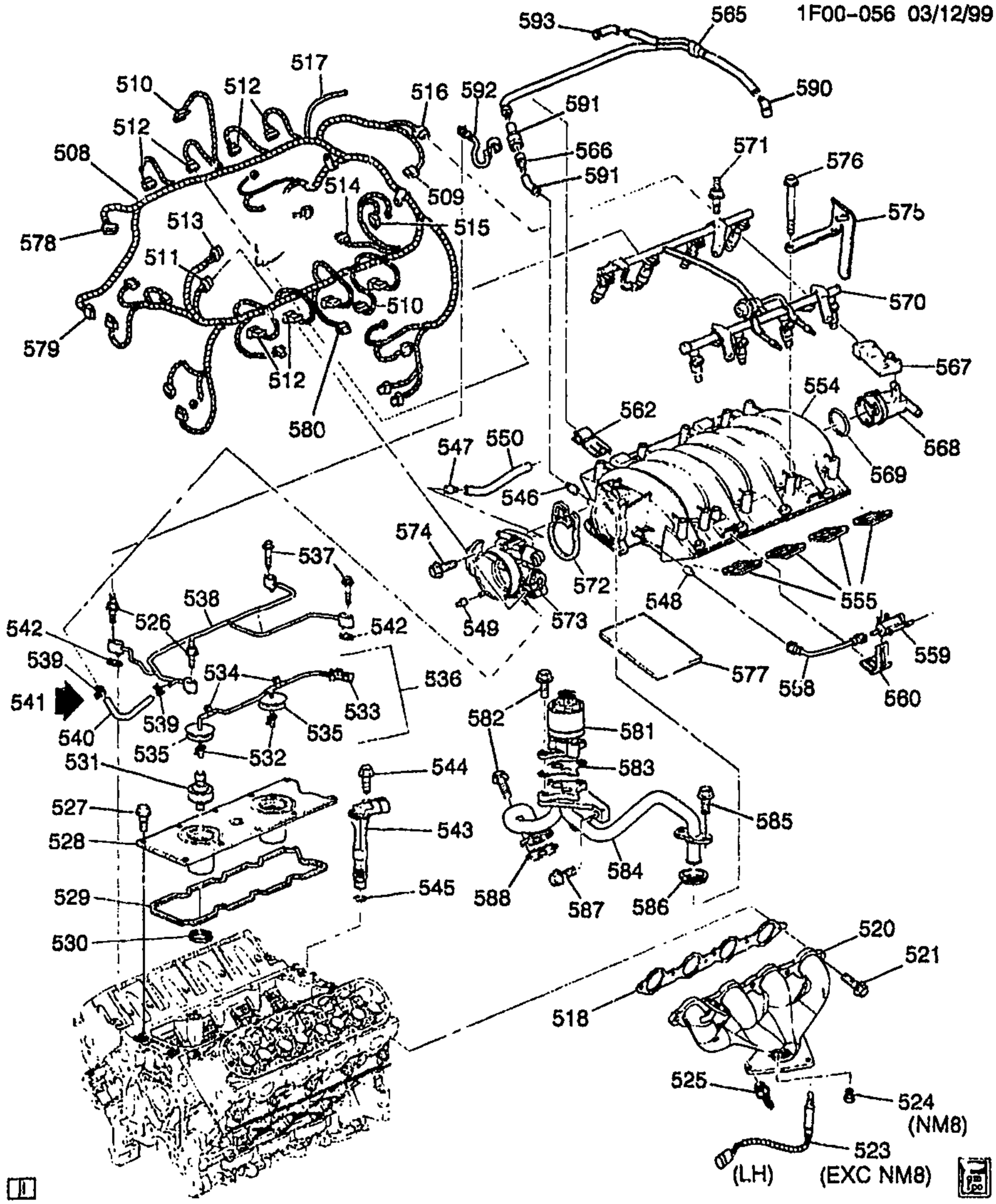

1999 F ENGINE ASM–5.7L V8 PART 5 MANIFOLDS AND FUEL RELATED PARTS (LS1/5.7G)

508.	2–M5	2.525	HARNESS, ENG WRG	99 F (LS1, M30)	1	12177652
	2–M5	2.525	HARNESS, ENG WRG	99 F (LS1, MM6)	1	12177653
509.	2–L14	2.383	CONNECTOR, SEN–CM/SHF POSN (TO CALLOUT 543) (BLACK) (3–WAY F) (W/LEADS) (2.535) (AC–DELCO #PT117) ...	99 F (LS1)	1	12085495

cardiagn.com

510.	2–L14	2.383	**CONNECTOR**, MDL–ELEK IGN CONT (7–WAY F, W/LEADS) (8.965) (AC–DELCO #PT381) ...	99	F (LS1)	2	12102754
511.	2–M23	3.339	**CONNECTOR**, SEN–THROT POSN (BLACK) (3–WAY F) (W/LEADS) (2.535) (AC–DELCO #PT375)	99	F (LS1)	1	12102748
512.	2–M4	2.483	**CONNECTOR**, INJR–FUEL (2–WAY F) (W/LEADS) (2.535) (AC–DELCO #PT113)	99	F (LS1)	8	12085491
513.	2–M23	3.338	**CONNECTOR**, MOT–IDLE AIR C/VLV (4–WAY F) (W/LEADS) (2.383) (AC–DELCO #PT757) ...	99	F (LS1)	1	12126487
514.	2–M8	2.530	**CONNECTOR**, INLINE–TO KNOCK SEN (BLACK) (2–WAY F W/LEADS) (3.670) (AC–DELCO #PT374)	99	F (LS1)	2	12102747
515.	2–B23	1.516	**CONNECTOR**, SEN–ENG OIL LVL (BLACK) (2–WAY F W/LEADS) (3.670) (AC–DELCO #PT374)	99	F (LS1)	2	12102747
516.	2–N8	3.682	**CONNECTOR**, SEN–MAP (GRAY) (3–WAY F)	99	F (LS1)	1	12129946
517.	2–N5	3.675	**HOSE**, MAP SEN VAC	99	F (LS1)	1	12186680
518.	2–M19	3.270	**GASKET**, EXH MANIF (*KIT1)	99	F (LS1)	2	12558573
520.	2–M24	3.601	**MANIFOLD**, EXH (INCLS 525) ..	99	F (LS1, M30, MM6)	RH	12560193
	2–M24	3.601	**MANIFOLD**, EXH (INCLS 525) ..	99	F (LS1, M30, MM6)	LH	12560194
521.		8.900	**BOLT**, HWH, M8X1.25X32, 22.9 THD, 9.8, PS (EXH MANIF)	99	F (LS1)	8	12551187
523.	2–N8	3.682	**SENSOR**, HTD OXY (POSN 1) (EXC NM8) (USE WITH CONNECTOR 580) (AC–DELCO #AFS97)	99	F (LS1)	1	25312196
524.		8.971	**PLUG–EXT**, M18X1.5X10 TAPPERED 1:16, 19 OD. 22 OAL, SAE 1010/1012 (OXY SEN HOLE)	99	F (LS1)	1	25509274
525.	2–M26	3.613	**STUD**, EXH PIPE (PART OF 520) .	99	F (LS1)	6	10220453
526.	2–B13	1.097	**STUD**, ENG COOL AIR BL PIPE ..	99	F (LS1)	2	12561089
527.		8.900	**BOLT**, HWH, M8X1.25X40, SPL FULLTHD, AC PT, 10.9 PZOR (PART OF 528)	99	F (LS1)	10	11515758
528.	2–M19	3.265	**COVER**, ENG BLK VALLEY (INCLS 527, 529, 530)	99	F (LS1)	1	12561106
529.	2–M19	3.270	**GASKET**, ENG BLK VALLEY CVR (PART OF 528)	99	F (LS1)	1	12558178
530.	2–L14	2.383	**GROMMET**, KNOCK SEN (PART OF 528)	99	F (LS1)	2	12558177
531.	2–L14	2.383	**SENSOR**, KNOCK (W/O LOCATING TAB; 1ST DES SEE 10456222) (AC–DELCO #213–362)	99	F (LS1) (2ND DES)	2	10456603
532.	2–L14	2.383	**CONNECTOR**, SEN–KNOCK (PART OF 536; (1–WAY M, W/LEADS, HIGH TEMP) (1.150) (AC–DELCO #PT7[illegible])	99	F (LS1)	2	12126456

cardiagn.com

533.	2-M8	2.530	**CONNECTOR**, INLINE-TO ENG HARN (PART OF 536) (BLACK) (2-WAY M) (W/LEADS) (4.720) (AC-DELCO #PT786)	99	F (LS1)	1	12167120
	2-M8	2.530	**CONNECTOR**, INLINE-TO ENG HARN (PART OF 536) (10-WAY M W/LEADS) (2.535) (AC-DELCO #PT215)	99	F	1	12101823
	2-M8	2.530	**CONNECTOR**, INLINE-TO ENG HARN (PART OF 536) (BLACK) (10-WAY M) (AC-DELCO #PT505) (TO FWD LP WRG)	99	F	1	12117372
	2-M8	2.530	**CONNECTOR**, INLINE-TO ENG HARN (PART OF 536) (BLUE) (10-WAY M, W/O LEADS)	99	F	AR	12103188
	2-M8	2.530	**CONNECTOR**, INLINE-TO ENG HARN (PART OF 536) (8-WAY M, W/LEADS) (AC-DELCO #PT443)	99	F	1	12117270
	2-M8	2.530	**CONNECTOR**, INLINE-TO ENG HARN (PART OF 536) (1-WAY M) (W/LEAD) (BLACK) (AC-DELCO #PT1223)	99	F	1	12085669
	2-M8	2.530	**CONNECTOR**, INLINE-TO ENG HARN (PART OF 536) (7-WAY M, W/LEADS) (AC-DELCO #PT281)	99	F (LS1)	1	12102490
	2-M8	2.530	**CONNECTOR**, INLINE-TO ENG HARN (PART OF 536) (BLACK) (2-WAY M) (W/LEADS) (4.720) (AC-DELCO #PT786)	99	F (LS1)	1	12167120
534.		N.S.	**CLIP**, HARNESS KNOCK SENSOR JUMPER (PART OF 536	99	F (LS1)	2	
535.		N.S.	**GROMMET**, KNOCK SEN (PART OF 536)	99	F (LS1)	2	
536.	2-L17	2.480	**WIRE**, KNOCK SEN (INCLS 532, 533, 534, 535)	99	F (LS1)	1	15372170
537.		8.900	**BOLT**, METRIC HEX FLG HD (M6X1X30) (POR 9.8) (ENG COOL AIR BL PIPE)	99	.....	4	11514008
538.	2-B13	1.097	**PIPE**, ENG COOL AIR BL (INCLS 539, 541, 542)	99	F (LS1)	1	12562169
539.		8.948	**CLAMP**, SPRG BAND, 14.2MM, 9/16 OD HOSE, POR (ENG COOL AIR BL HOSE) (PART OF 538) ...	99	.....	2	25526358
540.	2-B13	1.097	**HOSE**, ENG COOL AIR BL (PART OF 538)	99	F (LS1)	1	12562165
541.		8.800	**LUBRICANT**, RUBBER 5 GAL (LUBRICANT, ENG COOL AIR BL HOSE)	99	F (LS1)	AR	12345884
542.	2-B13	1.097	**SEAL**, ENG COOL AIR BL PIPE (O RING) (PART OF 538)	99	F (LS1)	4	12551933
543.	2-L14	2.383	**SENSOR**, CM/SHF POSN (INCL 545) (USE WITH 509 CONNECTOR) (AC-DELCO #213-363)	99	F (LS1)	1	12561211
544.		8.900	**BOLT**, HFH, M8X1.25X20, 17THD, 18OD (CR/SHF POSN SEN)	99	.....	1	11515756
545.		N.S.	**SEAL**, CM/SHF POSN SEN HOLE PLUG (O RING) (PART OF 543) ..	99	F (LS1)	1	

cardiagn.com

546.		N.S.	**CONNECTOR**, PCV CR/CASE VENT (PART OF 554		F	1	
547.		N.S.	**CONNECTOR**, PCV FRESH AIR TO CR/CASE (PART OF 573		F	1	
548.		N.S.	**CONNECTOR**, PURGE PORT (PART OF 554		F	1	
549.		N.S.	**CONNECTOR**, VAPOR VENT TUBE (PART OF 573		F	1	
550.	2-C3	1.762	**TUBE**, PCV (FROM RIGHT SIDE ROCKER ARM COVER (VALVE COVER) CONNECTOR TO THROTTLE BODY)	99	F (LS1)	1	12556454
554.	2-M19	3.265	**MANIFOLD**, INT (SERV) (SEE GROUP 3.000 "FUEL RAIL, INTAKE MANIFOLD, THROTTLE BODY "FOR DETAIL ILLUSTRATED VIEW.) (INCLS 546, 548, 568, 569)	99	F (LS1)	1	12561269
555.	2-M19	3.270	**GASKET KIT**, INT MANIF (CONTAINS 8 GASKETS)	99	F (LS1)	1	12533587
558.	2-M17	3.145	**TUBE**, EVAP EMIS CNSTR PURGE (FROM VALVE TO THROTTLE BODY)	99	F (LS1)	1	12552222
559.	2-M16	3.130	**VALVE**, EVAP EMIS CNSTR PURGE SOL (AC-DELCO #214-641)	99	F (LS1)	1	1997278
560.	2-M16	3.130	**BRACKET**, EVAP EMIS CNSTR PURGE SOL VLV	99	F (LS1)	1	12560884
562.	2- C3	1.762	**RETAINER**, PCV VLV PIPE	99	F (LS1)	2	12557340
565.	2-C3	1.762	**PIPE**, PCV VLV (INCLS 566, 590, 591, 592)	99	F (LS1)	1	12562580
566.		N.S.	**VALVE**, PCV (PART OF 565)		.....		
567.	2-N8	3.682	**SENSOR**, MAP (W/SEAL) (AC-DELCO #213-331)	09	F (LS1)	1	16212460
	2-N8	3.682	**CONNECTOR**, SEN-MAP (GRAY) (3-WAY F)	99	F (LS1)	1	12129946
568.		N.S.	**PLUG**, MAP SEN HOLE (PART OF 554)		.....		
569.		N.S.	**SEAL**, MAP SEN HOLE PLUG (O RING) (PART OF 554)		.....		
570.	2-M21	3.330	**RAIL**, SEQ M/PORT F/INJN FUEL (SEE GROUP 3.000 "RAIL" FOR DETAIL ILLUSTRATED VIEW.) (AC-DELCO #217-1401)	99	F (LS1)	1	12562815
571.	2-M21	3.330	**STUD**, F/INJN FUEL RL (HFH 6X1X18.5X14 W/ADH., 6X1X14, 39.1 OAL, 14.2 OD, 9.8, 7114M) (AC-DELCO #12554211)	99	F (LS1)	4	12554211
572.	2-M22	3.336	**SEAL**, THROT BODY	99	F (LS1)	1	12552542
573.	2-M21	3.335	**BODY**, THROT (SEE GROUP 3.000 "BODY, THROT"FOR DETAIL ILLUSTRATED VIEW. (INCLS 547, 549) (AC-DELCO #17113390)	99	F (LS1)	1	17113390
	2-M23	3.338	**CONNECTOR**, MOT-IDLE AIR C/VLV (4-WAY F) (W/LEADS) (2.383) (AC-DELCO #PT757) ...	99	F (LS1)	1	12126487

cardiagn.com

	2-M23	3.339	CONNECTOR, SEN-THROT POSN (BLACK) (3-WAY F) (W/LEADS) (2.535) (AC-DELCO #PT375)	99	F (LS1)	1	12102748
574.	2-M22	3.336	BOLT, THROT BODY (M6X1.0X30) (8.900)	99	F (LS1)	3	11514008
575.	2-M21	3.330	BRACKET, F/INJN FUEL RL	99	F (LS1)	LH	12556074
576.	2-M19	3.275	BOLT, INT MANIF (W/FLAT WASHER) (M6X1.0X21.8, 13.6 OD, GM500M, ZF, MACH, ADHES)	99	F (LS1)	10	12552344
577.	2-M19	3.270	SEAL, INT MANIF	99	F (LS1)	2	12560251
578.	2-M26	3.670	CONNECTOR, SOL-EGR VLV (5-WAY F) (W/LEADS) (AC-DELCO #PT747)	99	F (LS1)	1	12126477
579.	2-N28	9.186	CONNECTOR, COIL-A/C CLU (OVAL) (2-WAY F) (W/LEADS) (2.535) (AC-DELCO #PT209) ...	99	F (LS1)	1	12101937
580.	2-N8	3.682	CONNECTOR, INLINE-TO OXY SEN (TO CALLOUT 523) (4-WAY M) (W/LEADS) (2.530) (AC-DELCO #PT919)	99	F (LS1)	4	15305801
	2-N8	3.682	CONNECTOR, INLINE-TO OXY SEN (TO CALLOUT 523) (2-WAY) (W/O LEADS) (2.559) ..	99	F (LS1, NM2)	4	12191286
581.	2-M26	3.670	VALVE, EGR (PROD 17099322) (AC-DELCO #214-5597)	99	F (LS1)	1	17113589
582.		8.900	BOLT-HFH, M8X1.25X40, 22 THD, 18 OD, 10.9, 7112M, MACH (EGR VLV PIPE)	99	.....	AR	11515792
583.	2-N8	3.680	GASKET, EGR VLV (AC- DELCO #219-230)	99	F (LS1)	1	12558353
584.	2-N5	3.675	PIPE, EGR VLV	99	F (LS1)	1	12556643
585.		8.900	BOLT-HFH, M8X1.25X40, 22 THD, 18 OD, 10.9, 7112M, MACH (EGR VLV PIPE)	99	.....	AR	11515792
586.	2-N8	3.680	SEAL, EGR VLV PIPE (O RING) (AC-DELCO #219-235)	99	F (LS1)	1	12557932
587.		8.900	BOLT, M10X1.5X30, 10.9, 7114M, 22 OD, HDR PT (EGR VAC REG VLV BRKT)	99	.....	2	11516328
588.	2-N8	3.680	GASKET, EGR VLV PIPE (AC-DELCO #219-229)	99	F (LS1)	1	12553047
590.		N.S.	ELBOW, PCV VLV (PART OF 565)		.....		
591.		N.S.	PIPE, PCV VLV (PART OF 565) ...		.....		
592.		N.S.	STRAP, PCV HARN (PART OF 565)		.....		
593.		N.S.	ELBOW, PCV VLV (PART OF 565)		.....		

SERVICE KITS

1.	2-A12	0.289	GASKET KIT, CYL HD (REF TO CATLG GRP NOTE #1) (INCLS KIT CONTAINS: GASKETS FOR CYLINDER HEAD, INTAKE AND EXHAUST MANIFOLDS, SEAL-ENG COOL AIR BL PIPE (O-RING)	99	F (LS1)	1	12453264

cardiagn.com

RPO DEFINITIONS

LS1 – ENGINE GAS, 8 CYL, 5.7L, SFI, ALUMINUM ENGINE
MM6 – TRANSMISSION MAN 6 SPD, BORG WARNER, 85MM, 1ST 2.66, 6TH 0.50, O/D
M30 – TRANSMISSION,AUTOMATIC 4 SPEED,4L60E,ELECTRONIC
NM2 – EMISSION SYSTEM EXPORT, LEADED FUEL

cardiagn.com

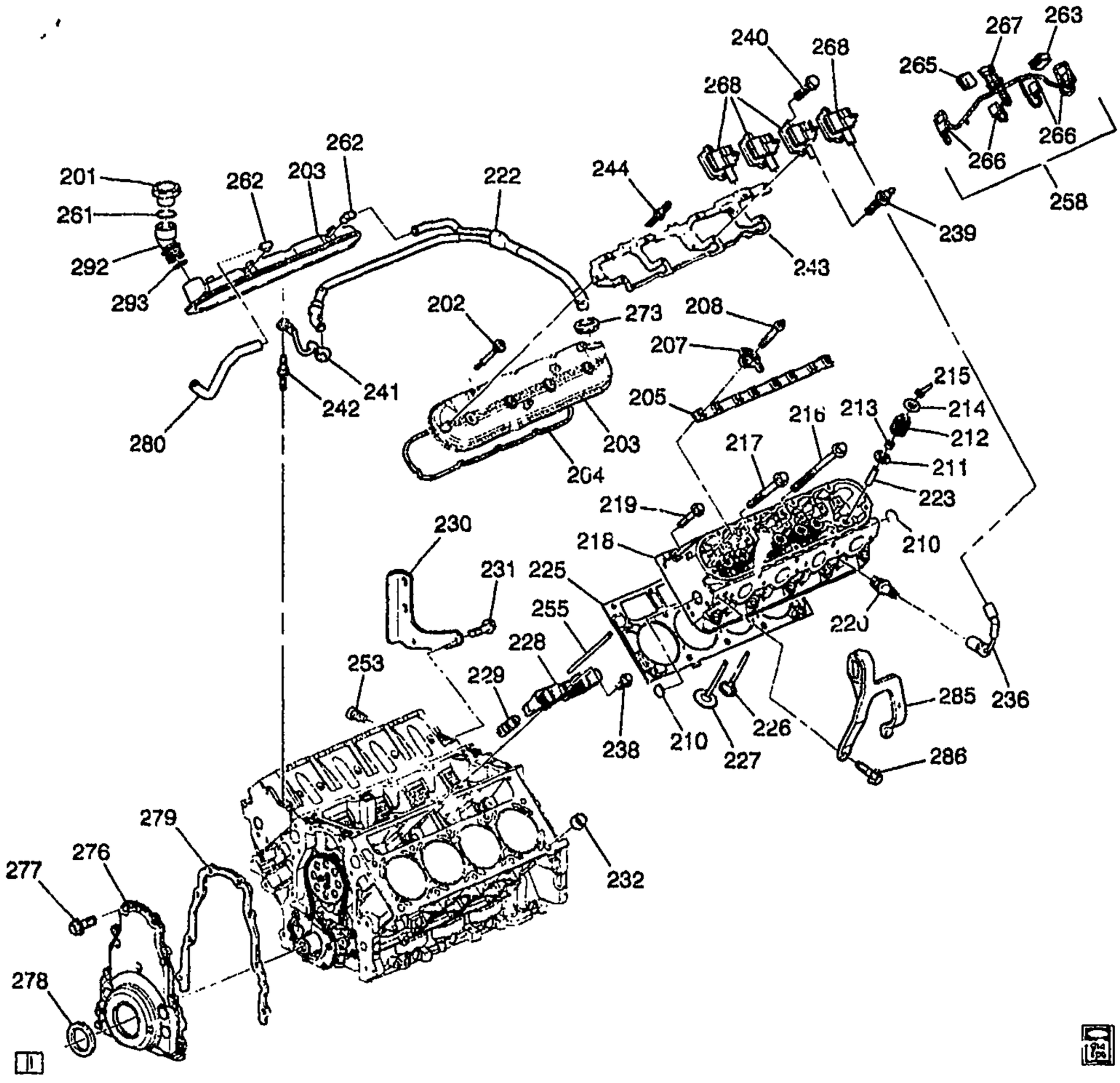

1F00-055

1999-2002 F ENGINE ASM-5.7L V8 PART 2 CYLINDER HEAD AND RELATED PARTS (LS1/5.7G)

201.	2-C2	1.758	CAP, OIL FIL (W/SEAL) (INCLS 261) (SAE 10W-30) (AC-DELCO PFC176)	99-02	F (LS1)	1	24504599
202.	2-A14	0.413	BOLT, VLV RKR ARM CVR (W/GROMMET)	99-02	F (LS1)	8	12559893
203.	2-A13	0.380	COVER, VLV RKR ARM (INCL 273)	99-00	F (LS1)	LH	12559894
	2-A13	0.386	COVER, VLV RKR ARM (INCL 273)	99-01	F (LS1)	RH	12561819

cardiagn.com

	2-A13	0.386	COVER, VLV RKR ARM (INCL 273)	01-02	F (LS1)	LH	12561820
	2-A13	0.386	COVER, VLV RKR ARM (INCL 273) (THREE RAISED BOSS AREA)	02	F (LS1)	RH	12561818
204.	2-A14	0.423	GASKET, VLV RKR ARM CVR (*KIT1)	99-02	F (LS1)	2	12560696
205.	2-A14	0.429	SUPPORT, VLV RKR ARM PIV	99-02	F (LS1)	2	12552203
207.	2-A13	0.333	ARM, VLV RKR	99-02	F (LS1)	16	10214664
208.	2-A13	0.349	BOLT, VLV RKR ARM PIV SUPT	99-02	F (LS1)	16	12560961
210.	2-A12	0.293	PLUG, CYL HD CORE HOLE (CUP, 32.03X7.87X1.47, 1010, 6199-M)	99-01	F (LS1)	4	1647542
	2-A12	0.293	PLUG, CYL HD CORE HOLE (CUP, 32.03X7.87X1.47, 1010, 6199-M)	02	F (LS1)	4	1647542
211.	2-A13	0.303	SHIM, VLV SPR (USED FOR 1999-2001 ONLY)	99-01	F (LS1)	16	12565118
212.	2-A13	0.303	SPRING, VLV	99-02	F (LS1)	16	12553696
213.	2-A13	0.308	SEAL KIT, EXH VLV STEM OIL (14.4MM) (INCLS (8) SEALS)	99-01	F (LS1)	1	12457652
	2-A13	0.308	SEAL KIT, EXH VLV STEM OIL (22.8MM) (INCLS (8) SEALS)	02	F (LS1)	1	12482062
	2-A13	0.308	SEAL KIT, INT VLV STEM OIL (INCLS (8) SEALS)	99-01	F (LS1)	1	12533586
	2-A13	0.308	SEAL KIT, INT VLV STEM OIL (INCLS (8) SEALS)	02	F (LS1)	1	12482063
214.	2-A13	0.309	CAP, VLV SPR	99-02	F (LS1)	16	10166344
215.	2-A13	0.310	KEY, VLV STEM	99-02	F (LS1)	32	10166345
216.	2-A12	0.293	BOLT, CYL HD (M11X2.0X155.0-6G THD) (W/ADHES PATCH)	99-01	F (LS1)	16	12560744
	2-A12	0.293	BOLT, CYL HD (M11X2.0X155.0-6G THD) (W/ADHES PATCH)	02	F (LS1)	16	12560744
217.	2-A12	0.293	BOLT, CYL HD (M11X2.0X100.0-6G THD) (W/ADHES PATCH)	99-01	F (LS1)	4	12560745
	2-A12	0.293	BOLT, CYL HD (M11X2.0X100.0-6G THD) (W/ADHES PATCH)	02	F (LS1)	4	12560745
218.	2-A11	0.289	HEAD, CYL	99-02	F (LS1)	2	12559855
219.	2-A12	0.293	BOLT, CYL HD (SHORT) (8X1.25X45)	99-01	F (LS1)	10	12558840
	2-A12	0.293	BOLT, CYL HD (SHORT) (8X1.25X45)	02	F (LS1)	10	12558840
220.	2-L12	2.270	SPARK PLUG, (AC-DELCO #41-974)	99-02	F (LS1)	8	12563707
222.	2-C3	1.762	PIPE, PCV VLV (INCL 241)	99-02	F (LS1)	1	12562580
223.		N.S.	GUIDE, VLV (PART OF 218)				
225.	2-A12	0.289	GASKET, CYL HD (*KIT1)	99-01	F (LS1)	RH	12558809
	2-A12	0.289	GASKET, CYL HD (*KIT1)	99-01	F (LS1)	LH	12558810
	2-A12	0.289	GASKET, CYL HD (*KIT1)	02	F (LS1)	2	12573949
226.	2-A13	0.297	VALVE, EXH (STD)	99-02	F (LS1)	8	12555907
	2-A13	0.297	VALVE, EXH (0.015" O.S.)	99-02	F (LS1)	8	12562934
227.	2-A12	0.296	VALVE, INT (0.015" O.S.)	99-02	F (LS1)	8	12562952
	2-A12	0.296	VALVE, INT (STD)	99-02	F (LS1)	8	12563063

cardiagn.com

228.	2-A14	0.439	GUIDE, VLV LFTR (ACCOMODATES 4 VLV LFTRS EACH)	99-02	F (LS1)	4	12551162
229.	2-A14	0.459	LIFTER, VLV (AC-DELCO #HL124)	99-02	F (LS1)	16	17122490
230.		N.S.	BRACKET, ENG LIFT RR			1	
231.		8.900	BOLT, HFH, M10X1.5X35, 32THD, 22.3 OD, 10.9, 7114M, MACH (ENG LIFT BRKT)	99-02	(LS1)	2	11515767
232.	2-A12	0.293	PIN, CYL HD LOC (1/2 X 5/8 O.D.)	99-00	F (LS1)	4	12558081
	2-A12	0.293	PIN, CYL HD LOC	01	F (LS1)	4	12570326
	2-A12	0.293	PIN, CYL HD LOC	02	F (LS1)	4	12570326
236.	2-L10	2.240	WIRE, SPLG (POS #1-#8) (STYLE 8DDD) (7.8" LONG) (2.239) (AC-DELCO #348S)	99-02	F (LS1)	8	12192064
	2-L10	2.239	WIRE KIT, SPLG (AC-DELCO #748CC)	99-02	F (LS1)	1	88892763
238.	2-A14	0.459	BOLT, VLV LFTR GDE (HFH M6X1.0X19, 13 THD, 10.9, GM4435M, MACH, DOG PT & SHOULDER)	99-02	F (LS1)	4	12551163
239.	2-L9	2.183	BOLT, IGN COIL (NOTE:BOLT (TYPE STUD W/THREADS END/ SPEAR SHAPE END) (M6X1.X38.6) (SPECIAL)) (MODIFIED HEAD) (POINTED/STUD-TYPE) (1.745)	02	F (LS1)	6	12560038
	2-L9	2.183	BOLT, IGN COIL (NOTE:BOLT (TYPE STUD, IGN COIL (W/THREADS END/ SPEAR SHAPE END) (M6X1.0X38.6 SPECIAL) (MODIFIED HEAD) (POINTED/STUD-TYPE) (1.745)	99-01	F (LS1)	6	12560038
240.	2-L9	2.183	BOLT, IGN COIL (14.865)	99-01	F (LS1)	4	10258914
	2-L9	2.183	BOLT, IGN COIL (14.865)	02	F (LS1)	4	10258914
241.		N.S.	STRAP, PCV HARN (PART OF 222)				
242.	2-B13	1.097	STUD, ENG COOL AIR BL PIPE	99-02	F (LS1)	2	12561089
243.	2-L9	2.183	BRACKET, IGN COIL (AC-DELCO #12562864)	99-02	F (LS1)	1	12562864
	2-L9	2.183	BRACKET, IGN COIL (AC-DELCO #12563288)	01-02	F (LS1)	1	12563288
244.	2-L9	2.183	STUD, IGN COIL BRKT (HFH 6X1X13.5X14 W/ADH, 6X1X14, 39.1 OAL, 14.2 OD, 9.8, 7114M) (3.330) (AC-DELCO #12554211)	99-02	F (LS1)	10	12554211
253.	2-A12	0.293	PLUG, CYL HD CORE HOLE (THREADED)	99-02	F (LS1)	1	12553191
255.	2-A14	0.426	ROD, VLV PUSH	99-02	F (LS1)	16	10238852
258.	2-L10	2.240	WIRE, IGN COIL (INCLS 263, 265, 266, 267) (W/CLIP) (AC-DELCO #12562863)	99-00	F (LS1)	1	12562863
	2-L10	2.240	WIRE, IGN COIL (INCLS 263, 265, 266, 267) (W/CLIP)	01-02	F (LS1)	1	12569111
261.		N.S.	SEAL, O-RING FIL (PART OF ITEM #201				

cardiagn.com

262.		N.S.	ELBOW, PCV (PART OF ITEM #203)				
263.		N.S.	CLIP, IGN COIL WIRE (PART OF 258)				
265.		N.S.	BRACKET, ENG WRG HARN CONN				
266.	2-L9	2.170	CONNECTOR, COIL-IGN (4-WAY F) (W/LEADS, IN A ROW) (4.651) (AC-DELCO #PT368)	99-01	F (LS1)	4	12102741
	2-L9	2.170	CONNECTOR, COIL-IGN (4-WAY F) (W/LEADS, IN A ROW) (4.651) (AC-DELCO #PT368)	02	F (LS1)	4	12102741
267.	2-M8	2.530	CONNECTOR, INLINE-TO ENG HARN (7-WAY M, W/LEADS) (AC-DELCO #PT281)	99-01	F (LS1)	1	12102490
	2-M8	2.530	CONNECTOR, INLINE-TO ENG HARN (7-WAY M, W/LEADS) (AC-DELCO #PT281)	02	F (LS1)	1	12102490
268.	2-L9	2.170	COIL, IGN (AC-DELCO #D580)	99-02	F (LS1)	8	12558948
273.	2-B28	1.745	GROMMET, PCV VLV (PART OF 203)	99-02	F (LS1)	1	10198949
276.	2-A11	0.206	COVER, ENG FRT (INCLS CVR, SEAL, GSKT, BOLT)	99-02	F (LS1)	1	12561243
277.	2-A10	0.137	BOLT, CR/SHF RR OIL SEAL HSG (HFH M8X1.25X30. 23.85 THD, 10.9, PZ GM7114M, MACH) (8.900)	99-02	F (LS1)	12	12551187
278.	2-A11	0.213	SEAL, CR/SHF FRT OIL	99-02	F (LS1)	1	12561244
279.	2-A11	0.207	GASKET, ENG FRT CVR	99-02	F (LS1)	1	12558013
280.	2-C3	1.762	TUBE, PCV (FROM RIGHT SIDE ROCKER ARM COVER (VALVE COVER) CONNECTOR TO THROTTLE BODY)	99-02	F (LS1)	1	12556454
285.		N.S.	BRACKET, ENG LIFT FRT				
286.	2-A9	0.004	BOLT, ENG LIFT BRKT (M10X1.5X35, 32THD, 10.9) (8.900)	99-01	F (LS1)	2	11515767
	2-A9	0.004	BOLT, ENG LIFT BRKT (M10X1.5X35, 32THD, 10.9) (8.900)	02	F (LS1)	2	11515767
292.	2-B28	1.745	TUBE, OIL FIL (INCLS 293)	99-02	F (LS1)	1	12559505
293.		N.S.	SEAL, O-RING FIL (PART OF ITEM #292				

cardiagn.com

SERVICE KITS

1.	2–A12	0.289	GASKET KIT, CYL HD (REF TO CATLG GRP NOTE #1) (INCL 204, 225) (KIT INCLUDES: GASKETS FOR CYLINDER HEAD, INTAKE AND EXHAUST MANIFOLD, VALVE COVERS AND SEAL, ENG COOL AIR BL PIPE (O–RING)	99–01	F (LS1)	1	12453264
		0.289	GASKET KIT, CYL HD (INCL 204, 225) (KIT INCLUDES: GASKETS FOR CYLINDER HEAD, INTAKE AND EXHAUST MANIFOLD, VALVE COVERS AND SEAL, ENG COOL AIR BL PIPE (O–RING) ...	02	.....		

RPO DEFINITIONS

LS1 – ENGINE GAS, 8 CYL, 5.7L, SFI, ALUMINUM ENGINE

cardiagn.com

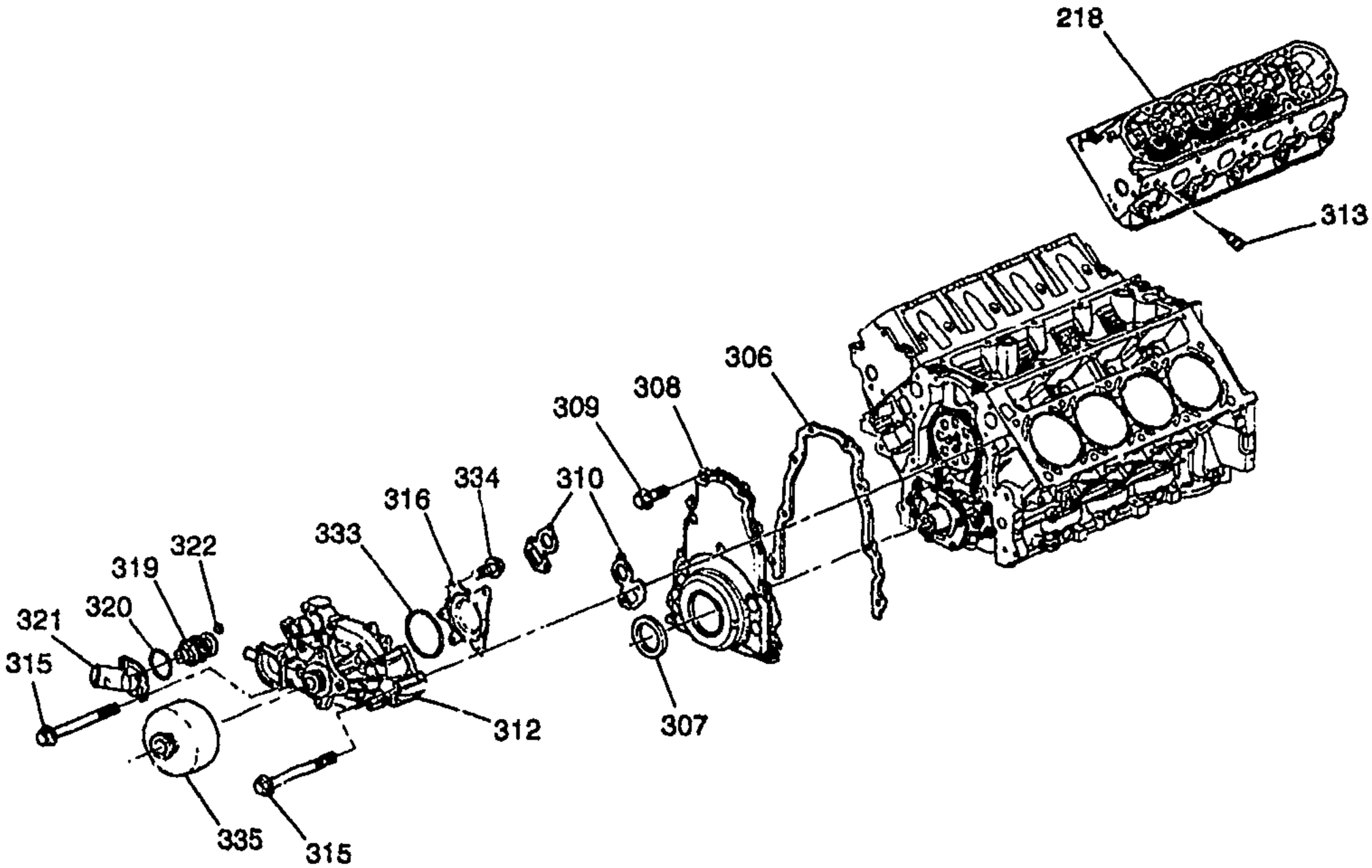

1Y00-057F

1999-2002 F ENGINE ASM-5.7L V8 PART 3 FRONT COVER & COOLING (LS1/5.7G)

218.	2-A11	0.269	HEAD, CYL	99-02	F (LS1)	2	12559855
306.	2-A11	0.207	GASKET, ENG FRT CVR	99-02	F (LS1)	1	12558013
307.	2-A11	0.213	SEAL, CR/SHF FRT OIL (ALSO PART OF 308)	99-02	F (LS1)	1	12561244
308.	2-A11	0.206	COVER, ENG FRT (INCL 304, 307) (INCLS CVR, SEAL, GSKT, BOLT)	99-02	F (LS1)	1	12561243
309.	2-A11	0.206	BOLT, ENG FRT CVR (HEX M8X1.25X30, 23.85 THD, 10.9, PZ GM7114M, MACH) (8.900)	99-02	F (LS1)	8	12551187
310.	2-B12	1.079	GASKET, W/PMP (ALSO PART OF 312)	99-02	F (LS1)	1	12559271
312.	2-B12	1.069	PUMP KIT, WAT (INCLS 310, 316, 335) (AC-DELCO #251-615)	99-02	F (LS1)	1	12458934
313.	2-N8	3.682	SENSOR, ENG COOL TEMP (AC-DELCO #213-794)	99-00	F (LS1)	1	15369305
	2-N8	3.682	SENSOR, ENG COOL TEMP (AC-DELCO #213-953)	01	F (LS1 MM6, M30)	1	15326388
	2-B14	1.150	SENSOR, ENG COOL TEMP (3.682) (AC-DELCO #213-953)	01	F (LS1, MM6, M30)	1	15326388
	2-N8	3.682	SENSOR, ENG COOL TEMP (AC-DELCO #213-953)	02	F (LS1)	1	15326388

cardiagn.com

	2-B14	1.150	CONNECTOR, SEN-ENG COOL TEMP (BLACK) (2-WAY F W/LEADS) (2.383) (AC-DELCO #PT169)	99-02	F (LS1)	1	12101899
	2-B14	1.150	CONNECTOR, SEN-ENG COOL TEMP (BLACK) (2-WAY F W/LEADS) (2.383) (AC-DELCO #PT169)	99-02	F (LS1)	1	12101899
315.	2-B12	1.079	BOLT, W/PMP (USED W/SEALANT) (M8X1.25X82.6, 31.8 THD, 17 OD, 10.9, GM7114M MZF)	99-01	F (LS1)	6	12551926
	2-B12	1.079	BOLT, W/PMP (USED W/SEALANT) (M8X1.25X82.6, 31.8 THD, 17 OD, 10.9, GM7114M MZF)	02	F (LS1)	6	12551926
316.		N.S.	COVER, W/PMP (BACKPLATE) (PART OF 312)	99-01	F (LS1)	1	
		N.S.	COVER, W/PMP (BACKPLATE)	02	F (LS1)	1	
319.		N.S.	THERMOSTAT, ENG COOL (INCL 312, 321)				
320.	2-B13	1.123	SEAL, W/PMP (ALSO PART OF #319)	99-02	F (LS1)	1	12561153
321.	2-B12	1.073	INLET, W/PMP (INCLS 319, 322) (INCLS INLET, THERMOSTAT, SEAL, VALVE, RET)	99-02	F (LS1)	1	12562740
322.		N.S.	VALVE, ENG COOL AIR BL (PART OF 321)				
333.	2-B13	1.123	SEAL, W/PMP CVR (O RING) (ALSO PART OF 312)	99-02	F (LS1)	1	12551905
334.		N.S.	BOLT, W/PMP CVR (PART OF 312) (M6X1X25)				
335.		N.S.	PULLEY, W/PMP (PART OF 312)				

RPO DEFINITIONS

LS1 – ENGINE GAS, 8 CYL, 5.7L, SFI, ALUMINUM ENGINE
MM6 – TRANSMISSION MAN 6 SPD, BORG WARNER, 85MM, 1ST 2.66, 6TH 0.50, O/D
M30 – TRANSMISSION,AUTOMATIC 4 SPEED,4L60E,ELECTRONIC

cardiagn.com

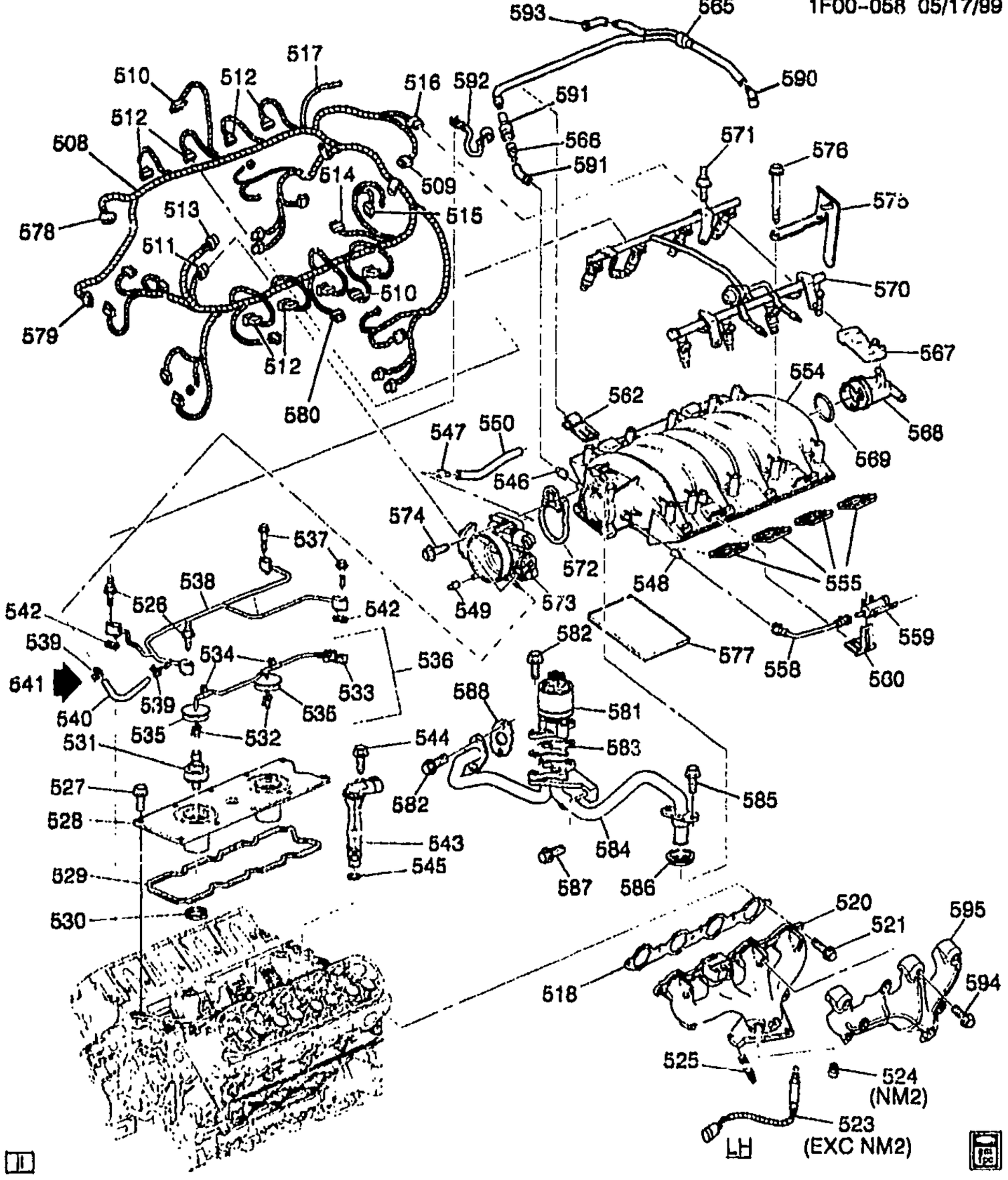

1F00-058

2000 F ENGINE ASM-5.7L V8 PART 5 MANIFOLDS AND FUEL RELATED PARTS (LS1/5.7G)

508.	2-M5	2.525	HARNESS, ENG WRG	00 F (LS1, M30)	1	12177652
	2-M5	2.525	HARNESS, ENG WRG	00 F (LS1, MM6)	1	12177653
509.	2-L14	2.383	CONNECTOR, SEN-CM/SHF POSN (TO CALLOUT 543) (BLACK) (3-WAY F) (W/LEADS) (2.535) (AC-DELCO #PT117) ...	00 F (LS1)	1	12085495

cardiagn.com

510.	2–L14	2.383	**CONNECTOR**, MDL–ELEK IGN CONT (7–WAY F, W/LEADS) (8.965) (AC–DELCO #PT381) ...	00	F (LS1)	2	12102754
511.	2–M23	3.339	**CONNECTOR**, SEN–THROT POSN (BLACK) (3–WAY F) (W/LEADS) (2.535) (AC–DELCO #PT375)	00	F (LS1)	1	12102748
512.	2–M4	2.483	**CONNECTOR**, INJR–FUEL (2–WAY F) (W/LEADS) (2.535) (AC–DELCO #PT113)	00	F (LS1)	8	12085491
513.	2–M23	3.338	**CONNECTOR**, MOT–IDLE AIR C/VLV (4–WAY F) (W/LEADS) (2.383) (AC–DELCO #PT757) ...	00	F (LS1)	1	12126487
514.	2–M8	2.530	**CONNECTOR**, INLINE–TO KNOCK SEN (BLACK) (2–WAY F W/LEADS) (3.670) (AC–DELCO #PT374)	00	F (LS1)	2	12102747
515.	2–B23	1.516	**CONNECTOR**, SEN–ENG OIL LVL (BLACK) (2–WAY F W/LEADS) (3.670) (AC–DELCO #PT374)	00	F (LS1)	2	12102747
516.	2–N8	3.682	**CONNECTOR**, SEN–MAP (GRAY) (3–WAY F)	00	F (LS1)	1	12129946
517.	2–N5	3.675	**HOSE**, MAP SEN VAC	00	F (LS1)	1	12186680
518.	2–M19	3.270	**GASKET**, EXH MANIF (*KIT1)	00	F (LS1)	2	12558573
520.	2–M24	3.601	**MANIFOLD**, EXH (INCLS 525) ..	00	F (LS1, M30, MM6)	RH	12559506
	2–M24	3.601	**MANIFOLD**, EXH (INCLS 525) ..	00	F (LS1, M30, MM6)	LH	12559507
521.		8.900	**BOLT**, HWH, M8X1.25X32, 22.9 THD, 9.8, PS (EXH MANIF)	00	F (LS1)	8	12551187
523.	2–N8	3.682	**SENSOR**, HTD OXY (POSN 1) (EXC NM8) (USE WITH CONNECTOR 580) (AC–DELCO #AFS97)	00	F (LS1)	1	25312196
524.		8.971	**PLUG–EXT**, M18X1.5X10 TAPPERED 1:16, 19 OD, 22 OAL SAE 1010/1012 (OXY SEN HOLE)	00	F (LS1)	1	25509274
525.	2–M26	3.613	**STUD**, EXH PIPE (PART OF 520) .	00	F (LS1)	6	10220453
526.	2–B13	1.097	**STUD**, ENG COOL AIR BL PIPE ..	00	F (LS1)	2	12561089
527.		8.900	**BOLT**, HWH, M8X1.25X32, 22.9 THD, 9.8, PS (ENG BLK VALLEY CVR) (PART OF 528)	00	(LS1)	10	12551187
528.	2–M19	3.265	**COVER**, ENG BLK VALLEY (INCLS 527, 529, 530)	00	F (LS1)	1	12561106
529.	2–M19	3.270	**GASKET**, ENG BLK VALLEY CVR (PART OF 528)	00	F (LS1)	1	12558178
530.	2–L14	2.383	**GROMMET**, KNOCK SEN (PART OF 528)	00	F (LS1)	2	12558177
531.	2–L14	2.383	**SENSOR**, KNOCK (W/O LOCATING TAB; 1ST DES SEE 10456222) (AC–DELCO #213–362)	00	F (LS1) (2ND DES)	2	10456603
532.	2–L14	2.383	**CONNECTOR**, SEN–KNOCK (PART OF 536) (1–WAY M, W/LEADS, HIGH TEMP) (1.150) (AC–DELCO #PT727)	00	F (LS1)	2	12126456

cardiagn.com

533.	2–M8	2.530	CONNECTOR, INLINE–TO ENG HARN (PART OF 536) (BLACK) (2–WAY M) (W/LEADS) (4.720) (AC–DELCO #PT786)	00	F (LS1)	1	12167120
534.		N.S.	CLIP, HARNESS KNOCK SENSOR JUMPER (PART OF 536	00	F (LS1)	2	
535.		N.S.	GROMMET, KNOCK SEN (PART OF 536)	00	F (LS1)	2	
536.	2–L17	2.480	WIRE, KNOCK SEN (INCLS 532, 533, 534, 535)	00	F (LS1)	1	15372170
537.		8.900	BOLT, METRIC HEX FLG HD (M6X1X30) (POR 9.8) (ENG COOL AIR BL PIPE)	00	.....	4	11514008
538.	2–B13	1.097	PIPE, ENG COOL AIR BL (INCLS 539, 541, 542)	00	F (LS1)	1	12562169
539.		8.948	CLAMP, SPRG BAND, 14.2MM, 9/16 OD HOSE, POR (ENG COOL AIR BL HOSE) (PART OF 538) ...	00	.....	2	25526358
540.	2–B13	1.097	HOSE, ENG COOL AIR BL (PART OF 538)	00	F (LS1)	1	12562165
541.		8.800	LUBRICANT, RUBBER 5 GAL 'LUBRICANT, ENG COOL AIR BL HOSE)	00	F (LS1)	AR	12345884
542.	2–B13	1.097	SEAL, ENG COOL AIR BL PIPE (O RING) (PART OF 538)	00	F (LS1)	4	12551933
543.	2–L14	2.383	SENSOR, CM/SHF POSN (INCL 545) (USE WITH 509 CONNECTOR) (AC–DELCO #213–363)	00	F (LS1)	1	12561211
544.		8.900	BOLT, HFH, M8X1.25X20, 17THD, 18OD (CR/SHF POSN SEN)	00	.....	1	11515756
545.		N.S.	SEAL, CM/SHF POSN SEN HOLE PLUG (O RING) (PART OF 543) ..	00	F (LS1)	1	
546.		N.S.	CONNECTOR, PCV CR/CASE VENT (PART OF 554		F	1	
547.		N.S.	CONNECTOR, PCV FRESH AIR TO CR/CASE (PART OF 573		F	1	
548.		N.S	CONNECTOR, PURCE PORT (PART OF 554		F	1	
549.		N.S.	CONNECTOR, VAPOR VENT TUBE (PART OF 573		F	1	
550.	2–C3	1.762	TUBE, PCV (FROM RIGHT SIDE ROCKER ARM COVER (VALVE COVER) CONNECTOR TO THROTTLE BODY)	00	F (LS1)	1	12556454
554.	2–M19	3.265	MANIFOLD, INT (SERV) (SEE GROUP 3.000 "FUEL RAIL, INTAKE MANIFOLD, THROTTLE BODY "FOR DETAIL ILLUSTRATED VIEW.) (INCLS 546, 548, 568, 569)	00	F (LS1)	1	12561269
555.	2–M19	3.270	GASKET KIT, INT MANIF (CONTAINS 8 GASKETS)	00	F (LS1)	1	12533587
558.	2–M17	3.145	TUBE, EVAP EMIS CNSTR PURGE (FROM VALVE TO THROTTLE BODY)	00	F (LS1)	1	12552222

cardiagn.com

559.	2-M16	3.130	**VALVE**, EVAP EMIS CNSTR PURGE SOL (AC-DELCO #214-641)	00	F (LS1)	1	1997276
560.	2-M16	3.130	**BRACKET**, EVAP EMIS CNSTR PURGE SOL VLV	00	F (LS1)	1	12560884
562.	2-C3	1.762	**RETAINER**, PCV VLV PIPE	00	F (LS1)	2	12557340
565.	2-C3	1.762	**PIPE**, PCV VLV (INCLS 566, 590, 591, 592)	00	F (LS1)	1	12562580
566.		N.S.	**VALVE**, PCV (PART OF 565)				
567.	2-N8	3.682	**SENSOR**, MAP (W/SEAL) (AC-DELCO #213-331)	00	F (LS1)	1	16212460
	2-N8	3.682	**CONNECTOR**, SEN-MAP (GRAY) (3-WAY F)	00	F (LS1)	1	12129946
568.		N.S.	**PLUG**, MAP SEN HOLE (PART OF 554)				
569.		N.S.	**SEAL**, MAP SEN HOLE PLUG (O RING) (PART OF 554)				
570.	2-M21	3.330	**RAIL**, SEQ M/PORT F/INJN FUEL (SEE GROUP 3.000 "RAIL" FOR DETAIL ILLUSTRATED VIEW.) (AC-DELCO #217-1401)	00	F (LS1)	1	12562815
571.	2-M21	3.330	**STUD**, F/INJN FUEL RL (HFH 6X1X18.5X14 W/ADH, 6X1X14, 39.1 OAL, 14.2 OD, 9.8, 7114M) (AC-DELCO #12554211)	00	F (LS1)	4	12554211
572.	2-M22	3.336	**SEAL**, THROT BODY	00	F (LS1)	1	12552542
573.	2-M21	3.335	**BODY**, THROT (SEE GROUP 3.000 "BODY, THROT"FOR DETAIL ILLUSTRATED VIEW. (INCLS 547, 549) (AC-DELCO #17113647)	00	F (LS1)	1	17113647
	2-M23	3.338	**CONNECTOR**, MOT-IDLE AIR C/VLV (4-WAY F) (W/LEADS) (2.383) (AC-DELCO #PT757)	00	F (LS1)	1	12126487
	2-M23	3.339	**CONNECTOR**, SEN-THROT POSN (BLACK) (3-WAY F) (W/LEADS) (2.535) (AC-DELCO #PT375)	00	F (LS1)	1	12102748
574.		8.900	**BOLT**, METRIC HEX FLG HD (M6X1X30) (POR 9.8) (THROT BODY)	00		3	11514008
575.	2-M21	3.330	**BRACKET**, F/INJN FUEL RL	00	F (LS1)	LH	12556074
576.	2-M19	3.275	**BOLT**, INT MANIF (W/FLAT WASHER) (M6X1.0X21.8, 13.6 OD, GM500M, ZF, MACH, ADHES)	00	F (LS1)	10	12552344
577.	2-M19	3.270	**SEAL**, INT MANIF	00	F (LS1)	2	12560251
578.	2-M26	3.670	**CONNECTOR**, SOL-EGR VLV (5-WAY F) (W/LEADS) (AC-DELCO #PT747)	00	F (LS1)	1	12126477
579.	2-N28	9.186	**CONNECTOR**, COIL-A/C CLU (OVAL) (2-WAY F) (W/LEADS) (2.535) (AC-DELCO #PT209)	00	F (LS1)	1	12101937
580.	2-N8	3.682	**CONNECTOR**, INLINE-TO OXY SEN (TO CALLOUT 523) (4-WAY M) (W/LEADS) (2.530) (AC-DELCO #PT919)	00	F (LS1)	4	15305801

cardiagn.com

	2-N8	3.682	CONNECTOR, INLINE-TO OXY SEN (TO CALLOUT 523) (2-WAY) (W/O LEADS) (2.559) ..	00	F (LS1, NM2)	4	12191286
581.	2-M26	3.670	VALVE, EGR (PROD 17200257) (AC-DELCO #214-1041)	00	F (LS1)	1	17113614
582.		8.900	BOLT-HFH, M8X1.25X40, 22 THD, 18 OD, 10.9, 7112M, MACH (EGR VLV PIPE)	00	.....	AR	11515792
583.	2-N8	3.680	GASKET, EGR VLV (AC-DELCO #219-230)	00	F (LS1)	1	12558353
584.	2-N5	3.675	PIPE, EGR VLV	00	F (LS1)	1	12559425
585.		8.900	BOLT-HFH, M8X1.25X40, 22 THD, 18 OD, 10.9, 7112M, MACH (EGR VLV PIPE)	00	.....	AR	11515792
586.	2-N8	3.680	SEAL, EGR VLV PIPE (O RING) (AC-DELCO #219-235)	00	F (LS1)	1	12557932
587.		8.900	BOLT, M10X1.5X30, 10.9, 7114M, 22 OD, HDR PT (EGR VAC REG VLV BRKT)	00	.....	2	11516328
588.	2-N8	3.680	GASKET, EGR VLV PIPE (AC-DELCO #219-229)	00	F (LS1)	1	12553047
590.		N.S.	ELBOW, PCV VLV (PART OF 565)		.....		
591.		N.S.	PIPE, PCV VLV (PART OF 565) ...		.....		
592.		N.S.	STRAP, PCV HARN (PART OF 565)		.....		
593.		N.S.	ELBOW, PCV VLV (PART OF 565)		.....		
594.	2-M25	3.602	BOLT, EXH MANIF H/SHLD (M6X12)	00	F (LS1)	6	10228350
595.	2-M25	3.602	SHIELD, EXH MANIF HT	00	F (LS1)	LH	12562935
	2-M25	3.602	SHIELD, EXH MANIF HT	00	F (LS1)	RH	12362936

SERVICE KITS

1.	2-A12	0.289	GASKET KIT, CYL HD (REF TO CATLG GRP NOTE #1) (INCLS KIT CONTAINS: GASKETS FOR CYLINDER HEAD, INTAKE AND EXHAUST MANIFOLDS, SEAL-ENG COOL AIR BL PIPE (0-RING)	00	F (LS1)	1	12453264

RPO DEFINITIONS

LS1 – ENGINE GAS, 8 CYL, 5.7L, SFI, ALUMINUM ENGINE
MM6 – TRANSMISSION MAN 5 SPD, BORG WARNER, 85MM, 1ST 2.66, 6TH 0.50, O/D
M30 – TRANSMISSION,AUTOMATIC 4 SPEED,4L60E,ELECTRONIC
NM2 – EMISSION SYSTEM EXPORT, LEADED FUEL

cardiagn.com

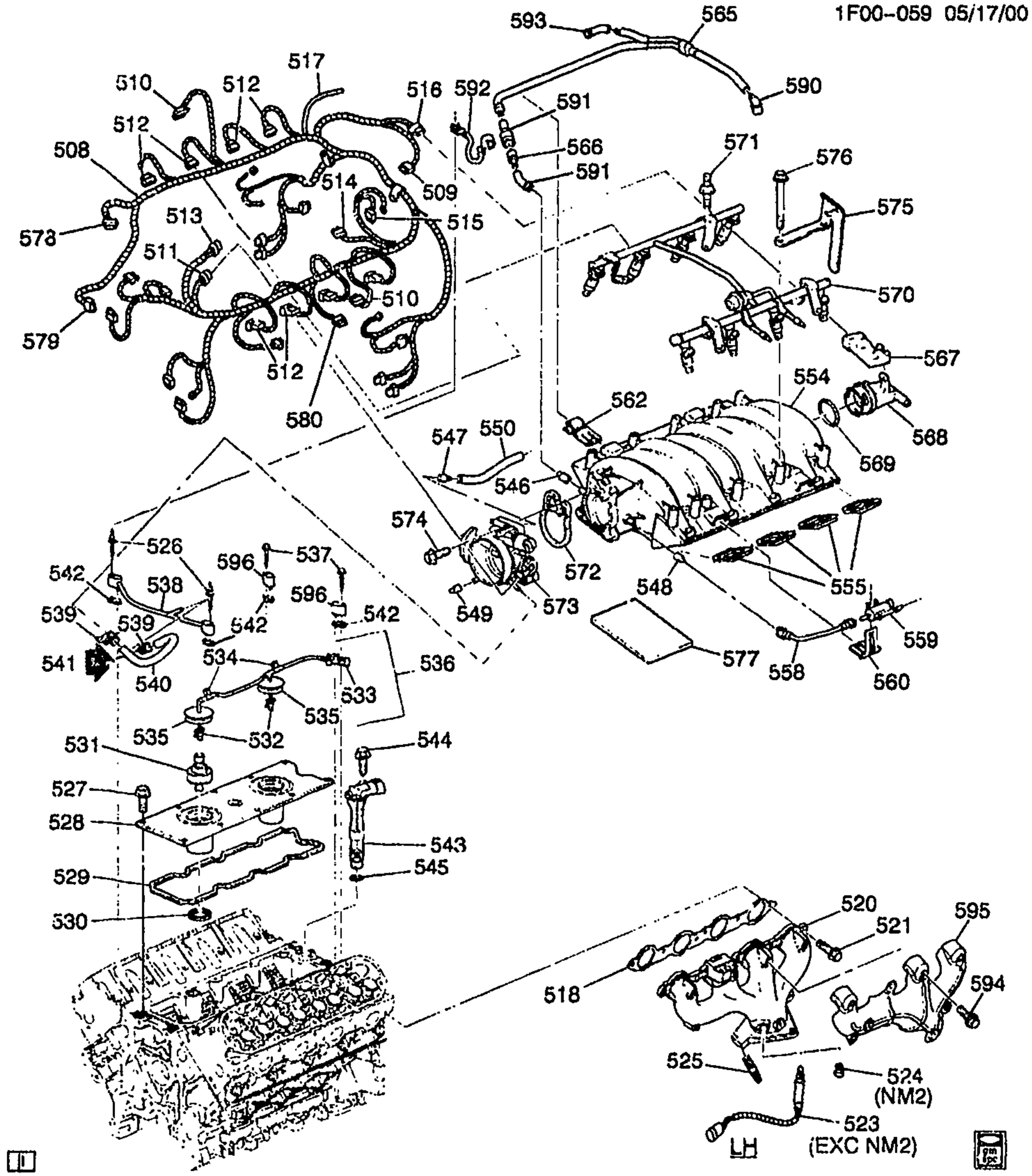

1F00-059

2001-2002 F ENGINE ASM-5.7L V8 PART 5 MANIFOLDS AND FUEL RELATED PARTS (LS1/5.7G)

508.	2-M6	2.525	HARNESS, ENG WRG	01-02	F (LS1, M30)	1	12177652
	2-M5	2.525	HARNESS, ENG WRG	01-02	F (LS1, MM6)	1	12177653
509.	2-L14	2.383	CONNECTOR, SEN-CM/SHF POSN (TO CALLOUT 543) (BLACK) (3-WAY F) (W/LEADS) (2.535) (AC-DELCO #PT117) ...	01-02	F (LS1)	1	12085495

cardiagn.com

510.	2-L14	2.383	CONNECTOR, MDL-ELEK IGN CONT (7-WAY F, W/LEADS) (8.965) (AC-DELCO #PT381) ...	01	F (LS1)	2	12102754
	2-L14	2.383	CONNECTOR, MDL-ELEK IGN CONT (7-WAY F, W/LEADS) (8.965) (AC-DELCO #PT381) ...	02	F (LS1)	2	12102754
511.	2-M23	3.339	CONNECTOR, SEN-THROT POSN (BLACK) (3-WAY F) (W/LEADS) (2.535) (AC-DELCO #PT375)	01-02	F (LS1)	1	12102748
512.	2-M4	2.483	CONNECTOR, INJR-FUEL (2-WAY F) (W/LEADS) (2.535) (AC-DELCO #PT113)	01-02	F (LS1)	8	12085481
513.	2-M23	3.338	CONNECTOR, MOT-IDLE AIR C/VLV (4-WAY F) (W/LEADS) (2.383) (AC-DELCO #PT757) ...	01-02	F (LS1)	1	12128487
514.	2-M8	2.530	CONNECTOR, INLINE-TO KNOCK SEN (BLACK) (2-WAY F W/LEADS) (3.670) (AC-DELCO #PT374)	01-02	F (LS1)	2	12102747
515.	2-B23	1.516	CONNECTOR, SEN-ENG OIL LVL (BLACK) (2-WAY F W/LEADS) (3.670) (AC-DELCO #PT374)	01-02	F (LS1)	2	12102747
516.	2-N8	3.682	CONNECTOR, SEN-MAP (GRAY) (3-WAY F)	01-02	F (LS1)	1	12129946
517.	2-N5	3.675	HOSE, MAP SEN VAC	01-02	F (LS1)	1	12186680
518.	2-M19	3.270	GASKET, EXH MANIF (*KIT1)	01-02	F (LS1)	2	12558573
520.	2-M24	3.601	MANIFOLD, EXH (INCLS 525) ..	01-02	F (LS1)	RH	12567706
	2-M24	3.601	MANIFOLD, EXH (INCLS 525) ..	01	F (LS1)	LH	12559507
	2-M24	3.601	MANIFOLD, EXH (INCLS 525) ..	02	F (LS1)	LH	12559507
521.		8.900	BOLT, HWH, M8X1.25X32, 22.9 THD, 9.8, PS (EXH MANIF)	01-02	F (LS1)	8	12551187
523.	2-N8	3.682	SENSOR, HTD OXY (POSN 1) (AC-DELCO #AFS97)	01	F (LS1)	RH	25312196
	2-N8	3.682	SENSOR, HTD OXY (POSN 1) (AC-DELCO #AFS97)	02	F (LS1)	RH	25312196
	2-N8	3.682	SENSOR, HTD OXY (POSN 1) (AC-DELCO #AFS98)	01	F (LS1)	RH	25312197
	2-N8	3.682	SENSOR, HTD OXY (POSN 1) (AC-DELCO #AFS98)	02	F (LS1)	RH	25312197
524.		8.971	PLUG-EXT, M18X1.5X10 TAPPERED 1:16, 19 OD, 22 OAL, SAE 1010/1012 (OXY SEN HOLE)	01-02	F (LS1)	1	25509274
525.	2-M26	3.613	STUD, EXH PIPE (PART OF 520) .	01	F (LS1)	6	10220453
		8.981	STUD, STRAIGHT, M10X1.5X14.5, M10X1.5X31, 56 TL, 9.8, PL (STUD, EXH PIPE) (PART OF 520)	02	.....	AR	11518424
526.	2-B13	1.097	STUD, ENG COOL AIR BL PIPE ..	01-02	F (LS1)	2	12561089
527.		8.900	BOLT, HWH, M8X1.25X32, 22.9 THD, 9.8, PS (ENG BLK VALLEY CVR) (PART OF 528)	01-02	(LS1)	10	12551187
528.	2-M19	3.265	COVER, ENG BLK VALLEY (INCLS 527, 529, 530)	01-02	F (LS1)	1	12561106
529.	2-M19	3.270	GASKET, ENG BLK VALLEY CVR (PART OF 528)	01-02	F (LS1)	1	12558178
530.	2-L14	2.383	GROMMET, KNOCK SEN (PART OF 528)	01-02	F (LS1)	2	12558177

cardiagn.com

531.	2-L14	2.383	SENSOR, KNOCK (W/O LOCATING TAB; 1ST DES SEE 10456222) (AC-DELCO #213-362)	01-02	F (LS1) (2ND DES)	2	10456603
532.	2-L14	2.383	CONNECTOR, SEN-KNOCK (PART OF 536) (1-WAY M, W/LEADS, HIGH TEMP) (1.150) (AC-DELCO #PT727)	01-02	F (LS1)	2	12126456
533.	2-M8	2.530	CONNECTOR, INLINE-TO ENG HARN (PART OF 536) (BLACK) (2-WAY M) (W/LEADS) (4.720) (AC-DELCO #PT786)	01	F (LS1)	1	12167120
	2-M8	2.530	CONNECTOR, INLINE-TO ENG HARN (PART OF 536) (BLACK) (2-WAY M) (W/LEADS) (4.720) (AC-DELCO #PT786)	02	F (LS1)	1	12167120
534.		N.S.	CLIP, HARNESS KNOCK SENSOR JUMPER (PART OF 536		(LS1)	2	
535.		N.S.	GROMMET, KNOCK SEN (PART OF 536)		(LS1)	2	
536.	2-L17	2.480	WIRE, KNOCK SEN (INCLS 532, 533, 534, 535)	01-02	F (LS1)	1	15372170
537.		8.900	BOLT, METRIC HEX FLG HD (M6X1X30) (POR 9.8) (ENG COOL AIR BL PIPE)	01-02		4	11514008
538.	2-B13	1.097	PIPE, ENG COOL AIR BL (INCLS 539, 541, 542)	01-02	F (LS1)	1	12568478
539.		8.948	CLAMP, SPRG BAND, 14.2MM, 9/16 OD HOSE, POR (ENG COOL AIR BL HOSE) (PART OF 538)	01-02		2	25526358
540.	2-B13	1.097	HOSE, ENG COOL AIR BL (PART OF 538)	01-02	F (LS1)	1	12568476
541.		8.800	LUBRICANT, RUBBER 5 GAL (LUBRICANT, ENG COOL AIR BL HOSE)	01-02	(LS1)	AR	12345884
542.	2-B13	1.097	SEAL, ENG COOL AIR BL PIPE (O RING) (PART OF 538)	01-02	F (LS1)	4	12551933
543.	2-L14	2.383	SENSOR, CM/SHF POSN (INCL 545) (USE WITH 509 CONNECTOR) (AC-DELCO #213-363)	01-02	F (LS1)	1	12561211
544.		8.900	BOLT, HFH, M8X1.25X20, 17THD, 18OD (CR/SHF POSN SEN)	01-02		1	11515756
545.		N.S.	SEAL, CM/SHF POSN SEN HOLE PLUG (O RING) (PART OF 543)		F (LS1)	1	
546.		N.S.	CONNECTOR, PCV CR/CASE VENT (PART OF 554		F (LS1)	1	
547.		N.S.	CONNECTOR, PCV FRESH AIR TO CR/CASE (PART OF 573		F (LS1)	1	
548.		N.S.	CONNECTOR, PURGE PORT (PART OF 554		F (LS1)	1	
549.		N.S.	CONNECTOR, VAPOR VENT TUBE (PART OF 573		F (LS1)	1	
550.	2-C3	1.762	TUBE, PCV (FROM RIGHT SIDE ROCKER ARM COVER (VALVE COVER) CONNECTOR TO THROTTLE BODY)	01-02	F (LS1)	1	12556454

cardiagn.com

554.	2-M19	3.265	MANIFOLD, INT (SERV) (INCLS MANIF, SEALS, GASKET, PLUG, SENSOR) (SEE GROUP 3.000 "FUEL RAIL, INTAKE MANIFOLD, THROTTLE BODY "FOR DETAIL ILLUSTRATED VIEW.) (INCLS 546, 548, 568, 569)	01-02	F (LS1)	1	88890523
555.	2-M19	3.270	GASKET KIT, INT MANIF (CONTAINS 8 GASKETS)	01-02	F (LS1)	1	12533587
558.	2-M17	3.145	TUBE, EVAP EMIS CNSTR PURGE (FROM VALVE TO THROTTLE BODY)	01	F (LS1)	1	12552222
559.	2-M16	3.130	VALVE, EVAP EMIS CNSTR PURGE SOL (AC-DELCO #214-641)	01-02	F (LS1)	1	1997278
560.	2-M16	3.130	BRACKET, EVAP EMIS CNSTR PURGE SOL VLV	01-02	F (LS1)	1	12560884
562.	2-C3	1.762	RETAINER, PCV VLV PIPE	01-02	F (LS1)	2	12557340
565.	2-C3	1.762	PIPE, PCV VLV (INCLS 566, 590, 591, 592)	01-02	F (LS1)	1	12562580
566.		N.S.	VALVE, PCV (PART OF 565)		.....		
567.	2-N8	3.682	SENSOR, MAP (W/SEAL) (AC-DELCO #213-331)	01-02	F (LS1)	1	16212460
	2-N8	3.682	CONNECTOR, SEN-MAP (GRAY) (3-WAY F)	01-02	F (LS1)	1	12129946
568.		N.S.	PLUG, MAP SEN HOLE (PART OF 554)		.....		
569.		N.S.	SEAL, MAP SEN HOLE PLUG (O RING) (PART OF 554)		.....		
570.	2-M21	3.330	RAIL, SEQ M/PORT F/INJN FUEL (SEE GROUP 3.000 "RAIL" FOR DETAIL ILLUSTRATED VIEW.) (AC-DELCO #217-1401)	01-02	F (LS1)	1	12562815
571.	2-M21	3.330	STUD, F/INJN FUEL RL (HFH 6X1X18.5X14 W/ADH, 6X1X14, 39.1 OAL, 14.2 OD, 9.8, 7114M) (AC-DELCO #12554211)	01	F (LS1)	4	12554211
	2-M21	3.330	STUD, F/INJN FUEL RL (HFH 6X1X18.5X14 W/ADH, 6X1X14, 39.1 OAL, 14.2 OD, 9.8, 7114M) (AC-DELCO #12554211)	02	F (LS1)	4	12554211
572.	2-M22	3.336	SEAL, THROT BODY	01-02	F (LS1)	1	12552542
573.	2-M21	3.336	BODY, THROT (SEE GROUP 3.000 "BODY, THROT"FOR DETAIL ILLUSTRATED VIEW. (INCLS 547, 549) (AC-DELCO #17113647)	01-02	F (LS1)	1	17113647
	2-M23	3.338	CONNECTOR, MOT-IDLE AIR C/VLV (4-WAY F) (W/LEADS) (2.383) (AC-DELCO #PT757) ...	01-02	F (LS1)	1	12126487
	2-M23	3.339	CONNECTOR, SEN-THROT POSN (BLACK) (3-WAY F) (W/LEADS) (2.535) (AC-DELCO #PT375)	01-02	F (LS1)	1	12102748
574.		8.900	BOLT, METRIC HEX FLG HD (M6X1X30) (POR 9.8) (THROT BODY)	01-02	.....	3	11514008
575.	2-M21	3.330	BRACKET, F/INJN FUEL RL	01-02	F (LS1)	LH	12556074

cardiagn.com

576.	2-M19	3.275	BOLT, INT MANIF (W/FLAT WASHER) (M6X1.0X21.8, 13.6 OD, GM500M, ZF, MACH, ADHES)	01-02	F (LS1)	10	12552344
577.	2-M19	3.270	SEAL, INT MANIF	01-02	F (LS1)	2	12560251
578.	2-M26	3.670	CONNECTOR, SOL-EGR VLV (5-WAY F) (W/LEADS) (AC-DELCO #PT747)	01-02	F (LS1)	1	12126477
579.	2-N28	9.186	CONNECTOR, COIL-A/C CLU (OVAL) (2-WAY F) (W/LEADS) (2.535) (AC-DELCO #PT209) ...	01-02	F (LS1)	1	12101937
580.	2-N8	3.682	CONNECTOR, INLINE-TO OXY SEN (TO CALLOUT 523) (4-WAY M) (W/LEADS) (2.530) (AC-DELCO #PT919)	01-02	F (LS1)	4	15305801
	2-N8	3.682	CONNECTOR, INLINE-TO OXY SEN (TO CALLOUT 523) (2-WAY) (W/O LEADS) (2.559) ..	01-02	F (LS1, NM2)	4	12191286
590.		N.S.	ELBOW, PCV VLV (PART OF 565)		.....		
591.		N.S.	PIPE, PCV VLV (PART OF 565) ...		.....		
592.		N.S.	STRAP, PCV HARN (PART OF 565)		.....		
593.		N.S.	ELBOW, PCV VLV (PART OF 565)		.....		
594.	2-M25	3.602	BOLT, EXH MANIF H/SHLD (M6X12)	01-02	F (LS1)	6	10228350
595.	2-M25	3.602	SHIELD, EXH MANIF HT	01-02	F (LS1)	LH	12562935
	2-M25	3.602	SHIELD, EXH MANIF HT	01-02	F (LS1)	RH	12562936
596.	2-B13	1.097	COVER, ENG COOL AIR BL PIPE HOLE	01-02	F (LS1)	2	12562788

SERVICE KITS

1.	2-A12	0.289	GASKET KIT, CYL HD (REF TO CATLG GRP NOTE #1) (INCLS KIT CONTAINS: GASKETS FOR CYLINDER HEAD, INTAKE AND EXHAUST MANIFOLDS, SEAL-ENG COOL AIR BL PIPE (O-RING)	01	F (LS1)	1	12453264

RPO DEFINITIONS
LS1 - ENGINE GAS, 8 CYL, 5.7L, SFI, ALUMINUM ENGINE
MM6 - TRANSMISSION MAN 6 SPD, BORG WARNER, 85MM, 1ST 2.66, 6TH 0.50, O/D
M30 - TRANSMISSION,AUTOMATIC 4 SPEED,4L60E,ELECTRONIC
NM2 - EMISSION SYSTEM EXPORT, LEADED FUEL

cardiagn.com

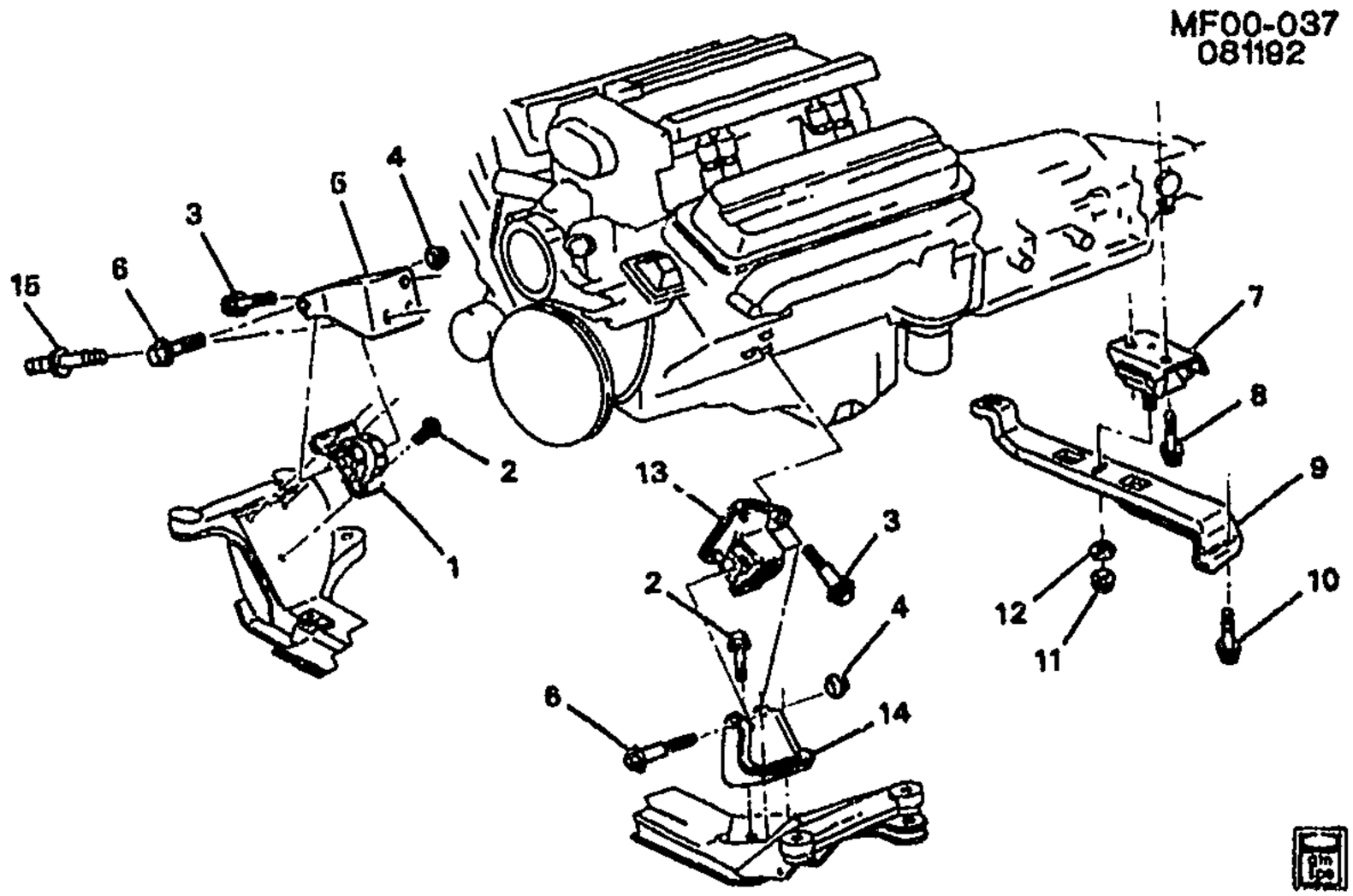

MF00-037

1993–1997 F ENGINE & TRANSMISSION MOUNTING–V8 (LT1/5.7P)

1.	2–A9	0.027	MOUNT, ENG	93–97	F (LT1)	RH	22188293
2.	2–A8	0.002	BOLT, ENG MT (HEX W/CON WA–10X1.5X25) (6.525)	93–97	F (LT1)	6	1638817
3.		8.900	BOLT, HFH 3/8–16X3/4 PZOR 7114M (ENG MT BRKT)	93–97		5	9442963
4.	2–A8	0.002	NUT, ENG MT (M12X1.75X14 (10), ZO, FLANGED) (8.917)	93–97	F (LT1)	2	11515744
	2–A8	0.002	NUT, ENG MT (M12X1.75X14 (10), ZO, FLANGED) (8.917)	94–97	F	2	11515744
5.	2–A9	0.029	BRACKET, ENG MT	93–97	F (LT1)	RH	10198334
6.	2–A8	0.002	BOLT, ENG MT (HFH, M12X1.75X150, 45 THD, 24.7 OD, 10.9, PO)	93–97	F (LT1)	2	11515459
7.	2–N16 2–N17	4.081	MOUNT, TRANS	93	F (LT1)	1	22111702
	2–N16 2–N17	4.081	MOUNT, TRANS	94–97	F (LT1) (EXC 1LE)	1	22111702
	2–N16 2–N17	4.081	MOUNT, TRANS	94–97	F (LT1, 1LE)	1	22146231
8.	2–N18	4.085	BOLT, TRANS MT (HFH W/CON WA, M10X1.5X30, 22 THD, 10.9, 7112)	93–97	F	2	22570841
9.	2–N17	4.081	SUPPORT, TRANS	93	F (LT1, MD8)	1	10198323
	2–N17	4.081	SUPPORT, TRANS	94–97	F (LT1, M30)	1	10198323
	2–N16	4.081	SUPPORT, TRANS	94–97	F87 (MM6)	1	10198322
	2–N17	4.081	SUPPORT, TRANS	94–97	F67 (LT1, M30)	1	10198347
	2–N16	4.081	SUPPORT, TRANS	94–97	F67 (MM6)	1	10256684
10.		8.900	BOLT, HEX HD W/CONICAL WA, M10X1.5X35, MACH, 10.9, PZ7112 (TRANS SUPT)	93–97		4	11515946

cardiagn.com

11.		8.915	NUT, HFH, 10X1.5 6H THD, 21.3 OD, 9.8 THK 13 HEX DR, GRD 9, ZF (TRANS MT) (8.917)	93–97	.....	1	10255857
12.		8.929	WASHER, SPL STL (15/32 ID X 1 1/8 ODX1/8) (TRANS MT)	93–97	.....	1	3790768
13.	2–A9	0.027	MOUNT, ENG	93–97	F (LT1)	LH	22188799
	2–A9	0.027	MOUNT, ENG	93–97	F (LT1)	RH	22188293
14.	2–A9	0.029	BRACKET, ENG MT	93–97	F (LT1)	LH	10229057
15.	2–A9	0.029	STUD, ENG MT BRKT (ATTACHES NEG BAT CBL) (2.183)	93–97	F (LT1)	1	12555065

RPO DEFINITIONS

LT1 – ENGINE–GAS, 8 CYL, 5.7L(5.7P),MFI,HO
MD8 – TRANSMISSION,AUTOMATIC 4–SPEED(THM700R4/4L60)
MM6 – TRANSMISSION MAN 6 SPD, BORG WARNER, 85MM, 1ST 2.66, 6TH 0.50, O/D
M30 – TRANSMISSION,AUTOMATIC 4 SPEED,4L60E,ELECTRONIC
1LE – PERFORMANCE PACKAGE COMPONENTS

cardiagn.com

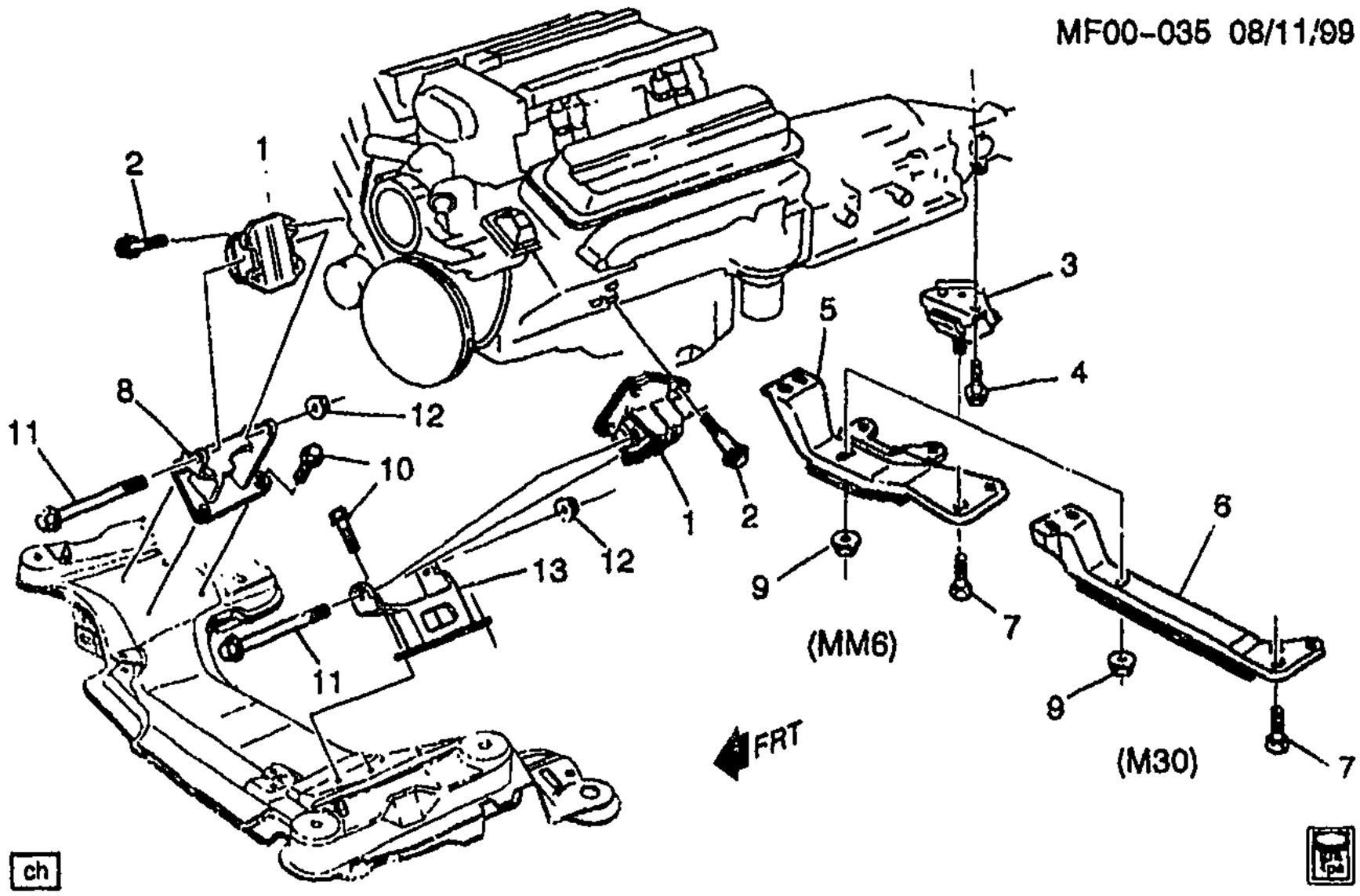

1998-2002 F ENGINE & TRANSMISSION MOUNTING-V8 (LS1/5.7G)

1.	2-A9	0.027	MOUNT, ENG	98-99	F (LS1)	2	22174868
	2-A9	0.027	MOUNT, ENG	00-02	F (LS1)	2	22179268
2.		8.900	BOLT, M10X1.5X30, 10.9, 7114M, 22 OD, HDR PT (ENG MT BRKT)	98-02		8	11516328
3.	2-N17	4.081	MOUNT, TRANS	98-02	F67 (LS1)	1	22174969
	2-N17	4.081	MOUNT, TRANS	98-99	F87 (LS1, M30) (EXC 1LE)	1	22174969
	2-N16	4.081	MOUNT, TRANS	98-02	FP87 (LS1, MM6)	1	22174970
	2-N17	4.081	MOUNT, TRANS	00-02	F87 (LS1, M30)	1	22174969
4.	2-N18	4.085	BOLT, TRANS MT (HFH W/CON WA, M10X1.5X30, 22 THD, 10.9, 7112)	98-02	F	2	22570841
5.	2-N16	4.081	SUPPORT, TRANS	98-02	F (LS1, MM6)	1	10438098
6.	2-N17	4.081	SUPPORT, TRANS	98-02	F (LS1, M30)	1	10405540
7.		8.900	BOLT, HEX HD W/CONICAL WA, M10X1.5X35, MACH, 10.9, PZ7112 (TRANS SUPT)	98-02	F	4	11515946
8.	2-A9	0.029	BRACKET, ENG MT (TRANS MT)	98-02	F (LS1)	RH	10269731
9.	2-N18	4.085	NUT, TRANS MT	98-02	F (LS1)	1	10406946
10.	2-A8	0.002	BOLT, ENG MT (TRANS MT) (HEX W/CON WA-10X1.5X25) (6.525)	98-02	F	6	1638817
11.		8.900	BOLT, HFH M12X1.75X160 10.9 26.6-OD 7114M P-PT (TRANS MT)	98-02		2	11516940
12.		8.917	NUT, HEX FLG PREVAILING TORQ (M12X1.75X14) (ZO 10) (ENG MT)	98-02	F	2	11515744
13.	2-A9	0.029	BRACKET, ENG MT (TRANS MT)	98-02	F (LS1)	LH	10269733

cardiagn.com

RPO DEFINITIONS
LS1 – ENGINE GAS, 8 CYL, 5.7L, SFI, ALUMINUM ENGINE
MM6 – TRANSMISSION MAN 6 SPD, BORG WARNER, 85MM, 1ST 2.66, 6TH 0.50, O/D
M30 – TRANSMISSION,AUTOMATIC 4 SPEED,4L60E,ELECTRONIC
1LE – PERFORMANCE PACKAGE COMPONENTS

cardiagn.com

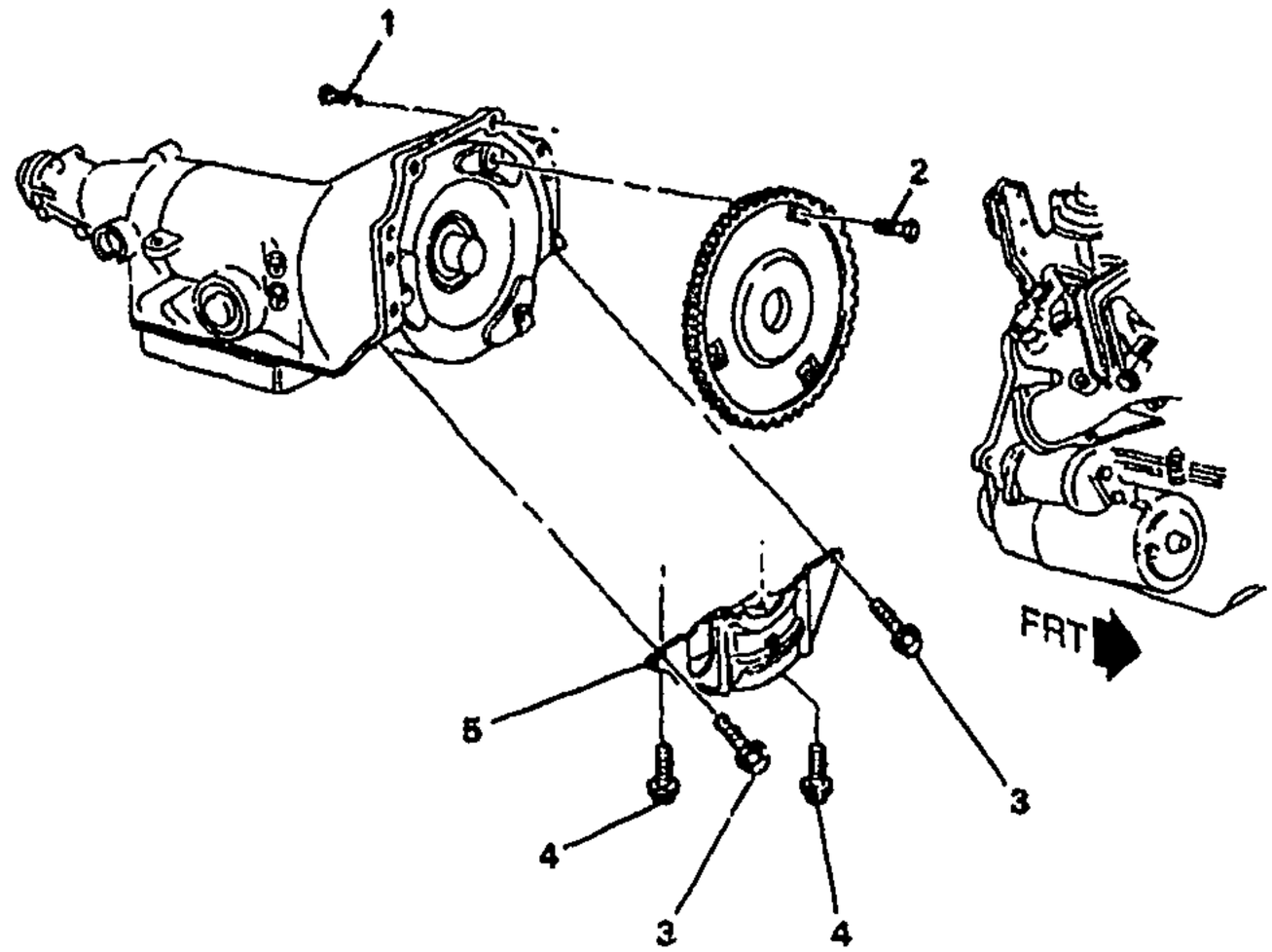

1k

MF00-038

1993 F COVER/TRANSMISSION CONVERTER (MD8)

1.	2-N17 2-N18	4.085	BOLT, TRANS (TRANS TO ENG) (TRANS) (HFH 3/8-16X1.38 280M PZOR) (8.900)	93 F (LT1, MD8)	4	9439918
2.	2-N18	4.115	BOLT, TRANS T/CV (M10X1.5X15 12.5 THD) (AC-DELCO #1261968)	93 F (MD8)	3	1261968
3.		8.900	BOLT (TRANS CONV CVR)	93 (L32, MD8)	2	11504596
		8.977	SCREW, HEX W//FLAT WA (TRANS CONV CVR)	93 (LT1, MD8)	2	12337828
4.		8.977	SCREW, HEX W/FLAT WA (TRANS CONV CVR)	93 (L32, MD8)	2	12337828
		8.977	SCREW, HEX W/FLAT WA (TRANS CONV CVR)	93 (LT1, MD8)	2	12337828
5.	2-A18	0.679	COVER, TRANS CONV	93 F (LT1, MD8)	1	10163828
	2-L7	0.679	COVER, TRANS CONV	93 F (L32, MD8)	1	14068706

RPO DEFINITIONS
LT1 - ENGINE-GAS, 8 CYL, 5.7L(5.7P),MFI,HO
L32 - ENGINE,3.4L,V6,(3.4S),SFI,OHV
MD8 - TRANSMISSION,AUTOMATIC 4-SPEED(THM700R4/4L60)

cardiagn.com

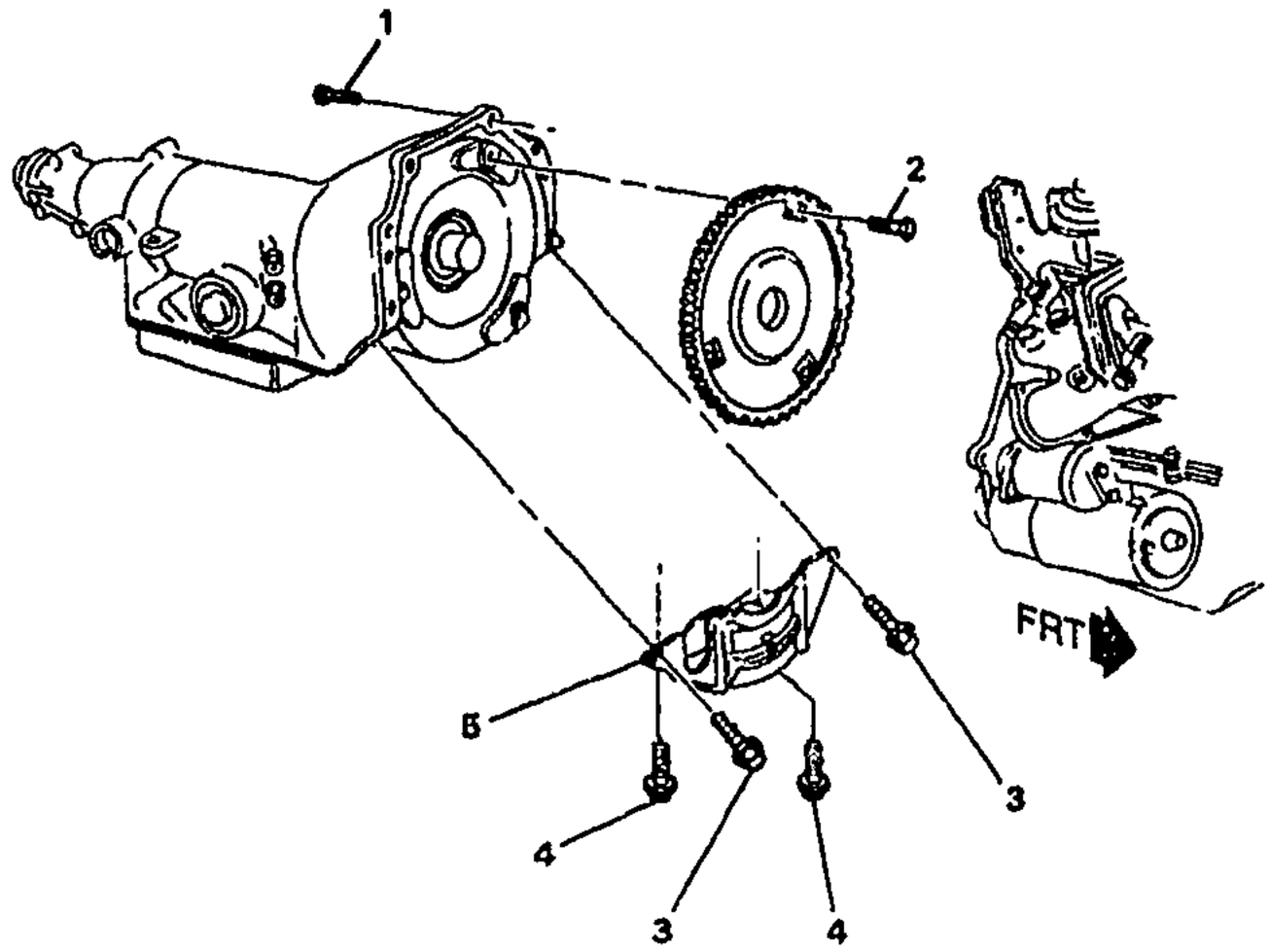

MF00-0381

1994-1995 F COVER/TRANSMISSION CONVERTER (L32,M30)
1994-1997 F COVER/TRANSMISSION CONVERTER (LT1,M30)

1.	2-N17 2-N18	4.085	BOLT, TRANS (TRANS TO ENG) (TRANS) (HFH 3/8-16X1.38 230M PZCR) (8.900)	94-97	F (LT1, M30)	4	9439918
2.	2-N18	4.115	BOLT, TRANS T/CV (M10X1.5X15 12.5 THD) (AC-DELCO #1261968)	94-97	F (M30)	3	1261968
3.		8.900	BOLT (TRANS CONV CVR)	94-95	(L32, M30)	2	11504596
		8.977	SCREW, HEX W/FLAT WA (TRANS CONV CVR)	94	(LT1, M30)	2	12337828
		8.900	BOLT (TRANS CONV CVR)	95-97	(LT1, M30)	2	11504596
4.		8.977	SCREW, HEX W/FLAT WA (TRANS CONV CVR)	94-95	(L32, M30)	2	12337828
		8.977	SCREW, HEX W/FLAT WA (TRANS CONV CVR)	94	(LT1, M30)	2	12337828
		8.900	BOLT (TRANS CONV CVR)	95-97	(LT1, M30)	2	11504596
5.	2-A18	0.679	COVER, TRANS CONV	94	F (LT1, M30)	1	10163823
	2-L7	0.679	COVER, TRANS CONV	94-95	F (L32, M30)	1	14068706
	2-A18	0.679	COVER, TRANS CONV (DUST CVR)	95	F (LT1, M30)	1	24201008
	2-A18	0.679	COVER, TRANS CONV (STEEL CVR)	96-97	F (LT1, M30)	1	12556637

RPO DEFINITIONS
LT1 - ENGINE-GAS, 8 CYL, 5.7L(5.7P),MFI,HO
L32 - ENGINE,3.4L,V6,(3.4S),SFI,OHV
M30 - TRANSMISSION,AUTOMATIC 4 SPEED,4L60E,ELECTRONIC

cardiagn.com

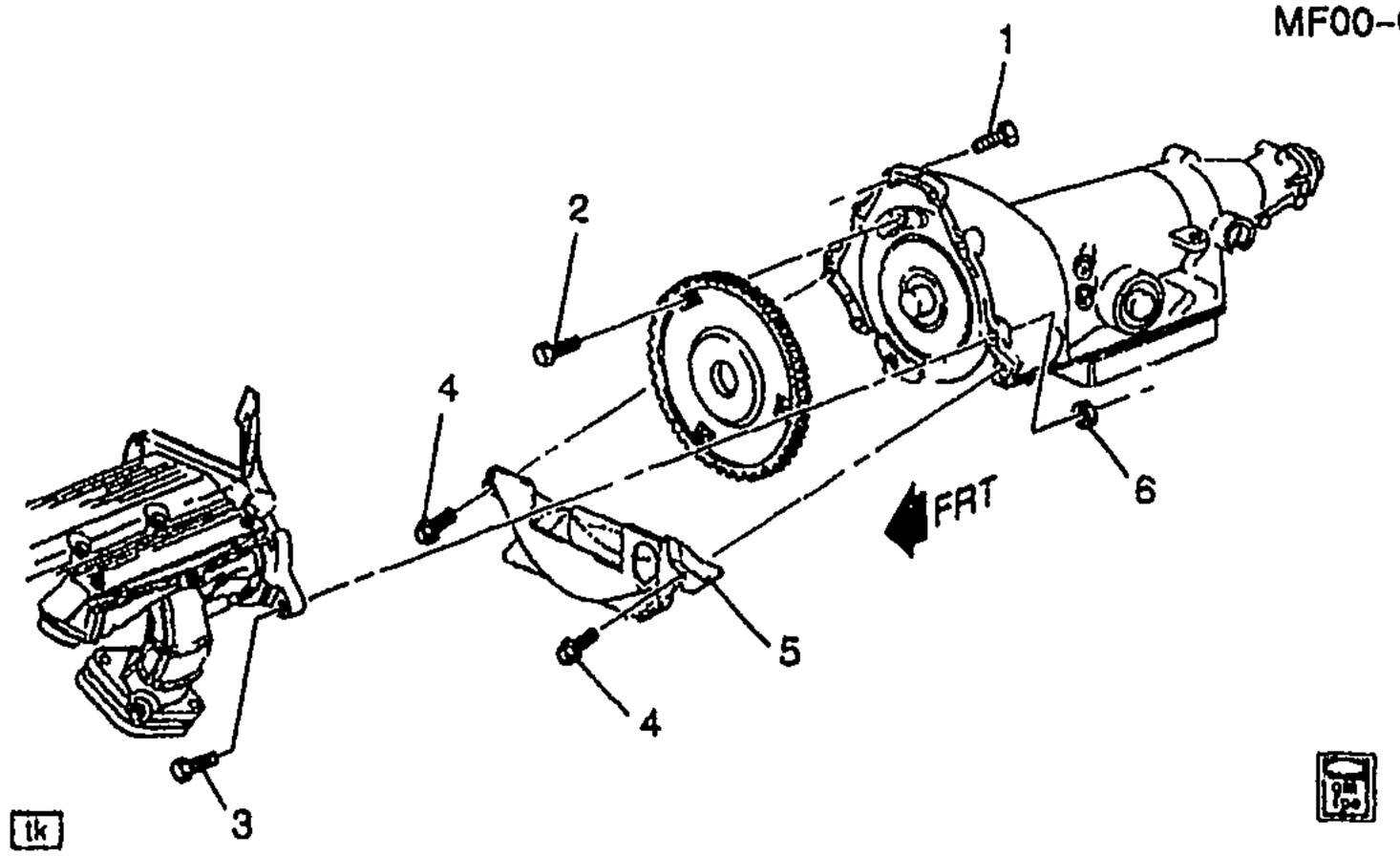

MF00-045

1995-1997 F COVER/TRANSMISSION CONVERTER (L36,M30)

1.	2-N16 2-N18	4.085	BOLT, TRANS (TRANS) (M12X1.75X45, 30 THD, 26.6 OD, 10.9) (8.900)	95-97	F	5 11515778
2.	2-N18	4.115	BOLT, TRANS T/CV (M10X1.5X15 12.5 THD) (AC-DELCO #1261968)	95-97	F (M30)	3 1261968
3.		8.900	BOLT, HFH M12X1.75X65 9.8 POR 26.6 OD DIM A-30 (TRANS)	95-97	F	1 11508580
4.		8.900	BOLT, HFH, M10X1.5X40, 26 THD, 10.9, POR (TRANS CONV CVR)	95-97	.....	5 14050422
5.	2-L7	0.679	COVER, TRANS CONV (TRANS CONV CVR)	95-97	F (L36, M30)	1 24200761
6.		8.917	NUT, HEX FLG PREVAILING TORQ (M12X1.75X14) (ZO 10) (TRANS)	95-97	F	1 11515744

RPO DEFINITIONS
L36 – ENGINE GAS, 6 CYL, 3.8K, MFI, V6, HO (ERV6 SERIES)
M30 – TRANSMISSION,AUTOMATIC 4 SPEED,4L60E,ELECTRONIC

cardiagn.com

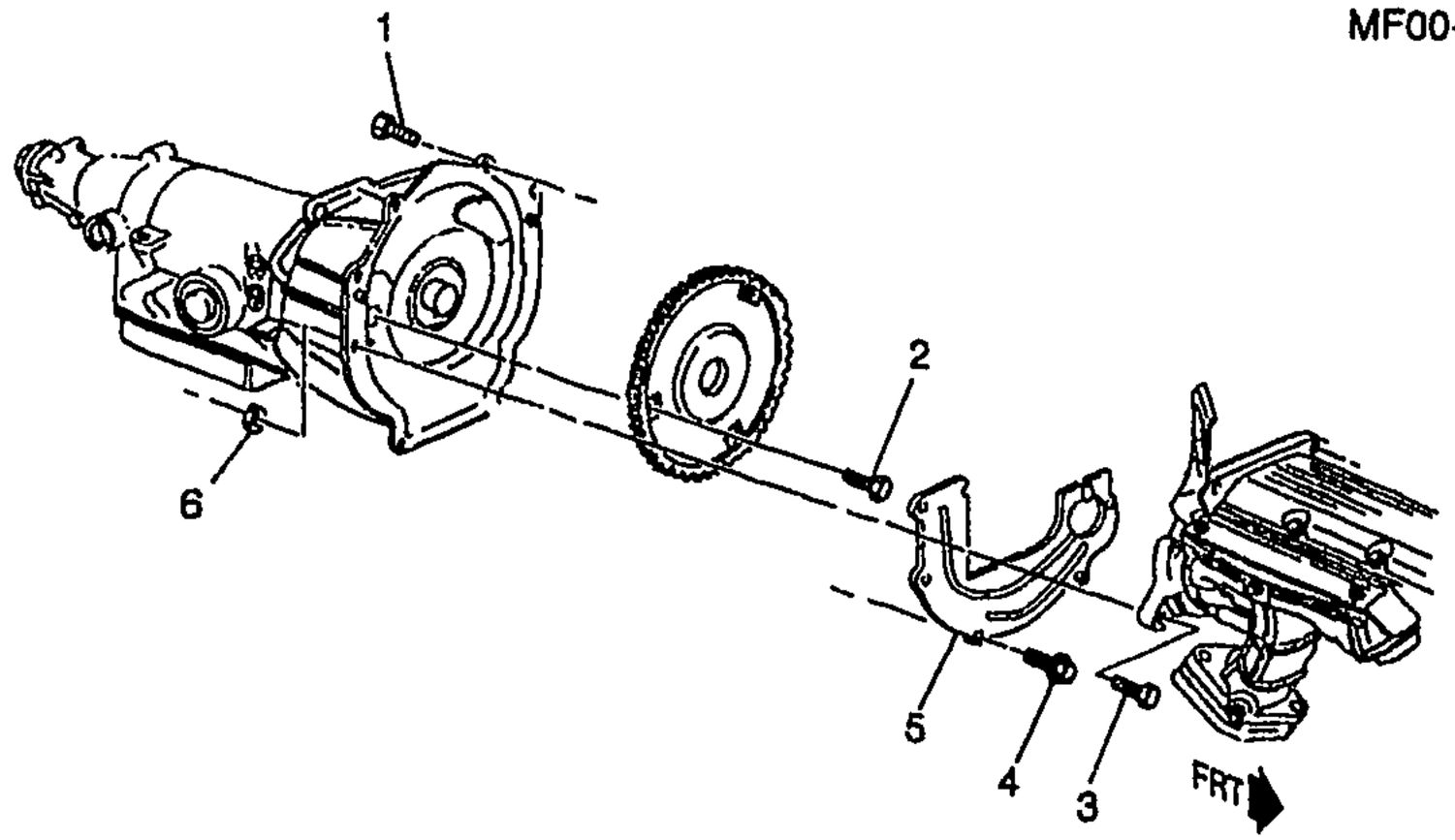

1998-2002 F COVER/TRANSMISSION CONVERTER (L36,M30)

1.	2-N16 2-N18	4.085	BOLT, TRANS (TRANS) (M12X1.75X45, 30 THD, 26.6 OD, 10.9) (8.900)	98-02	F	2	11515778
2.	2-N18	4.115	BOLT, TRANS T/CV (M10X1.5X15 12.5 THD) (AC-DELCO #1261968)	98	F (L36, M30)	3	1261968
	2-N18	4.115	BOLT, TRANS T/CV (M10X1.5X15 12.5 THD) (AC-DELCO #1261968)	99-02	F (L36, M30, M49)	3	1261968
3.		8.900	BOLT, HFH M12X1.75X65 9.8 POP 26.6 OD DIM A-30 (TRANS)	98-02	F	1	11508580
4.		8.977	SCREW, HEX W/FLAT WA (TRANS CONV CVR)	98-02	.....	5	12337928
5.	2-L7	0.679	COVER, TRANS CONV (TRANS CONV CVR)	98-02	F (L36, M30)	1	12554995
6.		8.917	NUT, HEX FLG PREVAILING TORQ (M12X1.75X14) (ZO 10) (TRANS)	98-02	F	1	11515744

RPO DEFINITIONS
L36 – ENGINE GAS, 6 CYL, 3.8K, MFI, V6, HO (ERV6 SERIES)
M30 – TRANSMISSION,AUTOMATIC 4 SPEED,4L60E,ELECTRONIC
M49 – TRANSMISSION MAN 5 SPD, BORG WARNER, 77MM, 3.75 1ST, .76 5TH, O/D

cardiagn.com

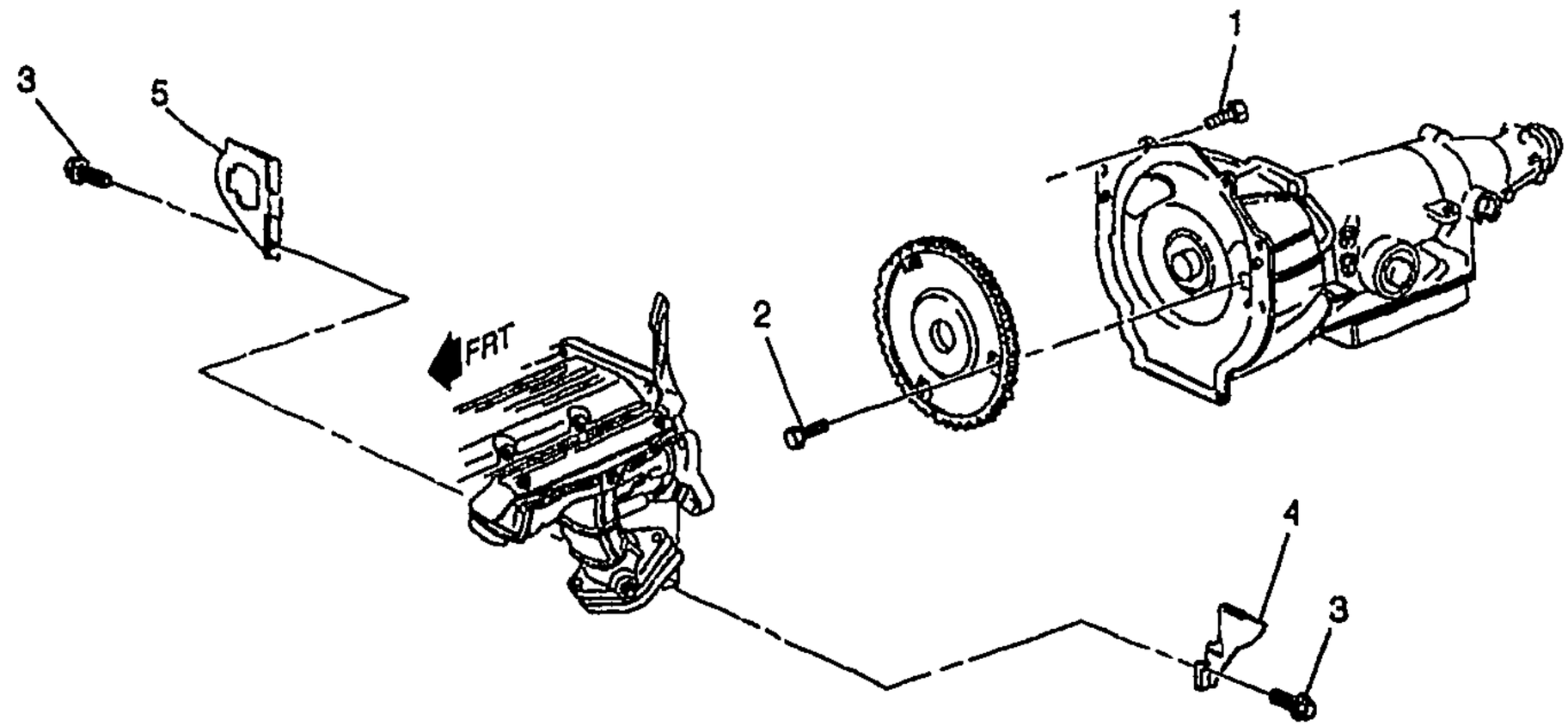

bk

MF00-055

1998-2002 F COVER/TRANSMISSION CONVERTER (LS1,M30)

1.		8.900	BOLT, HFH, M10X1.5X40, 26 THD, 10.9, POR (TRANS)	98-02	F (LS1, M30)	4	14050422
2.	2-N18	4.115	BOLT, TRANS T/CV (M10X1.5X23.0-G)	98-00	F (LS1, M30)	3	12560397
	2-N18	4.115	BOLT, TRANS T/CV (M10X1.5X22)	01-02	F (LS1, M30)	3	11519291
3.		8.900	BOLT/SCREW, HEX W/FL WA 17 OD, M6X1X20, 9.8, 4345M, DOG PT (TRANS)	98-02	F	1	11515704
4.	2-N17 2-N18	4.105	COVER, TRANS (TRANS CONV CVR) (AC-DELCO #12558718) .	98-02	F (LS1, M30)	LH	12558718
5.	2-N17 2-N18	4.105	COVER, TRANS (TRANS CONV CVR) (AC-DELCO #125615[illegible]) .	98-02	F (LS1, M30)	RH	12561536

RPO DEFINITIONS
LS1 – ENGINE GAS, 8 CYL, 5.7L, SFI, ALUMINUM ENGINE
M30 – TRANSMISSION,AUTOMATIC 4 SPEED,4L60E,ELECTRONIC

cardiagn.com

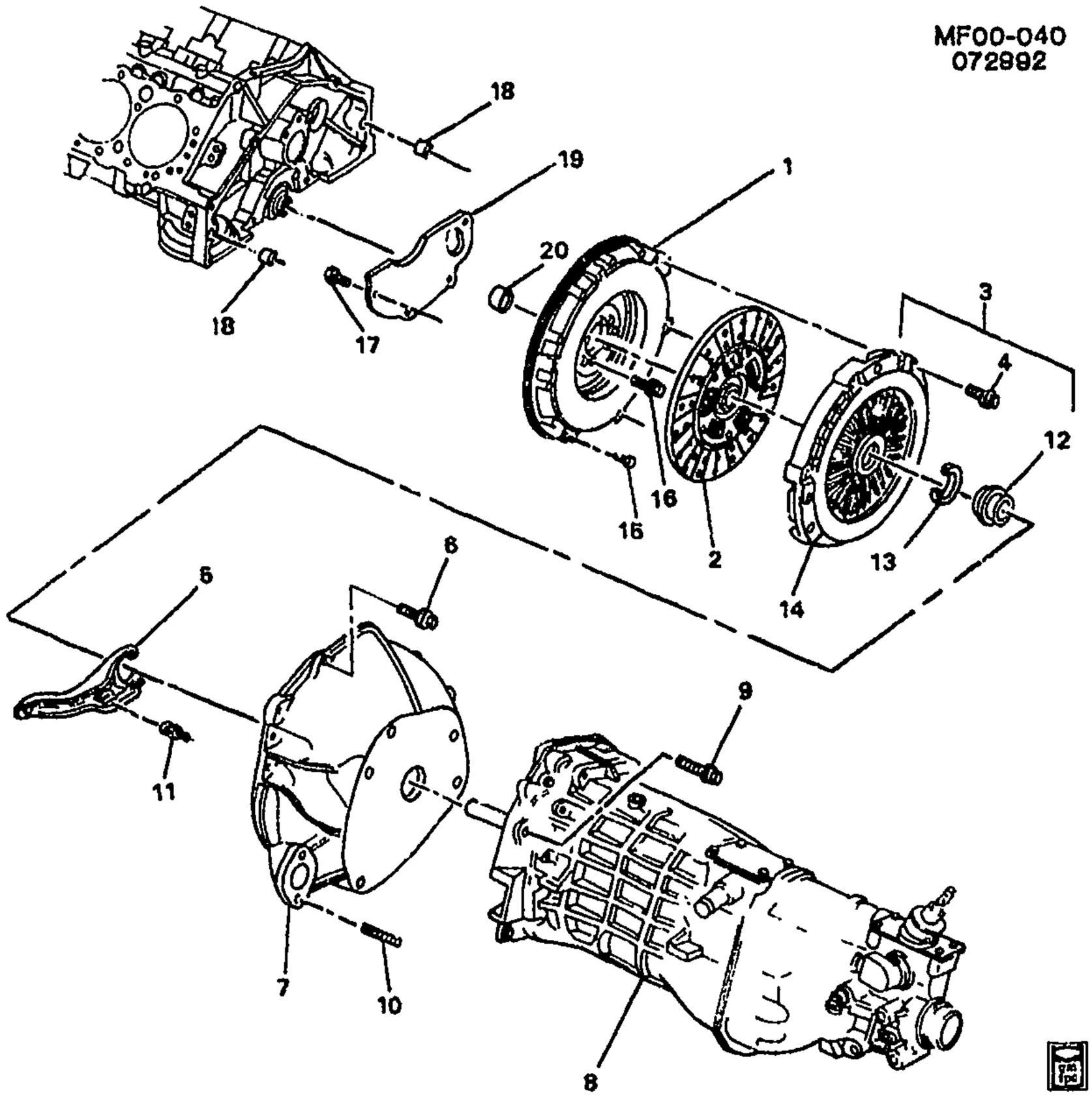

MF00-040

1993 F CLUTCH (M28,M29)

1.	2-A16	0.666	FLYWHEEL, ENG (153 TEETH) ..	93 F (LT1, M28, M29)	1	10125379
2.	2-A22	0.886	PLATE, CLU DRVN	93 F (LT1)	1	12551309
3.		N.S.	PLATE, CLU PRESS (W/CVR & CLU REL BRG)	.....		
4.	2-A21	0.862	BOLT, CLU PRESS PLT (HFH, 3/8-16X1.62, .38 THD, .378 SHD TAPERED TO .375, 280M) .	93 F (LT1, M28, M29)	6	10079898
5.	2-A20	0.795	FORK, CLU REL (PART OF 8)	93 F (M28, M29)	1	12523312
6.		8.90C	BOLT (TRANS) (3.275)	93 F	6	10198997
7.		N.S.	HOUSING, FLYWHL (PART OF 8)	.....		
8.	2-N16	4.003	TRANSMISSION, MAN (WHEN USING IN PLC OF 10142017, PROP SHF 12554450 MUST ALSO BE USED) (INCLS 5, 7, 9, 10, 11) (CODE DFH)	93 F (M28, GU2)	1	10236020

cardiagn.com

	2-N16	4.003	TRANSMISSION, MAN (WHEN USING IN PLC OF 10150060, PROP SHF 12554456 MUST ALSO BE USED) (INCLS 5, 7, 9, 10, 11)	93	F (M29, GU5)	1	10236021
9.		N.S.	BOLT, TRANS (PART OF 8)		.....		
10.		N.S.	STUD, CLU ACTR CYL (PART OF 8)		....		
11.		N.S.	STUD, CLU FORK BALL (PART OF 8)		.....		
12.	2-A20	0.799	BEARING, CLU REL	93	F (LT1, M28, M29)	1	10085246
13.	2-A20	0.799	RETAINER, CLU REL BRG COLR	93	F (LT1, M28, M29)	1	10111569
14.	2-A21	0.859	PLATE, CLU PRESS (W/CVR) ...	93	F (LT1, M28, M29)	1	10207027
15.		0.940	PIN, GROOVE/F/.312X.375 CZ; 0.375" LENGTH (FLYWHL)	93	F	AR	274584
16.	2-A17	0.669	BOLT, FLYWHL (7/16-20 X 31/32)	93	F (LT1, M28, M29)	6	12337973
17.		0.977	SCREW, HEX W/FLAT WA (FLWHL HSG CVR)	93	F	4	12337928
18.		0.939	PIN, DOWEL STRAIGHT 5/8 DIA 1 3/16 LG (FLYWHL HSG LOC) ...	93	F	2	12338119
19.	2-A18	0.679	COVER, FLYWHL HSG	93	F (LT1, M28, M29)	1	10241153
20.	2-A16	0.649	BEARING, CLU PILOT	93	F (LT1)	1	14061685

RPO DEFINITIONS

GU2 – AXLE,REAR,2.73 RATIO
GU5 - AXLE,REAR,3.23 RATIO
LT1 – ENGINE-GAS, 8 CYL, 5.7L(5.7P),MFI,HO
M28 – TRANSMISSION MAN, 6 SPD, BORG WARNER, 85MM, 3.36 1ST, 1.35 3RD
M29 – TRANSMISSION MAN, 6 SPD, BORG WARNER, 85MM, 2.97 1ST, 1.44 3RD

cardiagn.com

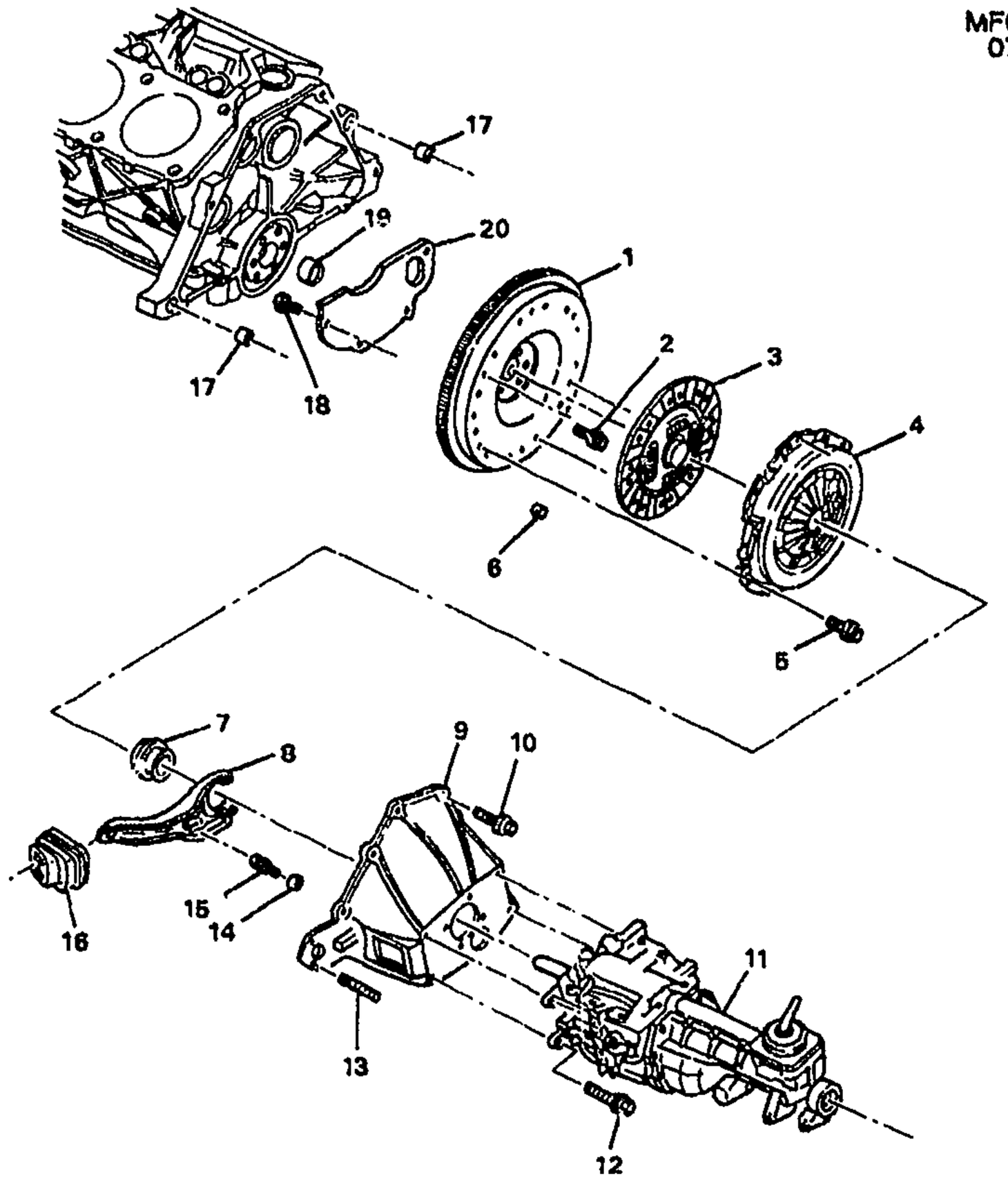

MF00-039

1993–1995 F CLUTCH (M49)

1.	2–L6	0.366	FLYWHEEL, ENG	93–95	F (L32, M49)	1	14100559
2.	2–L7	0.669	BOLT, FLYWHL (HEX, M10X1X23, 15.5 THD, 11.9, PC)	93–95	F (L32, M49)	6	476576
3.	2–L9	0.886	PLATE, CLU DRVN	94–95	F (L32, M49)	1	10235002
	2–L9	0.886	PLATE, CLU DRVN (IF USE IN PLC OF 10206756, 10235003 CLU PRESS PLT MUST ALSO BE USED)	93	F (L32, M49)	1	10235002
4.	2–L8	0.859	PLATE, CLU PRESS (W/CVR) ...	94–95	F (L32, M49)	1	10235003
	2–L8	0.859	PLATE, CLU PRESS (W/CVR) (IF USE IN PLC OF 10206758, 10235002 DRVN PLT MUST ALSO BE USED)	93	F (L32, M49)	1	10235003
5.	2–L8	0.862	BOLT, CLU PRESS PLT (M8X1.25X21.6, 19.8+HD, 10.9, PC) (8.900)	93–95	F (L32, M49)	6	24571667
6.		8.940	PIN, GROOVE/F/.312X.375 CZ; 0.375" LENGTH (FLYWHL)	93–95	.....	AR	274584

cardiagn.com

7.	2-L8	0.799	BEARING, CLU REL (AC-DELCO #CT24KVAL)	93-95	F (L32, M49)	1	15613306
8.	2-L8	0.795	FORK, CLU	93-95	F (L32, M49)	1	10192223
9.	2-L7	0.683	HOUSING, FLYWHL (INCLS 13-15)	93-95	F (L32, M49)	1	10235487
10.		8.900	BOLT, HEX, M12X1.75X45. 30 THD, 10.9, POR (FLYWHL HSG) ..	93-95	.....	6	22649722
11.	2-N15	4.003	TRANSMISSION, MAN (WHEN USING IN PLC OF 10142016, ALSO USE SPEEDO GEAR 12550928) (SEE MANUAL TRANS ILLUSTRATION IN GRP. 4.000 FOR DETAILED VIEW.)	93-95	F (M49)	1	12533893
12.	2-N16	4.085	BOLT, TRANS (M12X1.75X40) ...	93-95	F (M49)	4	14056613
13.	2-L8	0.780	STUD, CLU ACTR CYL (PART OF 9) (0.777)	93-95	F (L32, M49)	2	10150004
14.		8.931	WASHER, (CLU FORK BALL STUD) (PART OF 9)	93-95	.....	1	9439514
15.	2-L8	0.796	STUD, CLU FORK BALL (PART OF 9) (M12 X1.75 THD 17.4 SPHER)	93-95	F (L32, M49)	1	15679715
16.	2-L8	0.797	BOOT, CLU FORK	93-95	F (M49)	1	14075724
17.	2-L7	0.685	PIN, TRANS LOC (19.5 MM X 18.5 MM)	93-95	F (L32, M49)	2	12338076
18.		8.977	SCREW, HEX W/FLAT WA (FLYWHL HSG CVR)	93-95	.....	4	12337828
19.	2-L6	0.649	BEARING, CLU PILOT	93-95	F (L32, M49)	1	476574
20.	2-L7	0.679	COVER, FLYWHL HSG	93-95	F (M49)	1	10192224

RPO DEFINITIONS
L32 – ENGINE,3.4L,V6,(3.4S),SFI,OHV
M49 – TRANSMISSION MAN 5 SPD, BORG WARNER, 77MM, 3.75 1ST, .76 5TH, O/D

cardiagn.com

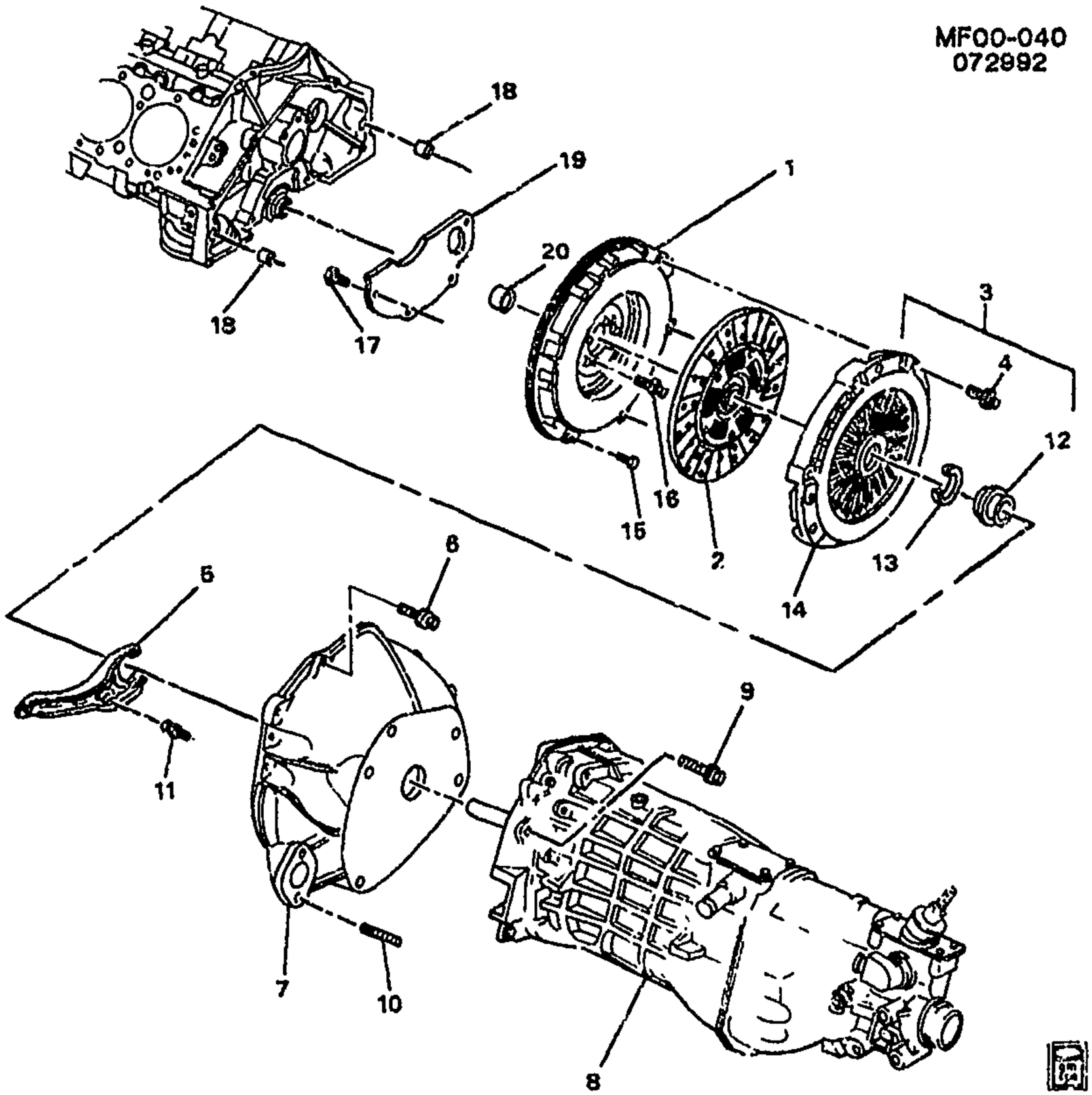

1994–1997 F CLUTCH (MM6)

1.	2–A16	0.666	FLYWHEEL, ENG (153 TEETH) ..	94–97	F (LT1, MM6)	1	10125379
2.	2–A22	0.886	PLATE, CLU DRVN	94–97	F (LT1)	1	12551309
3.		N.S.	PLATE, CLU PRESS (W/CVR & CLU REL BRG)		.....		
4.	2–A21	0.862	BOLT, CLU PRESS PLT (HFH, 3/8–16X1.62, .38 THD, .378 SHLD TAPERED TO .375, 280M) .	94–97	F (LT1, MM6)	6	10079898
5.	2–A20	0.795	FORK, CLU REL (PART OF 8)	94–97	F (MM3)	1	12523312
6.		8.900	BOLT (TRANS) (3.275)	94–97	F	6	10198997
7.		N.S.	HOUSING, FLYWHL (PART OF 8)		.....		
8.	2–N16	4.003	TRANSMISSION, MAN (INCLS 5, 7, 9, 10, 11) (CODES DLD, DLF, DLK)	94–97	F (LT1, MM6)	1	12559016
9.		N.S.	BOLT, TRANS (PART OF 8)		.....		
10.		N.S.	STUD, CLU ACTR CYL (PART OF 8)		.....		
11.		N.S.	STUD, CLU FORK BALL (PART OF 8)		.....		

cardiagn.com

12.	2-A20	0.799	BEARING, CLU REL	94-97	F (LT1, MM6)	1	10085246
13.	2-A20	0.799	RETAINER, CLU REL BRG COLR	94-97	F (LT1, MM6)	1	10111569
14.	2-A21	0.859	PLATE, CLU PRESS (W/CVR) ...	94-97	F (LT1, MM6)	1	10207027
15.		8.940	PIN, GROOVE/F/.312X.375 CZ; 0.375" LENGTH (FLYWHL)	94-97	F	AR	274584
16.	2-A17	0.669	BOLT, FLYWHL (7/16-20 X 31/32)	94-97	F (LT1, MM6)	6	12337973
17.		3.977	SCREW, HEX W/FLAT WA (FLYWHL HSG)	94-97	F	4	12337828
18.		8.939	PIN, DOWEL STRAIGHT 5/8 DIA 1 3/16 LG (TRANS LOC)	94-97	F	2	12338119
19.	2-A18	0.679	COVER, FLYWHL HSG	94-97	F (LT1, MM6)	1	10241153
20.	2-A16	0.649	BEARING, CLU PILOT	94-97	F (LT1)	1	14061685

RPO DEFINITIONS

LT1 – ENGINE-GAS, 8 CYL, 5.7L(5.7P),MFI,HO

MM6 – TRANSMISSION MAN 6 SPD, BORG WARNER, 85MM, 1ST 2.66, 6TH 0.50, O/D

cardiagn.com

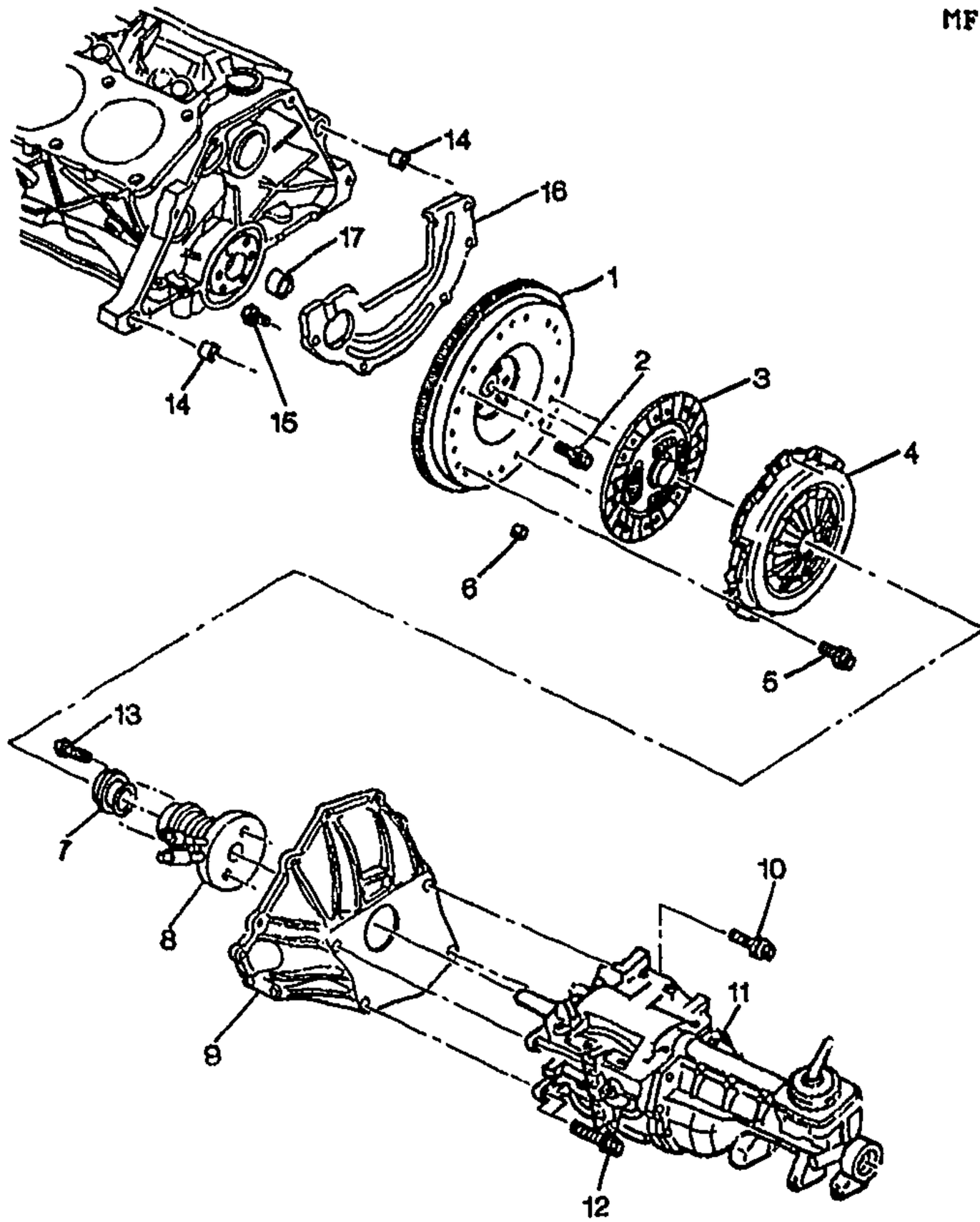

1996-2002 F CLUTCH (L36/3.8K)(M49)

1.	2-L6	0.666	FLYWHEEL, ENG	96-02	F (L36, M49)	1	24503285
2.	2-L7	0.669	BOLT, FLYWHL (TO CR/SHFT)	96-02	F (L36, M49)	8	24505092
3.	2-L9	0.386	PLATE, CLU DRVN	96-02	F (L36, M49)	1	12550237
4.	2-L3	0.859	PLATE, CLU PRESS (W/CVR)	96-97	F (L36, M49)	1	12555801
	2-L8	0.859	PLATE, CLU PRESS (W/CVR)	98-02	F (L36, M49)	1	12558351
5.	2-L3	0.862	BOLT, CLU PRESS PLT (M8X1.25X21.6, 19.8+HD, 10.9, PC) (8.900)	96-02	F (L36, M49)	6	24571367
6.		8.940	PIN, GROOVE/F/.312X.375 CZ; 0.375" LENGTH (FLYWHL)	96-02		AR	274584
7.	2-A20	0.799	BEARING, CLU REL	96-02	F (L36, M49)	1	15705563
8.	2-A20	0.780	CYLINDER, CLU ACTR	96-99	F (L36, M49)	1	15046288
	2-A20	0.780	CYLINDER, CLU ACTR	00-02	F (L36, M49)	1	12566145
9.	2-L7	0.683	HOUSING, FLYWHL	96-02	F (L36, M49)	1	12555002

cardiagn.com

10.		8.900	BOLT, HEX, M12X1.75X45, 30 THD, 10.9, POR (FLYWHL HSG) ..	96-02	.....	6	22649722
11.	2-N15	4.003	TRANSMISSION, MAN (SEE MANUAL TRANS ILLUSTRATION IN GROUP 4.000 FOR DETAILED VIEW)	96-02	F (M49)	1	10232236
12.	2-N16	4.085	BOLT, TRANS (M12X1.75X40) ...	96	F (M49)	4	14056613
	2-N16	4.085	BOLT, TRANS (HFH, M12X1.75X40) (8.900)	97-02	F (M49)	4	22651578
13.		8.900	BOLT, HEX M6X1X16 10.9 PL (CLU ACTR CYL)	96-02	.....	2	11514753
14.	2-L7	0.685	PIN, TRANS LOC (19.5 MM X 18.5 MM)	96-02	F (L36, M49)	2	12338076
15.		8.977	SCREW, HEX W/FLAT WA (FLYWHL HSG CVR)	96-02	.....	5	12337828
16.	2-L7	0.679	COVER, FLYWHL HSG	96-02	F (L36, M49)	1	12550235
17.	2-L6	0.649	BEARING, CLU PILOT	96-02	F (L36, M49)	1	24506531

RPO DEFINITIONS
L36 – ENGINE GAS, 6 CYL, 3.8K, MFI, V6, HO (ERV6 SERIES)
M49 – TRANSMISSION MAN 5 SPD, BORG WARNER, 77MM, 3.75 1ST, .76 5TH, O/D

cardiagn.com

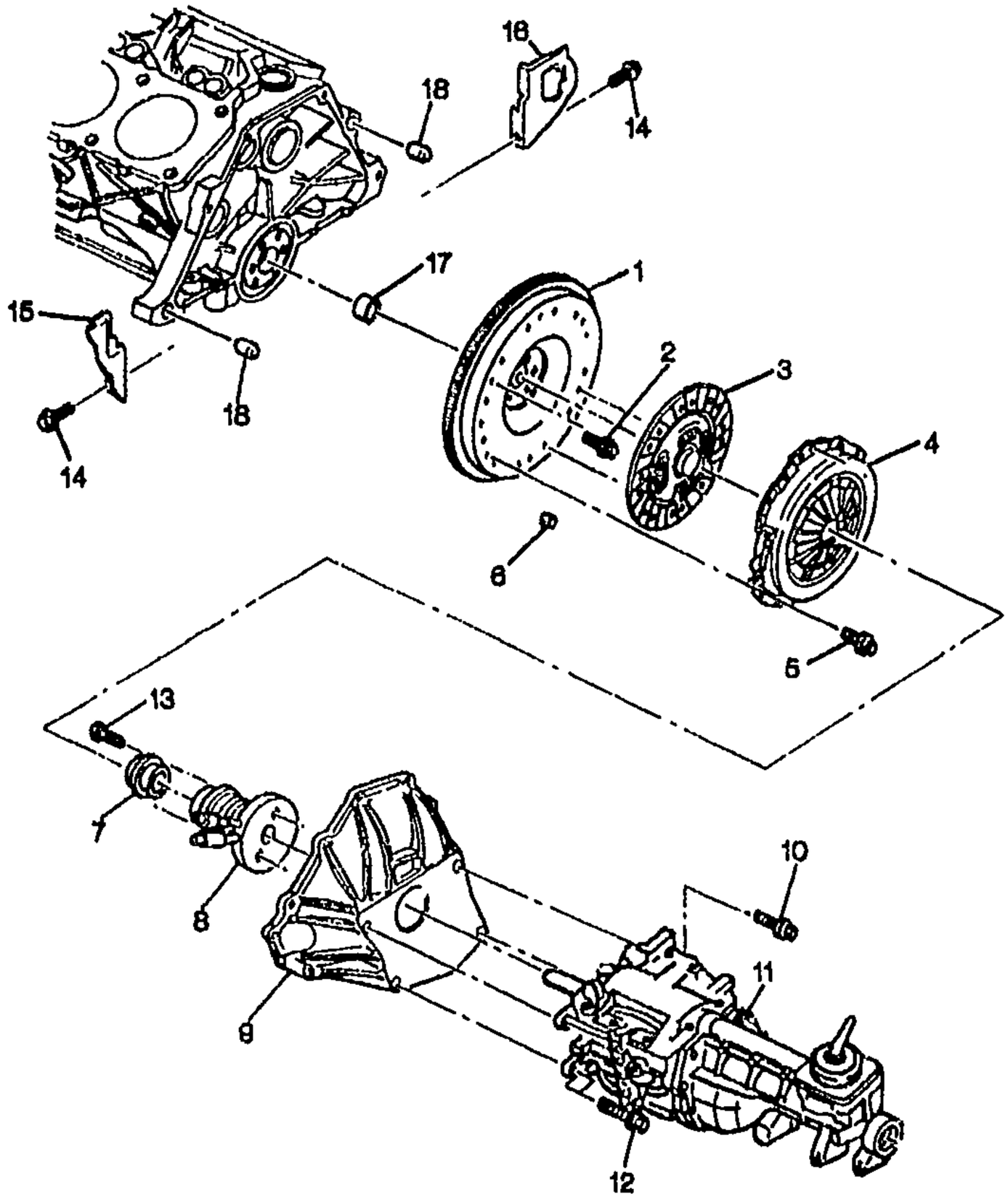

MF00-062

1998-2002 F CLUTCH (LS1,MM6)

1.	2-A16	0.666	FLYWHEEL, (W/CLU PRESS PLT) (INCLS 3, 4)	98-00	F (LS1, MM6)	1	12562765
	2-A22	0.863	FLYWHEEL, (W/CLU PRESS PLT) (INCLS 3, 4) (0.666)	98-00	F (LS1, MM6)	1	12562765
	2-A16	0.666	FLYWHEEL, (W/CLU PRESS PLT) (INCLS 3, 4)	01-02	F (LS1, MM6)	1	12570281
	2-A22	0.863	FLYWHEEL, (W/CLU PRESS PLT) (INCLS 3, 4) (0.666)	01-02	F (LS1. MM6)	1	12570281
2.	2-A17	0.669	BOLT, FLYWHL (HFH, M11X1.5X23.5, 21 THD, 22 O.D., 10.9, GM7114M, MACH, W/SEALANT)	98-02	F (I S1)	6	12553332
3.	2-A22	0.886	PLATE, CLU DRVN (PART OF 1) .	98-00	F (LS1, MM6)	1	12562611
	2-A22	0.886	PLATE, CLU DRVN (PART OF 1) .	01-02	F (LS1, MM6)	1	12570280

cardiagn.com

4.		N.S.	PLATE, CLU PRESS (PART OF 1)				
5.	2-A21	0.862	BOLT, CLU PRESS PLT (HEX FLG HD) (M10X1.5X30) (8.900)	98	F (LS1)	6	11516328
	2-A21	0.862	BOLT, CLU PRESS PLT (HFH M10X1.5X25 10.9 7114M HDR PT, 17.3 FLANGE)	98-02	F (LS1)	6	12561465
6.		8.940	PIN, GROOVE/F/.312X.375 CZ; 0.375" LENGTH (FLYWHL)	98-02	F	AR	274584
7.	2-A20	0.799	BEARING, CLU REL	98-02	F (LS1, MM6)	1	15705563
8.	2-A20	0.780	CYLINDER, CLU ACTR	98-99	F (LS1, MM6)	1	15046288
	2-A20	0.780	CYLINDER, CLU ACTR	00-02	F (LS1, MM6)	1	12565145
9.	2-A18	0.683	HOUSING, CLU	98-02	F (MM6)	1	12453263
10.		8.900	BOLT, HEX, M12X1.75X45, 30 THD, 10.9, POR (FLYWHL HSG)	98-02	F	6	22649722
11.	2-N16	4.003	TRANSMISSION, MAN (SEE MANUAL TRANS ILLUSTRATION IN GROUP 4.000 FOR DETAILED VIEW) (CODE DAX)	98	F (LS1, MM6)	1	12552099
	2-N16	4.003	TRANSMISSION, MAN (SEE MANUAL TRANS ILLUSTRATION IN GROUP 4.000 FOR DETAILED VIEW) (CODE DAX)	99-02	F (LS1, MM6) (EXC BBS)	1	12552099
	2-N16	4.003	TRANSMISSION, MAN (SEE MANUAL TRANS ILLUSTRATION IN GROUP 4.000 FOR DETAILED VIEW) (CODE DXA)	99-02	F (LS1, MM6, BBS)	1	12561561
12.		8.900	BOLT, HFH, M10X1.5X40, 26 THD, 10.9, POR (TRANS)	98-02		8	14050422
13.		8.900	BOLT, HFH M6X1X25, 9.8 7114M, 14.2OD HDR PT FULL THD (CLU ACTR CYL)	98-02		AR	11516424
14.		8.900	BOLT/SCREW, HEX W/FL WA 17 OD, M6X1X20, 9.8, 4345M, DOG PT (TRANS CVR)	98-02	F	2	11515704
15.	2-N17 2-N18	4.105	COVER, TRANS (AC-DELCO #12558718)	98-02	F (LS1, MM6)	LH	12558718
16.	2-N17 2-N18	4.105	COVER, TRANS (AC-DELCO #12561536)	98-02	F (LS1, MM6)	RH	12561536
17.	2-A16	0.649	BEARING, CLU PILOT	98-02	F (LS1, MM6)	1	14061685
18.		8.939	PIN, DOWEL STRAIGHT 5/3 DIA 1 3/16 LG (TRANS LOC)	98-02	F	2	12330119

RPO DEFINITIONS

BBS - KNOB SHIFTER HURST

LS1 - ENGINE GAS, 8 CYL, 5.7L, SFI, ALUMINUM ENGINE

MM6 - TRANSMISSION MAN 6 SPD, BORG WARNER, 85MM, 1ST 2.66, 6TH 0.50, O/D

cardiagn.com

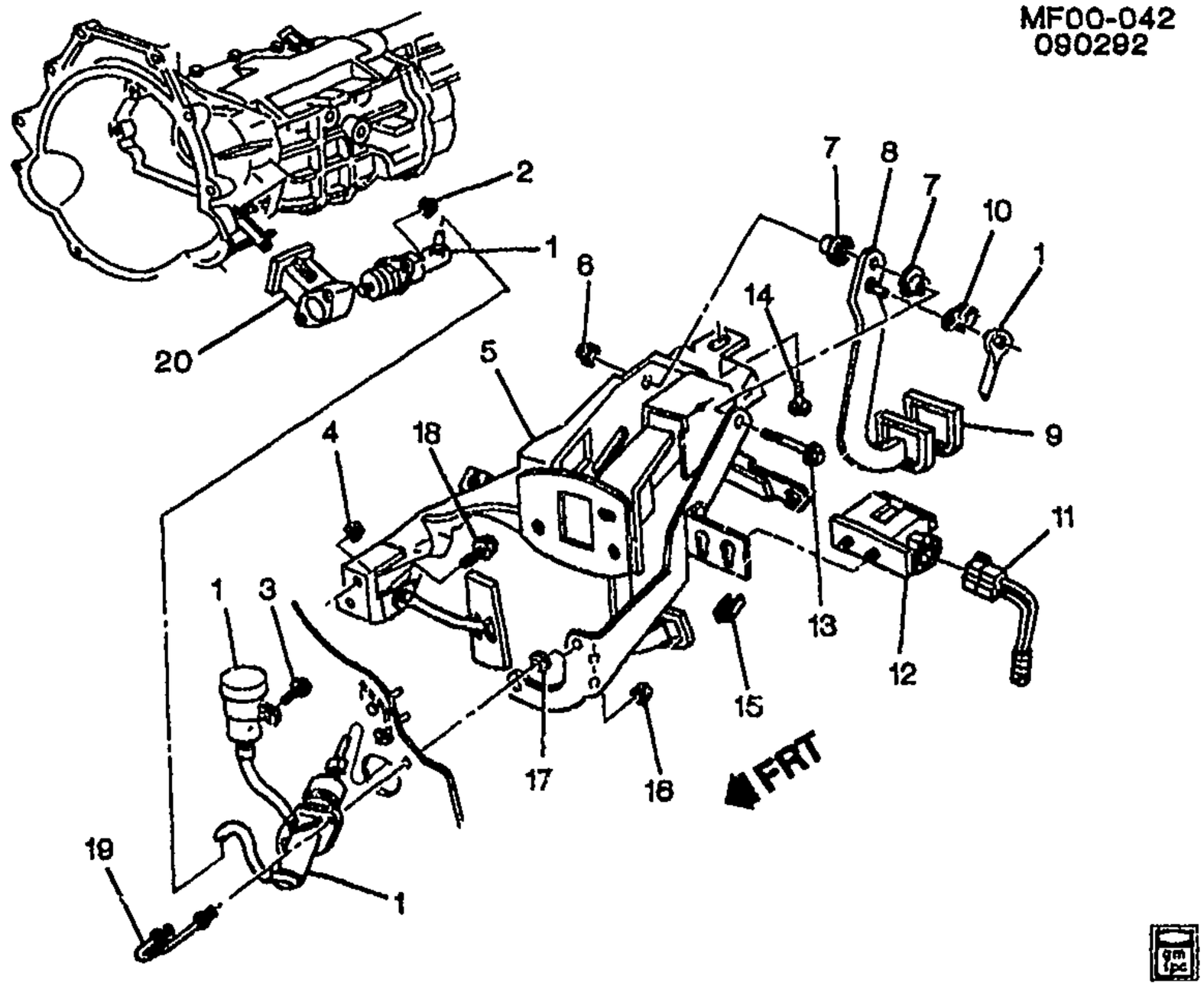

1993 F CLUTCH LINKAGE (M28,M29)

1.	2-A19	0.775	**CYLINDER**, CLU MAS & ACTR (I.D.BY TAG NUMBERS 10230433, 10242082, 12550386 OR 12557509.)	93 F (LT1)	1	12557509
	2-A19	0.775	**CYLINDER**, CLU MAS & ACTR (I.D.BY TAG NUMBERS 10230433, 10242082, 12550386 OR 12557509.)	93 F (L32)	1	12557509
2.		8.915	**NUT**, HEX W/CON WA M8X1.25X9.5 19-OD 9 ZP (CLU ACTR CYL) (8.917)	93	2	11506117
3.		8.950	**RETAINER**, FITS .250 HOLE, 1.01LG.700-OD NYLON BLACK (CLU M/CYL RSVR)	93	1	10121502
4.		8.917	**NUT**, M8X1.25X7.1, ZC 10 (BRK PED)	93	5	11515748
		8.929	**WASHER**, M8X24X2.3 (BRK PED)	93	5	11500323
5.	2-N20	4.625	**PEDAL**, BRK & ACCEL & CLU (W/BRKT) (INCLS 6-9, 13, 15) ...	93 F (M28)	1	10400399
	2-N20	4.625	**PEDAL**, BRK & ACCEL & CLU (W/BRKT) (INCLS 6-9, 13, 15) ...	93 F (M29)	1	10400399
	2-A20	0.830	**PEDAL**, BRK & ACCEL & CLU (W/BRKT) (INCLS 6-9, 13, 15) (4.625)	93 F (M28)	1	10400399

cardiagn.com

			(4.625)				
6.	2–N20	4.634	NUT, BRK PED PIV (PART OF 5) (M10X1.5, GR10, CAD) (HEX) (8.917)	93	F	1	11501033
7.	2–A21	0.831	BUSHING, CLU PED PIV (PART OF 5) (4.626)	93	F (M28, M29)	2	14046812
8.	2–A21	0.832	ARM, CLU PED (PART OF 5)	93	F (M28, M29)	1	10283466
9.	2–N20	4.630	PAD, CLU PED (PART OF 5)	93	F	1	10254528
10.	2–A21	0.852	RETAINER, CLU PED LVR PIN (4.662)	93	F (M28, M29)	1	3817880
11.	2–N15 2–N16 2–N17	4.054	CONNECTOR, SW–CLU PED POSN (BLUE) (2–WAY F) (W/LEADS) (AC–DELCO #PT357)	93	F	1	12102690
12.	2–N15 2–N16	4.054	SWITCH, CLU PED POSN (AC–DELCO #D2214A)	93	F (M28)	1	14094368
13.		N.S.	BOLT, BRK PED PIV (PART OF 5)				
14.		8.900	BOLT–HEX, M8X1.25X30, 22 THD, 24MM OD, 9.8, 7114M (BRK PED BRKT)	93		1	11516594
15.	2–A20	0.829	BUMPER, CLU PED (PART OF 5)	93	F (M28, M29)	1	10254536
16.		8.917	NUT, M8X1.25X7.1, ZC 10 (CLU M/CYL)	93		2	11515748
		8.929	WASHER, M8X24X2.3 (CLU M/CYL)	93		2	11500323
17.		8.921	NUT, METRIC PUSH–ON BOLT RETAINING SPRING (CLU M/CYL)	93		1	10009923
18.		8.900	BOLT, HFH M8X1.25X18 (BRK PED BRKT)	93		1	11513703
19.	2–A19	0.777	BOLT, CLU M/CYL (U/BOLT W/SHLDR) (AC–DELCO #14076942)	93	F (M28, M29)	1	14076942
20.	2–A20	0.782	BRACKET, CLU ACTR CYL (0.829)	93	F (M28, M29)	1	12523315

RPO DEFINITIONS

LT1 – ENGINE–GAS, 8 CYL, 5.7L(5.7P),MFI,HO
L32 – ENGINE,3.4L,V6,(3.4S),SFI,OHV
M28 – TRANSMISSION MAN, 6 SPD, BORG WARNER, 85MM, 3.36 1ST, 1.35 3RD
M29 – TRANSMISSION MAN, 6 SPD, BORG WARNER, 85MM, 2.97 1ST, 1.44 3RD

cardiagn.com

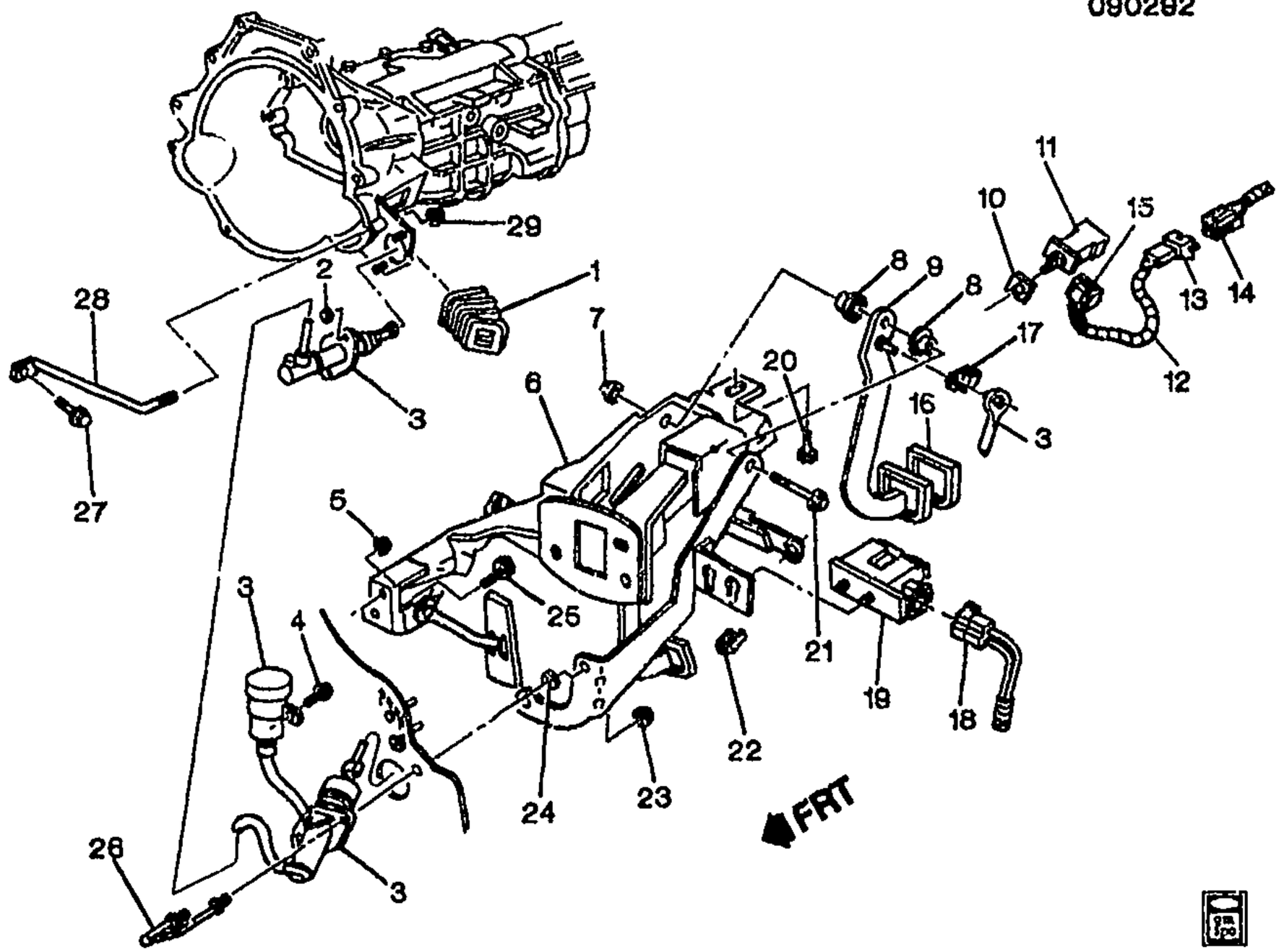

1993-1995 F CLUTCH LINKAGE (M49)

1.	2-L8	0.797	BOOT, CLU FORK	93-95	F (M49)	1	14075724
2.		8.915	NUT, HEX W/CON WA M8X1.25X9.5 19-OD 9 ZP (CLU ACTR CYL) (8.917)	93-95	.....	2	11506117
3.	2-A19	0.775	CYLINDER, CLU MAS & ACTR (I.D.BY TAG NUMBERS 10230433, 10242082, 12550386 OR 12557509.)	93-94	F (LT1)	1	12557509
	2-A19	0.775	CYLINDER, CLU MAS & ACTR (I.D.BY TAG NUMBERS 10230433, 10242082, 12550386 OR 12557509.)	93-94	F (L32)	1	12557509
	2-A19	0.775	CYLINDER, CLU MAS & ACTR (I.D BY TAG NUMBER 10230433, 10242082, 12550386 OR 12557509. FOR 2ND DES SEE 12559912)	95	F (LT1) (1ST DES)	1	12557509
	2-A19	0.775	CYLINDER, CLU MAS & ACTR (I.D BY TAG NUMBER 10230433.10242082, 12550386 OR 12557509. FOR 2ND DES SEE 12559912)	95	F (L32) (1ST DES)	1	12557509

cardiagn.com

	2–A19	0.775	CYLINDER, CLU MAS & ACTR (I.D BY TAG NUMBER 12555293, 12551434 OR 12559912. FOR 1ST DES SEE 12557509)	95	F (LT1) (2ND DES)	1	12559912
	2–A19	0.775	CYLINDER, CLU MAS & ACTR (I.D BY TAG NUMBER 12555293, 12551434 OR 12559912. FOR 1ST DES SEE 12557509)	95	F (L32) (2ND DES)	1	12559912
4.		8.950	RETAINER, FITS .250 HOLE, 1.01LG.700–OD NYLON BLACK (CLU M/CYL RSVR)	93–95	.....	1	10121502
5.		8.917	NUT, M8X1.25X7.1, ZC 10 (BRK PED)	93–95	.....	5	11515748
		8.929	WASHER, M8X24X2.3 (BRK PED)	93–95	.....	5	11500323
6.	2–N20	4.625	PEDAL, BRK & ACCEL & CLU (W/BRKT) (INCLS 7–9, 16, 21, 22)	93–95	F (M49)	1	10400399
	2–A20	0.830	PEDAL, BRK & ACCEL & CLU (W/BRKT) (INCLS 7–9, 16, 21, 22) (4.625)	93–95	F (M49)	1	10400399
7.	2–N20	4.634	NUT, BRK PED PIV (PART OF 6) (M10X1.5, GR10, CAD) (HEX) (8.917)	93–95	F	1	11501033
8.	2–A21	0.831	BUSHING, CLU PED PIV (PART OF 6) (4.626)	93–95	F (M49)	2	14046812
9.	2–A21	0.832	ARM, CLU PED (PART OF 6)	93–95	F (M49)	1	10283466
10.	2–N13	3.887	RETAINER, CRCONT REL SW (PART OF 11) (3.885)	93–95	F (K34)	1	10194431
11.	2–N13	3.883	SWITCH, CRCONT (INCLS 10) (W/RET) (3.887) (AC–DELCO #10195523)	93–95	F (M49, K34)	1	10195523
12.	2–N13	3.887	HARNESS, CRCONT WRG (INCLS 13, 15)	93	F (L32, M49)	1	12113914
	2–N13	3.887	HARNESS, CRCONT WRG (INCLS 13, 15) (TAPE BACK EXTRA CONN ON M30 APPLICATION)	94–95	F (L32, M49, K34)	1	12145111
	2–N13	3.887	HARNESS, CRCONT WRG (INCLS 13, 15)	94–95	F (L32, M49) (EXC K34)	1	12145112
13.		N.S.	CONNECTOR, INLINE–TO I/P HARN (PART OF 12)		.....		
14.		N.S.	CONNECTOR, INLINE–TO I/P HARN		.....		
15.	2–N13	3.887	CONNECTOR, SW–CRCONT REL (PART OF 12) (GRAY) (2–WAY F W/LEADS) (INDEX TAB CTR CAVITY A&B) (2.535) (AC–DELCO #PT217)	93	F	1	12101825
	2–N13	3.887	CONNECTOR, SW–CRCONT REL (PART OF 12) (4–WAY F) (W/LEADS) (9.764) (AC–DELCO #PT483)	93	F	1	12117350
	2–N13	3.887	CONNECTOR, SW–CRCONT REL (PART OF 12) (6–WAY F W/LEADS) (13.090) (AC–DELCO #PT1032)	93	F	1	15305888

cardiagn.com

	2-N13	3.887	CONNECTOR, SW-CRCONT REL (PART OF 12) (BLACK) (2-WAY F) (W/LEADS) (2.530) (AC-DELCO #PT733)	94-95	F	AR	12126463
16.	2-N20	4.630	PAD, CLU PED (PART OF 6)	93-95	F	1	10254528
17.	2-A21	0.852	RETAINER, CLU PED LVR PIN (4.662)	93-95	F (M49)	1	3817880
18.	2-N15 2-N16 2-N17	4.054	CONNECTOR, SW-CLU PED POSN (BLUE) (2-WAY F) (W/LEADS) (AC-DELCO #PT357)	93-95	F	1	12102690
19.	2-N15 2-N16	4.054	SWITCH, CLU PED POSN (AC-DELCO #D2214A)	93-95	F (M49)	1	14094368
20.		8.900	BOLT-HEX, M8X1.25X30, 22 THD, 24MM OD, 9.8, 7114M (BRK PED BRKT)	93-95	.....	1	11516594
21.		N.S.	BOLT, BRK PED PIV (PART OF 6)		.....		
22.	2-A20	0.829	BUMPER, CLU PED (PART OF 6)	93-95	F (M49)	1	10254536
23.		8.917	NUT, M8X1.25X7.1, ZC 10 (CLU M/CYL)	93-95	.....	2	11515748
		8.929	WASHER, M8X24X2.3 (CLU M/CYL)	93-95	.....	2	11500323
24.		8.921	NUT, METRIC PUSH-ON BOLT RETAINING SPRING (CLU M/CYL)	93-95	.....	1	10009923
25.		8.900	BOLT, HFH M8X1.25X18 (BRK PED BRKT)	93-95	.....	1	11513703
26.	2-A19	0.777	BOLT, CLU M/CYL (U/BOLT W/SHLDR) (AC-DELCO #14076942)	93-95	F (M49)	1	14076942
27.		8.900	BOLT, HFH M10X1.5X20 9.8 PZOR (TRANS BR)	93-95	.....	1	11508202
28.	2-N15	4.081	BRACE, TRANS	93-95	F (L32, M49)	1	10192201
29.		8.915	NUT, HFH, 10X1.5 6H THD, 21.3 OD, 9.8 THK 13 HEX DR, GRD 9, ZF (TRANS BR) (8.917)	93-95	.....	1	10255857

RPO DEFINITIONS

K34 – CRUISE CONTROL,AUTOMATIC,ELECTRONIC
LT1 – ENGINE-GAS, 8 CYL, 5.7L(5.7P),MFI,HO
L32 – ENGINE,3.4L,V6,(3.4S),SFI,OHV
M49 – TRANSMISSION MAN 5 SPD, BORG WARNER, 77MM, 3.75 1ST, .76 5TH, O/D

cardiagn.com

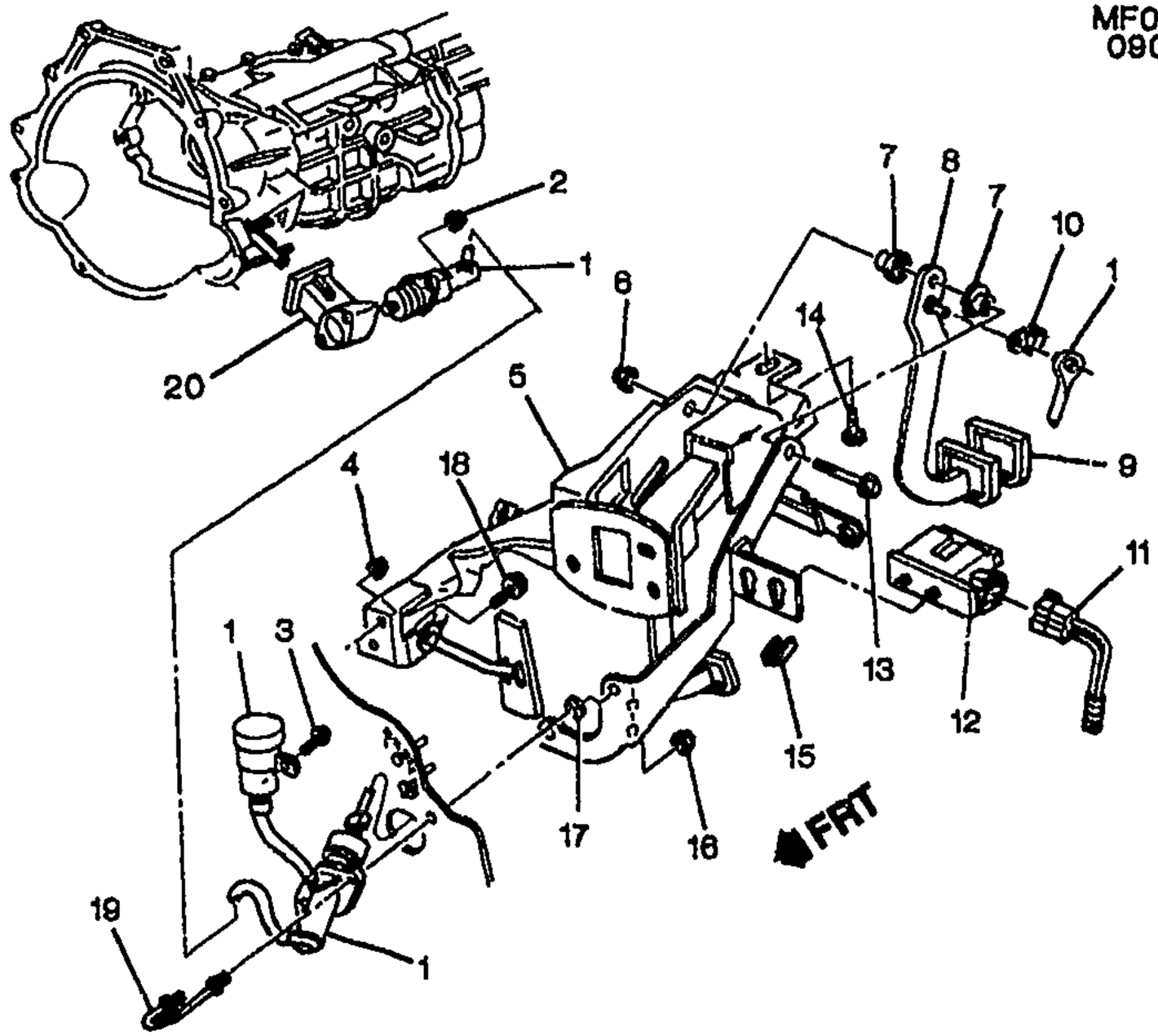

MF00-0421

1994–1997 F CLUTCH LINKAGE (MM6)

1.	2-A19	0.775	**CYLINDER**, CLU MAS & ACTR (I.D.BY TAG NUMBERS 10230433, 10242082, 12550386 OR 12557509.)	94 F (LT1)	1	12557509
	2-A19	0.775	**CYLINDER**, CLU MAS & ACTR (I.D.BY TAG NUMBERS 10230433, 10242082, 12550386 OR 12557509.)	94 F (L32)	1	12557509
	2-A19	0.775	**CYLINDER**, CLU MAS & ACTR (I.D BY TAG NUMBER 10230433, 10242082, 12550386 OR 12557509. FOR 2ND DES SEE 12559912)	95 F (LT1) (1ST DES)	1	12557509
	2-A19	0.775	**CYLINDER**, CLU MAS & ACTR (I.D BY TAG NUMBER 10230433.10242082, 12550386 OR 12557509. FOR 2ND DES SEE 12559912)	95 F (L32) (1ST DES)	1	12557509
	2-A19	0.775	**CYLINDER**, CLU MAS & ACTR (I.D BY TAG NUMBER 12555293, 12551434 OR 12559912. FOR 1ST DES SEE 12557509)	95 F (LT1) (2ND DES)	1	12559912
	2-A19	0.775	**CYLINDER**, CLU MAS & ACTR (I.D BY TAG NUMBER 12555293, 12551434 OR 12559912. FOR 1ST DES SEE 12557509)	95 F (L32) (2ND DES)	1	12559912

cardiagn.com

	2–A19	0.775	CYLINDER, CLU MAS & ACTR (I.D. BY TAG NUMBERS 12555293, 12551434 OR 12559912.)	96–97	F (LT1)	1	12559912
2.		8.915	NUT, HEX W/CON WA M8X1.25X9.5 19–OD 9 ZP (CLU ACTR CYL) (8.917)	94–97		2	11506117
3.		8.950	RETAINER, FITS .250 HOLE, 1.01LG.700–OD NYLON BLACK (CLU M/CYL RSVR (PUSH IN))	94–97		1	10121502
4.		8.917	NUT, M8X1.25X7.1, ZC 10 (BRK PED)	94–97		5	11515748
		8.929	WASHER, M8X24X2.3 (BRK PED)	94–97		5	11500323
5.	2–N20	4.625	PEDAL, BRK & ACCEL & CLU (W/BRKT) (INCLS 6–9, 13, 15)	94–97	F (MM6)	1	10400399
	2–A20	0.830	PEDAL, BRK & ACCEL & CLU (W/BRKT) (INCLS 6–9, 13, 15) (4.625)	94–97	F (MM6)	1	10400399
6.	2–N20	4.634	NUT, BRK PED PIV (PART OF 5) (M10X1.5, GR10, CAD) (HEX) (8.917)	94–96	F	1	11501033
	2–N20	4.634	NUT, BRK PED PIV (PART OF 5) (M10X1.5) (HEX PRVL TORQ) (8.917)	97	F	1	11516072
7.	2–A21	0.831	BUSHING, CLU PED PIV (PART OF 5) (4.626)	94–97	F (MM6)	2	14046812
8.	2–A21	0.832	ARM, CLU PED (PART OF 5)	94–97	F (MM6)	1	10283466
9.	2–N20	4.630	PAD, CLU PED (PART OF 5)	94–97	F	1	10254528
10.	2–A21	0.852	RETAINER, CLU PED LVR PIN (4.662)	94–97	F (MM6)	1	3817880
11.	2–N15 2–N16 2–N17	4.054	CONNECTOR, SW–CLU PED POSN (BLUE) (2–WAY F) (W/LEADS) (AC–DELCO #PT357)	94–97	F	1	12102690
12.	2–N15 2–N16	4.054	SWITCH, CLU PED POSN (AC–DELCO #D2214A)	94–97	F (MM6)	1	14094368
13.		N.S.	BOLT, BRK PED PIV (PART OF 5)				
14.		8.900	BOLT–HEX, M8X1.25X30, 22 THD, 24MM OD, 9.8, 7114M (BRK PED BRKT)	94–97		1	11516594
15.	2–A20	0.829	BUMPER, CLU PED (PART OF 5)	94–97	F (MM6)	1	10254536
16.		8.917	NUT, M8X1.25X7.1, ZC 10 (CLU M/CYL)	94–97		2	11515748
		8.929	WASHER, M8X24X2.3 (CLU M/CYL)	94–97		2	11500323
17.		8.921	NUT, METRIC PUSH–ON BOLT RETAINING SPRING (CLU M/CYL)	94–97		1	10009923
18.		8.900	BOLT, HFH M8X1.25X18 (BRK PED BRKT)	94–97		1	11513703
19.	2–A19	0.777	BOLT, CLU M/CYL (U/BOLT W/SHLDR) (AC–DELCO #14076942)	94–97	F (MM6)	1	14076942
20.	2–A20	0.782	BRACKET, CLU ACTR CYL (0.829)	94–97	F (MM6)	1	12523315

cardiagn.com

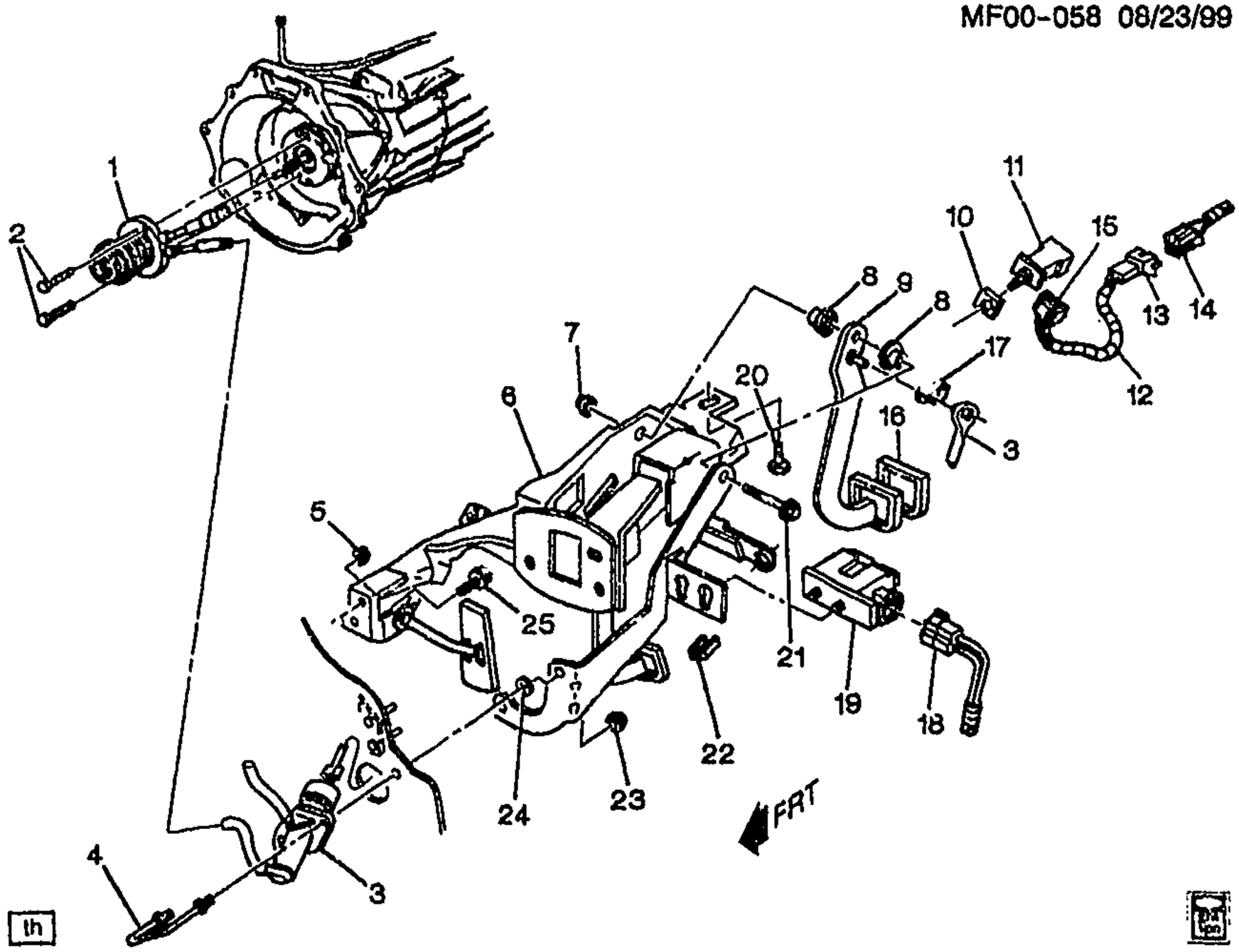

MF00-058

1996-2002 F CLUTCH LINKAGE (L36,M49)

1.	2-L7	0.775	CYLINDER, CLU MAS	96-97	F (L36)	1	12559911
	2-A19	0.775	CYLINDER, CLU MAS (INCL RESERVOIR)	98-00	F (L36, M49)	1	12561178
	2-L7	0.775	CYLINDER, CLU MAS (INCL RESERVOIR)	01-02	F (L36, M49)	1	12565144
	2-A19	0.775	CYLINDER, CLU MAS (5 & 6 SPD TRANS) (AC-DELCO #18M2232)	96-97	F	1	18039186
2.		8.900	BOLT, HEX M6X1X16 10.9 PL (CLU ACTR CYL)	96-02	.....	2	11514753
3.	2-L7	0.775	CYLINDER, CLU MAS	96-97	F (L36)	1	12559911
	2-A19	0.775	CYLINDER, CLU MAS (INCL RESERVOIR)	98-00	F (L36, M49)	1	12561178
	2-L7	0.775	CYLINDER, CLU MAS (INCL RESERVOIR)	01-02	F (L36, M49)	1	12565144
	2-A19	0.775	CYLINDER, CLU MAS (5 & 6 SPD TRANS) (AC-DELCO #18M2232)	96-97	F	1	18039186
4.	2-A19	0.777	BOLT, CLU M/CYL (U/BOLT W/SHLDR) (AC-DELCO #14076942)	96-02	F (M49)	1	14076942
5.		8.917	NUT, HEX M8-1.25 TORQ PRVG 10 (BRK PED)	96	.....	5	11502811
		8.917	NUT, HFH, M8X1.25X8.8, 17.9 OD, 10 DIN, PREV TORQUE (BRK PED)	97-02	.....	5	11517031

cardiagn.com

6.	2–N20	4.625	PEDAL, BRK & ACCEL & CLU (W/BRKT) (INCLS 7–9, 16, 21, 22)	96–97	F (M49)	1	10400399
	2–A20	0.830	PEDAL, BRK & ACCEL & CLU (W/BRKT) (INCLS 7–9, 16, 21, 22) (4.625)	96–97	F (M49)	1	10400399
	2–N20	4.625	PEDAL, BRK & ACCEL & CLU (W/BRKT) (INCLS 7–9, 16, 21, 22) (INCLUDES PAD, ARM, PEDAL, SPRING, PIN, NUT, BUSHING, RETAINER)	98	F (M49)	1	10400451
	2–A20	0.830	PEDAL, BRK & ACCEL & CLU (W/BRKT) (INCLS 7–9, 16, 21, 22) (INCLUDES PAD, ARM, PEDAL, SPRING, PIN, NUT, BUSHING, RETAINER) (4.625)	98	F (M49)	1	10400451
	2–N20	4.625	PEDAL, BRK & CLU (W/BRKT) (INCLS 7–9, 16, 21, 22)	99–02	F (L36, M49)	1	10298616
7.	2–N20	4.634	NUT, BRK PED PIV (PART OF 6) (M10X1.5, GR10, CAD) (HEX) (8.917)	96	F	1	11501033
	2–N20	4.634	NUT, BRK PED PIV (PART OF 6) (M10X1.5) (HEX PRVL TORQ) (8.917)	97–02	F	1	11516072
8.	2–A21	0.831	BUSHING, CLU PED PIV (PART OF 6) (4.626)	96–02	F (M49)	2	14046812
9.	2–A21	0.832	ARM, CLU PED (PART OF 6)	96–97	F (M49)	1	10283466
	2–A21	0.832	ARM, CLU PED (PART OF 6)	98–02	F (M49)	1	10401021
10.	2–N13	3.865	RETAINER, CRCONT VAC REL VLV (PART OF 11)	96–98	F	1	10194431
	2–N15 2–N16	4.054	RETAINER, M/TRNS SHFT ANTICIPATE SW (3.885)	99–02	F (M49)	1	10194431
11.	2–N13	3.883	SWITCH, CRCONT (INCLS 10) (W/RET) (3.387) (AC–DELCO #10195523)	96–98	F (M49, K34)	1	10195523
	2–N15 2–N16	4.054	SWITCH, M/TRNS SHFT ANTICIPATE (W/O RETAINER)	99–02	F (M49)	1	10180569
12.	2–N13	3.887	HARNESS, CRCONT WRG (INCLS 13, 15) (TAPE BACK EXTRA CONN ON M30 APPLICATION)	96–98	F (L36, M49, K34)	1	12145111
	2–N13	3.887	HARNESS, CRCONT WRG (INCLS 13, 15)	96–98	F (L36, M49) (EXC K34)	1	12145112
	2–N13	3.887	HARNESS, CRCONT WRG (INCLS 13, 15) (TAPE BACK EXTRA CONN ON M30 APPLICATION)	99–02	F (L36, M30)	1	12145111
	2–N13	3.887	HARNESS, CRCONT WRG (INCLS 13, 15) (TAPE BACK EXTRA CONN ON M30 APPLICATION)	99–02	F (M49, K34)	1	12145111
13.	2–M8	2.530	CONNECTOR, INLINE–TO I/P HARN (PART OF 12) (GRAY) (6–WAY F W/LEADS) (4.663)	96–02	F	1	12125665
	2–M8	2.530	CONNECTOR, INLINE–TO I/P HARN (PART OF 12) (6–WAY F W/LEADS) (13.090) (AC–DELCO #PT1032)	96–98	F	1	15305888

cardiagn.com

2–M8	2.530	**CONNECTOR**, INLINE–TO I/P HARN (PART OF 12) (3–WAY F) (W/LEADS) (2.535) (AC–DELCO #PT126)	96–97	F87	AR	12085505
2–M8	2.530	**CONNECTOR**, INLINE–TO I/P HARN (PART OF 12) (NATURAL) (2–WAY F) (W/LEADS) (2.535) (AC–DELCO #PT213)	96	F	1	12101821
2–M8	2.530	**CONNECTOR**, INLINE–TO I/P HARN (PART OF 12) (10–WAY F W/LEADS) (2.535) (AC–DELCO #PT150)	96–02	F	1	12101762
2–M8	2.530	**CONNECTOR**, INLINE–TO I/P HARN (PART OF 12) (BLUE) (10–WAY F) (W/LEADS) (AC PT224) (2.535) (AC–DELCO #PT224)	96–02	F	1	12101832
2–M8	2.530	**CONNECTOR**, INLINE–TO I/P HARN (PART OF 12) (GRAY) (8–WAY F) (W/LEADS) (2.535) (AC–DELCO #PT214)	97–02	F	1	12101822
2–M8	2.530	**CONNECTOR**, INLINE–TO I/P HARN (PART OF 12) (2–WAY F W/LEADS, W/INDEX TAB OTR EDGE OF CAVITY B) (2.535) (AC–DELCO #PT146)	98	F	1	12085535
2–M8	2.530	**CONNECTOR**, INLINE–TO I/P HARN (PART OF 12) (NATURAL) (2–WAY F) (W/LEADS) (2.535) (AC–DELCO #PT213)	98–02	F (AQ9)	1	12101821
2–M8	2.530	**CONNECTOR**, INLINE–TO I/P HARN (PART OF 12) (W/LEADS) (4.022) (AC–DELCO #LS28)	98	F	1	12125966
2–M8	2.530	**CONNECTOR**, INLINE–TO I/P HARN (PART OF 12) (4–WAY F, W/O LEADS) (9.709)	98–02	F (L36, LS1)	1	12129136
2–M8	2.530	**CONNECTOR**, INLINE–TO I/P HARN (PART OF 12) (W/O LEADS)	96–02	F (L36)	1	12162504
2–M8	2.530	**CONNECTOR**, INLINE–TO I/P HARN (PART OF 12) (4–WAY F) (M/P 150) (W/LEADS) (13.100) (AC–DELCO #PT1025)	98–02	F	1	15305883
2–M8	2.530	**CONNECTOR**, INLINE–TO I/P HARN (PART OF 12) (BLACK) (2–WAY F W/LEADS) (2.535) (AC–DELCO #PT159)	98–02	F87	1	12101888
2–M8	2.530	**CONNECTOR**, INLINE–TO I/P HARN (PART OF 12) (2–WAY M W/LEADS) (12.243) (AC–DELCO #PT1227)	96–02	F (M49)	1	1[illegible]306065
2–M8	2.530	**CONNECTOR**, INLINE–TO I/P HARN (PART OF 12) (2–WAY F W/LEADS, W/INDEX TAB OTR EDGE OF CAVITY B) (2.535) (AC–DELCO #PT146)	02	F (T79)	1	12085535

cardiaopn.com

	2–M8	2.530	CONNECTOR, INLINE–TO I/P HARN (FLAT) (PART OF 12) (4–WAY F) (W/LEADS) (2.535) (AC–DELCO #PT109)	96–98	F	AR	12085487
	2–M8	2.530	CONNECTOR, INLINE–TO I/P HARN (PART OF 12) (GRAY) (2–WAY F W/LEADS) (INDEX TAB CTR CAVITY A&B) (2.535) (AC–DELCO #PT217)	96–97	F (C60, K34, T39) (EXPORT)	6	12101825
	2–M8	2.530	CONNECTOR, INLINE–TO I/P HARN (PART OF 12) (2–WAY F W/LEADS, W/INDEX TAB OTR EDGE OF CAVITY B) (2.535) (AC–DELCO #PT146)	99–02	F (T79) (EXPORT)	1	12085535
14.		N.S.	CONNECTOR, INLINE–TO I/P HARN (PART OF I/P HARN)		.....		
15.	2–N13	3.887	CONNECTOR, SW–CRCONT REL (PART OF 12) (BLACK) (2–WAY F) (W/LEADS) (2.530) (AC–DELCO #PT733)	96–02	F	AR	12126463
16.	2–N20	4.630	PAD, CLU PED (PART OF 6)	96–02	F	1	10254528
17.	2–A21	0.852	RETAINER, CLU PED LVR PIN (4.662)	96–02	F (M49)	1	3817880
18.	2–N15 2–N16 2–N17	4.054	CONNECTOR, SW–CLU PED POSN (BLUE) (2–WAY F) (W/LEADS) (AC–DELCO #PT357)	96–02	F	1	12102690
19.	2–N15 2–N16	4.054	SWITCH, CLU PED POSN (AC–DELCO #D2214A)	96–02	F (M49)	1	14094368
20.		8.900	BOLT–HEX, M8X1.25X30, 22 THD, 24MM OD, 9.8, 7114M (BRK PED BRKT)	96–02	.....	1	11516594
21.		N.S.	BOLT, BRK PED PIV (PART OF 6)		.....		
22.	2–A20	0.829	BUMPER, CLU PED (PART OF 6)	96–02	F (M49)	1	10254536
23.		8.917	NUT, M8X1.25X7.1, ZC 10 (CLU M/CYL)	96–02	.....	2	11515748
		8.929	WASHER, M8X24X2.3 (CLU M/CYL)	96–02	.....	2	11500323
24.		8.921	NUT, METRIC PUSH–ON BOLT RETAINING SPRING (CLU M/CYL)	96–02	.....	1	10009923
25.		8.900	BOLT, HFH M8X1.25X18 (BRK PED BRKT)	96–02	.....	1	11513703

RPO DEFINITIONS

AQ9 – SEAT,FRONT BUCKET,DRIVER,PASSENGER,RECLINING
C60 – AIR CONDITIONER,FRONT,MANUAL CONTROLS
K34 – CRUISE CONTROL,AUTOMATIC,ELECTRONIC
LS1 – ENGINE GAS, 8 CYL, 5.7L, SFI, ALUMINUM ENGINE
L36 – ENGINE GAS, 6 CYL, 3.8K, MFI, V6, HO (ERV6 SERIES)
M30 – TRANSMISSION,AUTOMATIC 4 SPEED,4L60E,ELECTRONIC
M49 – TRANSMISSION MAN 5 SPD, BORG WARNER, 77MM, 3.75 1ST, .76 5TH, O/D
T39 – LAMP,TURN SIGNAL,AUXILIARY(EXPORT)
T79 – LAMPS,REAR FOG(EXPORT)

cardiagn.com

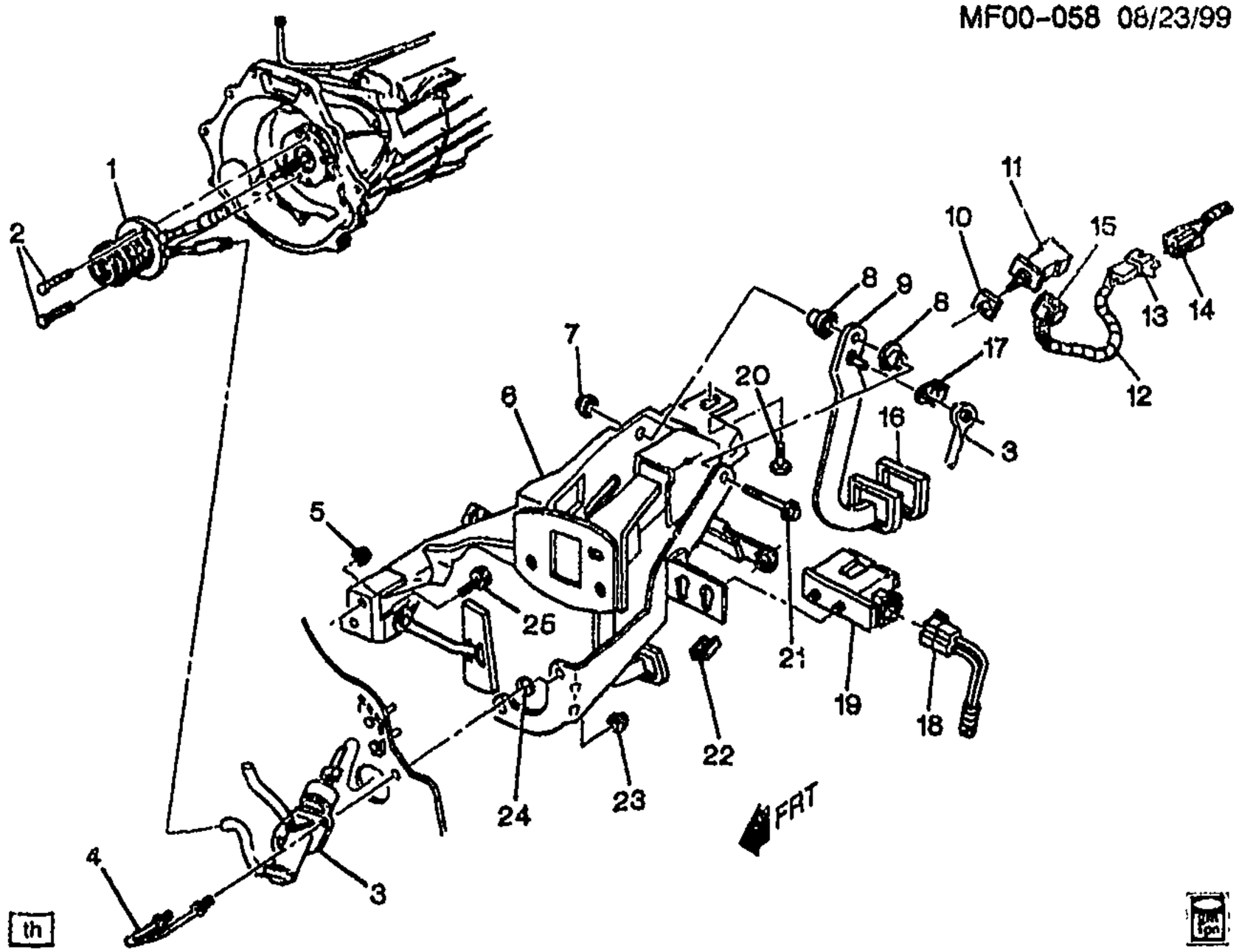

MF00-0581

1998-2002 F CLUTCH LINKAGE (LS1,MM6)

1.	2-A20	0.780	CYLINDER, CLU ACTR	98-99	F	1	15046288
	2-A20	0.780	CYLINDER, CLU ACTR	01-02	F	1	12565145
2.		8.900	BOLT, HEX M6X1X16 10.9 PL (CLU ACTR CYL)	98-02		2	11514753
3.	2-A19	0.775	CYLINDER, CLU MAS (INCL RESERVOIR)	98-00	F	1	12561178
	2-L7	0.775	CYLINDER, CLU MAS (INCL RESERVOIR)	01-02	F	1	12565144
4.	2-A19	0.777	BOLT, CLU M/CYL (U/BOLT W/SHLDR) (AC-DELCO #14076942)	98-02	F (MM6)	1	14076942
5.		8.917	NUT, M8X1.25X7.1, ZC 10 (BRK PED)	98-02		5	11515748
		8.929	WASHER, M8X24X2.3 (BRK PED)	98-02		5	11500323
6.	2-N20	4.625	PEDAL, BRK & ACCEL & CLU (W/BRKT) (INCLS 7-9, 16, 21, 22) (INCLUDES PAD, ARM, PEDAL, SPRING, PIN, NUT, BUSHING, RETAINER)	98	F (MM6)	1	10400451
	2-A20	0.830	PEDAL, BRK & ACCEL & CLU (W/BRKT) (INCLS 7-9, 16, 21, 22) (INCLUDES PAD, ARM, PEDAL, SPRING, PIN, NUT, BUSHING, RETAINER) (4.625)	98	F (MM6)	1	10400451

cardiagn.com

	2–N20	4.625	**PEDAL**, BRK & ACCEL & CLU (W/BRKT) (INCLS 7–9, 16, 21, 22) (INCLUDES PAD, ARM, PEDAL, SPRING, PIN, NUT, BUSHING, RETAINER)	99–02	F (LS1, MM6)	1	10400451
	2–A20	0.830	**PEDAL**, BRK & ACCEL & CLU (W/BRKT) (INCLS 7–9, 16, 21, 22) (INCLUDES PAD, ARM, PEDAL, SPRING, PIN, NUT, BUSHING, RETAINER) (4.625) ...	99–02	F (LS1, MM6)	1	10400451
7.	2–N20	4.634	**NUT**, BRK PED PIV (PART OF 6) (M10X1.5) (HEX PHVL TORQ) (8.917)	98–02	F	1	11516072
8.	2–A21	0.831	**BUSHING**, CLU PED PIV (PART OF 6) (4.626)	98–02	F (MM6)	2	14046812
9.	2–A21	0.832	**ARM**, CLU PED (PART OF 6)	98–02	F (MM6)	1	10401021
10.	2–N13	3.885	**RETAINER**, CRCONT VAC REL VLV (PART OF 11)	98	F	1	10194431
	2–N15 2–N16	4.054	**RETAINER**, M/TRNS SHFT ANTICIPATE SW (NOT PART OF SWITCH) (3.885)	99–02	F (MM6)	1	10194431
11.	2–N13	3.883	**SWITCH**, CRCONT (INCLS 10) (W/O RET) (3.887)	98	F (K34, MM6)	1	22584374
	2–N15 2–N16	4.054	**SWITCH**, M/TRNS SHFT ANTICIPATE (W/O RETAINER) ...	99–02	F (MM6)	1	10180569
12.	2–N13	3.887	**HARNESS**, CRCONT WRG (INCLS 13, 15) (TAPE BACK EXTRA CONN ON M30 APPLICATION)	98–02	F	1	12145111
13.		N.S.	**CONNECTOR**, INLINE–TO I/P HARN (PART OF 12)		.....		
14.		N.S.	**CONNECTOR**, INLINE–TO I/P HARN (PART OF I/P HARN)		.....		
15.	2–N13	3.887	**CONNECTOR**, SW–CRCONT REL (PART OF 12) (BLACK) (2–WAY F) (W/LEADS) (2.530) (AC–DELCO #PT733)	98–02	F	AR	12126463
16.	2–N20	4.630	**PAD**, CLU PED (PART OF 6)	98–02	F	1	10254528
17.	2–A21	0.852	**RETAINER**, CLU PED LVR PIN (4.662)	98–02	F (MM6)	1	3817880
18.	2–N15 2–N16 2–N17	4.054	**CONNECTOR**, SW–CLU PED POSN (BLUE) (2–WAY F) (W/LEADS) (AC–DELCO #PT357)	98–02	F	1	12102690
19.	2–N13 2–N16	4.054	**SWITCH**, CLU PED POSN (AC–DELCO #D2214A)	98–02	F (MM6)	1	14094368
20.		8.900	**BOLT–HEX**, M8X1.25X30, 22 THD, 24MM OD, 9.8, 7114M (BRK PED BRKT)	98–02	.....	1	11516594
21.		N.S.	**BOLT**, BRK PED PIV (PART OF 6)		.....		
22.		N.S.	**BUMPER**, CLU PED (PART OF 6)		.....		
23.		8.917	**NUT**, M8X1.25X7.1, ZC 10 (CLU M/CYL)	98–02	.....	2	11515748
		8.929	**WASHER**, M8X24X2.3 (CLU M/CYL)	98–02	.....	2	11500323

cardiagn.com

24.	8.921	NUT, METRIC PUSH-ON BOLT RETAINING SPRING (CLU M/CYL)	98-02	1	10009923
25.	8.900	BOLT, HFH M8X1.25X18 (BRK PED BRKT)	98-02	1	11513703

RPO DEFINITIONS
K34 – CRUISE CONTROL,AUTOMATIC,ELECTRONIC
LS1 – ENGINE GAS, 8 CYL, 5.7L, SFI, ALUMINUM ENGINE
MM6 – TRANSMISSION MAN 6 SPD, BORG WARNER, 85MM, 1ST 2.66, 6TH 0.50, O/D

cardiagn.com

ILLUSTRATION INDEX

	TITLE	GRID
1993–2002	F RADIATOR ASM	2–I4
1993–1995	F RADIATOR MOUNTING & RELATED PARTS (C60)	2–I7
1993–1995	F RADIATOR MOUNTING & RELATED PARTS (C41,EXC 1LE)	2–I10
1996	F RADIATOR MOUNTING & RELATED PARTS (C41)	2–I10
1993–1995	F RADIATOR MOUNTING & RELATED PARTS (C41,1LE)	2–I13
1996–1997	F RADIATOR MOUNTING & RELATED PARTS (C60)	2–I15
1996–2002	F RADIATOR MOUNTING & RELATED PARTS	2–I17
1993–1995	F ENGINE COOLANT FAN (SINGLE FAN)	2–I19
1993–2002	F ENGINE COOLANT FAN (DUAL FAN)	2–I21
1993–2002	F ENGINE BLOCK HEATER (K05)	2–I23
1993–1994	F HOSES & PIPES/RADIATOR (LT1/5.7P)	2–I24
1993–1995	F HOSES & PIPES/RADIATOR (L32/3.4S)	2–I27
1995–1997	F HOSES & PIPES/RADIATOR (LT1/5.7P)	2–J2
1995–2002	F HOSES & PIPES/RADIATOR (L36/3.8)	2–J5
1998–1999	F HOSES & PIPES/RADIATOR (LS1/5.7G)	2–J7
2000–2002	F HOSES & PIPES/RADIATOR (LS1/5.7G)	2–J9
1993–1994	F ENGINE OIL COOLER LINES (KC4)	2–J11
1995	F ENGINE OIL COOLER LINES (KC4,LT1)	2–J13
1993–1995	F TENSIONER/DRIVE BELT & IDLER PULLEYS(L32)	2–J15
1993–1997	F TENSIONER/DRIVE BELT & IDLER PULLEYS(LT1)	2–J16
1995–1996	F TENSIONER/DRIVE BELT & IDLER PULLEYS(L36)	2–J18
1997–2002	F TENSIONER/DRIVE BELT & IDLER PULLEYS(L36)	2–J20
1998–2002	F TENSIONER/DRIVE BELT & IDLER PULLEYS(LS1)	2–J22

cardiagn.com

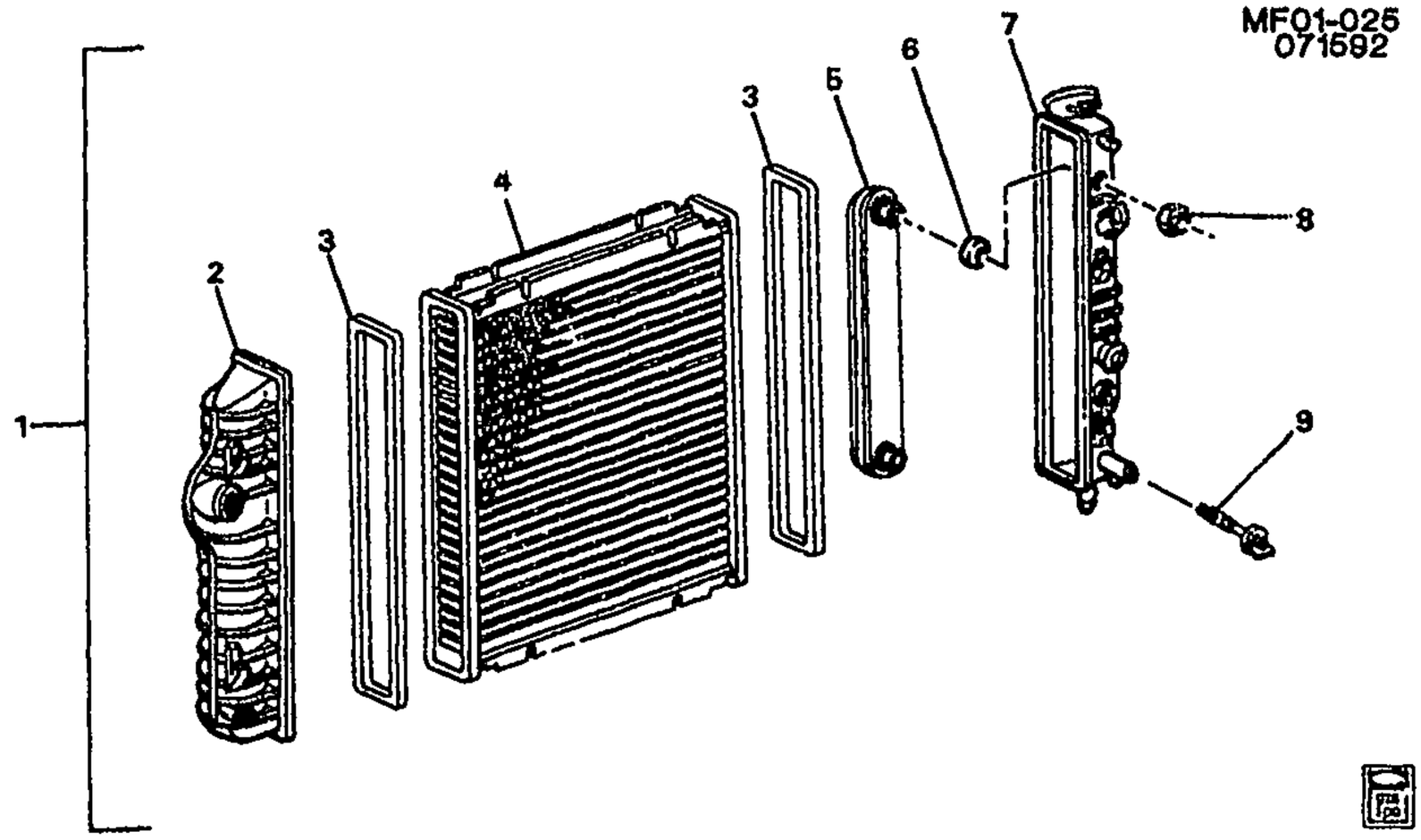

MF01-025

1993-2002 F RADIATOR ASM

1.	2-B17	1.219	RADIATOR, (INCLS 2-9) (AC-DELCO #21341)	00-02	F (L36, M30)	1	52486939
	2-B17	1.219	RADIATOR, (INCLS 2-9) (AC-DELCO #21342)	00-02	F (L36, M49)	1	52486940
	2-B17	1.219	RADIATOR, (INCLS 2-9) (AC-DELCO #21344)	00-02	F (LS1, MM6)	1	52487149
	2-B17	1.219	RADIATOR, (INCLS 2-9) (AC-DELCO #21345)	00-02	F (LS1, M30)	1	52487150
	2-B17	1.219	RADIATOR, (CODE BD) (INCLS 2-9) (AC-DELCO #20850)	96-97	F (L36, M30)	1	52470330
	2-B17	1.219	RADIATOR, (CODE B') (INCLS 2-9) (AC-DELCO #20929)	98-99	F (L36, M49)	1	52473158
	2-B17	1.219	RADIATOR, (CODE C2) (INCLS 2-9) (AC-DELCO #20930)	98-99	F (L36, M30)	1	52473159
	2-B17	1.219	RADIATOR, (CODE FU, FY, H8) (INCLS 2-9) (AC-DELCO #20700)	93	F (LT1, MD8, M28, M29)	1	52466004
	2-B17	1.219	RADIATOR, (CODE FU, FY, H8) (INCLS 2-9) (AC-DELCO #20700)	94-96	F (LT1, M30, MM6)	1	52466004
	2-B17	1.219	RADIATOR, (CODE F8) (INCLS 2-9) (AC-DELCO #20849)	96-97	F (L36, M49)	1	52470329
	2-B17	1.219	RADIATOR, (CODE HA) (INCLS 2-9) (AC-DELCO #20924)	98-99	F (LS1, MM6)	1	52471356
	2-B17	1.219	RADIATOR, (CODE HZ) (INCLS 2-9) (AC-DELCO #20850)	95	F (L36)	1	52470330
	2-B17	1.219	RADIATOR, (CODE HZ, FJ) (INCLS 2-9) (AC-DELCO #20850)	93-95	F (L32)	1	52470330
	2-B17	1.219	RADIATOR, (CODE JE) (INCLS 2-9) (AC-DELCO #20925)	98-99	F (LS1, M30)	1	52471357
	2-B17	1.219	RADIATOR, (CODE MC) (INCLS 2-9) (AC-DELCO #20883)	97	F (LT1, MM6)	1	52472602

cardiagn.com

2.	2-B17	1.219	TANK, RAD INL (PART OF 1) (AC-DELCO #52465333)	93-95	F (L32)	1	52465333
	2-B17	1.219	TANK, RAD INL (PART OF 1) (AC-DELCO #52465337)	93-97	F (LT1)	1	52465337
	2-B17	1.219	TANK, RAD INL (PART OF 1) (AC-DELCO #52465333)	95-02	F (L36)	1	52465333
	2-B17	1.219	TANK, RAD INL (PART OF 1) (AC-DELCO #52465333)	98-02	F (LS1)	1	52465333
3.	2-B17	1.219	GASKET KIT, RAD TK (GASKET, RAD (58WX471.5L) (PART OF 1)) (*KIT1) (AC-DELCO #52484143)	93-02	F	1	52484143
4.	2-B17	1.219	CORE, RAD (PART OF 1) (AC-DELCO #10060)	93-95	F (L32)	1	52465335
	2-B17	1.219	CORE, RAD (PART OF 1) (AC-DELCO #10061)	93-96	F (LT1)	1	52465339
	2-B17	1.219	CORE, RAD (PART OF 1) (AC-DELCO #10060)	95-97	F (L36)	1	52465335
	2-B17	1.219	CORE, RAD (PART OF 1) (AC-DELCO #10075)	97	F (LT1)	1	52477362
		N.S.	CORE, RAD (PART OF 1)	98-02	....		
5.	2-N19	4.128	COOLER, TRANS FLUID (PART OF 1) (AC-DELCO #3055675) ..	93	F (LT1, MD8)	1	3055675
	2-N19	4.128	COOLER, TRANS FLUID (PART OF 1) (AC-DELCO #3055675) ..	94-97	F (LT1, M30)	1	3055675
	2-N19	4.128	COOLER, TRANS FLUID (PART OF 1)	00-02	F (L36, M30)	1	52487851
	2-N19	4.128	COOLER, TRANS FLUID (PART OF 1)	00-02	F (LS1, M30)	1	52487852
	2-N19	4.128	COOLER, TRANS FLUID (IN RAD) (PART OF 1) (AC-DELCO #52461116)	93	F (L32, MD8)	1	52461116
	2-N19	4.128	COOLER, TRANS FLUID (IN RAD) (PART OF 1) (AC-DELCO #52461116)	94-95	F (L32, M30)	1	52461116
	2-N19	4.128	COOLER, TRANS FLUID (IN RAD) (PART OF 1) (AC-DELCO #52461116)	96-99	F (L36, M30)	1	52461116
6.		N.S.	GASKET KIT, RAD TK (GASKET, RAD (32MM O.D.) (PART OF 1)) (*KIT1)		.....		
7.	2-B17	1.219	TANK, RAD OTLT (PART OF 1) (AC-DELCO #52465334)	93-95	F (L32, M49)	1	52465334
	2-B17	1.219	TANK, RAD OTLT (PART OF 1) (AC-DELCO #52465338)	93	F (LT1, M28, M29)	1	52465338
	2-B17	1.219	TANK, RAD OTLT (PART OF 1) (AC-DELCO #52480209)	93	F (LT1, MD8)	1	52480209
	2-B17	1.219	TANK, RAD OTLT (PART OF 1) (AC-DELCO #52487848)	93	F (L32, MD8)	1	52487848
	2-B17	1.219	TANK, RAD OTLT (PART OF 1) (AC-DELCO #52465338)	94-97	F (LT1, MM6)	1	52465338
	2-B17	1.219	TANK, RAD OTLT (PART OF 1) (AC-DELCO #52480209)	94-97	F (LT1, M30)	1	52480209
	2-B17	1.219	TANK, RAD OTLT (PART OF 1) (AC-DELCO #52487848)	94-95	F (L32, M30)	1	52487848
	2-B17	1.219	TANK, RAD OTLT (PART OF 1) (AC-DELCO #52487848)	95-02	F (L36, M30)	1	52487848

cardiaco.com

	2–B17	1.219	TANK, RAD OTLT (PART OF 1) (AC–DELCO #52465334)	96–97	F (L36, M49)	1	52465334
	2–B17	1.219	TANK, RAD OTLT (PART OF 1) (AC–DELCO #52480208)	98–99	F (LS1, MM6)	1	52480208
	2–B17	1.219	TANK, RAD OTLT (PART OF 1) (AC–DELCO #52480209)	98–99	F (LS1, M30)	1	52480209
	2–B17	1.219	TANK, RAD OTLT (PART OF 1) (AC–DELCO #52487847)	98–02	F (L36, M49)	1	52487847
	2–B17	1.219	TANK, RAD OTLT (PART OF 1) (AC–DELCO #52487849)	00–02	F (LS1, M30)	1	52487849
	2–B17	1.219	TANK, RAD OTLT (PART OF 1) (AC–DELCO #52487850)	00–02	F (LS1, MM6)	1	52487850
8.	2–B21	1.271	NUT, RAD (PART OF 1) (HEX 22 X 2.5 X 6.85) (1.219)	93–02	F	1	3049652
9.	2–B16	1.173	COCK, RAD DRN (PART OF 1) (W/SEAL) (1.219)	93–02	F	1	52461346

SERVICE KITS

1.	2–B17	1.219	GASKET KIT, RAD TK (INCLS 3, 6) (AC–DELCO #52484143)	93–02	F	1	52484143

RPO DEFINITIONS

LS1 – ENGINE GAS, 8 CYL, 5.7L, SFI, ALUMINUM ENGINE
LT1 – ENGINE–GAS, 8 CYL, 5.7L(5.7P),MFI,HO
L32 – ENGINE,3.4L,V6,(3.4S),SFI,OHV
L36 – ENGINE GAS, 6 CYL, 3.8K, MFI, V6, HO (ERV6 SERIES)
MD8 – TRANSMISSION,AUTOMATIC 4–SPEED(THM700R4/4L60)
MM6 – TRANSMISSION MAN 6 SPD, BORG WARNER, 85MM, 1ST 2.66, 6TH 0.50, O/D
M28 – TRANSMISSION MAN, 6 SPD, BORG WARNER, 85MM, 3.36 1ST, 1.35 3RD
M29 – TRANSMISSION MAN, 6 SPD, BORG WARNER, 85MM, 2.97 1ST, 1.44 3RD
M30 – TRANSMISSION,AUTOMATIC 4 SPEED,4L60E,ELECTRONIC
M49 – TRANSMISSION MAN 5 SPD, BORG WARNER, 77MM, 3.75 1ST, .76 5TH, O/D

cardiagn.com

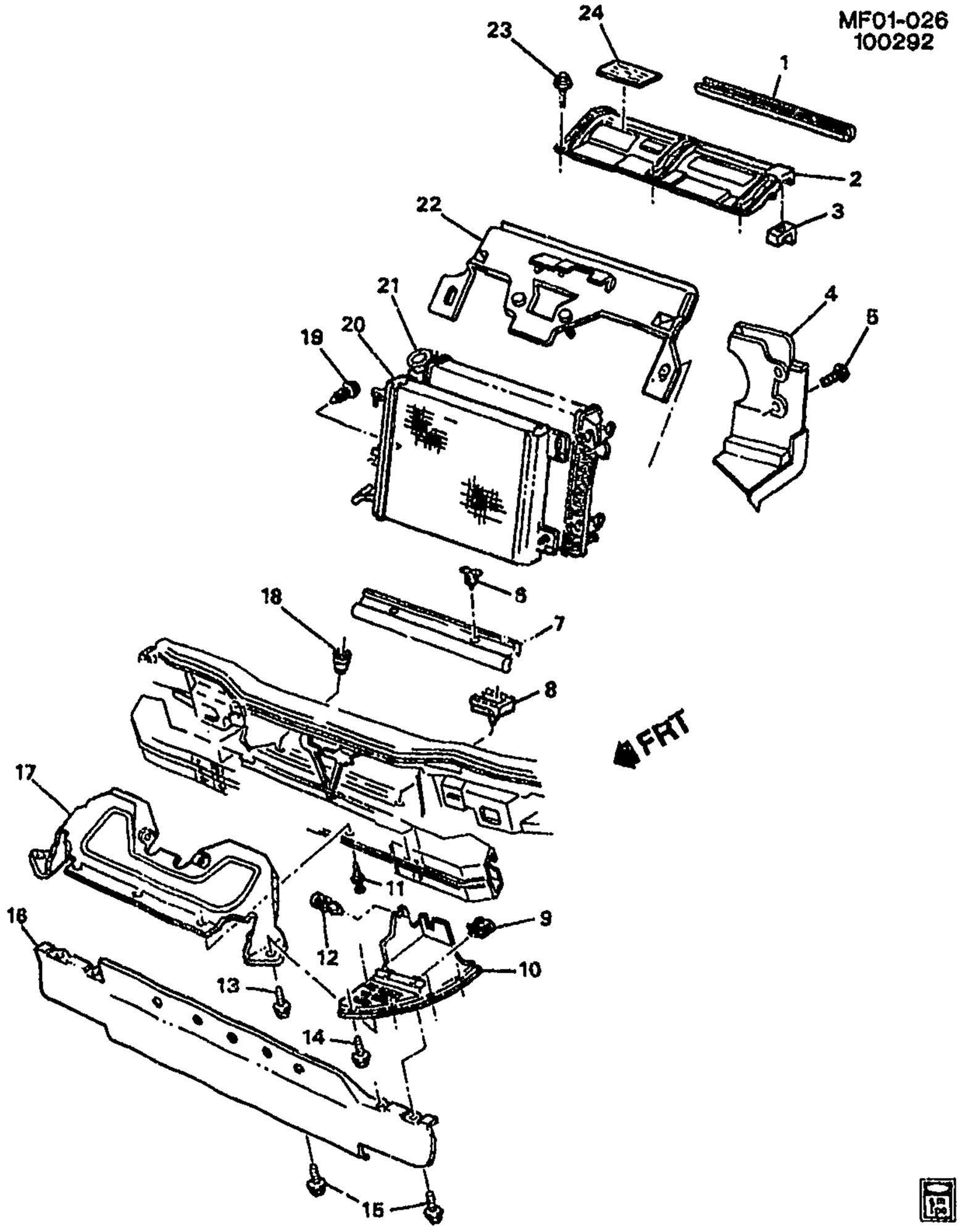

MF01-026

1993–1995 F RADIATOR MOUNTING & RELATED PARTS (C60)

1.	2–B20	1.270	INSULATOR, RAD UPR MTG PNL	93–95	F	1	10233521
2.	2–B20	1.270	PANEL, RAD UPR MTG	93–95	F	1	10262963
3.	2–B20	1.270	INSULATOR, RAD UPR	93–95	F	2	10186026
4.	2–B21	1.272	DEFLECTOR, RAD AIR SI	93–95	F (L32, C60)	1	10219588
5.		8.950	RETAINER–RKR PNL MLDG (RAD AIR SI DFL)	93–95	F (L32, C60)	4	411700

cardiagn.com

6.		8.950	**RETAINER–RKR PNL MLDG** (RAD AIR LWR SEAL) (PART OF 7) (DELETED FROM PRODUCTION MID 1994)	93–95	F	2	411700
7.	2–B21	1.274	**SEAL**, RAD AIR LWR (INCLS 6) (DELETED FROM PRODUCTION MID 1994.)	93–95	F (LT1, C60)	1	10217826
8.	2–B20	1.270	**INSULATOR**, RAD LWR	93–95	F	LH	10278679
9.	2–B21	1.272	**NUT**, RAD AIR LWR DFL (USED ON EARLY 1993 MODELS ONLY.) (M6.3 X 1.81) (2.485)	93	F	10	10079170
		N.S.	**NUT**, RAD AIR LWR DFL (USED ON EARLY 1993 MODELS ONLY.)	94–95	.....		10079170
10.	2–N22	7.833	**DEFLECTOR**, F/END FASCIA OTR	93–95	F	RH	10297290
	2–N22	7.833	**DEFLECTOR**, F/END FASCIA OTR	93–95	F	LH	10297291
11.	2–N21	7.831	**RETAINER**, FRT BPR FASCIA (PUSH IN) (28.2MM LG)	93–95	F	3	22542705
12.	2–N22	7.833	**RETAINER**, FRT BPR FASCIA LWR DFL (USED IN 1993 ONLY) (1994 & LATER HAS CLIP PART OF DFL ONLY) (2.483)	93	F	2	14101262
13.		8.977	**SCREW**, 6.3X1.81X20 (RAD AIR LWR BFL)	93–95	F	2	11509051
14.		8.977	**SCREW**, 6.3X1.81X20 (FRT BPR FASCIA LWR DFL)	93–95	F	8	11509051
15.		8.977	**SCREW**, HEX TAP M6.3X1.81X20 W/FL WA PH ORG (RAD AIR LWR DFL)	93–95	F	12	11504037
16.	2–B21	1.272	**DEFLECTOR**, RAD AIR LWR	93–95	F	1	10229657
17.	2–B21	1.272	**BAFFLE**, RAD AIR LWR	93–95	F (C60) (EXC V76)	1	10242723
	2–B21	1.272	**BAFFLE**, RAD AIR LWR	93–95	F (C60, V76) (EXPORT)	1	10242724
18.	2–B20	1.270	**INSULATOR**, RAD LWR	93–95	F	RH	10188023
19.	2–B21	1.276	**RETAINER**, RAD AIR UPR BFL (PART OF 20) (CHRISTMAS TREE TYPE) (14.731)	93–95	F (C60)	2	20387349
20.	2–N28	9.190	**CONDENSER**, A/C (INCLS 19) (AC–DELCO #15–6705)	93–95	F (C60)	1	52460894
21.	2–B17	1.219	**RADIATOR**, (CODE FU, FY, H8) (SEE "RADIATOR ASM" IN GRP 1.000 FOR ILLUSTRATED VIEW) (AC–DELCO #20700)	93	F (LT1, MD8, M28, M29)	1	52466004
	2–B17	1.219	**RADIATOR**, (CODE FU, FY, H8) (SEE "RADIATOR ASM" IN GRP 1.000 FOR ILLUSTRATED VIEW) (AC–DELCO #20700)	94–95	F (LT1, M30, MM6)	1	52466004
	2–B17	1.219	**RADIATOR**, (CODE HZ) (SEE "RADIATOR ASM" IN GRP 1.000 FOR ILLUSTRATED VIEW) (AC–DELCO #20850)	95	F (L36)	1	52470330
	2–B17	1.219	**RADIATOR**, (CODE HZ, FJ) (SEE "RADIATOR ASM" IN GRP 1.000 FOR ILLUSTRATED VIEW) (AC–DELCO #20850)	93–95	F (L32)	1	52470330
22.	2–B21	1.272	**BAFFLE**, RAD AIR UPR	93–95	F (C60)	1	10243962
23.	2–B21	1.271	**BOLT**, RAD UPR MT PNL (8.977) .	93–95	F	3	11515499
24.	2–N22	8.808	**LABEL**, FAN BLADE CAUTION ..	93–94	F	1	10188093

cardiagn.com

2-N22	8.808	LABEL, FAN BLADE & INFL RST & ENG CLG & A/C REFRIG CAUTION	95	F	1	10260657
2-N22	8.808	LABEL, FAN BLADE & INFL RST & ENG CLG & A/C REFRIG CAUTION	95	F	1	10288155

RPO DEFINITIONS

C60 – AIR CONDITIONER,FRONT,MANUAL CONTROLS
LT1 – ENGINE–GAS, 8 CYL, 5.7L(5.7P),MFI,HO
L32 – ENGINE,3.4L,V6,(3.4S),SFI,OHV
L36 – ENGINE GAS, 6 CYL, 3.8K, MFI, V6, HO (ERV6 SERIES)
MD8 – TRANSMISSION,AUTOMATIC 4–SPEED(THM700R4/4L60)
MM6 – TRANSMISSION MAN 6 SPD, BORG WARNER, 85MM, 1ST 2.66, 6TH 0.50, O/D
M28 – TRANSMISSION MAN, 6 SPD, BORG WARNER, 85MM, 3.36 1ST, 1.35 3RD
M29 – TRANSMISSION MAN, 6 SPD, BORG WARNER, 85MM, 2.97 1ST, 1.44 3RD
M30 – TRANSMISSION,AUTOMATIC 4 SPEED,4L60E,ELECTRONIC
V76 – HOOK,FRONT TOW

cardiagn.com

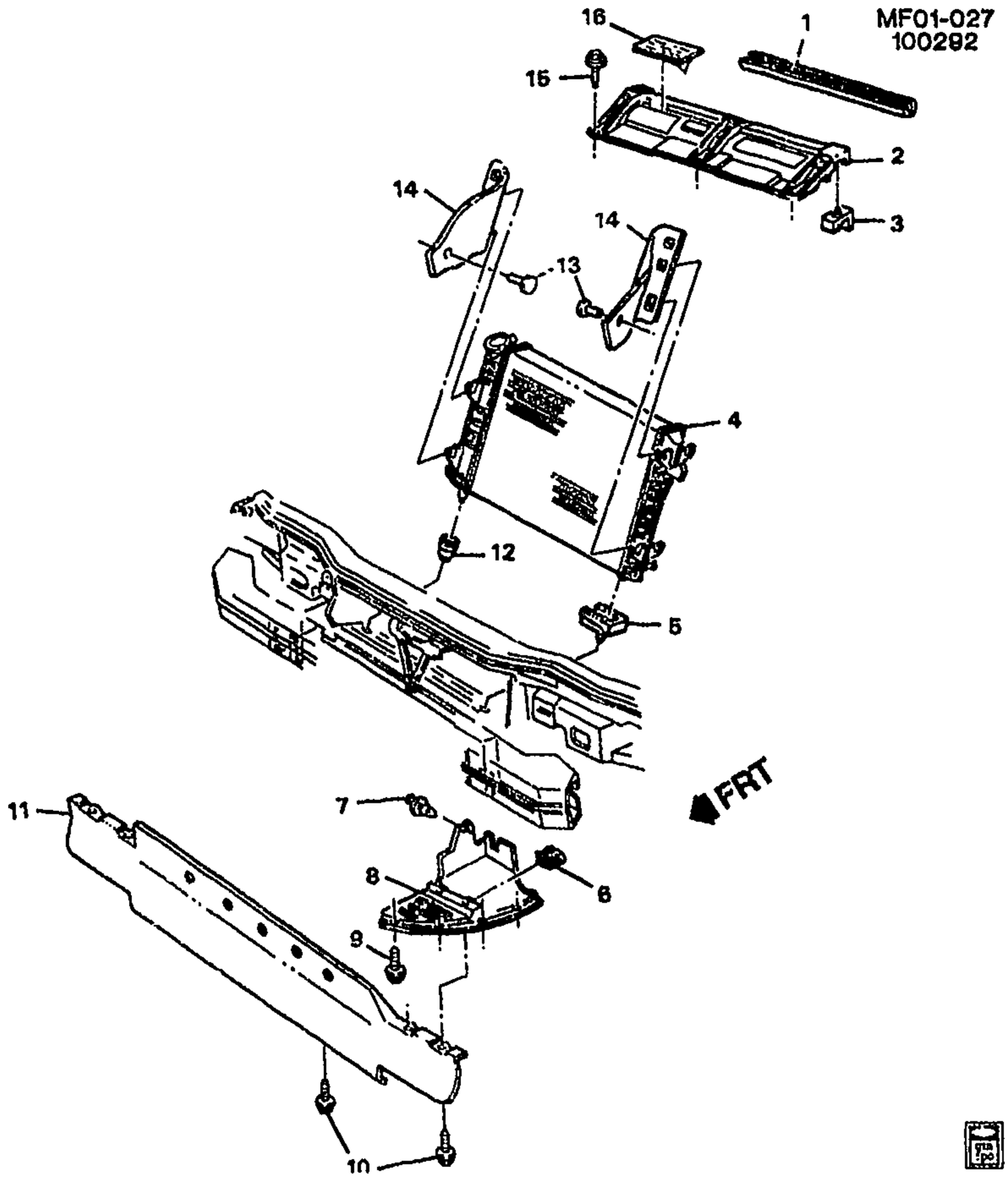

MF01-027

1993-1995 F RADIATOR MOUNTING & RELATED PARTS (C41,EXC 1LE)
1996 F RADIATOR MOUNTING & RELATED PARTS (C41)

1.	2-B20	1.270	INSULATOR, RAD UPR MTG PNL	93-96	F	1	10233521
2.	2-B20	1.270	PANEL, RAD UPR MTG	93-95	F	1	10262963
	2-B20	1.270	PANEL, RAD UPR MTG	96	F	1	10288156
3.	2-B20	1.270	INSULATOR, RAD UPR	93-96	F	2	10188026
4.	2-B17	1.219	RADIATOR, (CODE BD) (SEE GRP 1.000 "RADIATOR ASM" FOR DETAILED ILLUSTRATED VIEW) (AC-DELCO #20850)	96	F (L36 M30)	1	52470330
	2-B17	1.219	RADIATOR, (CODE FU, FY, H8) (SEE GRP 1.000 "RADIATOR ASM" FOR DETAILED ILLUSTRATED VIEW) (AC-DELCO #20700)	93	F (LT1, MD8, M28, M29)	1	52466004

cardiagn.com

	2-B17	1.219	RADIATOR, (CODE FU, FY, H8) (SEE GRP 1.000 "RADIATOR ASM" FOR DETAILED ILLUSTRATED VIEW) (AC-DELCO #20700)	94-96	F (LT1, M30, MM6)	1	52466004
	2-B17	1.219	RADIATOR, (CODE F8) (SEE GRP 1.000 "RADIATOR ASM" FOR DETAILED ILLUSTRATED VIEW) (AC-DELCO #20849)	96	F (L36, M49)	1	52470329
	2-B17	1.219	RADIATOR, (CODE HZ) (SEE GRP 1.000 "RADIATOR ASM" FOR DETAILED ILLUSTRATED VIEW) (AC-DELCO #20850)	95	F (L36)	1	52470330
	2-B17	1.219	RADIATOR, (CODE HZ, FJ) (SEE GRP 1.000 "RADIATOR ASM" FOR DETAILED ILLUSTRATED VIEW) (AC-DELCO #20850)	93-95	F (L32)	1	52470330
5.	2-B20	1.270	INSULATOR, RAD LWR	93-96	F	LH	10278679
6.	2-B21	1.272	NUT, RAD AIR LWR DFL (USED ON EARLY 1993 MODELS ONLY.) (M6.3 X 1.81) (2.485)	93	F	10	10079170
7.	2-N22	7.833	RETAINER, FRT BPR FASCIA LWR DFL (USED IN 1993) (1994 & LATER HAS A CLIP THAT IS PART OF DFL) (2.483)	93	F	2	14101262
8.	2-N22	7.833	DEFLECTOR, F/END FASCIA OTR	93-96	F	RH	10297290
	2-N22	7.833	DEFLECTOR, F/END FASCIA OTR	93-96	F	LH	10297291
9.		8.977	SCREW, 6.3X1.81X20 (FRT BPR FASCIA LWR DFL)	93-96	.....	8	11509051
10.		8.977	SCREW, HEX TAP M6.3X1.81X20 W/FL WA PH ORG (RAD AIR LWR DFL)	93-96	.....	12	11504037
11.	2-B21	1.272	DEFLECTOR, RAD AIR LWR	93-96	F	1	10229657
12.	2-B20	1.270	INSULATOR, RAD LWR	93-96	F	RH	10188023
13.		8.950	RETAINER-RKR PNL MLDG (RAD AIR SI BFL (PUSH-IN) USED ON EARLY 1993 MODELS ONLY.)	93-95	(L32)	2	411700
14.		N.S.	BAFFLE, RAD AIR SI (USED ON EARLY 1993 MODELS ONLY.)	93	.....		
15.	2-B21	1.271	BOLT, RAD UPR MT PNL (8.977) .	93-96	F	3	11515499
16.	2-N22	8.808	LABEL, FAN BLADE CAUTION ..	93-94	F	1	10188093
	2-N22	8.808	LABEL, FAN BLADE & INFL RST & ENG CLG & A/C REFRIG CAUTION	93-95	F	1	10260657
	2-N22	8.808	LABEL, FAN BLADE & INFL RST & ENG CLG & A/C REFRIG CAUTION	95-96	F	1	10288155

RPO DEFINITIONS

C41 – HEATER,OUTSIDE AIR,WITH FAN AND DEFROSTER
LT1 – ENGINE-GAS, 8 CYL, 5.7L(5.7P),MFI,HO
L32 – ENGINE,3.4L,V6,(3.4S),SFI,OHV
L36 – ENGINE GAS, 6 CYL, 3.8K, MFI, V6, HO (ERV6 SERIES)
MD8 – TRANSMISSION,AUTOMATIC 4-SPEED(THM700R4/4L60)
MM6 – TRANSMISSION MAN 6 SPD, BORG WARNER, 85MM, 1ST 2.66, 6TH 0.50, O/D

cardiagn.com

M28 – TRANSMISSION MAN, 6 SPD, BORG WARNER, 85MM, 3.36 1ST, 1.35 3RD
M29 – TRANSMISSION MAN, 6 SPD, BORG WARNER, 85MM, 2.97 1ST, 1.44 3RD
M30 – TRANSMISSION,AUTOMATIC 4 SPEED,4L60E,ELECTRONIC
M49 – TRANSMISSION MAN 5 SPD, BORG WARNER, 77MM, 3.75 1ST, .76 5TH, O/D
1LE – PERFORMANCE PACKAGE COMPONENTS

cardiagn.com

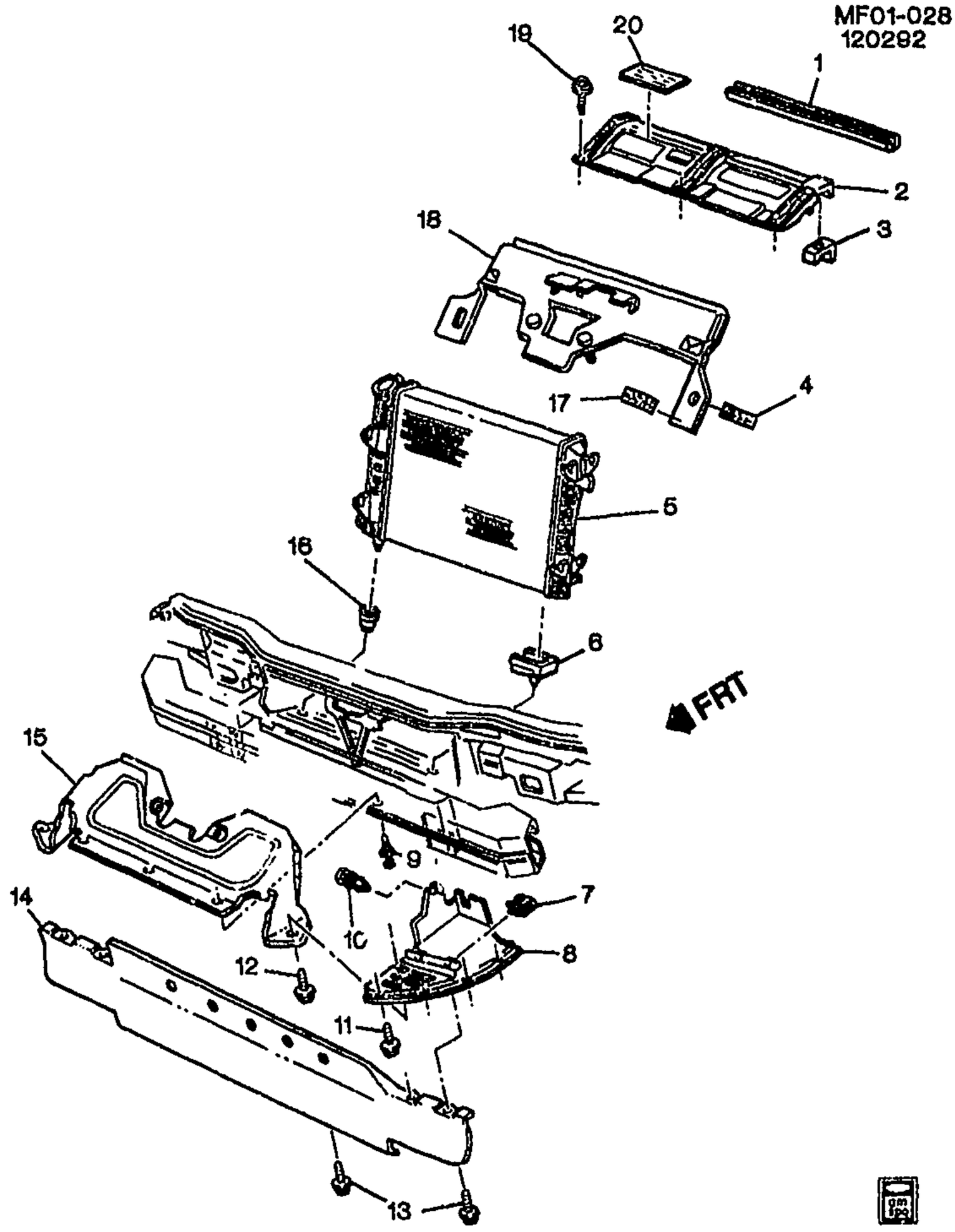

MF01-028

1993-1995 F RADIATOR MOUNTING & RELATED PARTS (C41,1LE)

1.	2-B20	1.270	INSULATOR, RAD UPR MTG PNL	93-95	F	1	10233521
2.	2-B20	1.270	PANEL, RAD UPR MTG	93-95	F	1	10262963
3.	2-B20	1.270	INSULATOR, RAD UPR	93-95	F	2	10188026
4.		N.S.	SPACER, RAD AIR UPR BFL		.....		
5.	2-B17	1.219	RADIATOR, (CODE FU, FY, H8) (SEE GRP 1.000 "RADIATOR ASM" FOR DETAILED ILLUSTRATED VIEW) (AC-DELCO #20700)	93	F (LT1, MD8, M28, M29)	1	52466004

cardiagn.com

	2-B17	1.219	RADIATOR, (CODE FU, FY, H8) (SEE GRP 1.000 "RADIATOR ASM" FOR DETAILED ILLUSTRATED VIEW) (AC-DELCO #20700)	94-95	F (LT1, M30, MM6)	1	52466004
	2-B17	1.219	RADIATOR, (CODE HZ) (SEE GRP 1.000 "RADIATOR ASM" FOR DETAILED ILLUSTRATED VIEW) (AC-DELCO #20850)	95	F (L36)	1	52470330
	2-B17	1.219	RADIATOR, (CODE HZ, FJ) (SEE GRP 1.000 "RADIATOR ASM" FOR DETAILED ILLUSTRATED VIEW) (AC-DELCO #20850)	93-95	F (L32)	1	52470330
6.	2-B20	1.270	INSULATOR, RAD LWR	93-95	F	LH	10278679
7.	2-B21	1.272	NUT, RAD AIR LWR DFL (USED ON EARLY 1993 MODELS ONLY) (M6.3 X 1.81) (2.485)	93	F	10	10079170
8.	2-N22	7.833	DEFLECTOR, F/END FASCIA OTR	93-95	F	RH	10297290
	2-N22	7.833	DEFLECTOR, F/END FASCIA OTR	93-95	F	LH	10297291
9.	2-N21	7.831	RETAINER, FRT BPR FASCIA (PUSH IN) (28.2MM LG)	93-95	F	3	22542705
10.	2-N22	7.833	RETAINER, FRT BPR FASCIA LWR DFL (USED ON EARLY 1993 MODELS ONLY) (2.483)	93	F	2	14101262
11.		8.977	SCREW, 6.3X1.81X20 (FRT BPR FASCIA LWR DFL)	93-95	.....	8	11509051
12.		8.977	SCREW, 6.3X1.81X20 (RAD AIR LWR BFL)	93-95	.....	2	11509051
13.		8.977	SCREW, HEX TAP M6.3X1.81X20 W/FL WA PH ORG (RAD AIR LWR DFL)	93-95	.....	12	11504037
14.	2-B21	1.272	DEFLECTOR, RAD AIR LWR	93-95	F	1	10228657
15.	2-B21	1.272	BAFFLE, RAD AIR LWR	93-95	F (1LE)	1	10242723
16.	2-B20	1.270	INSULATOR, RAD LWR	93-95	F	RH	10188023
17.		N.S.	SPACER, RAD AIR UPR BFL		.....		
18.	2-B21	1.272	BAFFLE, RAD AIR UPR	93-95	F (1LE)	1	10243962
19.	2-B21	1.271	BOLT, RAD UPR MT PNL (8.977) .	93-95	F	3	11515499
20.	2-N22	8.808	LABEL, FAN BLADE CAUTION ..	93-94	F	1	10188093
	2-N22	8.808	LABEL, FAN BLADE & INFL RST & ENG CLG & A/C REFRIG CAUTION	95	F	1	10280657
	2-N22	8.808	LABEL, FAN BLADE & INFL RST & ENG CLG & A/C REFRIG CAUTION	95	F	1	10288155

RPO DEFINITIONS

C41 – HEATER,OUTSIDE AIR,WITH FAN AND DEFROSTER
LT1 – ENGINE-GAS, 8 CYL, 5.7L(5.7P),MFI,HO
L32 – ENGINE,3.4L,V6,(3.4S),SFI,OHV
L36 – ENGINE GAS, 6 CYL, 3.8K, MFI, V6, HO (ERV6 SERIES)
MD8 – TRANSMISSION,AUTOMATIC 4-SPEED(THM700R4/4L60)
MM6 – TRANSMISSION MAN 6 SPD, BORG WARNER, 85MM, 1ST 2.66, 6TH 0.50, O/D
M28 – TRANSMISSION MAN, 6 SPD, BORG WARNER, 85MM, 3.36 1ST, 1.35 3RD
M29 – TRANSMISSION MAN, 6 SPD, BORG WARNER, 85MM, 2.97 1ST, 1.44 3RD
M30 – TRANSMISSION,AUTOMATIC 4 SPEED,4L60E,ELECTRONIC
1LE – PERFORMANCE PACKAGE COMPONENTS

cardiagn.com

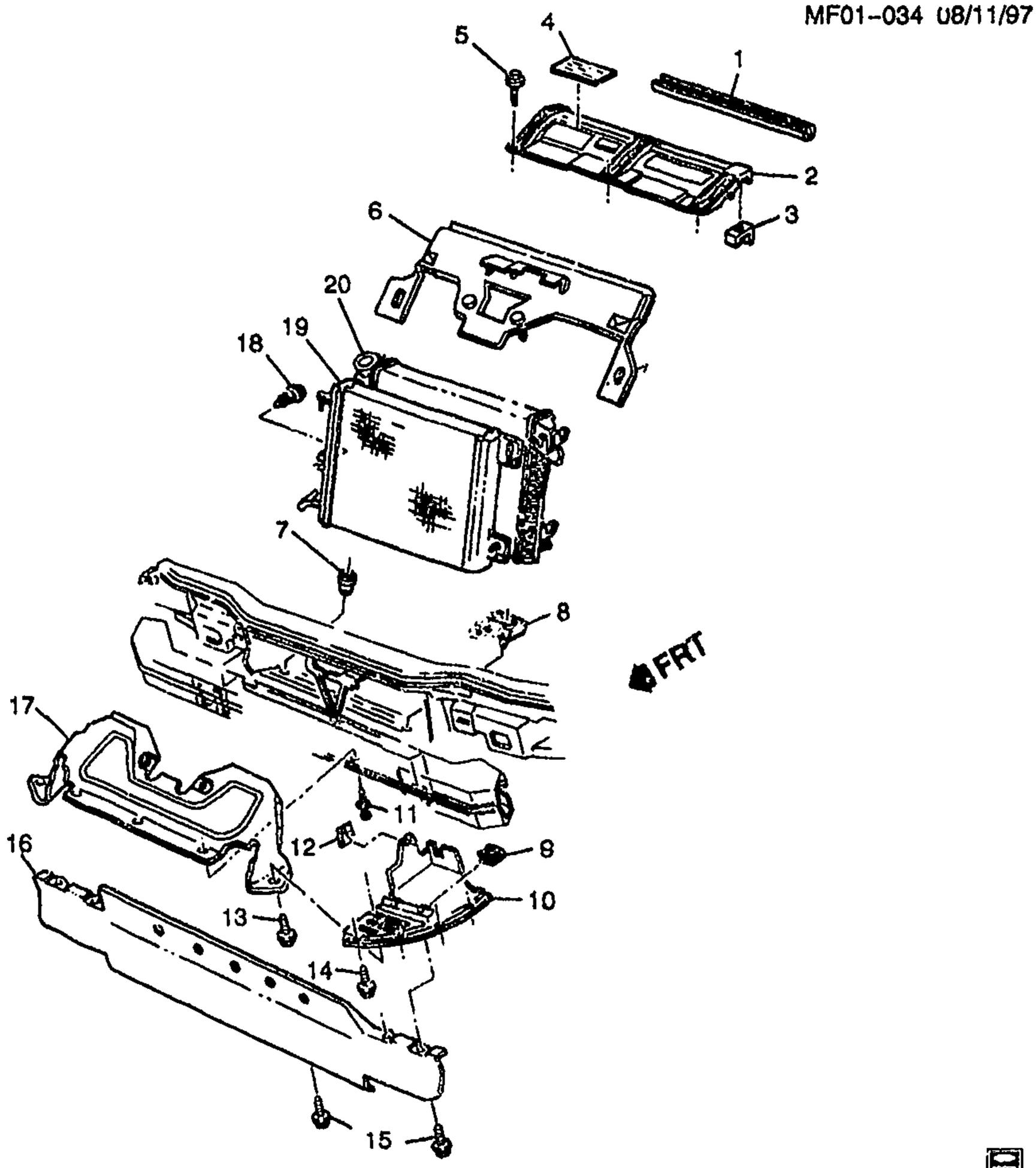

MF01-034

1988-1997 F RADIATOR MOUNTING & RELATED PARTS (C60)

1.	2-B20	1.270	INSULATOR, RAD UPR MTG PNL	96-97	F	1	10233521
2.	2-B20	1.270	PANEL, RAD UPR MTG	96-97	F	1	10288156
3.	2-B20	1.270	INSULATOR, RAD UPR	96-97	F	2	10188026
4.	2-N22	8.808	LABEL, FAN BLADE & INFL RST & ENG CLG & A/C REFRIG CAUTION	96-97	F	1	10288155
5.	2-B21	1.271	BOLT, RAD UPR MT PNL (8.977)	96-97	F	3	11515499
6.	2-B21	1.272	BAFFLE, RAD AIR UPR	96-97	F (C60)	1	10243962
7.	2-B20	1.270	INSULATOR, RAD LWR	96-97	F	RH	10188023
8.	2-B20	1.270	INSULATOR, RAD LWR	96-97	F	LH	10278679

cardiagn.com

9.		N.S.	NUT, RAD AIR LWR DFL (PART OF 10)					
10.	2-N22	7.833	DEFLECTOR, F/END FASCIA OTR (INCLS 9, 12)	96-97	F	RH		10297290
	2-N22	7.833	DEFLECTOR, F/END FASCIA OTR (INCLS 9, 12)	96-97	F	LH		10297291
11.	2-N21	7.831	RETAINER, FRT BPR FASCIA (PUSH IN) (28.2MM LG)	96-97	F		3	22542705
12.		N.S.	RETAINER, FRT BPR FASCIA LWR DFL (S-CLIP) (PART OF 10)					
13.		8.977	SCREW, 6.3X1.81X20 (RAD AIR LWR BFL)	96-97	F		2	11509051
14.		8.900	BOLT, (FRT BPR FASCIA LWR DFL)	96-97	F		8	20351035
15.		8.977	SCREW, HEX TAP M6.3X1.81X20 W/FL WA PH ORG (RAD AIR LWR DFL)	96-97	F		12	11504037
16.	2-B21	1.272	DEFLECTOR, RAD AIR LWR	96-97	F		1	10229657
17.	2-B21	1.272	BAFFLE, RAD AIR LWR	96-97	F (C60) (EXC V76)		1	10242723
	2-B21	1.272	BAFFLE, RAD AIR LWR	96-97	F (C60, V76) (EXPORT)		1	10242724
18.	2-B21	1.276	RETAINER, RAD AIR UPR BFL (PART OF 19) (CHRISTMAS TREE TYPE) (14.731)	96-97	F (C60)		2	20387349
19.	2-N28	9.190	CONDENSER, A/C (INCLS 18) (AC-DELCO #15-6705)	96-97	F (C60)		1	52460894
20.	2-B17	1.219	RADIATOR, (CODE BD) (SEE "RADIATOR ASM" IN GRP 1.000 FOR ILLUSTRATED VIEW) (AC-DELCO #20850)	96-97	F (L36, M30)		1	52470330
	2-B17	1.219	RADIATOR, (CODE FU, FY, H8) (SEE "RADIATOR ASM" IN GRP 1.000 FOR ILLUSTRATED VIEW) (AC-DELCO #20700)	96	F (LT1, M30, MM6)		1	52466004
	2-B17	1.219	RADIATOR, (CODE F8) (SEE "RADIATOR ASM" IN GRP 1.000 FOR ILLUSTRATED VIEW) (AC-DELCO #20849)	96-97	F (L36, M49)		1	52470329
	2-B17	1.219	RADIATOR, (CODE MC) (SEE "RADIATOR ASM" IN GRP 1.000 FOR ILLUSTRATED VIEW) (AC-DELCO #20883)	97	F (LT1, MM6)		1	52472602
	2-B17	1.219	RADIATOR, (CODE MC) (SEE "RADIATOR ASM" IN GRP 1.000 FOR ILLUSTRATED VIEW) (AC-DELCO #20883)	97	F (LT1, M30)		1	52472602

RPO DEFINITIONS

C60 – AIR CONDITIONER,FRONT,MANUAL CONTROLS
LT1 – ENGINE-GAS, 8 CYL, 5.7L(5.7P),MFI,HO
L36 – ENGINE GAS, 6 CYL, 3.8K, MFI, V6, HO (ERV6 SERIES)
MM6 – TRANSMISSION MAN 6 SPD, BORG WARNER, 85MM, 1ST 2.66, 6TH 0.50, O/D
M30 – TRANSMISSION,AUTOMATIC 4 SPEED,4L60E,ELECTRONIC
M49 – TRANSMISSION MAN 5 SPD, BORG WARNER, 77MM, 3.75 1ST, .76 5TH, O/D
V76 – HOOK,FRONT TOW

cardiagn.com

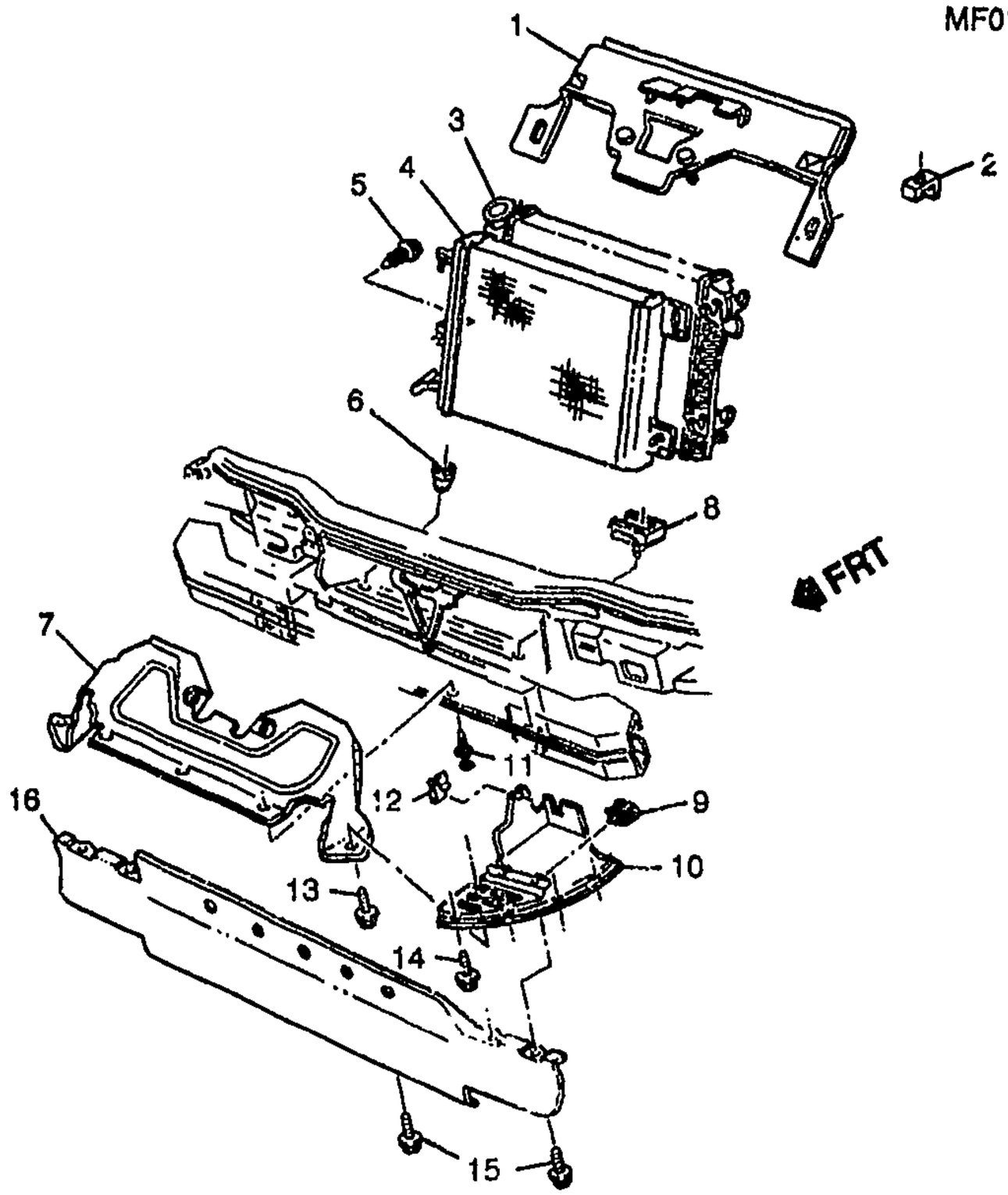

MF01-035

1998-2002 F RADIATOR MOUNTING & RELATED PARTS

1.	2-B21	1.272	BAFFLE, RAD AIR UPR	98-02	F (C60)	1	10409095
2.	2-B20	1.270	INSULATOR, RAD UPR	98-02	F	2	10188026
3.	2-B17	1.219	RADIATOR, (SEE "RADIATOR ASM" IN GRP 1.000 FOR ILLUSTRATED VIEW) (AC-DELCO #21341)	00-02	F (L36, M30)	1	52486939
	2-B17	1.219	RADIATOR, (SEE "RADIATOR ASM" IN GRP 1.000 FOR ILLUSTRATED VIEW) (AC-DELCO #21342)	00-02	F (L36, M49)	1	52486940
	2-B17	1.219	RADIATOR, (SEE "RADIATOR ASM" IN GRP 1.000 FOR ILLUSTRATED VIEW) (AC-DELCO #21344)	00-02	F (LS1, MM6)	1	52487149
	2-B17	1.219	RADIATOR, (SEE "RADIATOR ASM" IN GRP 1.000 FOR ILLUSTRATED VIEW) (AC-DELCO #21345)	00-02	F (LS1, M30)	1	52487150

cardiagn.com

	2-B17	1.219	**RADIATOR**, (CODE BY) (SEE "RADIATOR ASM" IN GRP 1.000 FOR ILLUSTRATED VIEW) (AC--DELCO #20929)	98-99	F (L36, M49)	1	52473158
	2-B17	1.219	**RADIATOR**, (CODE C2) (SEE "RADIATOR ASM" IN GRP 1.000 FOR ILLUSTRATED VIEW) (AC-DELCO #20930)	98-99	F (L36, M30)	1	52473159
	2-B17	1.219	**RADIATOR**, (CODE HA) (SEE "RADIATOR ASM" IN GRP 1.000 FOR ILLUSTRATED VIEW) (AC-DELCO #20924)	98-99	F (LS1, MM6)	1	52471356
	2-B17	1.219	**RADIATOR**, (CODE JE) (SEE "RADIATOR ASM" IN GRP 1.000 FOR ILLUSTRATED VIEW) (AC-DELCO #20925)	98-99	F (LS1, M30)	1	52471357
4.	2-N28	9.190	**CONDENSER**, A/C (INCLS 5) (AC-DELCO #15-6940)	98-02	F (C60)	1	52472662
5.	2-B21	1.276	**RETAINER**, RAD AIR UPR BFL (PART OF 4) (CHRISTMAS TREE TYPE) (14.731)	98-02	F (C60)	2	20387349
6.	2-B20	1.270	**INSULATOR**, RAD LWR	98-02	F	RH	10188023
7.	2-B21	1.272	**BAFFLE**, RAD AIR LWR	98-02	F (C60) (EXC V76)	1	10242723
	2-B21	1.272	**BAFFLE**, RAD AIR LWR	98-02	F (C60, V76) (EXPORT)	1	10242724
8.	2-B20	1.270	**INSULATOR**, RAD LWR	98-02	F	LH	10278679
9.		8.921	**NUT**, SPRING M6X1 TYPE-C, U-SHAPE MULTI THD STYLE-1 PC (PART OF 10)	98-02	....	AR	11503957
10.	2-N22	7.833	**DEFLECTOR**, F/END FASCIA OTR (INCLS 9, 12)	98-02	F	RH	10297290
	2-N22	7.833	**DEFLECTOR**, F/END FASCIA OTR (INCLS 9, 12)	98-02	F	LH	10297291
11.	2-N21	7.831	**RETAINER**, FRT BPR FASCIA (PUSH IN) (28.2MM LG)	98-02	F	3	22542705
12.	2-N22	7.833	**RETAINER**, FRT BPR FASCIA LWR DFL (PART OF 10) (2.483) ..	98-02	F	2	14101262
13.		8.977	**SCREW**, 6.3X1.81X20 (RAD AIR LWR BFL)	98-02	F	2	11509051
14.		8.977	**SCREW**, 6.3X1.81X20 (FRT BPR FASCIA LWR DFL)	98-02	F	8	11509051
15.		8.977	**SCREW**, HEX TAP M6.3X1.81X20 W/FL WA PH ORG (RAD AIR LWR DFL)	98-02	F	12	11504037
16.	2-B21	1.272	**DEFLECTOR**, RAD AIR LWR	98-02	F	1	10229657

RPO DEFINITIONS

C60 – AIR CONDITIONER,FRONT,MANUAL CONTROLS
LS1 – ENGINE GAS, 8 CYL, 5.7L, SFI, ALUMINUM ENGINE
L36 – ENGINE GAS, 6 CYL, 3.8K, MFI, V6, HO (ERV6 SERIES)
MM6 – TRANSMISSION MAN 6 SPD, BORG WARNER, 85MM, 1ST 2.66, 6TH 0.50, O/D
M30 – TRANSMISSION,AUTOMATIC 4 SPEED,4L60E,ELECTRONIC
M49 – TRANSMISSION MAN 5 SPD, BORG WARNER, 77MM, 3.75 1ST, .76 5TH, O/D
V76 – HOOK,FRONT TOW

cardiagn.com

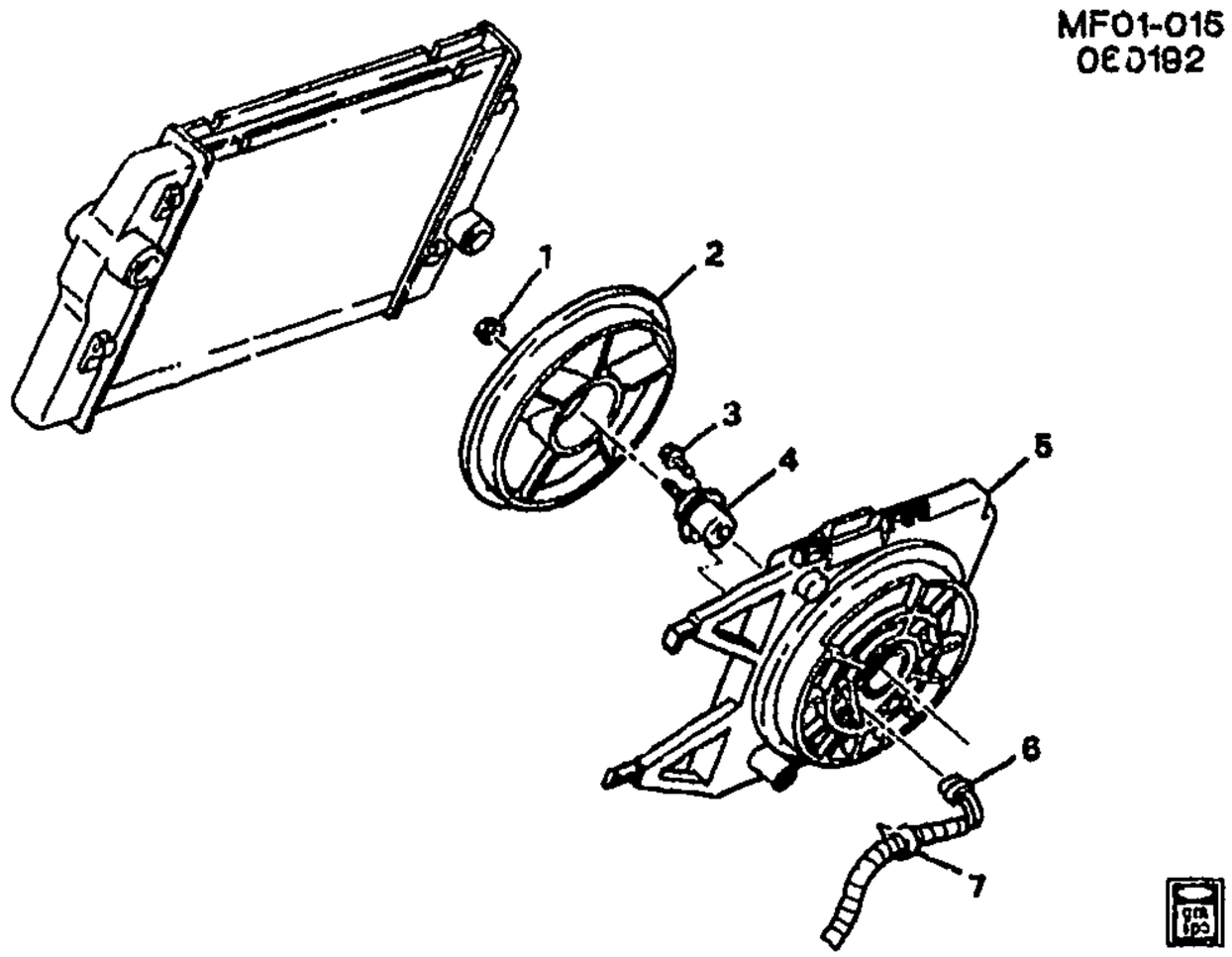

1993-1995 F ENGINE COOLANT FAN (SINGLE FAN)

1.	2-B8	1.055	NUT, ENG COOL FAN BLADE (M8X1.25 LH THD, USE W/CLOCKWISE ROTATION MOTORS) (AC-DELCO #22082538)	93-95	F (LT1, C41)	1	22082538
	2-B8	1.055	NUT, ENG COOL FAN BLADE (M8X1.25 LH THD, USE W/CLOCKWISE ROTATION MOTORS) (AC-DELCO #22082538)	93-95	F (L32)	1	22082538
2.	2-B8	1.055	FAN KIT, ENG ELEC COOL (AC-DELCO #15-8476)	93-95	F (LT1, C41)	1	22098793
	2-B8	1.055	FAN KIT, ENG ELEC COOL (AC-DELCO #15-8476)	93-95	F (L32)	1	22098793
3.	2-B8	1.055	BOLT KIT, ENG COOL FAN MOT (W/WA, MOT MTG, CONTAINS 3 BOLTS)	93-95	F (LT1, C41)	1	22062547
	2-B8	1.055	BOLT KIT, ENG COOL FAN MOT (W/WA, MOT MTG, CONTAINS 3 BOLTS)	93-95	F (L32)	1	22062547
4.	2-B8	1.055	MOTOR KIT, ENG COOL FAN (AC-DELCO #15-8500)	93-94	F	RH	22137598
	2-B8	1.055	MOTOR KIT, ENG COOL FAN (AC-DELCO #15-8498)	93	F (LT1, C41)	1	22137318
	2-B8	1.055	MOTOR KIT, ENG COOL FAN (AC-DELCO #15-8498)	93	F (L32)	1	22137318
	2-B8	1.055	MOTOR KIT, ENG COOL FAN (AC-DELCO #15-8562)	94	F (LT1, C41)	1	22136897
	2-B8	1.055	MOTOR KIT, ENG COOL FAN (AC-DELCO #15-8562)	94	F (L32)	1	22136897

cardiagn.com

	2-B8	1.055	MOTOR KIT, ENG COOL FAN (ID BY 22136544 ON MOTOR; 2ND DES SEE 12368625) (AC-DELCO #15-8562)	95	F (LT1, C41) (1ST DES)	1	22136897
	2-B8	1.055	MOTOR KIT, ENG COOL FAN (ID BY 22136544 ON MOTOR; 2ND DES SEE 12368625) (AC-DELCO #15-8562)	95	F (L32) (1ST DES)	1	22136897
	2-B8	1.055	MOTOR KIT, ENG COOL FAN (ID BY 22137220, 1ST DES SEE 22136897) (AC-DELCO #15-8757)	95	F (LT1, C41) (2ND DES)	1	12368625
	2-B8	1.055	MOTOR KIT, ENG COOL FAN (ID BY 22137220, 1ST DES SEE 22136897) (AC-DELCO #15-8757)	95	F (L32) (2ND DES)	1	12368625
5.	2-B8	1.055	BRACKET, ENG COOL FAN	93-95	F (LT1, C41)	1	22125221
	2-B8	1.055	BRACKET, ENG COOL FAN	93-95	F (L32)	1	22125221
6.	2-B8	1.055	CONNECTOR, MOT-ENG COOL FAN (OVAL) (2-WAY F) (W/LEADS) (2.535) (AC-DELCO #PT189)	93-95	F	1	12101917
7.		N.S.	CLIP, FWD LP WRG HARN		.....		

RPO DEFINITIONS
C41 – HEATER,OUTSIDE AIR,WITH FAN AND DEFROSTER
LT1 – ENGINE-GAS, 8 CYL, 5.7L(5.7P),MFI,HO
L32 – ENGINE,3.4L,V6,(3.4S),3FI,OHV

cardiagn.com

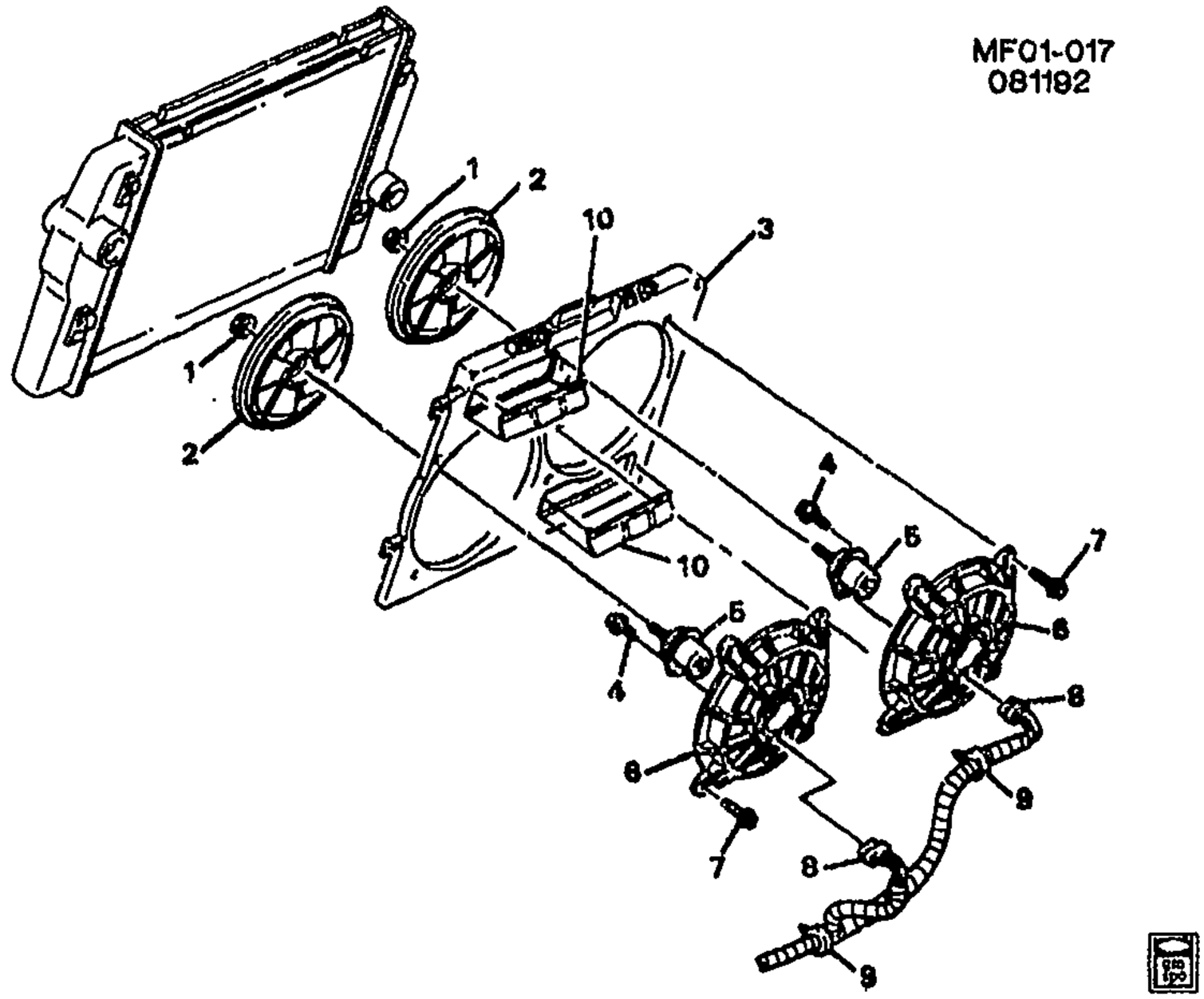

MF01-017

1993–2002 F ENGINE COOLANT FAN (DUAL FAN)

1.	2-B8	1.055	NUT, ENG COOL FAN BLADE (M8X1.25 LH THD, USE W/CLOCKWISE ROTATION MOTORS) (AC-DELCO #22082538)	98-02	F (LS1)	2	22082538
	2-B8	1.055	NUT, ENG COOL FAN BLADE (RIGHT & LEFT SI) (M8X1.25 LH THD, USE W/CLOCKWISE ROTATION MOTORS) (AC-DELCO #22082538)	93-97	F (LT1, C60)	2	22082538
	2-B8	1.055	NUT, ENG COOL FAN BLADE (RIGHT & LEFT SI) (M8X1.25 LH THD, USE W/CLOCKWISE ROTATION MOTORS) (AC-DELCO #22082538)	95-02	F (L36)	2	22082538
2.	2-B8	1.055	FAN KIT, ENG ELEC COOL (AC-DELCO #15-8470)	95-02	F (L36)	LH	22098787
	2-B8	1.055	FAN KIT, ENG ELEC COOL (AC-DELCO #15-8470)	98-02	F (LS1)	LH	22098787
	2-B8	1.055	FAN KIT, ENG ELEC COOL (RIGHT & LEFT SIDE) (AC-DELCO #15-8470)	93-97	F (LT1, C60)	1	22098787
3.	2-B21	1.277	SHROUD KIT, ENG ELEC COOL FAN (INCLS 7)	93-97	F (LT1, C60)	1	22125220
	2-B21	1.277	SHROUD KIT, ENG ELEC COOL FAN (INCLS 7)	95-97	F (L36)	1	22125220

cardiagn.com

	2-B21	1.277	SHROUD KIT, ENG ELEC COOL FAN (INCLS 7)	98-02	F (LS1)	1	12365307
	2-B21	1.277	SHROUD KIT, ENG ELEC COOL FAN (INCLS 7)	98-02	F (L36)	1	12365307
4.	2-B8	1.055	BOLT KIT, ENG COOL FAN MOT (W/WA. MOT MTG, CONTAINS 3 BOLTS)	95-02	F (L36)	2	22062547
	2-B8	1.055	BOLT KIT, ENG COOL FAN MOT (W/WA, MOT MTG, CONTAINS 3 BOLTS)	98-02	F (LS1)	2	22062547
	2-B8	1.055	BOLT KIT, ENG COOL FAN MOT (RIGHT & LEFT SI) (W/WA, MOT MTG, CONTAINS 3 BOLTS)	93-97	F (LT1, C60)	2	22062547
5.	2-B8	1.055	MOTOR KIT, ENG COOL FAN (AC-DELCO #15-8500)	93-94	F	RH	22137598
	2-B8	1.055	MOTOR KIT, ENG COOL FAN (AC-DELCO #15-8500)	95-02	F (L36)	RH	22137598
	2-B8	1.055	MOTOR KIT, ENG COOL FAN (AC-DELCO #15-8404)	96-97	F (LT1, C60)	RH	22104439
	2-B8	1.055	MOTOR KIT, ENG COOL FAN (AC-DELCO #15-8404)	98-02	F (LS1)	RH	22104439
	2-B8	1.055	MOTOR KIT, ENG COOL FAN (RIGHT & LEFT SI) (AC-DELCO #15-8563)	93-95	F (LT1, C60)	2	22137319
6.	2-B8	1.055	BRACKET, ENG COOL FAN (RIGHT & LEFT SI)	93-97	F (LT1, C60)	2	22125219
	2-B8	1.055	BRACKET, ENG COOL FAN (RIGHT & LEFT SI)	95-97	F (L36)	2	22125219
	2-B8	1.055	FAN KIT, ENG ELEC COOL (AC-DELCO #15-8470)	95-02	F	2	22098787
7.		8.900	BOLT ASM, HEX W/CON WA, M6X1X25, 17 OD, FULL THD, AC PT, 9.8, CD CHROMATE BLK (ENG COOL FAN BRKT) (PART OF 3)	93-02	F	8	11509363
		8.921	NUT, SPRING M6X1 TYPE-C, U-SHAPE MULTI THD STYLE-1 PC (ENG COOL FAN BRKT) (PART OF 3)	93-02		8	11503957
8.	2-B8	1.055	CONNECTOR, MOT-ENG COOL FAN (OVAL) (2-WAY F) (W/LEADS) (2.535) (AC-DELCO #PT189)	93-02	F	1	12101917
9.		N.S.	CLIP, FWD LP WRG HARN				
10.	2-B21	1.277	VALVE, ENG COOL FAN SHRD AIR (VALVE 22135190 ELIMINATED FOR LT1 ENGINE AFTER 1993.)	93-94	F (LT1, C60)	2	22135190
		N.S.	FAN KIT, ENG ELEC COOL (VALVE 22135190 ELIMINATED FOR LT1 ENGINE AFTER 1993.)	95-02	F		

RPO DEFINITIONS

C60 – AIR CONDITIONER,FRONT,MANUAL CONTROLS
LS1 – ENGINE GAS, 8 CYL, 5.7L, SFI, ALUMINUM ENGINE
LT1 – ENGINE–GAS, 8 CYL, 5.7L(5.7P),MFI,HO
L36 – ENGINE GAS, 6 CYL, 3.8K, MFI, V6, HO (ERV6 SERIES)

cardiagn.com

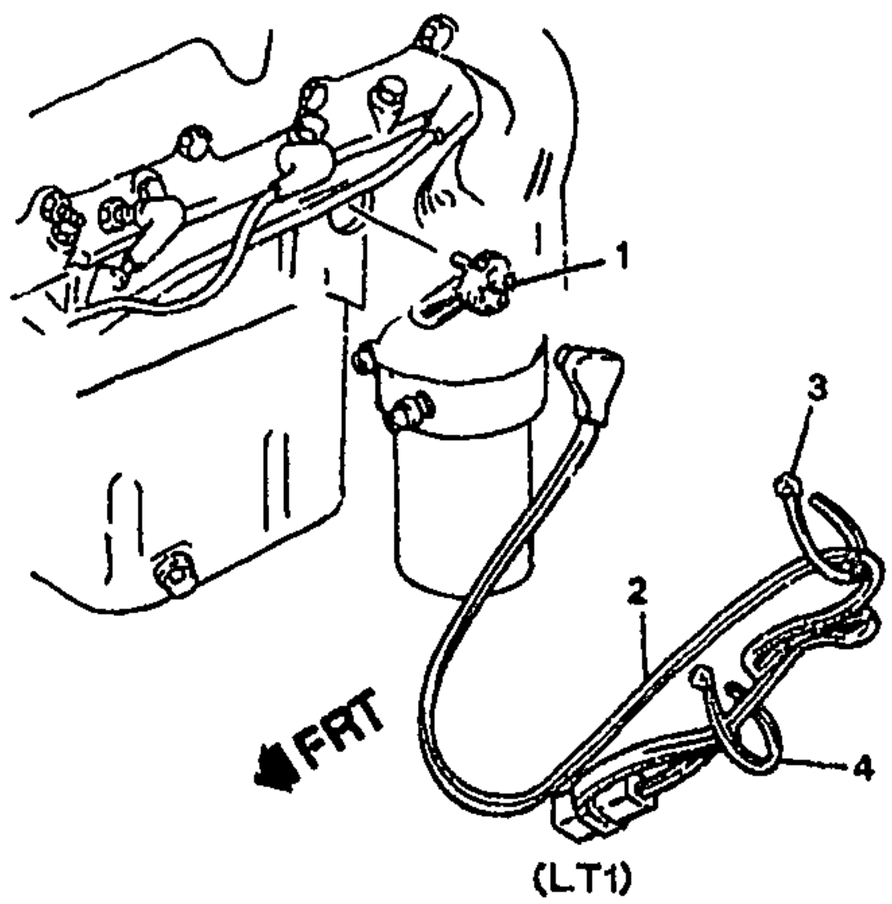

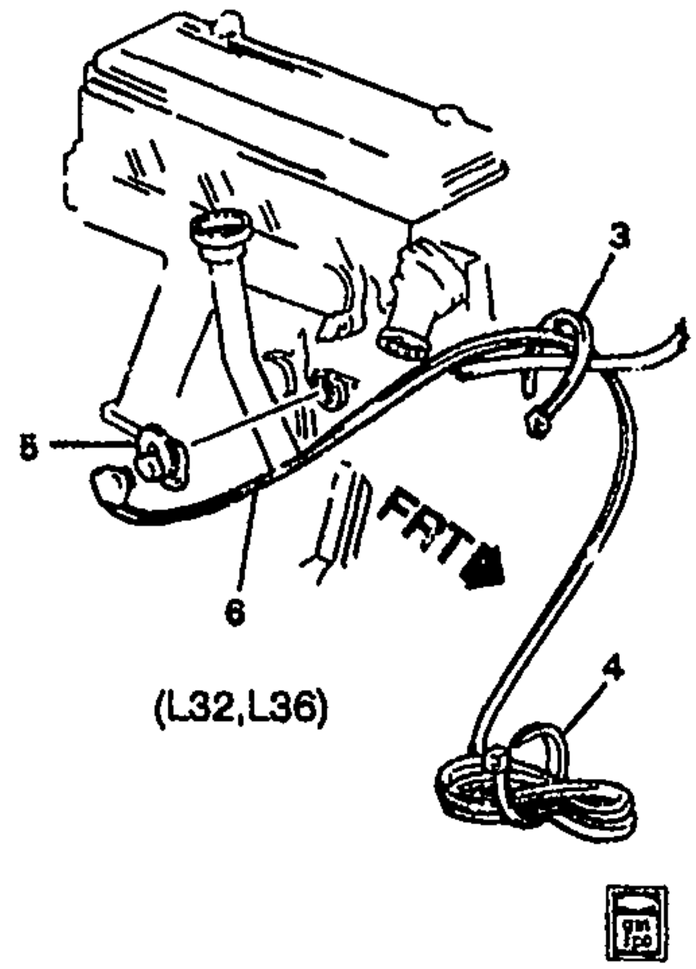

MF01-020

1993-2002 F ENGINE BLOCK HEATER (K05)

1.	2-L6	21.240 A	HEATER PKG, ENG BLK (INSTALL .75) (1.152)	93-97	F (LT1)	1	996246
	2-B15	1.152	HEATER, ENG COOL	98	F (LS1, K05)	1	12558510
	2-B15	1.152	HEATER, ENG COOL	99-02	F (LS1)	1	12560179
2.	2-B15	1.152	CORD, ENG COOL HTR	93-94	F (LT1, K05)	1	10195548
	2-B15	1.152	CORD, ENG COOL HTR	95-02	F (K05)	1	10402848
3.		8.965	STRAP-TIE-7"ADJ (W/ROSEBUD FOR .25 DIA HOLE .031-.14 TH) (ENG COOL HTR CORD)	93-02	F	1	3816659
4.		8.965	STRAP, ADJ TIE (ENG COOL HTR CORD) (AC-DELCO #12337820)	93-02	F	1	12337820
5.	2-B15	1.152	HEATER, ENG COOL	93-95	F (L32, K05)	1	10137649
	2-B15	1.152	HEATER, ENG COOL	95-02	F (L36, K05)	1	24503486
	2-B15	1.152	HEATER, ENG COOL	98	F (LS1, K05)	1	12558510
	2-B15	1.152	HEATER, ENG COOL	99-02	F (LS1)	1	12560179
6.	2-B15	1.152	CORD, ENG COOL HTR	93-94	F (L32, K05)	1	52353631
	2-B15	1.152	CORD, ENG COOL HTR	95-02	F (K05)	1	10402848

RPO DEFINITIONS

K05 – HEATER,ENGINE BLOCK
LS1 – ENGINE GAS, 8 CYL, 5.7L, SFI, ALUMINUM ENGINE
LT1 – ENGINE-GAS, 8 CYL, 5.7L (5.7P),MFI,HO
L32 – ENGINE 3.4L,V6,(3.4S),SFI,OHV
L36 – ENGINE GAS, 6 CYL, 3.8K, MFI, V6, HO (ERV6 SERIES)

cardiagn.com

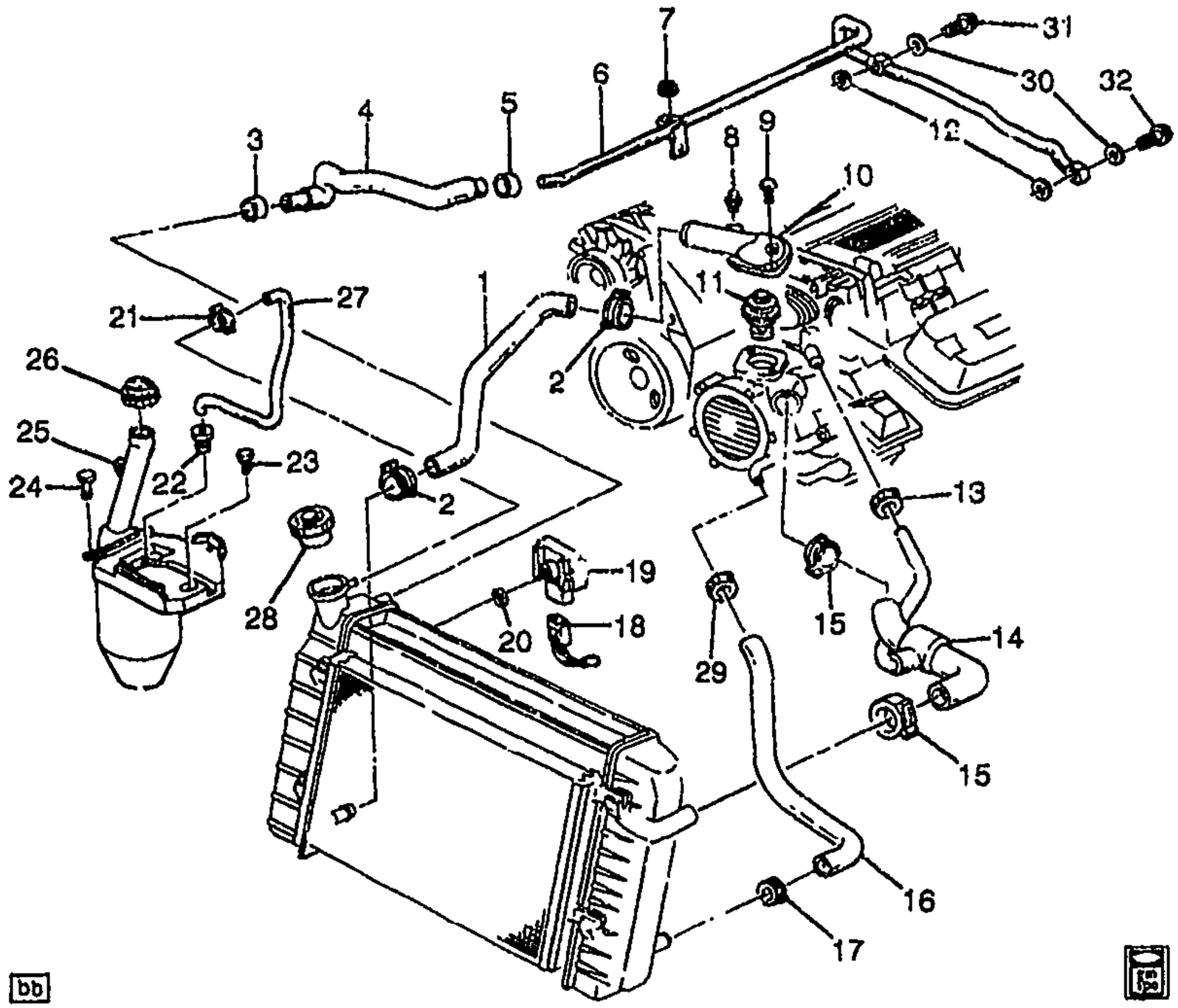

1993-1994 F HOSES & PIPES/RADIATOR (LT1/5.7P)

1.	2-B16	1.173	HOSE, RAD OTLT	93-94	F (LT1)	1	10256244
2.		8.948	CLAMP, 28.6-36.2 DIA WORM GEAR (RAD OTLT HOSE) (AC-DELCO #12338017)	93-94	F (LT1)	2	12338017
3.		8.948	CLAMP, WORM GEAR, 1/2-13/16 (RAD BYPASS HOSE)	93-94	.....	1	12527587
4.	2-B13	1.097	HOSE, ENG COOL AIR BL (PART OF 6)	93-94	F (LT1)	1	10188004
5.		N.S.	CLAMP, ENG COOL AIR BL PIPE (CRIMP FIT) (PART OF 6)		.....		
6.	2-B13	1.097	PIPE, ENG COOL AIR BL (INCLS 4, 5, 12, 30, 31, 32)	93-94	F (LT1)	1	10108635
7.		8.917	NUT, .375 16 HEX (ENG COOL AIR BL PIPE)	93-94	.....	1	14057004
8.	2-N26	8.846	VALVE, HTR AIR BL (PART OF 10) (1.035)	93-94	F (LT1)	1	10070107
9.		8.900	BOLT, HFH, M6X1X25, 10.9, FULL, PS (W/PUMP CVR)	93-94	.....	2	22539278
10.	2-B12	1.073	INLET, W/PMP (W/THERM HSG & BLEDR SCREW) (INCLS 8)	93-94	F (LT1)	1	10108667
11.	2-B19	1.246	THERMOSTAT, ENG COOL (180 DEG) (AC-DELCO #131-100) ..	93-94	F (LT1)	1	12555290
12.	2-B13	1.097	SEAL, ENG COOL AIR BL PIPE (O RING) (PART OF 6)	93-94	F (LT1)	4	10108680

cardiagn.com

13.		5.948	CLAMP, WORM GEAR, 1/2-13/16 (RAD INL HOSE)	93-94		1	22527587
14.	2-B16	1.159	HOSE, RAD INL (NON AUX)	93-94	F (LT1)	1	10256242
15.		8.948	CLAMP, 28.6-86.2 DIA WORM GEAR (RAD INL HOSE) (AC-DELCO #12338017)	93-94	F	2	12338017
16.	2-B16	1.159	HOSE, W/PMP OTLT (ENG BYPASS) (ENGINE BYPASS) (FROM BOTTOM OF WATER PUMP TO RADIATOR)	93-94	F (LT1)	1	10197675
17.		8.943	CLAMP, WORM GEAR, 11/16" TO 1 5/16" (RAD INL HOSE) (AC-DELCO #12337891)	93-94	F	1	12337891
18.	2-B16	1.203	CONNECTOR, SW-ENG COOL LVL IND (PART OF FWD LP WRG HARN) (3-WAY F, W/LEADS) (2.383) (AC-DELCO #PT782)	93-94	F	1	12167116
19.	2-B16	1.203	MODULE, ENG COOL LVL IND (INCLS 20)	93	F (LT1)	1	10185576
	2-B16	1.203	MODULE, ENG COOL LVL IND (INCLS 20) (W/2-WAY CONN, TO RAD) (INCLS SEN PROBE) (AC-DELCO #10096163)	94	F (LT1)	1	10096163
	2-B16	1.203	MODULE, ENG COOL LVL IND (INCLS 20) (W/8 WAY CONN, PLUGS INTO HARN)	94	F (LT1)	1	12135027
20.		N.S.	SEAL, ENG COOL LVL MOD (O-RING) (PART OF 19)				
21.		8.948	CLAMP, 1/4X5/8, .320 WIDE BAND, WORM GEAR HEX (COOL RCVY RSVR HOSE) (AC-DELCO #1648216)	93-94	F	1	1648216
22.	2-B19	1.240	GROMMET, COOL RCVY RSVR PIPE	93-94	F	1	10213669
23.		8.977	SCREW, HEX W/WA, M8X1.25X30, THD ROLL, PO (COOL RCVY RSVR)	93-94	F	1	11514478
24.		N.S.	RETAINER, COOL RCVY RSVR (USED ONLY W/ RESERVOIR 10188005)	93-94			
25.	2-B19	1.240	RESERVOIR, COOL RCVY (W/RIBS)	93-94	F	1	10402687
26.	2-B19	1.240	CAP, COOL RCVY RSVR (AC-DELCO #RC76)	93-94	F	1	10188034
27.	2-B19	1.240	HOSE, COOL RCVY RSVR	93-94	F	1	10188032
28.	2-B16	1.203	CAP, RAD FIL (AC-DELCO #RC24)	93-94	F	1	10402081
29.		8.948	CLAMP, SPR (25-29MM) (RAD INL HOSE)	93-94	F (LT1, GU2)	1	10108255
30.	2-B13	1.097	SEAL, ENG COOL AIR BL PIPE (O-RING) (PART OF 6)	93-94	F (LT1)	4	10108688
31.	2-B13	1.097	BOLT, ENG COOL AIR BL PIPE (PART OF 6) (.25-18 NPSF SPECIAL)	93-94	F (LT1)	1	12552974
32.	2-B13	1.097	BOLT, ENG COOL AIR BL PIPE (PART OF 6) (.25-18 NPSF SPECIAL)	93-94	F (LT1)	1	12552974

cardiagn.com

GU2 – AXLE,REAR,2.73 RATIO
LT1 – ENGINE–GAS, 8 CYL, 5.7L(5.7P),MFI,HO

cardiagn.com

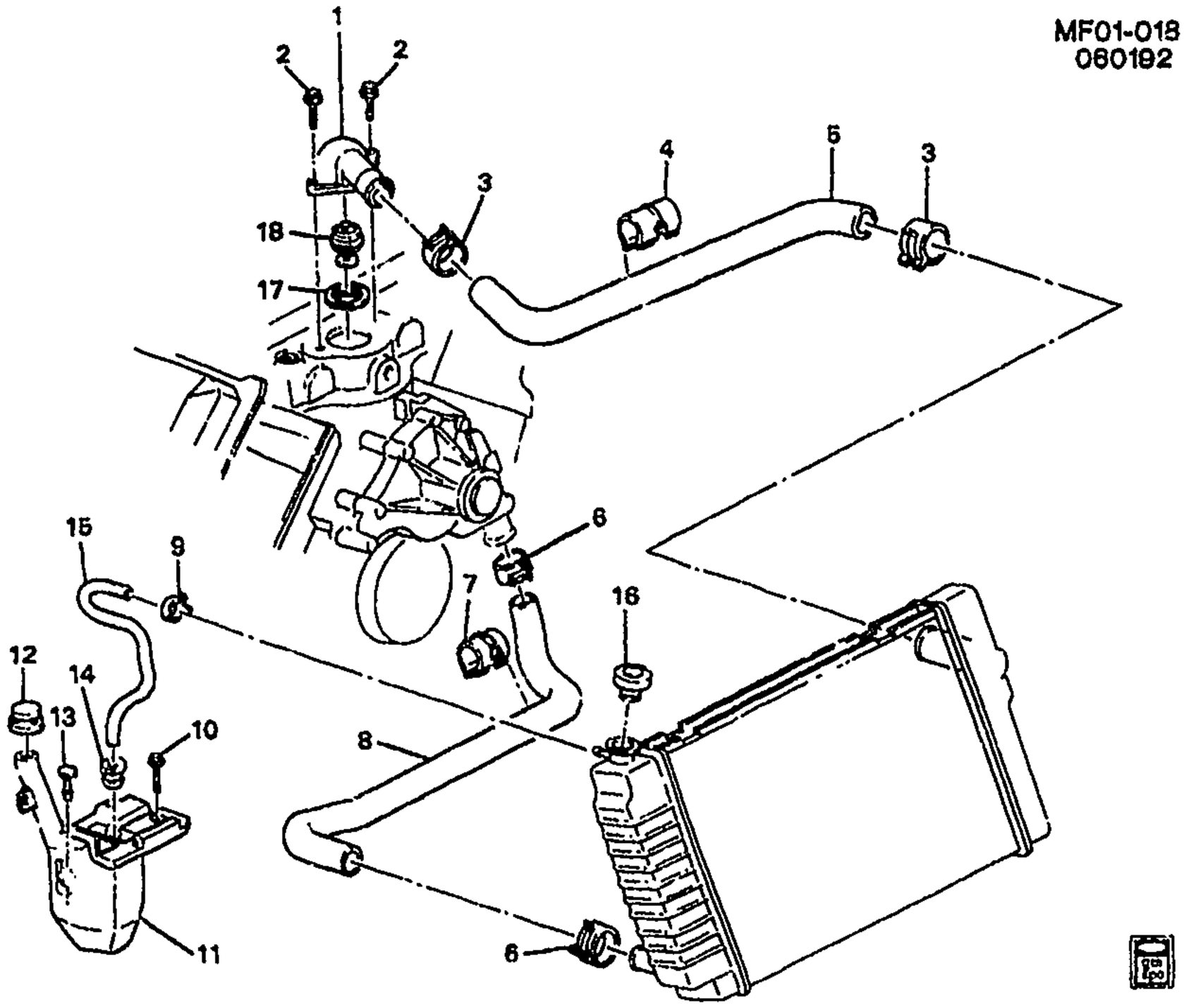

1993–1995 F HOSES & PIPES/RADIATOR (L32/3.4S)

1.	2–B15	1.153	OUTLET, WAT (AC–DELCO #15–1584)	93–95	F (L32)	1	10151656
2.		8.900	BOLT, M8X1.25X25 9.8 (WAT OTLT)	93–95	F	2	11508476
3.		8.948	CLAMP, 28.6–86.2 DIA WORM GEAR (RAD OTLT HOSE) (AC–DELCO #12338017)	93–95		2	12338017
4.	2–B16	1.166	GUARD, RAD OTLT HOSE	93–95	F (L32)	1	10236571
5.	2–B16	1.173	HOSE, RAD OTLT	93–95	F (L32)	1	10257067
6.		8.948	CLAMP, 28.3–86.2 DIA WORM GEAR (RAD INL HOSE) (AC–DELCO #12338017)	93–95		2	12338017
7.	2–B1[illegible]	1.166	GUARD, RAD OTLT HOSE	93–95	F (L32)	1	10236571
8.	2–B16	1.159	HOSE, RAD INL	93–95	F (L32)	1	10256243
9.		8.940	CLAMP, HEX HD WORM GEAR (.25" TO .63") (COOL RCVY RSVR HOSE)	93–95		1	2494772
10.		8.977	SCREW, HEX W/WA, M8X1.25X30, THD ROLL, PO (COOL RCVY RSVR)	93–95		1	11514478
11.	2–B19	1.240	RESERVOIR, COOL RCVY (W/RIBS)	93–95	F	1	10402687
12.	2–B19	1.240	CAP, COOL RCVY RSVR (AC–DELCO #RC78)	93–95	F	1	10188034

cardiagn.com

13.		N.S.	RETAINER, COOL RCVY RSVR (USED ONLY W/ RESERVOIR 10188005)	93–95			
14.	2–B19	1.240	GROMMET, COOL RCVY RSVR PIPE	93–95	F	1	10213669
15.	2–B19	1.240	HOSE, COOL RCVY RSVR	93–95	F	1	10188032
16.	2–B16	1.203	CAP, RAD FIL (AC–DELCO #RC24)	93–95	F	1	10402081
17.	2–B20	1.252	SEAL, ENG COOL THERM (O RING) (PART OF 18) (WITH LIP) (46.80MM O.D.) (AC–DELCO #10226107)	93–95	F (L32)	1	10226107
18.	2–B19	1.245	THERMOSTAT, ENG COOL (INCLS 17) (INCLS SEAL) (AC–DELCO #131–122)	93–95	F (L32)	1	24577299

RPO DEFINITIONS
L32 – ENGINE,3.4L,V6,(3.4S),SFI,OHV

cardiagn.com

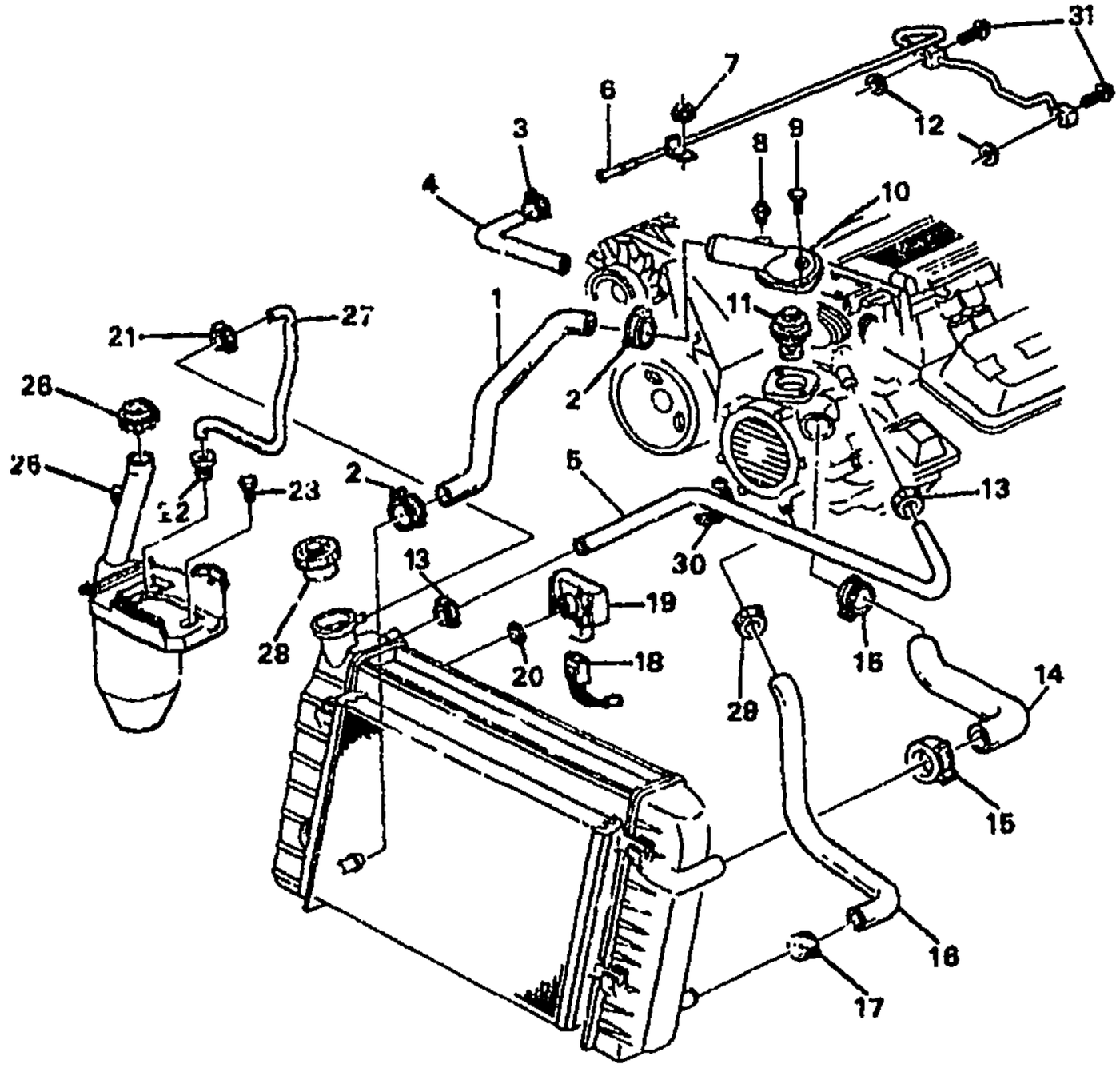

MF01-030

1995-1997 F HOSES & PIPES/RADIATOR (LT1/5.7P)

1.	2-B16	1.173	HOSE, RAD OTLT	95-97	F (LT1)	1	10256244
2.		8.948	CLAMP 28.6-86.2 DIA WORM GEAR (RAD OTLT HOSE) (AC-DELCO #12338017)	95-97	F (LT1)	2	12338017
3.		8.948	CLAMP WORM GEAR, 1/2-13/16 (RAD BYPASS HOSE)	95-97	F	1	22527587
4.	2-M22	3.337	HOSE, THROT BODY HTR INL ...	95-97	F (LT1)	1	12553625
5.	2-M22	3.337	HOSE, THROT BODY HTR OTLT .	95-97	F (LT1)	1	10261149
6.	2-B13	1.097	PIPE, ENG COOL AIR BL (INCLS 12) (INCLUDES BOLTS & SEALS)	95-97	F (LT1)	1	12556260
7.		8.917	NUT, .375 16 HEX (ENG COOL AIR BL PIPE)	95-97	F	1	14057004
8.	2-N26	8.846	VALVE, HTR AIR BL (PART OF 10) (1.035)	95-97	F (LT1)	1	10070107
9.		8.900	BOLT, HFH, M6X1X25, 10.9, FULL, PS (W/PUMP CVR)	95-97	F	2	22539278
10.	2-B12	1.073	INLET, W/PMP (W/THERM HSG & BLEDR SCREW) (INCLS 8)	95-97	F (LT1)	1	10108667
11.	2-B19	1.246	THERMOSTAT, ENG COOL (180 DEG) (AC-DELCO #131-100) ..	95-97	F (LT1)	1	12555290
12.	2-B13	1.097	SEAL, ENG COOL AIR BL PIPE (O RING) (PART OF 6)	95-97	F (LT1)	4	10108689

cardiagn.com

13.		8.948	**CLAMP**, WORM GEAR, 1/2–13/16 (RAD INL HOSE)	95–97	F	1	22527587
14.	2–B16	1.159	**HOSE**, RAD INL	95–97	F (LT1)	1	10261148
15.		8.948	**CLAMP**, 28.6–86.2 DIA WORM GEAR (RAD INL HOSE) (AC–DELCO #12338017)	95–97	F	2	12338017
16.	2–B16	1.159	**HOSE**, W/PMP OTLT (ENGINE BYPASS) (FROM BOTTOM OF WATER PUMP TO RADIATOR) ...	95	F (LT1) (EXC KC4)	1	10197675
	2–B16	1.159	**HOSE**, W/PMP OTLT (ENGINE BYPASS) (FROM BOTTOM OF WATER PUMP TO RADIATOR) ...	96	F (LT1, GU2)	1	10197675
	2–B16	1.159	**HOSE**, W/PMP OTLT (ENGINE BYPASS) (FROM BOTTOM OF WATER PUMP TO RADIATOR) ...	97	F (LT1)	1	10197675
17.		8.948	**CLAMP**, WORM GEAR, 11/16" TO 1 5/16" (RAD INL HOSE) (AC–DELCO #12337891)	95–97	F	1	12337891
18.	2–B16	1.203	**CONNECTOR**, SW–ENG COOL LVL IND (PART OF FWD LP WRG HARN) (3–WAY F, W/LEADS) (2.383) (AC–DELCO #PT782) ...	95–97	F	1	12167116
19.	2–B16	1.203	**MODULE**, ENG COOL LVL IND (INCLS 20) (W/2–WAY CONN, TO RAD) (INCLS SEN PROBE) (AC–DELCO #10096163)	95–97	F (LT1)	1	10096163
	2–B16	1.203	**MODULE**, ENG COOL LVL IND (INCLS 20) (W/8 WAY CONN, PLUGS INTO HARN)	95	F (LT1)	1	12135027
20.		N.S.	**SEAL**, ENG COOL LVL MOD (O–RING) (PART OF 19)		.....		
21.		8.948	**CLAMP**, 1/4X5/8, .320 WIDE BAND, WORM GEAR HEX (COOL RCVY RSVR HOSE) (AC–DELCO #1648216)	95–97	F	1	1648216
22.	2–B19	1.240	**GROMMET**, COOL RCVY RSVR PIPE	95–97	F	1	10213669
23.		8.977	**SCREW**, HEX W/W/A, M8X1.25X30, THD ROLL, PO (COOL RCVY RSVR)	95–97	F	1	11514478
25.	2–B19	1.240	**RESERVOIR**, COOL RCVY (W/RIBS)	95–97	F	1	10402687
26.	2–B19	1.240	**CAP**, COOL RCVY RSVR (AC–DELCO #RC78)	95–97	F	1	10188034
27.	2–B19	1.240	**HOSE**, COOL RCVY RSVR	95–97	F	1	10188032
28.	2–B16	1.203	**CAP**, RAD FIL (AC–DELCO #RC24)	95–97	F	1	10402081
29.		8.948	**CLAMP**, HOSE SPRING *BLACK, 42MM – NOMINAL SIZE (RAD INL HOSE)	95–97	.....	AR	15024902
30.		8.965	**STRAP**, ADJ TIE (HTR OTLT HOSE) (AC–DELCO #12337820)	95–97	F (LT1)	1	12337820
31.	2–B13	1.097	**BOLT**, ENG COOL AIR BL PIPE (.25–18 NPSF SPECIAL)	95–97	F (LT1)	1	12552974

RPO DEFINITIONS
GU2 – AXLE,REAR,2.73 RATIO
KC4 – COOLING SYSTEM,ENGINE OIL

cardiagn.com

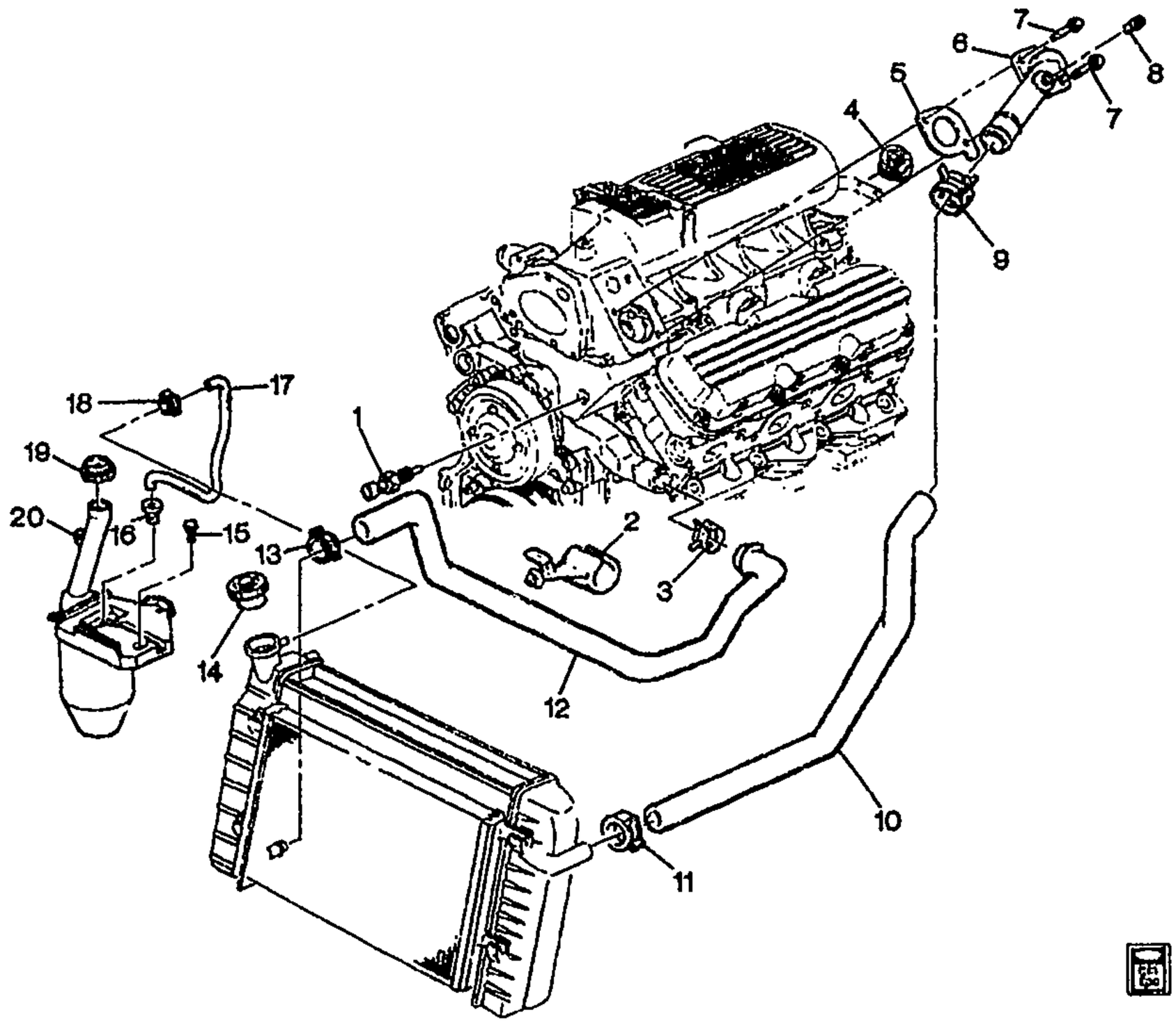

MF01-031

1995-2002 F HOSES & PIPES/RADIATOR (L36/3.8)

1.	2-B14	1.150	SENSOR, ENG COOL TEMP (W/ENG COOL T/GA SEN) (3 BLADE TERM) (W/IND SW) (3.682) (AC-DELCO #213-815)	95-99	F (L36)	1	10096181
	2-N8	3.682	SENSOR, ENG COOL TEMP (AC-DELCO #213-928)	01-02	F (L36, M30, M49)	1	15326386
	2-B14	1.150	SENSOR, ENG COOL TEMP (3.682) (AC-DELCO #213-928)	01-02	F (L36, M30, M49)	1	15326386
	2-B14	1.150	SENSOR, ENG COOL TEMP (AT INT MANIF. INTERFACES W/ECM, USED FOR CLUSTERS W/OIL GAGE & LIGHT COMB, GOES W/12101899 CONN) (2-WAY M) (3.682) (AC-DELCO #213-310)	00	F (L36)	1	12146312
2.	2-B16	1.166	GUARD, RAD OTLT HOSE	95-02	F (L36)	1	10272639
3.		8.948	CLAMP, HOSE (RAD OTLT HOSE) (1.166)	95-02	F	1	15024903
4.	2-B19	1.246	THERMOSTAT, ENG COOL (W/GSKT) (195 DEG) (AC-DELCO #131-115)	95-97	F (L36)	1	24506986

cardiagn.com

	2-B19	1.246	THERMOSTAT, ENG COOL (W/GSKT) (AC-DELCO #131-120)	98-02	F (L36)	1	24505924
5.	2-B15	1.154	GASKET, WAT OTLT (NOT USED IN 1999)	95-98	F (L36)	1	24502433
6.	2-B15	1.153	OUTLET, WAT (W/O VALVE) (AC-DELCO #15-1704)	95-02	F (L36)	1	24503978
7.	2-B15	1.153	BOLT, WAT OTLT (M8X1.25X66.4, 27 THD) (3.275)	95-02	F	2	24501552
8.	2-B8	1.035	VALVE, ENG COOL AIR BL	95-99	F (L36)	1	25535220
	2-B8	1.035	VALVE, ENG COOL AIR BL	00-02	F (L36)	1	10070107
9.		8.948	CLAMP, HOSE SPRING *BLACK, 42MM - NOMINAL SIZE (RAD INL HOSE)	95-02		AR	15024902
10.	2-B16	1.159	HOSE, RAD INL (MTS)	95-02	F (L36)	1	10239870
11.		8.948	CLAMP, HOSE SPRING *BLACK, 42MM - NOMINAL SIZE (RAD INL HOSE)	95-02		AR	15024902
12.	2-B16	1.173	HOSE, RAD OTLT (W/O GUARD)	95-02	F (L36)	1	10280801
13.		8.948	CLAMP, HOSE SPRING *BLACK, 42MM - NOMINAL SIZE (OTLT)	95-02		AR	15024902
14.	2-B16	1.203	CAP, RAD FIL (AC-DELCO #RC24)	95-02	F	1	10402081
15.		8.977	SCREW, HEX W/WA, M8X1.25X30, THD ROLL, PO (COOL RCVY RSVR)	95-02	F	1	11514478
16.	2-B19	1.240	GROMMET, COOL RCVY RSVR PIPE	95-02	F	1	10213669
17.	2-B19	1.240	HOSE, COOL RCVY RSVR	95-02	F	1	10188032
18.		8.948	CLAMP, 1/4X5/8, .320 WIDE BAND, WORM GEAR HEX (COOL RCVY RSVR HOSE) (AC-DELCO #1648216)	95-02	F	1	1648216
19.	2-B19	1.240	CAP, COOL RCVY RSVR (AC-DELCO #RC78)	95-02	F	1	10188034
20.	2-B19	1.240	RESERVOIR, COOL RCVY (W/RIBS)	95-02	F	1	10402687

RPO DEFINITIONS

L36 - ENGINE GAS, 6 CYL, 3.8K, MFI, V6, HO (ERV6 SERIES)
M30 - TRANSMISSION,AUTOMATIC 4 SPEED,4L60E,ELECTRONIC
M49 - TRANSMISSION MAN 5 SPD, BORG WARNER, 77MM, 3.75 1ST, .76 5TH, O/D

cardiagn.com

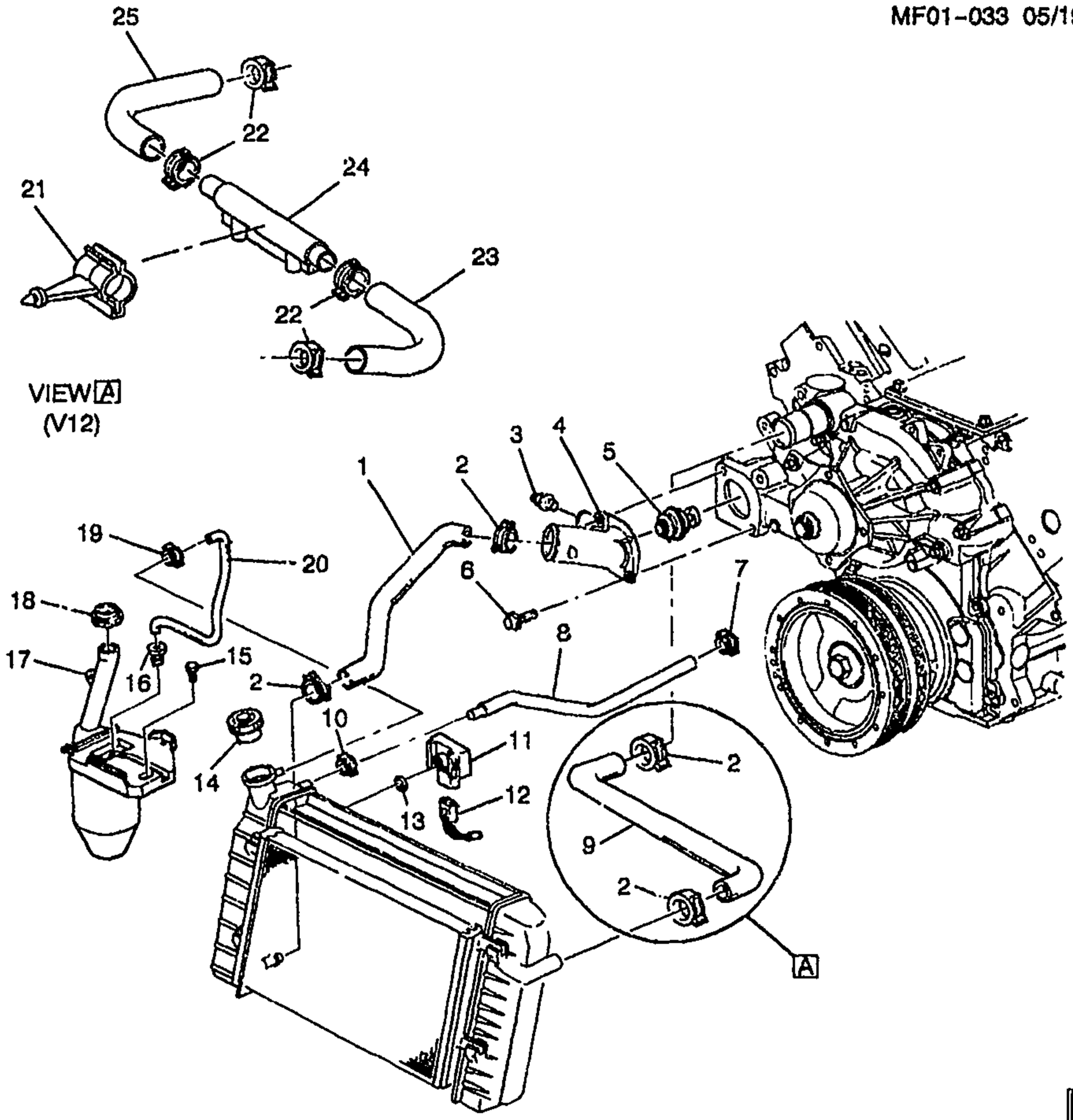

MF01-033

1998-1999 F HOSES & PIPES/RADIATOR (LS1/5.7G)

1.	2-B16	1.173	HOSE, RAD OTLT	98-99	F (LS1)	1	10271555
2.		8.948	CLAMP HOSE SPRING *BLACK, 42MM - NOMINAL SIZE (RAD INL HOSE)	98-99	.....	AR	15024902
3.		N.S.	VALVE, ENG COOL AIR BL (PART OF 4)		.....		
4.	2-B12	1.073	INLET, W/PMP (INCLS 3, 5, 6) (INCLS INLET, THERMOSTAT, SEAL, VALVE, RET)	98-99	F (LS1)	1	12562740
5.		N.S.	THERMOSTAT, ENG COOL (PART OF 4)		.....		
6.		N.S.	BOLT, W/PMP INL (PART OF 4) ..		.....		

cardiagn.com

7.	2-M22	3.337	**CLAMP**, THROT BODY HTR OTLT HOSE (1.5MM THICK) (SPRINGBAND 15MM) (1.240) ...	98-99	F (LS1)	1	11516217
8.	2-M22	3.337	**HOSE**, THROT BODY HTR OTLT .	98-99	F (LS1)	1	12556452
9.	2-B16	1.159	**HOSE**, RAD INL	98-99	F (LS1) (EXC V12)	1	10271554
10.		8.948	**CLAMP**, WORM GEAR, 1/2-13/16 (THROT BODY HTR OTLT HOSE)	98-99	.....	1	22527587
11.	2-B16	1.203	**MODULE**, ENG COOL LVL IND (INCLS 13) (W/2-WAY CONN, TO RAD) (INCLS SEN PROBE) (AC-DELCO #10096163)	98-99	F (LS1)	1	10096163
12.	2-B16	1.203	**CONNECTOR**, SW-ENG COOL LVL IND ((PART OF FWD LP WRG HARN)) (3-WAY F, W/LEADS) (2.383) (AC-DELCO #PT782) ...	98-99	F	1	12167116
13.		N.S.	**SEAL**, ENG COOL LVL MOD (O-RING) (PART OF 11)		.....		
14.	2-B16	1.203	**CAP**, RAD FIL (AC-DELCO #RC24)	98-99	F	1	10402081
15.		8.977	**SCREW**, HEX W/WA, M8X1.25X30, THD ROLL, PO (COOL RCVY RSVR)	98-99	F	1	11514478
16.	2-B19	1.240	**GROMMET**, COOL RCVY RSVR PIPE	98-99	F	1	10213669
17.	2-B19	1.240	**RESERVOIR**, COOL RCVY (W/RIBS)	98-99	F	1	10402687
18.	2-B19	1.240	**CAP**, COOL RCVY RSVR (AC-DELCO #RC78)	98-99	F	1	10188034
19.		8.948	**CLAMP**, 1/4X5/8, .320 WIDE BAND, WORM GEAR HEX (COOL RCVY RSVR HOSE) (AC-DELCO #1648216)	98-99	F	1	1648216
20.	2-B19	1.240	**HOSE**, COOL RCVY RSVR	98-99	F	1	10188032
21.	2-N21	6.602	**CLIP**, P/S FLUID CLG PIPE	98-99	F (LS1, V12)	1	10414272
22.		8.948	**CLAMP**, HOSE SPRING *BLACK, 42MM - NOMINAL SIZE (RAD INL HOSE)	98-99	.....	AR	15024902
23.	2-B16	1.159	**HOSE**, RAD INL FRT (MXD)	98-99	F (LS1, V12)	1	10413567
24.	2-N21	6.600	**COOLER**, P/S FLUID	98-99	F (LS1, V12) (EXPORT)	1	10417037
25.	2-B16	1.159	**HOSE**, RAD INL	98-99	F (LS1, V12)	1	10403194

RPO DEFINITIONS
LS1 - ENGINE GAS, 8 CYL, 5.7L, SFI, ALUMINUM ENGINE
V12 - COOLING SYSTEM,POWER STEERING FLUID

cardiagn.com

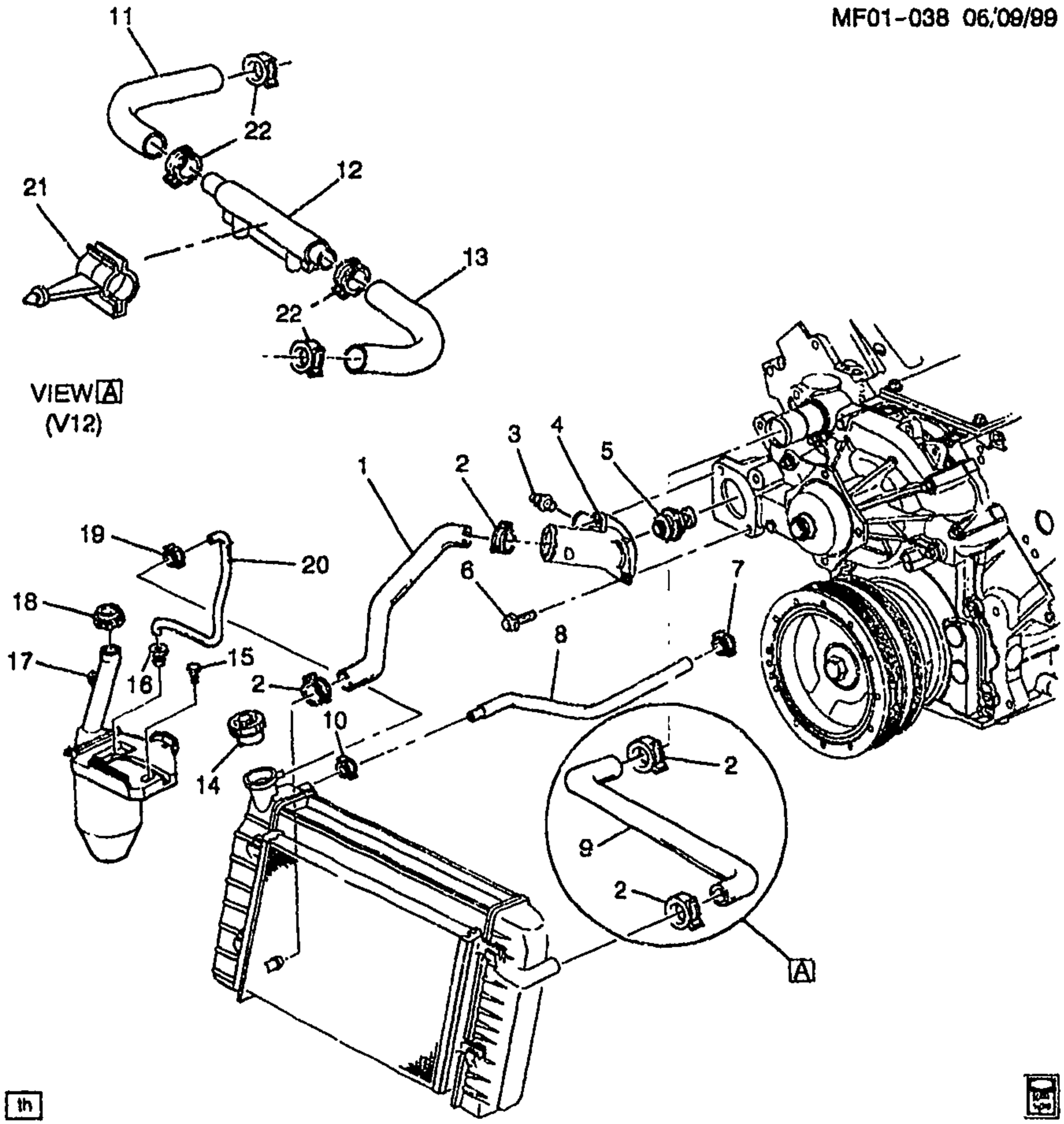

MF01-038

2000-2002 F HOSES & PIPES/RADIATOR (LS1/5.7G)

1.	2-B16	1.173	HOSE, RAD OTLT	00-02	F (LS1)	1	10271555
2.		8.948	CLAMP, HOSE SPRING *BLACK, 42MM – NOMINAL SIZE (RAD INL HOSE)	00-02	.....	AR	15024902
3.		N.S.	VALVE, ENG COOL AIR BL (PART OF 4)		.....		
4.	2-B12	1.073	INLET, W/PMP (INCLS 3, 5, 6) (INCLS INLET, THERMOSTAT, SEAL, VALVE, RET)	00-02	F (LS1)	1	12562740
5.		N.S.	THERMOSTAT, ENG COOL (PART OF 4)		.....		
6.		N.S.	BOLT, W/PMP INL (POA PUMP ASM) (PART OF 4)		.....		

cardiagn.com

7.	2–M22	3.337	**CLAMP**, THROT BODY HTR OTLT HOSE (1.5MM THICK) (SPRINGBAND 15MM) (1.240) ...	00–02	F (LS1)	1	11516217
8.	2–M22	3.337	**HOSE**, THROT BODY HTR CTLT .	00–02	F (LS1)	1	12556452
9.	2–B16	1.159	**HOSE**, RAD INL	00–01	F (LS1) (EXC V12)	1	10271554
	2–B16	1.159	**HOSE**, RAD INL	02	F (LS1)	1	10403194
10.		8.948	**CLAMP**, WORM GEAR, 1/2–13/16 (THROT BODY HTR OTLT HOSE)	00–02	.....	1	22527587
11.	2–B16	1.159	**HOSE**, RAD INL	00–01	F (LS1, V12)	1	10403194
	2–B16	1.159	**HOSE**, RAD INL	02	F (LS1)	1	10403194
12.	2–N21	6.600	**COOLER**, P/S FLUID	00–02	F (LS1, V12) (EXPORT)	1	10417037
13.	2–B16	1.159	**HOSE**, RAD INL FRT (MXD)	00–02	F (LS1, V12)	1	10413567
14.	2–B16	1.203	**CAP**, RAD FIL (AC–DELCO #RC24)	00–02	F	1	10402081
15.		8.977	**SCREW**, HEX W/WA, M8X1.25X30, THD ROLL, PO (COOL RCVY RSVR)	00–02	F	1	11514478
16.	2–B19	1.240	**GROMMET**, COOL RCVY RSVR PIPE	00–02	F	1	10213669
17.	2–B19	1.240	**RESERVOIR**, COOL RCVY (W/RIBS)	00–02	F	1	10402687
18.	2–B19	1.240	**CAP**, COOL RCVY RSVR (AC–DELCO #RC78)	00–02	F	1	10188034
19.		8.948	**CLAMP**, 1/4X5/8, .320 WIDE BAND, WORM GEAR HEX (COOL RCVY RSVR HOSE) (AC–DELCO #1648216)	00–02	F	1	1648216
20.	2–B19	1.240	**HOSE**, COOL RCVY RSVR	00–02	F	1	10188032
21.	2–N21	6.602	**CLIP**, P/S FLUID CLG PIPE	00–02	F (LS1, V12)	1	10414272
22.		8.948	**CLAMP**, HOSE SPRING *BLACK, 42MM – NOMINAL SIZE (RAD INL HOSE)	00–02	.....	AR	15024902

RPO DEFINITIONS
LS1 – ENGINE GAS, 8 CYL, 5.7L, SFI, ALUMINUM ENGINE
V12 – COOLING SYSTEM,POWER STEERING FLUID

cardiagn.com

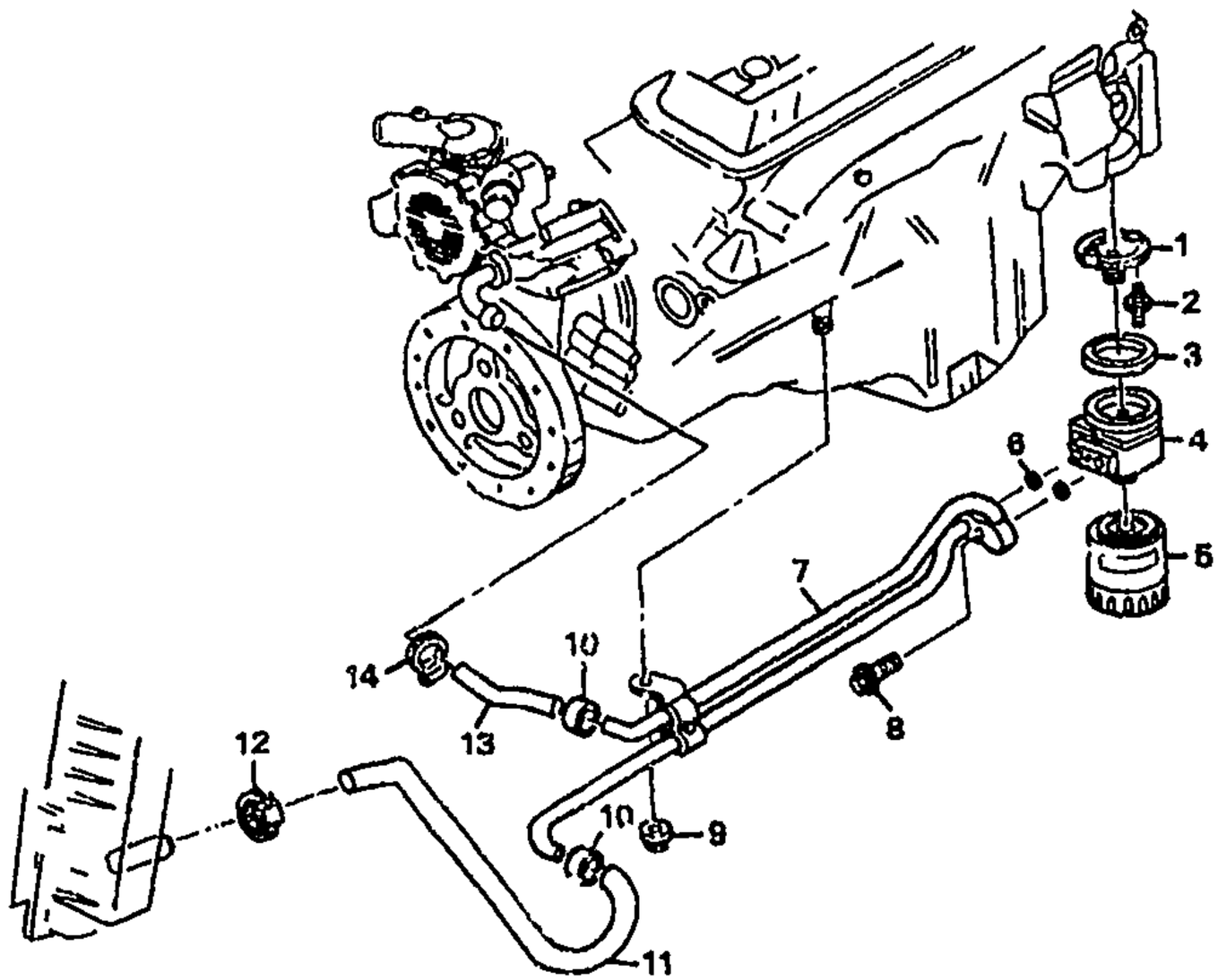

1993-1994 F ENGINE OIL COOLER LINES (KC4)

1.	2-C5	1.840	ADAPTER, OIL FLTR	93-94	F (LT1, KC4)	1	10055722
2.	2-C5	1.840	STUD, OIL FLTR ADAP (5/16-18X1.88)	93-94	F (LT1, KC4)	2	14101106
		9.800	BOLT, HEX WA HD (.312-18X1.125 PL) (OIL FLTR ADAP)	93-94	F	2	3951644
3.	2-B26	1.550	SEAL, ENG OIL CLR	93-94	F (LT1)	1	14087586
4.	2-B26	1.540	COOLER, ENG OIL	93-94	F (LT1, KC4)	1	10168415
5.	2-C4	1.836	FILTER, OIL (AC-DELCO #PF25)	93-94	F	1	6438261
6.	2-B26	1.540	WASHER, ENG OIL CLR (PART OF 7)	93-94	F	2	10170112
7.	2-B26	1.540	HOSE, ENG OIL CLR (INCLS 6, 10, 11, 13)	93-94	F (KC4)	1	10241617
8.		8.900	BOLT, HFH M10X1.5X30 10.9 FL BLK 21.5 OD 26MM THD POINTED (ENG OIL CLR)	93-94		1	12337993
9.		8.917	NUT, HFH 5/16-18X.20 286M PC .67-OD (ENG OIL CLR PIPE BRKT)	93-94		1	1359887
10.		N.S.	COUPLING, ENG OIL CLR HOSE (PART OF 7)	93-94			
11.		8.962	HOSE (ENG OIL CLR OTLT) (PART OF 7)	93-94		AR	12368235
12.		8.948	CLAMP, WORM GEAR, 11/16" TO 1 5/16" (ENG OIL CLR OTLT HOSE) (AC-DELCO #12337891)	93-94		1	12337891

cardiagn.com

13.	N.S.	HOSE, ENG OIL CLR INL (PART OF 7)	93-94	.....		
14.	8.948	CLAMP, WORM GEAR, 11/16" TO 1 5/16" (ENG OIL CLR INL HOSE) (AC-DELCO #12337891)	93-94	F	1	12337891

RPO DEFINITIONS
KC4 – COOLING SYSTEM,ENGINE OIL
LT1 – ENGINE–GAS, 8 CYL, 5.7L(5.7P),MFI,HO

cardiagn.com

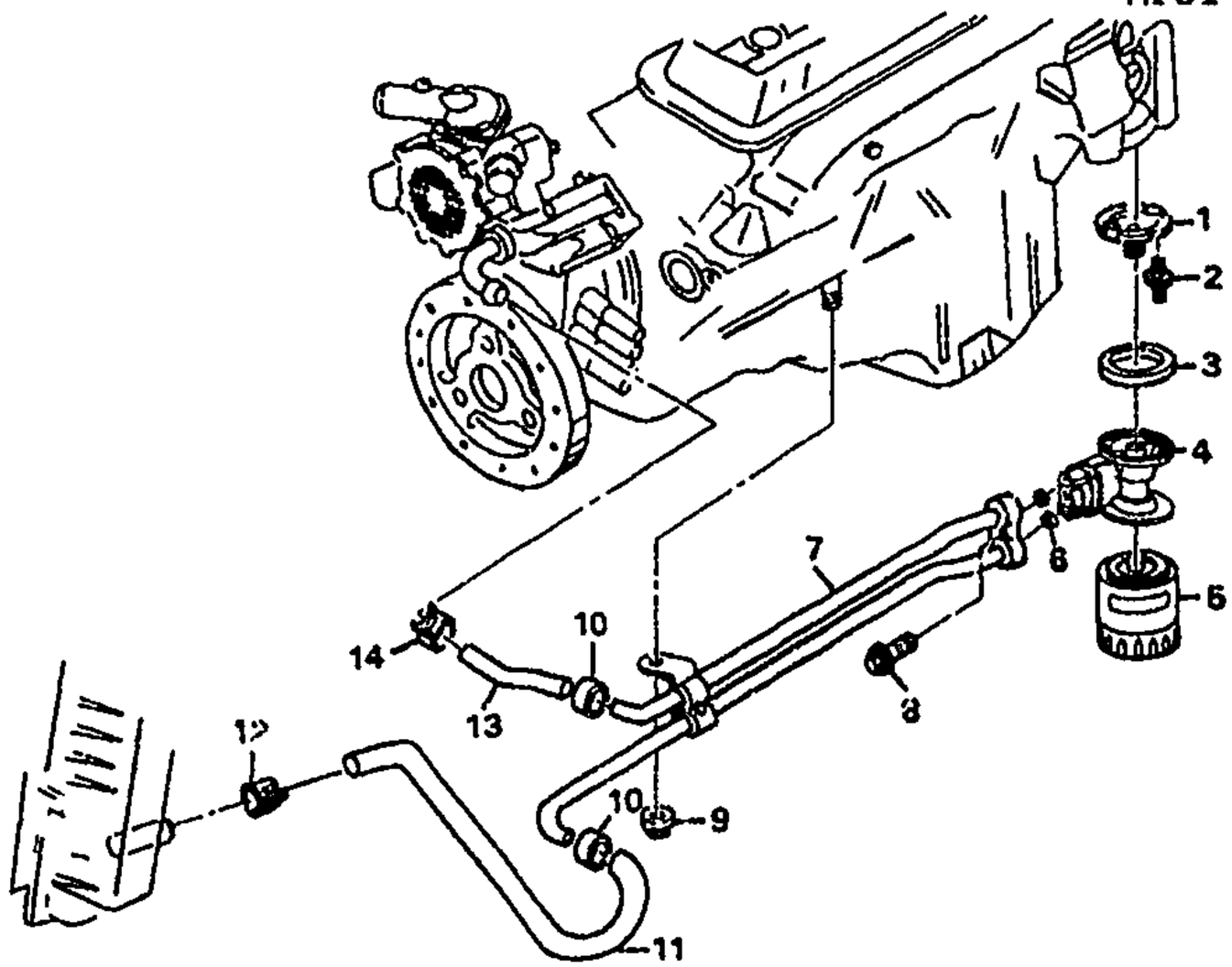

MF01-022

1995 F ENGINE OIL COOLER LINES (KC4,LT1)

1.	2-C5	1.840	**ADAPTER**, OIL FLTR	95 F (LT1, KC4)	1	10055722
2.	2-C5	1.840	**STUD**, OIL FLTR ADAP (5/16-18X1.88)	95 F (LT1, KC4)	2	14101106
		8.900	**BOLT**, HEX WA HD (.312-18X1.125 PL) (OIL FLTR ADAP)	95 F	2	3951644
3.	2-B26	1.550	**SEAL**, ENG OIL CLR (PART OF 4) (AC-DELCO #12369014)	95 F (LT1, KC4)	1	12369014
4.	2-B26	1.540	**COOLER**, ENG OIL (INCI S 3) (INCLS SEAL ON TOP AGAINST OIL ADAPTER) (AC-DELCO #10244123)	95 F (LT1, KC4)	1	10244123
5.	2-C4	1.836	**FILTER**, OIL (AC-DELCO #PF25)	95 F (LT1)	1	6438261
	2-C4	1.836	**FILTER**, OIL (AC-DELCO #UPF25)	95 F (LT1)	1	25322833
	2-C4	1.836	**FILTER**, OIL (AC-DELCO #SPF25)	95 F (LT1)	1	25325405
6.	2-B26	1.550	**SEAL**, ENG OIL CLR PIPE (O RING) (PART OF 7) (1.456)	95 F (LT1, KC4)	2	14090908
7.	2-B26	1.540	**HOSE**, ENG OIL CLR (INCLS 6, 10, 11, 13)	95 F (LT1, KC4)	1	10243315
8.		8.900	**BOLT**, HFH M10X1.5X30 10.9 FL BLK 21.5 OD 26MM THD POINTED (ENG OIL CLR)	95 F	1	12337993
9.		8.917	**NUT**, HFH 5/16-18X.20 286M PC .67-OD (ENG OIL CLR PIPE BRKT)	95 F	1	1359887
10.		N.S.	**COUPLING**, ENG OIL CLR HOSE (PART OF 7)	.....		
11.		N.S.	**HOSE**, ENG OIL CLR OTLT (ENG OIL CLR OTLT) (PART OF 7)	.....		

cardiagn.com

						MF01-022
12.	8.948	**CLAMP**, WORM GEAR, 11/16" TO 1 5/16" (ENG OIL CLR OTLT HOSE) (AC-DELCO #12337891)	95	F	1	12337891
13.	N.S.	**HOSE**, ENG OIL CLR INL (PART OF 7)		.....		
14.	8.948	**CLAMP**, SPR (25-29MM) (ENG OIL CLR INL HOSE)	95	F	1	10108255

RPO DEFINITIONS
KC4 – COOLING SYSTEM,ENGINE OIL
LT1 – ENGINE-GAS, 8 CYL, 5.7L(5.7P),MFI,HO

cardiagn.com

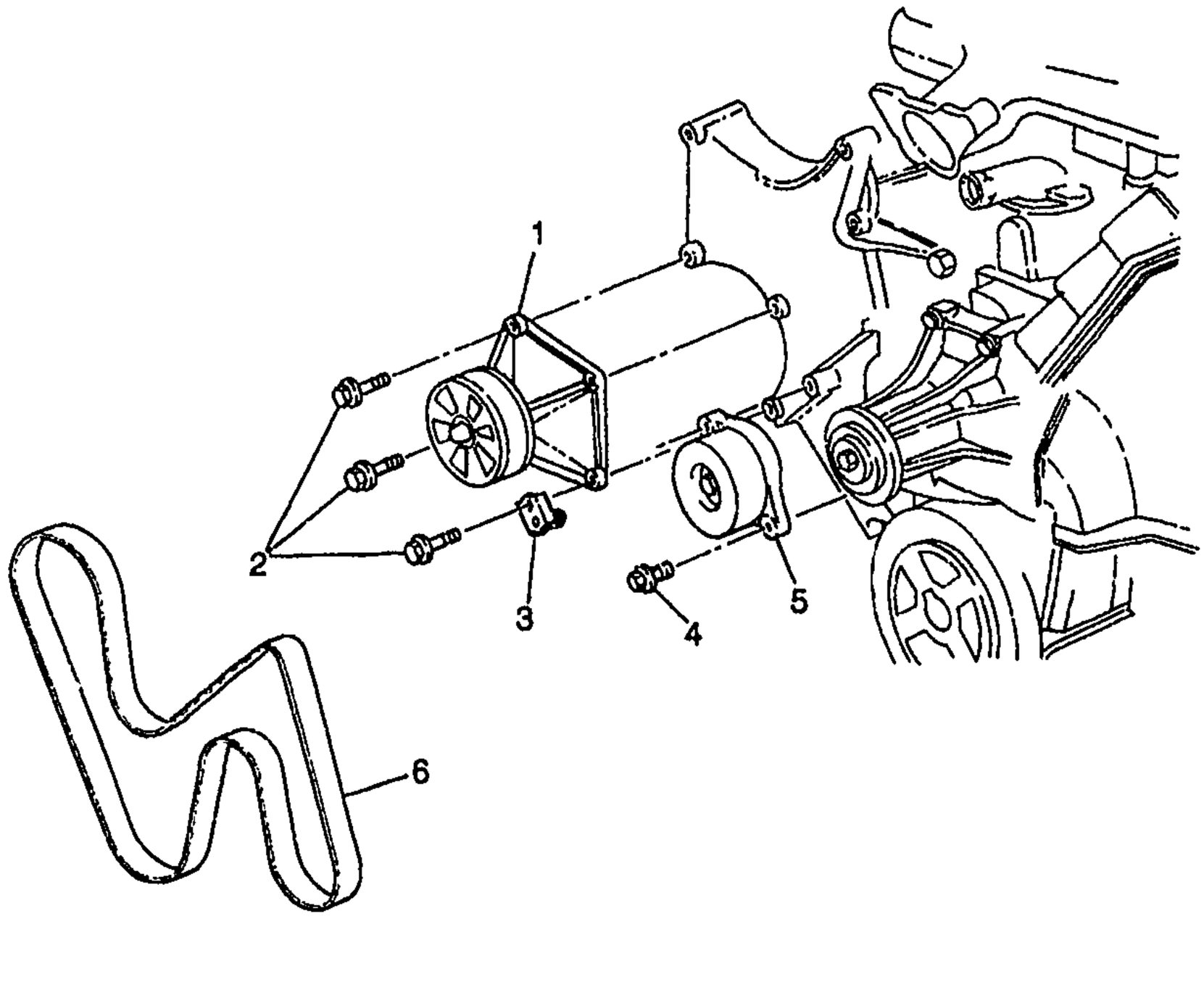

MF01-023

1993-1995 F TENSIONER/DRIVE BELT & IDLER PULLEYS(L32)

1.	2-B11	1.062	PULLEY, BELT IDLER	93-95	F (L32, C41)	1	10115875
2.		8.900	BOLT, HFH, M10X1.5X45, 25THD, 22.3OD, 10.9, 7114M, MACH RAISED SHOULDER (A/C CMPR BRKT)	93-95	F	3	11515769
3.	2-L13	2.343	BRACKET, BAT CBL CLIP (9.242)	93-95	F (C41)	1	10188089
4.		8.900	BOLT, HWH, M8X1.25X40, SPL FULLTHD, AC PT, 10.9 PZOR (DRV BELT TENSR)	93-95	F	2	11515758
5.	2-B10	1.060	TENSIONER, DRV BELT	93-95	F (L32)	1	12552509
6.	2-B11	1.066	BELT, W/PMP & GEN & P/S PUMP (6 PK POLY V 20.50 TOP WIDTH 1954MM LG)	93-95	F (L32, C41)	1	10115869
	2-B11	1.066	BELT, W/PMP & A/C CMPR & GEN & P/S PUMP (PART IS OPT W/10228795)	93-95	F (L32, C60)	1	10243486

RPO DEFINITIONS
C41 – HEATER,OUTSIDE AIR,WITH FAN AND DEFROSTER
C60 – AIR CONDITIONER,FRONT,MANUAL CONTROLS
L32 – ENGINE,3.4L,V6,(3.4S),SFI,OHV

cardiagn.com

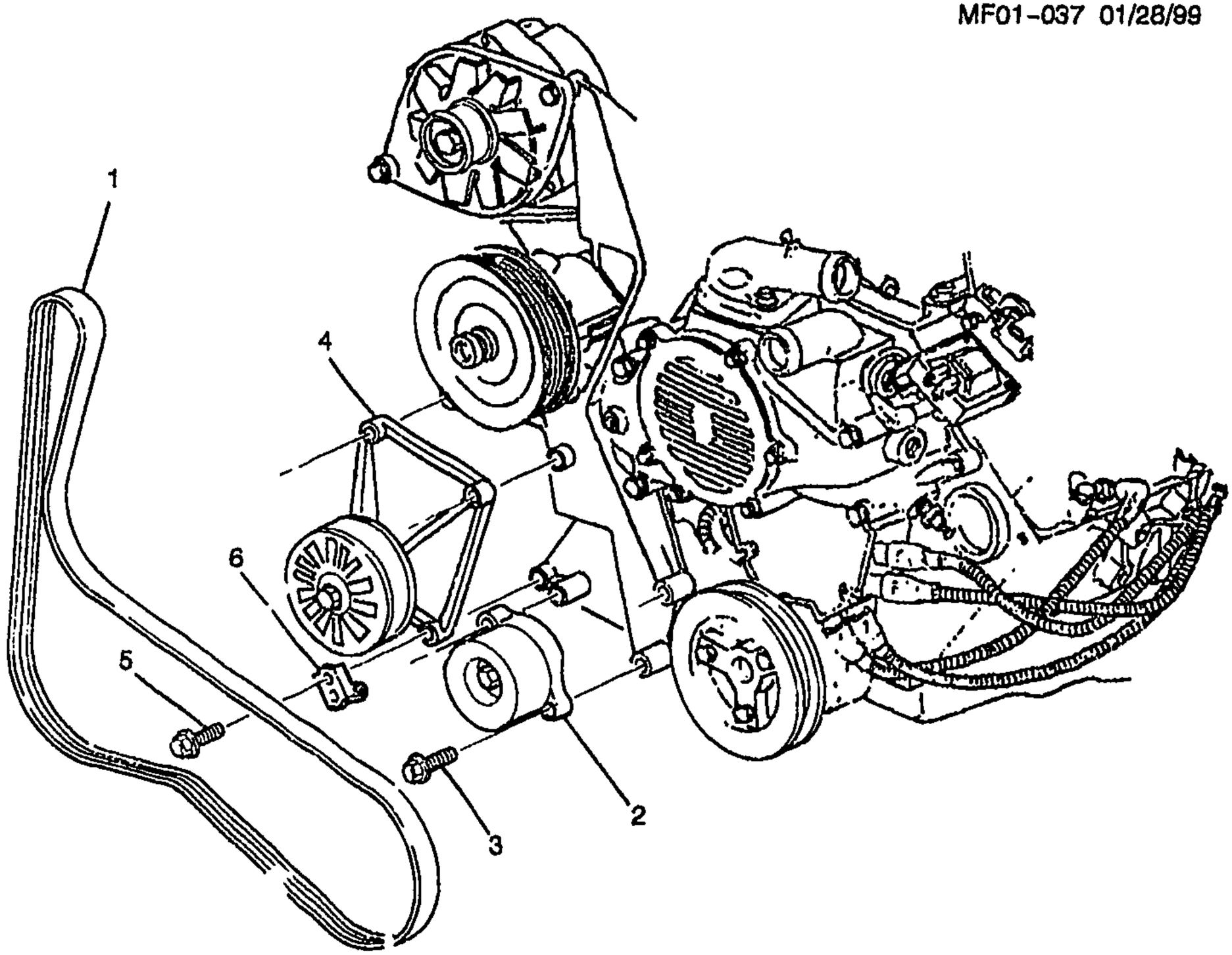

bk

MF01-037

1993-1997 F TENSIONER/DRIVE BELT & IDLER PULLEYS(LT1)

1.	2-B11	1.066	BELT, GEN & A/C CMPR & P/S PUMP (CODE UHY)	93	F (LT1)	1	10105307
	2-B11	1.066	BELT, GEN & A/C CMPR & P/S PUMP (CODE UHY) (FOR USE W/ 110MM A/C PUL;2ND DES 12550149 (126 MM PULL))	94	F (LT1, MM6) (1ST DES)	1	10105307
	2-B11	1.066	BELT, GEN & A/C CMPR & P/S PUMP (6-RIB) (USE W/LG 126MM A/C PUL; 1ST DES 10105307 (110 MM PUL))	94	F (LT1, MM6) (2ND DES)	1	12550149
	2-B11	1.066	BELT, GEN & A/C CMPR & P/S PUMP (6-RIB) (USE W/LG 126MM A/C PUL; 1ST DES 10105307 (110 MM PUL))	94	F (LT1, M30) (2ND DES)	1	12550149
	2-B11	1.066	BELT, GEN & A/C CMPR & P/S PUMP (6-RIB)	95-97	F (LT1)	1	12550149
2.	2-B10	1.060	TENSIONER, DRV BELT	93-97	F (LT1)	1	12552509

cardiagn.com

3.		8.900	BOLT, HWH, M8X1.25X40, SPL FULLTHD, AC PT, 10.9 PZOR (DRV BELT TENSR)	93-97	F	2	11515758
4.	2-B11	1.062	PULLEY, DRV BELT IDLER	93-95	F	1	10115875
	2-L13	2.274	PULLEY, GEN (AC-DELCO #1989104)	93-97	F	1	1989104
5.		8.900	BOLT, HFH, M10X1.5X40, 26 THD, 10.9, POR (NOT USED AFTER 1995)	93-95	F	3	14050422
		8.300	BOLT, HFH, M10X1.5X45, 25THD, 22.3OD, 10.9, 7114M, MACH RAISED SHOULDER (TRANSAXLE)	96-97	F	3	11515769
6.	2-L13	2.343	BRACKET, BAT CBL CLIP (9.242)	93-95	F (C41)	1	10188089
	2-N28	9.242	BRACKET, A/C CMPR & CNDSR HOSE CLIP	96-97	F (LT1, C60)	1	10188089

RPO DEFINITIONS

C41 – HEATER,OUTSIDE AIR,WITH FAN AND DEFROSTER
C60 – AIR CONDITIONER,FRONT,MANUAL CONTROLS
LT1 – ENGINE-GAS, 8 CYL, 5.7L(5.7P),MFI,HO
MM6 – TRANSMISSION MAN 6 SPD, BORG WARNER, 85MM, 1ST 2.66, 6TH 0.50, O/D
M30 – TRANSMISSION,AUTOMATIC 4 SPEED,4L60E,ELECTRONIC

cardiagn.com

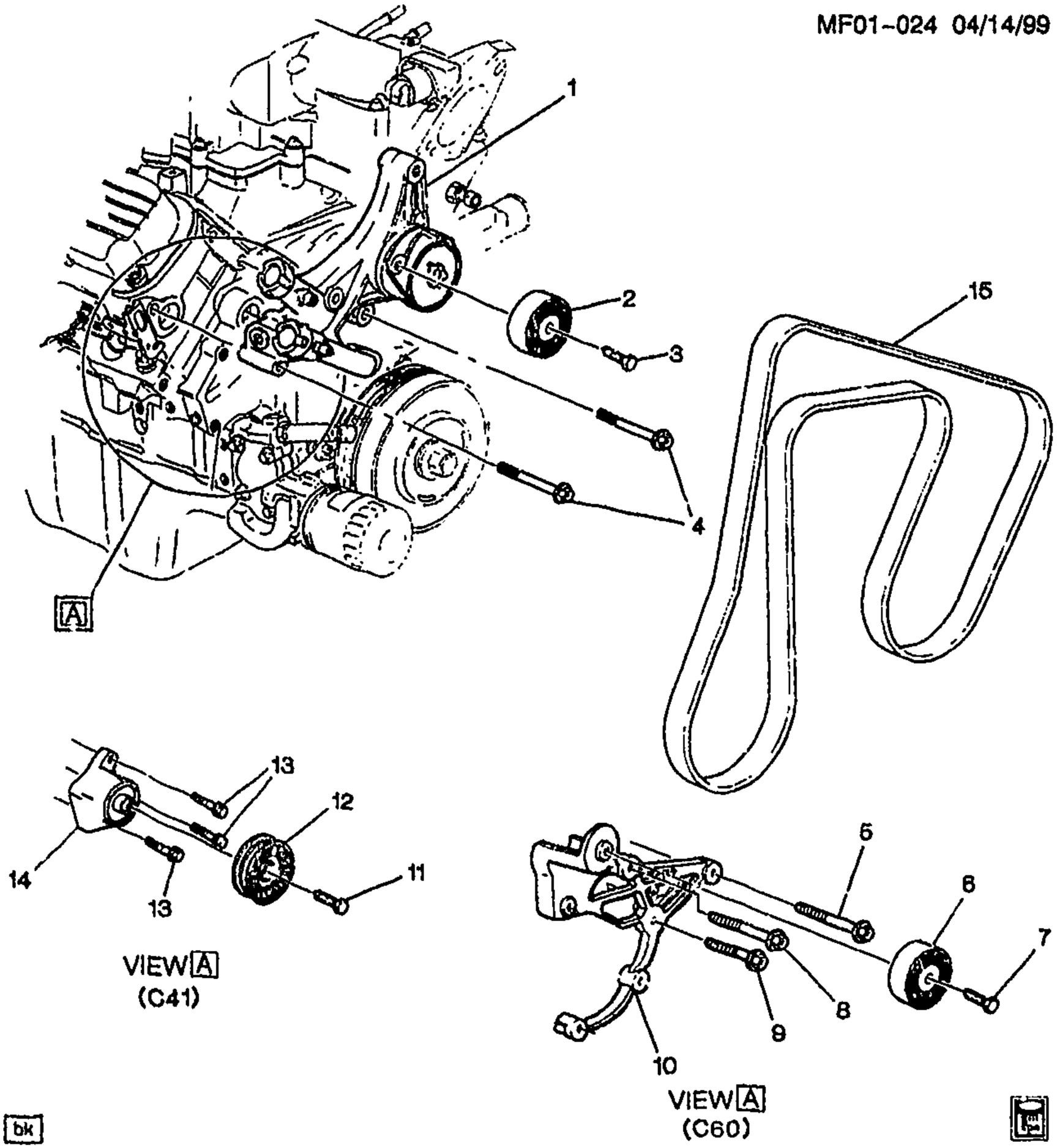

bk

MF01-024

1995-1996 F TENSIONER/DRIVE BELT & IDLER PULLEYS(L36)

1.	2-B10	1.060	TENSIONER, DRV BELT (SEE GRP 8.000 "HOSES & PIPES/HTR" FOR DETAILED ILLUSTRATION) (INCLS 2, 3)	95-96	F (L36)	1	24504818
2.	2-B11	1.062	PULLEY, BELT IDLER (PART OF 1) (PART OF ACCESSORY TENSIONER ASSEMBLY) (9.180) (AC-DELCO #15-4683)		.....		24506756
3.	2-B10	1.060	BOLT, BELT IDLER PUL (PART OF 1) (HFH, 10X1.5X27.9, 25) (LH SWAGEFORM THD, 34.5 OD, W/HTR INL/OUTL PORTS)	95-96	F (L36)	1	12537035

cardiagn.com

4.	2-B10	1.060	BOLT, DRV BELT TENSR (M10X1.5X60, 13MM CD, HEX HD, 10.9, GM500 STEEL) (HFH, M10X1.50X60, 26 THD, 22.3 OD, 10.9, 7114M, MACH, HDR-PT) (8.900)	95-96	F (L36)	2	11515772
5.		8.900	BOLT, HFH, M10X1.5X45, 25THD, 22.3OD, 10.9, 7114M, MACH RAISED SHOULDER (A/C CMPR FRT BRKT)	95-96	F (L36, C60)	1	11515769
6.	2-N27	9.180	PULLEY, A/C CMPR BELT IDLER (PART OF 10) (PART OF ACCESSORY TENSIONER ASSEMBLY) (AC-DELCO #15-4683)	95-96	F (L36, C60)	1	24506756
7.	2-N27	9.181	BOLT, A/C CMPR BELT IDLER PUL (PART OF 10) (1.060)	95-96	F (L36, C60)	1	24503929
8.		8.900	BOLT, HFH, M10X1.5X65, 22.3 OD, 7114M, RED BODY, 10.9, (A/C CMPR FRT BRKT)	95-96	F (L36, C60)	1	11516109
9.		8.900	BOLT-HFH, M8X1.25X40, 22 THD, 18 OD, 10.9, 7112M, MACH (A/C CMPR FRT BRKT)	95-96	F (L36, C60)	1	11515792
10.	2-N27	9.171	BRACKET, A/C CMPR FRT (INCLS 6, 7 (SEE MF09-034 "A/C COMPRESSOR MTG (L36) ")	95-96	F (L36)	1	24506755
11.		N.S.	BOLT, DRV BELT IDLER PUI (NOT USED IN 1995)		.....		
	2-B10	1.060	BOLT, DRV BELT IDLER PUL	96	F (L36, C41)	1	24503929
12.		N.S.	PULLEY, BELT IDLER (NOT USED IN 1995)		.....		
	2-B11	1.062	PULLEY, DRV BELT IDLER (GROOVED) (1.060)	96	F (L36, C41)	1	24502989
13.		N.S.	BOLT, DRV BELT IDLER PUL (NOT USED IN 1995)		(L36, C41)		
		8.900	BOLT, M8X1.25X26, 21.8 THD LEN, 180 OD, 10.9, POR (DRV BELT IDLER PUL)	96	(L36, C41)	3	11515757
14.		N.S.	BRACKET, BELT IDLER PUL (NOT USED IN 1995)		....		
	2-B11	1.062	BRACKET, BELT IDLER PUL	96	F (L36, C41)	1	24503454
15.		N.S.	BELT, W/PMP & GEN & P/S PUMP (NOT USED IN 1995)		(L36, C41)		
	2-B11	1.066	BELT, W/PMP & GEN & P/S PUMP (POLY V 6-RIB 2114MM) .	96	F (L36, C41)	1	24503247
	2-B11	1.066	BELT, W/PMP & A/C CMPR & GEN & P/S PUMP (6-RIB POLY V 2397MM X 20.5)	95-96	F (L36, C60)	1	24505327

RPO DEFINITIONS

C41 - HEATER,OUTSIDE AIR,WITH FAN AND DEFROSTER
C60 - AIR CONDITIONER,FRONT,MANUAL CONTROLS
L36 - ENGINE GAS, 6 CYL, 3.8K, MFI, V6, HO (ERV6 SERIES)

cardiagn.com

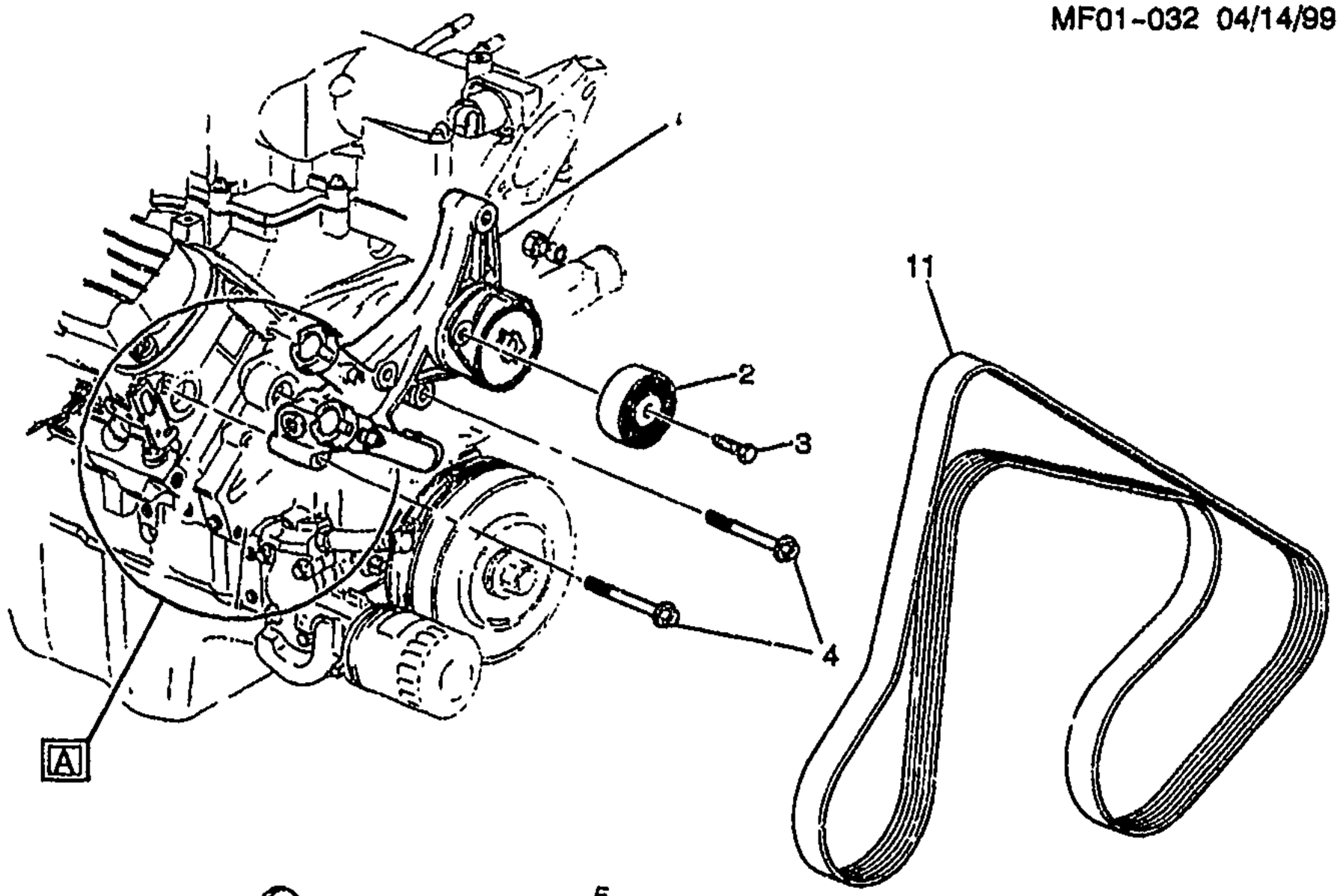

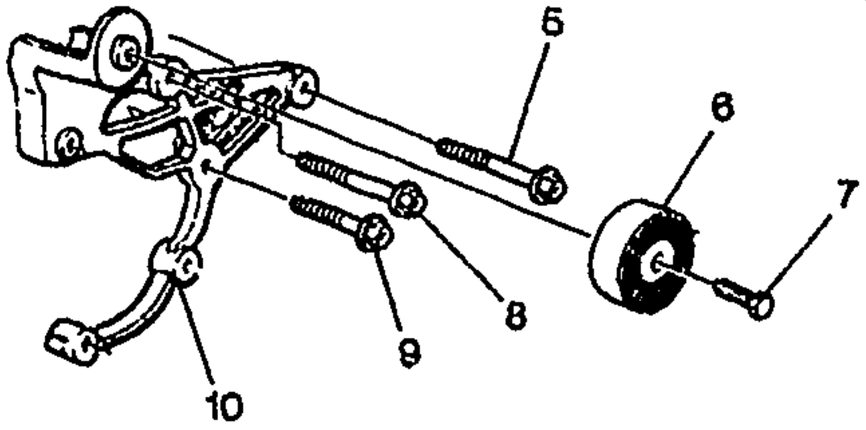

VIEW A
(C60)

bk

MF01-032

1997-2002 F TENSIONER/DRIVE BELT & IDLER PULLEYS(L36)

1.	2-B10	1.060	TENSIONER, DRV BELT (SEE GRP 8.000 "HOSES & PIPES/HTR" FOR DETAILED ILLUSTRATION) (INCLS 2, 3)	97	F (L36)	1	24504818
	2-B10	1.060	TENSIONER, DRV BELT (SEE GRP 8.000 "HOSES & PIPES/HTR" FOR DETAILED ILLUSTRATION) (INCLS 2, 3)	98	F (L36)	1	24506699
	2-B10	1.060	TENSIONER, DRV BELT (SEE GRP 8.000 "HOSES & PIPES/HTR" FOR DETAILED ILLUSTRATION) (INCLS 2, 3)	99-02	F (L36)	1	24508594
2.	2-B11	1.062	PULLEY, BELT IDLER (PART OF 1) (PART OF ACCESSORY TENSIONER ASSEMBLY) (9.180) (AC-DELCO #15-4683)	97-02	F (L36)	1	24506756

cardiagn.com

3.	2–B10	1.060	BOLT, BELT IDLER PUL (PART OF 1) (HFH, 10X1.5X27.9, 25) (LH SWAGEFORM THD, 34.5 OD, W/HTR INL/OUTL PORTS)	97–02	F (L36)	1	12537035
4.	2–B10	1.060	BOLT, DRV BELT TENSR (BOLT, HFH, M10X1.5X75, 25 THD, 22.3 OD, 10 P–POINT, 9.8, PZOR) (HFH M10X1.5X65) (8.900)	99–02	F (L36)	2	11516109
	2–B10	1.060	BOLT, DRV BELT TENSR (M10X1.5X60, 13MM OD, HEX HD, 10.9, GM500 STEEL) (HFH, M10X1.50X60, 26 THD, 22.3 OD, 10.9, 7114M, MACH, HDR–PT) (8.900)	97–98	F (L36)	2	11515772
5.		8.900	BOLT, HFH, M10X1.5X45, 25THD, 22.3OD, 10.9, 7114M, MACH RAISED SHOULDER (PART OF 10)	97–02	F (L36, C60)	1	11515769
6.	2–B11	1.062	PULLEY, BELT IDLER (PART OF 10) (PART OF ACCESSORY TENSIONER ASSEMBLY) (9.180) (AC–DELCO #15–4683)	97–02	F (L36)	1	24506756
7.	2–N27	9.181	BOLT, A/C CMPR BELT IDLER PUL (PART OF 10) (1.060)	97–02	F (L36, C60)	1	24503929
8.		8.900	BOLT, HFH, M10X1.5X65, 22.3 OD, 7114M, RED BODY, 10.9, (A/C CMPR FRT BRKT)	97–02	F (L36, C60)	1	11516109
9.		8.900	BOLT HFH, M8X1.25X40, 22 THD, 18 OD, 10.9, 7112M, MACH (A/C CMPR FRT BRKT)	97–02	F (L36, C60)	1	11515792
10.	2–N27	9.171	BRACKET, A/C CMPR FRT (INCLS 5, 6, 7 (SEE MF09–034 "A/C COMPRESSOR MTG (L36) ")	97–02	F (L36)	1	24506755
11.	2- B11	1.066	BELT, W/PMP & A/C CMPR & GEN & P/S PUMP (6–RIB POLY V 2397MM X 20.5)	97–02	F (L36)	1	24505327

RPO DEFINITIONS

C60 – AIR CONDITIONER,FRONT,MANUAL CONTROLS
L36 – ENGINE GAS, 6 CYL, 3.8K, MFI, V6, HO (ERV6 SERIES)

cardiagn.com

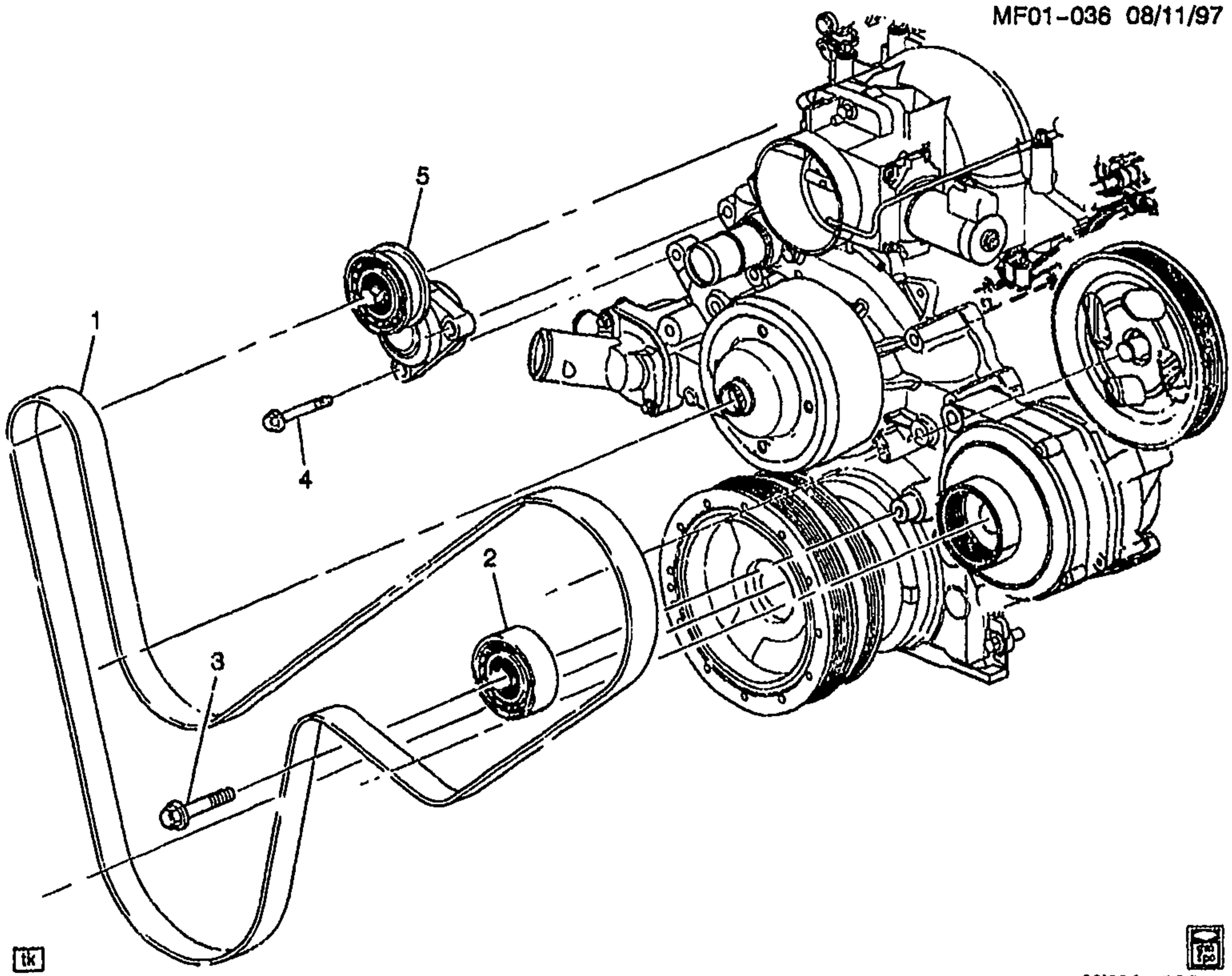

MF01-036

1998-2002 F TENSIONER/DRIVE BELT & IDLER PULLEYS(LS1)

1.	2-B11	1.066	BELT, W/PMP & GEN & P/S PUMP	98-99	F (LS1)	1	12557562
	2-B11	1.066	BELT, W/PMP & GEN & P/S PUMP	00-02	F (LS1)	1	12562626
2.	2-B11	1.062	PULLEY, BELT IDLER	98-99	F (LS1)	1	12564401
	2-B11	1.062	PULLEY, BELT IDLER	00	F (2ND DES)	1	12563326
	2-B11	1.062	PULLEY, BELT IDLER	00	F (1ST DES)	1	12564401
	2-B11	1.062	PULLEY, BELT IDLER	01-02	F (LS1)	1	12563326
3.		8.900	BOLT, HFH, M10X1.5X70, 30 THD, 22.3 OD, 9.8 MAT, 7114M FIN, MACH, REDUCED BODY (GEN BRKT)	98-02	F	1	11516356
4.		8.900	BOLT, HFH, M10X1.5X40, 30 THD, 22.3 OD, 10.9 MAT, 7114M FIN, MACH, RED BDY (DPV BELT TENS)	98-02	F	2	11515768
5.	2-B10	1.060	TENSIONER, DRV BELT	98-02	F (LS1)	1	12555424

RPO DEFINITIONS

LS1 – ENGINE GAS, 3 CYL, 5.7L, SFI, ALUMINUM ENGINE

cardiagn.com

ILLUSTRATION INDEX

	TITLE	GRID
1993–1994	F STARTER MOTOR (LT1/5.7P)	3–E5
1993–1995	F STARTER MOTOR (L32/4.3S)	3–E7
1995–1997	F STARTER MOTOR (LT1/5.7P)	3–E9
1995–1997	F STARTER MOTOR (L36/3.8K)	3–E9
1993–1995	F STARTER MOTOR MOUNTING (L32/3.4S)	3–E11
1993–1997	F STARTER MOTOR MOUNTING (LT1/5.7P)	3–E13
1995	F STARTER MOTOR MOUNTING (L36/3.8K)	3–E15
1996–2002	F STARTER MOTOR MOUNTING (L36/3.8K)	3–E17
1998–2002	F STARTER MOTOR MOUNTING (LS1/5.7G)	3–E19
1993–1995	F GENERATOR ASM (L32)(K68)	3–E21
1996–2002	F GENERATOR ASM (L36/3.8K)(K68)	3–E21
1993–1997	F GENERATOR ASM (LT1/5.7P)	3–E23
1993–1995	F GENERATOR MOUNTING (L32/3.4S)	3–E27
1993–1997	F GENERATOR MOUNTING (LT1/5.7P)	3–F2
1995–2002	F GENERATOR MOUNTING (L36/3.8K)	3–F4
1998–2002	F GENERATOR MOUNTING (LS1/5.7G)	3–F6
1993–1994	F DISTRIBUTOR/IGNITION (LT1)	3–F8
1995–1997	F DISTRIBUTOR/IGNITION (LT1)	3–F9
1993	F COIL & MODULE/IGNITION (LT1/5.7P)	3–F10
1993–1995	F COIL & MODULE/IGNITION (L32/3.4S)	3–F11
1994–1995	F COIL & MODULE/IGNITION (LT1/5.7P)	3–F12
1995–2002	F COIL & MODULE/IGNITION (L36/3.8K)	3–F14
1996–1997	F COIL & MODULE/IGNITION (LT1/5.7P)	3–F15
1998	F COIL ASM/DIRECT IGNITION (LS1/5.7G)	3–F17
1993–1997	F NORMAL MAINTENANCE REPLACEMENT PARTS (LT1/5.7P)	3–F18
1997–2002	F NORMAL MAINTENANCE REPLACEMENT PARTS (L36/3.8K)	3–F20
1998–2002	F NORMAL MAINTENANCE REPLACEMENT PARTS (LS1/5.7G)	3–F22
1993	F BATTERY CABLES & MOUNTING (LT1/5.7P)	3–F24
1993–1995	F BATTERY CABLES & MOUNTING (L32/3.4S)	3–F26
1994–1997	F BATTERY CABLES & MOUNTING (LT1/5.7P)	3–G2
1995–1997	F BATTERY CABLES & MOUNTING (L36/3.8K)	3–G4
1998–2002	F BATTERY CABLES & MOUNTING (L36/3.8K)	3–G6
1998–2002	F BATTERY CABLES & MOUNTING (LS1/5.7G)	3–G8
1993–1995	F ENGINE ELECTRICAL L32/(3.4L)	3–G10
1993–1997	F ENGINE ELECTRICAL LT1/(5.7P)	3–G14
1995	F ENGINE ELECTRICAL L36/(3.8K)	3–G18
1996–2002	F ENGINE ELECTRICAL L36/(3.8K)	3–G20
1993	F RELAYS	3–G24
1994–1996	F RELAYS	3–H2
1997–1999	F RELAYS	3–H8
2000–2002	F RELAYS	3–H15
1993–2002	F WIRING HARNESS	3–I2
1993–1997	F LAMPS/FRONT	3–I19
1998–2002	F LAMPS/FRONT	3–I23

cardiagn.com

	TITLE	GRID
1993–1997	F LAMPS/REAR	3–J2
1998–2002	F LAMPS/REAR (DOMESTIC)	3–J2
1998–2002	F LAMPS/REAR (EXPORT)	3–J7

cardiagn.com

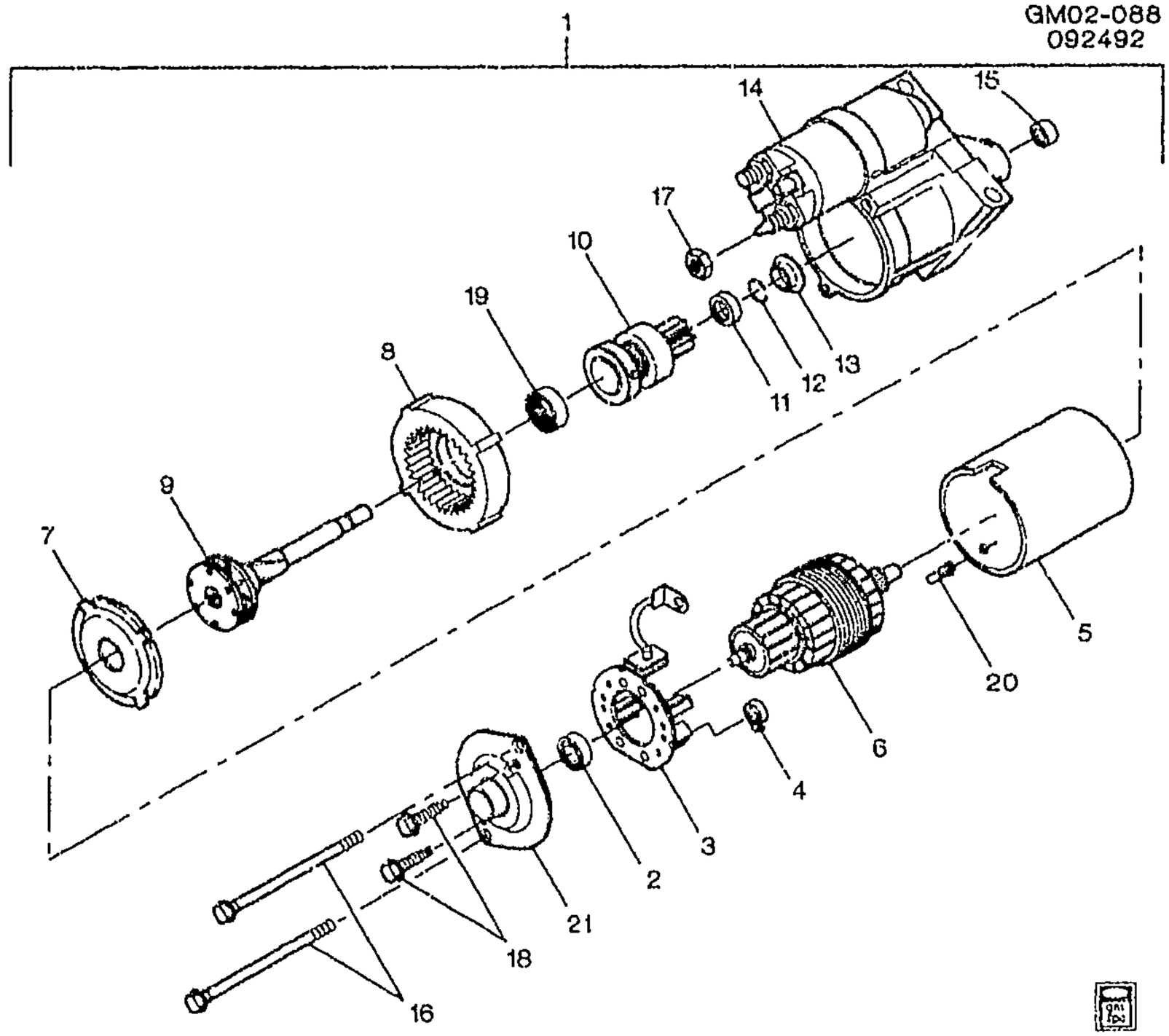

1993–1994 F STARTER MOTOR (LT1/5.7P)

1.		N.S.	STARTER, (SERVICED BY ITEMS 2–21)	93–94			
	3–A9	2.041	STARTER, (REMAN) (INCLS 14) (AC–DELCO #323–480)	93–94	F (LT1)	1	
2.	3–A10	2.067	BEARING, STRTR AMT CMTR END (2.083) (AC–DELCO #9440924)	93–94	F (LT1)	1	9440924
3.	3–A10	2.052	HOLDER, STRTR GND BRUSH (AC–DELCO #D780)	93–94	F (LT1)	1	10472527
4.	3–A10	2.053	SPRING, STRTR BRUSH (AC–DELCO #D4956)	93–94	F (LT1)	4	10498543
5.		N.S.	FRAME, STRTR (W/FIELD)				
6.	3–A10	2.043	ARMATURE, STRTR (AC–DELCO #D4153)	93–94	F (LT1)	1	10498616
7.	3–A11	2.085	SHIELD, STRTR DRV GR (2.086) (AC–DELCO #10469185)	93–94	F (LT1)	1	10469185
8.	3–A11	2.086	GEAR, STRTR DRV (W/BRG) (AC–DELCO #10496202)	93–94	F (LT1)	1	10496202
9.	3–A11	2.086	SHAFT, STRTR DRV (INCLS 10) (W/GR) (AC–DELCO #10472014)	93–94	F (LT1)	1	10472014

cardiagn.com

10.	3-A11	2.086	DRIVE, STRTR (PART OF 9) (AC-DELCO #D2048)	93-94	F (LT1)	1	10469173
11.	3-A10	2.063	COLLAR, STRTR DRV STOP (AC-DELCO #1927849)	93-94	F	1	1927849
12.	3-A10	2.063	RETAINER, STRTR DRV STOP COLR (AC-DELCO #1927848) ..	93-94	F	1	1927848
13.	3-A10	2.063	COLLAR, STRTR DRV THR (AC-DELCO #10495828)	93-94	F (LT1)	1	10495828
14.		N.S.	HOUSING, STRTR DRV (STARTER SOLENOID-SERV ONLY-PART OF DRV HSG) (PART OF 1)		.....		
15.	3-A11	2.083	BEARING, STRTR AMT DRV END (AC-DELCO #9440923) ...	93-94	F (LT1)	1	9440923
16.	3-A11	2.077	BOLT, STRTR POLE SHOE (M6 X 1.0 X 121.0, 20.5 THD) (AC-DELCO #1989234)	93-94	F (LT1)	2	1989234
17.		9.915	NUT-HEX, M8X1.25X4.0, BRASS, PLAIN (STRTR SOL START TERM) (AC-DELCO #11509480)	93-94	.....	AR	11509480
18.	3-A10	2.052	BOLT, STRTR GND BRUSH (M5X0.8X9.0, 8.2 THD) (AC-DELCO #1989233)	93-94	F (LT1)	2	1989233
19.	3-A11	2.083	BEARING, STRTR DRV SHF CTR (AC-DELCO #9440922)	93-94	F (LT1)	1	9440922
20.	3-A10	2.067	TUBE, STRTR DRN (2.049) (AC-DELCO #10497538)	93-94	F (LT1)	1	10497538
21.	3-A10	2.067	FRAME, STRTR CMTR END (AC-DELCO #10472023)	93-94	F (LT1)	1	10472023

RPO DEFINITIONS
LT1 - ENGINE-GAS, 8 CYL, 5.7L(5.7P),MFI,HO

cardiagn.com

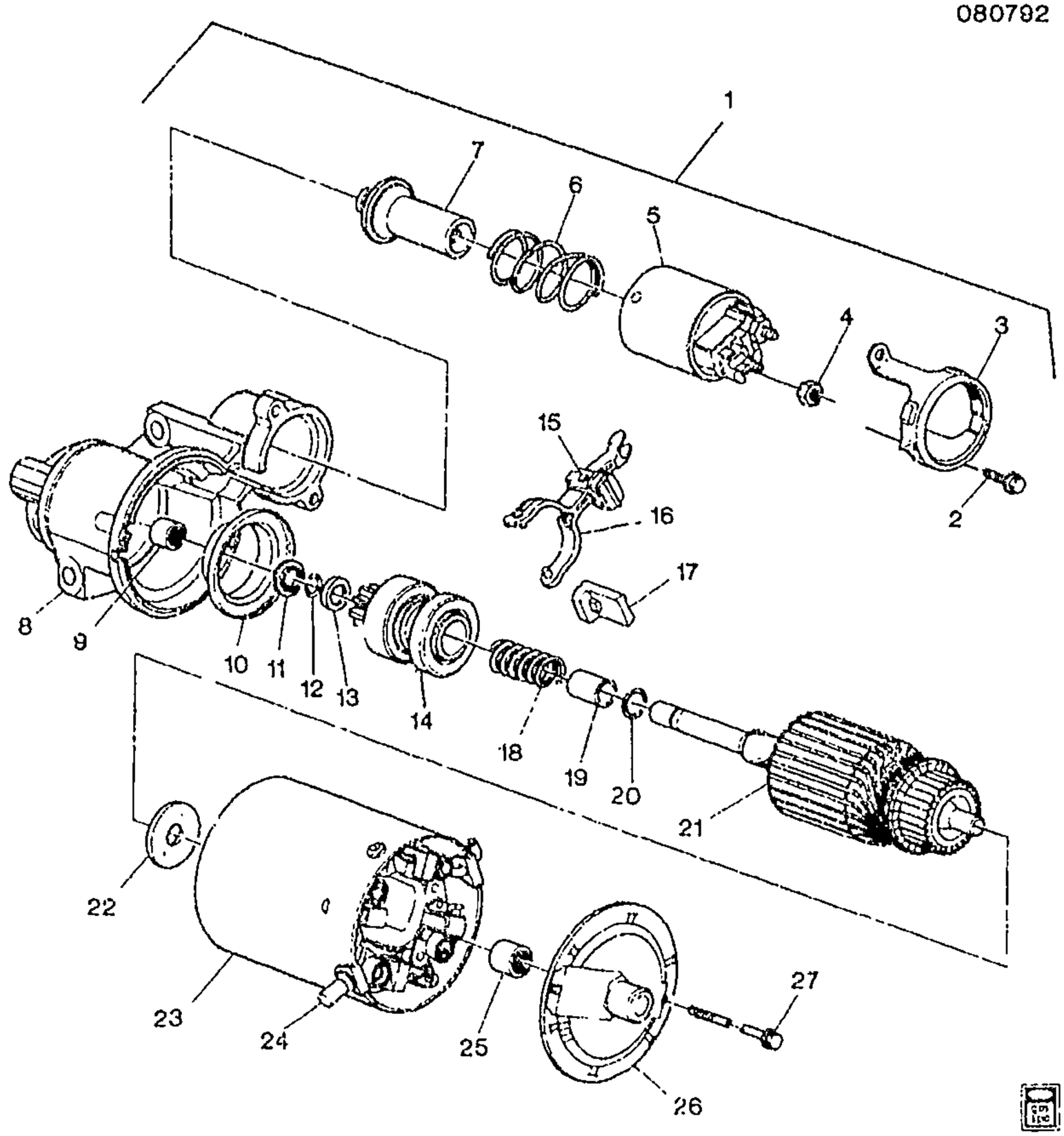

GM02-090

1993-1995 F STARTER MOTOR (L32/4.3S)

1.	3-A9	2.041	STARTER, (REMAN) (SERVICED BY ITEMS 2-27) (AC-DELCO #323-1068)	93-95	F (L32)	1	10465393
2.	3-A11	2.102	BOLT, STRTR SOL SW (EXT TORX W/FLANGE, 1/4-20 X 1, 27/64 OD TRI-LOBE TAP) (2.100) (AC-DELCO #10467625)	93-95	F (L32)	1	10467625
3.	3-A11	2.102	CLAMP, STRTR SOL MTG (2.100) (AC-DELCO #10470161)	93-95	F (L32)	1	10470161
4.		8.915	NUT-HEX, M8X1.25X4.0, BRASS, PLAIN (STRTR LEAD TO SW ATCH) (AC-DELCO #11509480)	93-95		1	11509480
5.	3-A11	2.100	SWITCH, STRTR SOL (INCLS 6, 7) (AC-DELCO #D936A)	93-95	F (L32)	1	1114591

cardiagn.com

6.	3-A11	2.108	**SPRING**, STRTR SOL SW PLGR (PART OF 5) (AC-DELCO #1989232)	93-95	F (L32)	1	1989232
7.	3-A11	2.113	**PLUNGER**, STRTR SOL SW (PART OF 5) (AC-DELCO #10473793)	93-95	F (L32)	1	10473793
8.	3-A11	2.085	**HOUSING**, STRTR DRV (AC-DELCO #10475307)	93-95	F (L32)	1	10475307
9.		N.S.	**BEARING**, STRTR AMT DRV END				
10.	3-A9	2.042	**SHIELD**, STRTR (DRV GR) (2.085) (AC-DELCO #10467629)	93-95	F (L32)	1	10467629
11.	3-A10	2.063	**COLLAR**, STRTR DRV THR (AC-DELCO #10495828)	93-95	F (L32)	1	10495828
12.	3-A10	2.063	**RETAINER**, STRTR DRV STOP COLR (AC-DELCO #1927848)	93-94	F	1	1927848
	3-A10	2.063	**RETAINER**, STRTR DRV STOP COLR (AC-DELCO #1927848)	95	F (L32)	1	1927848
13.	3-A10	2.063	**COLLAR**, STRTR DRV STOP (AC-DELCO #1927849)	93-94	F	1	1927849
	3-A10	2.063	**COLLAR**, STRTR DRV STOP (AC-DELCO #1927849)	95	F (L32)	1	1927849
14.	3-A11	2.086	**DRIVE**, STRTR (INCLS 18-20) (AC-DELCO #D2050)	93-95	F (L32)	1	10473700
15.	3-A11	2.108	**RETAINER**, STRTR SHFT LVR SHF (AC-DELCO #10473702)	93-95	F (L32)	1	10473702
16.	3-A11	2.108	**LEVER**, STRTR SHFT (AC-DELCO #10473701)	93-95	F (L32)	1	10473701
17.	3-A11	2.108	**PLUG**, STRTR DRV HSG (AC-DELCO #10473703)	93-95	F (L32)	1	10473703
18.		N.S.	**SPRING**, STRTR DRV ASST (PART OF 14)				
19.		N.S.	**BEARING**, STRTR DRV SHF DRV END (PART OF 14)				
20.		N.S.	**WIRE**, STRTR DRV LK (PART OF 14)				
21.	3-A10	2.043	**ARMATURE**, STRTR (AC-DELCO #D4158)	93-95	F (L32)	1	10467708
22.	3-A10	2.063	**WASHER**, STRTR AMT BRK CMTR END	93-95	F (L32)	1	10499094
23.	3-A10	2.049	**FRAME**, STRTR (W/FIELD) (2.067) (AC-DELCO #D4261)	93-95	F (L32)	1	10467602
24.		N.S.	**TUBE**, STRTR DRN				
25.		N.S.	**BEARING**, STRTR AMT CMTR END				
26.	3-A10	2.067	**FRAME**, STRTR CMTR END (AC-DELCO #D4310)	93-95	F (L32)	1	1978292
27.	3-A11	2.077	**BOLT**, STRTR THRU (10-24X5.35) (AC-DELCO #1985150)	93-95	F (L32)	1	1985150

RPO DEFINITIONS
L32 - ENGINE,3.4L,V6,(3.4S) SFI,OHV

cardiagn.com

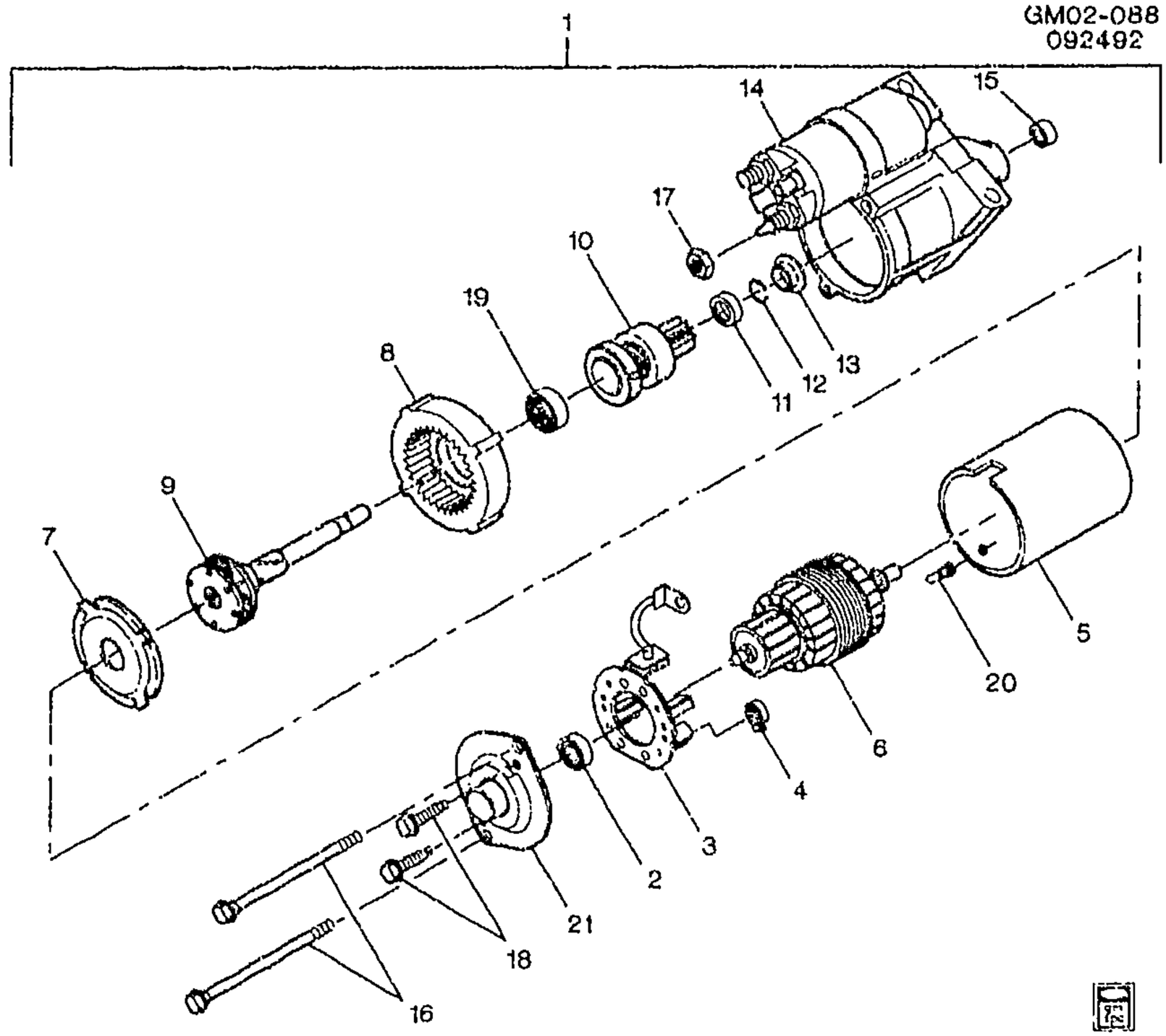

GM02-0882

1995-1997 F STARTER MOTOR (LT1/5.7P)
1995-1997 F STARTER MOTOR (L36/3.8K)

1.	3-A9	2.041	STARTER, (REMAN) (INCL 2-15, 18-21) (AC-DELCO #323-501)	95-97	F (L36)	1	10465309
	3-A9	2.041	STARTER, (REMAN) (PROD 9000798) (INCL 2-15, 18-21) (AC-DELCO #323-488)	95-97	F (LT1)	1	10465293
2.		N.S.	BEARING, STRTR AMT CMTR END (PART OF 1)				
3.		N.S.	HOLDER, STRTR GND BRUSH (PART OF 1)				
4.		N.S.	SPRING, STRTR BRUSH (PART OF 1)				
5.		N.S.	FRAME, STRTR (W/FIELD) (PART OF 1)				
6.		N.S.	ARMATURE, STRTR (PART OF 1)				
7.		N.S.	SHIELD, STRTR DRV GR (PART OF 1)				
8.		N.S.	GEAR, STRTR DRV (W/BRG) (PART OF 1)				
9.		N.S.	SHAFT, STRTR DRV (PART OF 1)				
10.		N.S.	DRIVE, STRTR (PART OF 1)				

cardiagn.com

11.	N.S.	**COLLAR**, STRTR DRV STOP (PART OF 1)			
12.	N.S.	**RETAINER**, STRTR DRV STOP COLR (PART OF 1)			
13.	N.S.	**COLLAR**, STRTR DRV THR (PART OF 1)			
14.	N.S.	**HOUSING**, STRTR DRV (PART OF 1) (STARTER SOLENOID NOT SERVICED, PART OF STARTER MOTOR.)			
15.	N.S.	**BEARING**, STRTR AMT DRV END (PART OF 1)			
16.	N.S.	**BOLT**, STRTR POLE SHOE			
17.	8.915	**NUT-HEX**, M8X1.25X4.0, BRASS, PLAIN (STRTR SOL START TERM) (AC-DELCO #11509480)	95-97		AR 11509480
18.	N.S.	**BOLT**, STRTR BRUSH HLDR SUPT (PART OF 1)			
19.	N.S.	**BEARING**, STRTR DRV SHF CTR (PART OF 1)			
20.	N.S.	**TUBE**, STRTR DRN (PART OF 1)			
21.	N.S.	**FRAME**, STRTR CMTR END (PART OF 1)			

RPO DEFINITIONS

LT1 – ENGINE-GAS, 8 CYL, 5.7L(5.7P),MFI,HO

L36 – ENGINE GAS, 6 CYL, 3.8K, MFI, V6, HO (ERV6 SERIES)

cardiagn.com

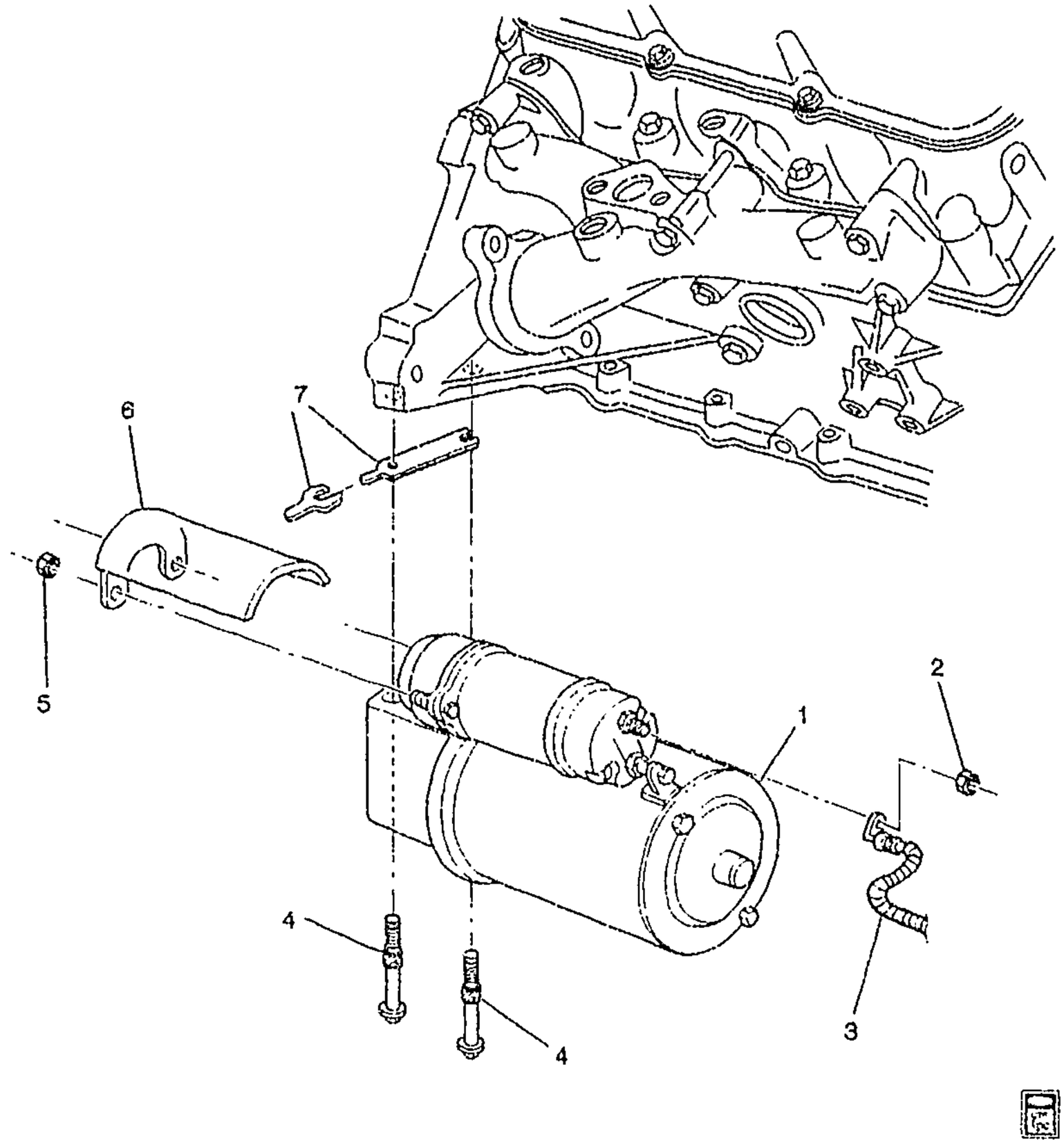

MF02-024

1993-1995 F STARTER MOTOR MOUNTING (L32/3.4S)

1.	3-A9	2.041	STARTER, (REMAN) (CPS (SEE DETAILED ILLUSTRATED VIEW IN THIS GROUP) (AC-DELCO #323-1068)	93-95	F (L32)	1	10465393
2.		8.915	NUT-HEX, M8X1.25X4.0, BRASS, PLAIN (BAT POS CBL) (AC-DELCO #11509480)	93	F	1	11509480
	3-B3	2.343	NUT, BAT POS CBL (8X1.25X5.95 BRASS)	94-95	F	1	21021808
3.	3-B3	2.342	CABLE, BAT POS (39"LG) (W/O CLIPS & CONDUIT) (AC-DELCO #4SX39-2H)	93-95	F (L32)	1	12157166

cardiagn.com

	3-B2	2.341	CABLE, BAT NEG (39"LG) (W/O CLIPS & CONDUIT) (AC-DELCO #4XX39-1C)	93-95	F (L32)	1	12157374
4.	3-A9	2.042	BOLT, STRTR (M10X1.5X102 9.8 ZP)	93-95	F	2	12337929
5.	3-A9	2.042	NUT, STRTR SHLD (8.917)	93-95	F (L32)	2	10108651
6.	3-A9	2.042	SHIELD, STRTR (AC-DELCO #10468258)	93-95	F (L32)	1	10469258
7.	3-A9	2.042	SHIM, STRTR (USE FOR HEAVY DUTY REPAIR) (1.0MM THICK)	93-95	F (L32)	AR	14057993

RPO DEFINITIONS
L32 - ENGINE,3.4L,V6,(3.4S),SFI,OHV

cardiagn.com

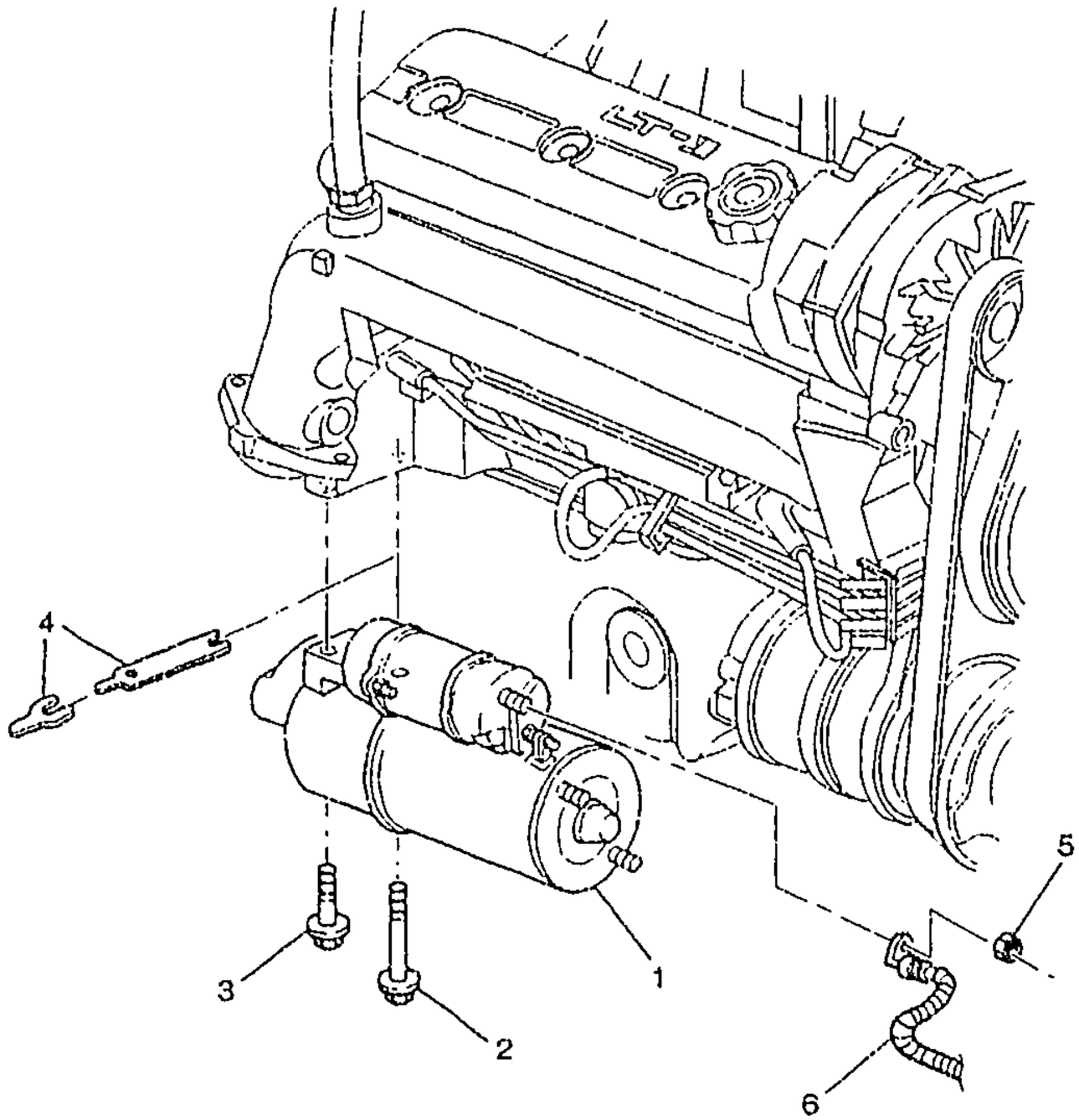

MF02-023

1993-1997 F STARTER MOTOR MOUNTING (LT1/5.7P)

1.	3-A9	2.041	STARTER, (REMAN) (NO CPS) (AC-DELCO #323-480)	93-94	F (LT1)	1	10465143
	3-A9	2.041	STARTER, (REMAN) (PROD 9000798) (NO CPS) (AC-DELCO #323-488)	95-97	F (LT1)	1	10465293
2.	3-A9	2.042	BOLT, STRTR (INBOARD HOLE) (3/8-16X1.87)	93-94	F (LT1)	1	14097279
	3-A9	2.042	BOLT, STRTR (INBOARD HOLE) (3/8-16X4.33)	95-97	F (LT1)	1	12338064
3.	3-A9	2.042	BOLT, STRTR (OUTBOARD HOLE) (3/8-16X4 11/16)	93-94	F (LT1)	1	14097278
	3-A9	2.042	BOLT, STRTR (OUTBOARD HOLE) (3/8-16 X 1.33)	95-97	F	1	14037733
4.	3-A9	2.042	SHIM, STRTR (1 X 1 7/8 X 5/32, STEEL)	93-97	F (LT1)	AR	1246249
	3-A9	2.042	SHIM, STRTR (24.4X106.7X0.38 STL) (FULL)	93-97	F (LT1)	AR	10008053
5.		8.915	NUT-HEX, M8X1.25X4.0, BRASS, PLAIN (BAT POS CBL) (AC-DELCO #11509480)	93	F	1	11509480

cardiagn.com

							MF02-023
	3-B3	2.343	NUT, BAT POS CBL (8X1.25X5.95 BRASS)	94-97	F	1	21021808
5.	3-B3	2.342	CABLE, BAT (TO BAT POS) (45"LG) (W/O CLIPS & CONDUIT) (AC-DELCO #4SX45-2T)	93-97	F (LT1)	1	12157373

RPO DEFINITIONS

LT1 – ENGINE-GAS, 8 CYL, 5.7L(5.7P),MFI,HO

cardiagn.com

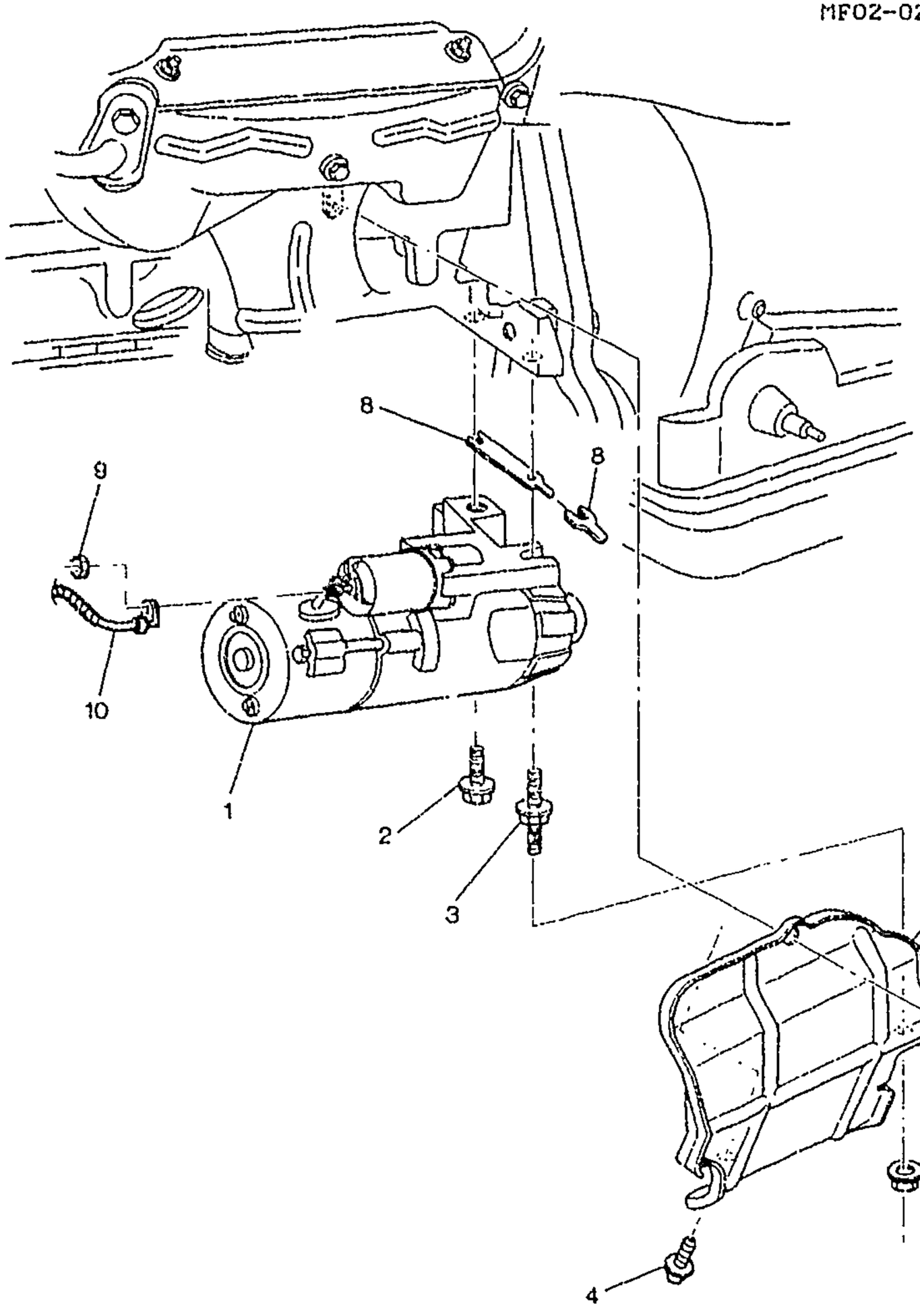

MF02-022

1995 F STARTER MOTOR MOUNTING (L36/3.8K)

1.	3-A9	2.041	STARTER, (REMAN) (AC-DELCO #323-501)	95 F (L36)	1	10465309
2.	3-A9	2.042	BOLT, STRTR (TO CYL BLK) (M10X1.5X118) (#1 INBOARD HOLE)	95 F (L36)	1	14086077

cardiagn.com

3.	3–A9	2.041	STUD, STRTR (OUTBOARD) (2.042)	95	F (L36)	1	24503612
4.		8.977	SCREW, HEX W/FLAT WA (STRTR SHLD)	95	F (L36)	1	12337828
5.		8.917	NUT, HFH, M8X1.25X8.8, 17.9 OD, 10 DIN, PREV TORQUE (STRTR SHLD)	95	F	1	11517031
6.	3–A9	2.042	BOLT, STRTR SHLD (HFH, 8X1.25X11, 10 6G THD, 18 OD, 10.9, PC)	95	F	1	24503654
7.	3–A9	2.042	SHIELD, STRTR	95	F (L36)	1	24503661
8.	3–A9	2.042	SHIM, STRTR (USE FOR HEAVY DUTY REPAIR) (1.0MM THICK)	95	F (L36)	AR	14057993
9.		8.915	NUT–METRIC STYLE 2 HEX, M8X1.25 (BAT POS CBL)	95	F	1	11501085
10.	3–B3	2.342	CABLE, BAT POS (AC–DELCO #2SX67–2)	95	F (L36)	1	12157081

RPO DEFINITIONS
L36 – ENGINE GAS, 6 CYL, 3.8K, MFI, V6, HO (ERV6 SERIES)

cardiagn.com

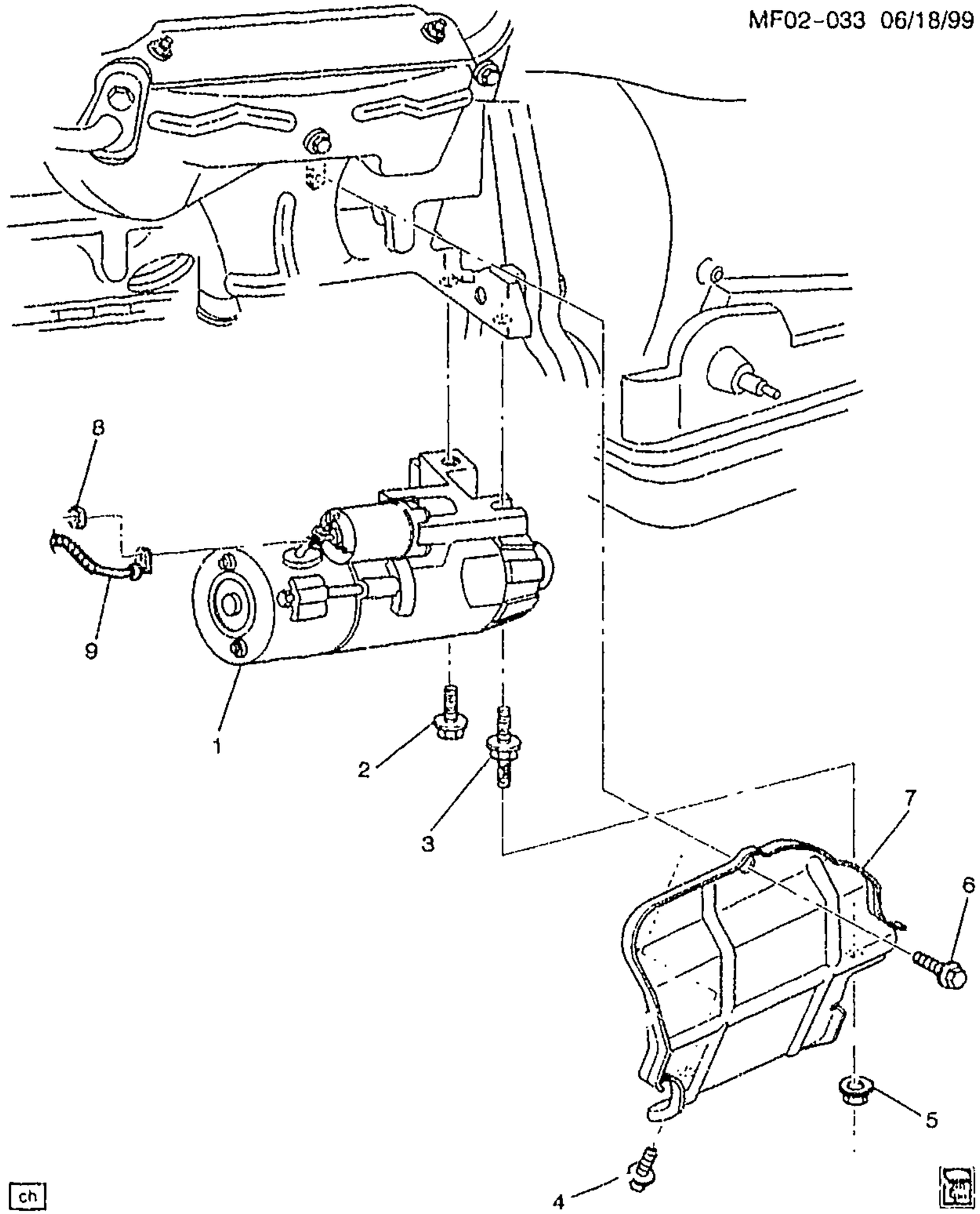

ch

MF02-033

1996-2002 F STARTER MOTOR MOUNTING (L36/3.8K)

1.	3-A9	2.041	STARTER, (REMAN) (AC-DELCO #323-501)	96-97	F (L36)	1	10465309
	3-A9	2.041	STARTER, (REMAN) (AC-DELCO #323-1191)	98-01	F (L36)	1	10465421
	3-A9	2.041	STARTER (REMAN) (AC-DELCO #323-1437)	02	F (L36)	1	10465525
2.	3-A9	2.042	BOLT, STRTR (TO CYL BLK) (M10X1.5X118) (#1 INBOARD HOLE)	96-02	F (L36)	1	14086077

cardiagn.com

3.	3-A9	2.041	STUD, STRTR (OUTBOARD) (2.042)	96-02	F (L36)	1	24503612
4.		8.977	SCREW, HEX W/FLAT WA (STRTR SHLD)	96-02	F (L36)	1	12337828
5.		8.917	NUT, HFH, M8X1.25X8.8, 17.9 OD, 10 DIN, PREV TORQUE (STRTR SHLD)	96-02	F	1	11517031
6.	3-A9	2.042	BOLT, STRTR SHLD (HFH, 8X1.25X11, 10 6G THD, 18 OD, 10.9, PC)	96-02	F	1	24503654
7.	3-A9	2.042	SHIELD, STRTR	96-02	F (L36)	1	24503661
8.		8.915	NUT-METRIC STYLE 2 HEX, M8X1.25 (BAT POS CBL)	96-02	F	1	11501085
9.	3-B3	2.342	CABLE, BAT POS (AC-DELCO #2SX67-2)	96-97	F (L36)	1	12157081
	3-B3	2.342	CABLE, BAT POS (64"LG) (AC-DELCO #2SX64-2F)	98-02	F (L36)	1	15321052

RPO DEFINITIONS
L36 - ENGINE GAS, 6 CYL, 3.8K, MFI, V6, HO (ERV6 SERIES)

cardiagn.com

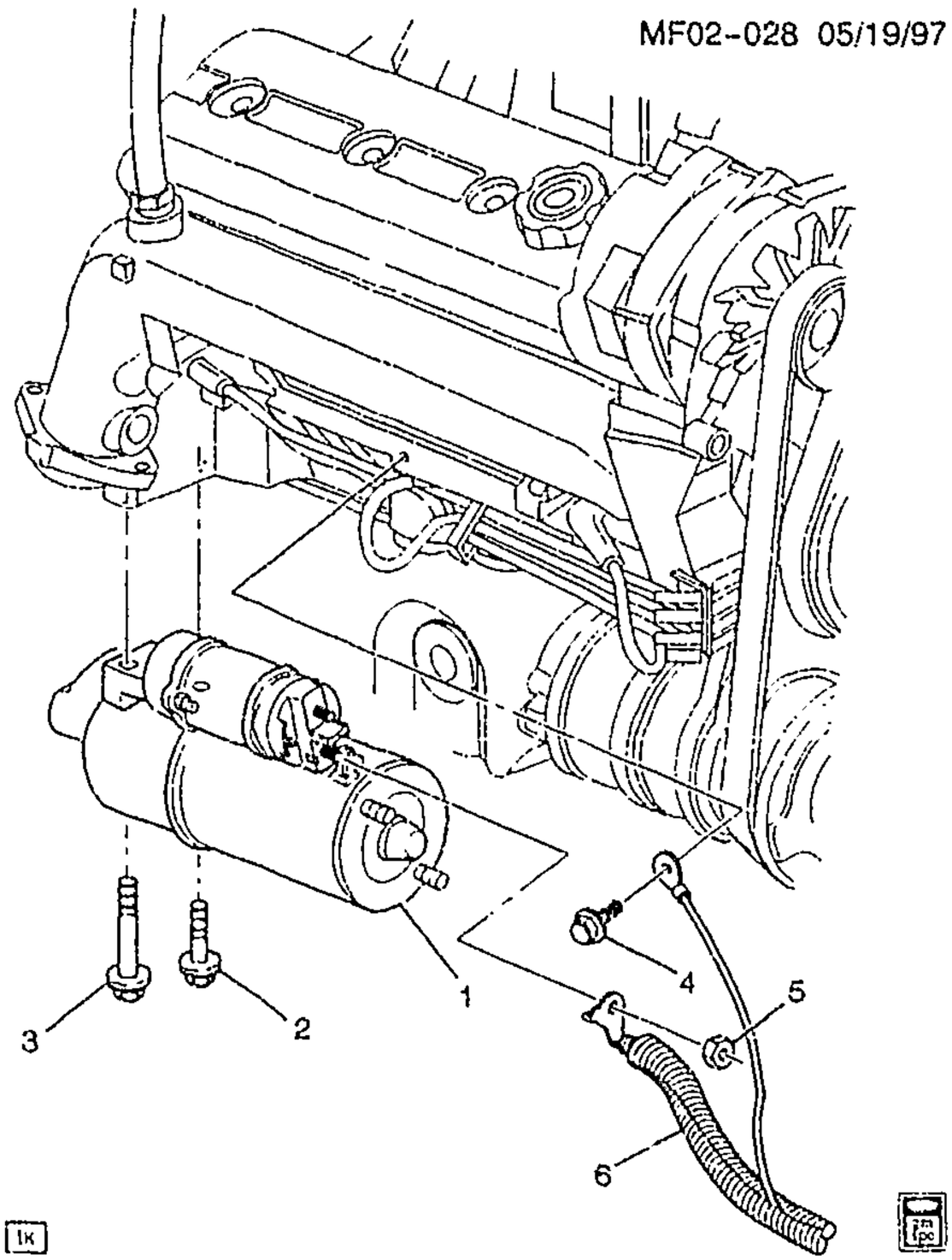

MF02-028

1998-2002 F STARTER MOTOR MOUNTING (LS1/5.7G)

1.	3-A9	2.041	STARTER, (REMAN) (NO CPS) (AC-DELCO #323-1063)	99-01	F (LS1)	1	10465385
	3-A9	2.041	STARTER, (REMAN) (NO CPS) (AC-DELCO #323-1450)	02	F (LS1)	1	10465547
2.	3-A9	2.042	BOLT, STRTR (INBOARD HOLE) (INBOARD)	98	F (LS1)	1	12555160
	3-A9	2.042	BOLT, STRTR (INBOARD HOLE) (HFH, M10X1.5X46.5, 23.5, 19 OD, 10.9, SPECIAL)	99-02	F (LS1)	1	12561848
3.	3-A9	2.042	BOLT, STRTR (OUTBOARD HOLE) (OUTBOARD) (HFH, M10X1.5X113.5, 22.5, 15 OD, 10.9)	98	F (LS1)	1	12558858
	3-A9	2.042	BOLT, STRTR (OUTBOARD HOLE) (HFH, M10X1.5X113.5, 23.5 THD, 19.5 OD, 10.9, ZINC, MACH)	99-02	F (LS1)	1	12561367
4.		8.900	SCREW, HEX M10X1.5X16.9.8 PE (BAT NEG CBL)	98-02	F	1	11513783

cardiagn.com

5.		8.915	NUT-METRIC STYLE 2 HEX, M8X1.25 (BAT POS CBL)	98-02	F	1	11501085
6.	3-B3	2.342	CABLE, BAT POS (AC-DELCO #4SX53-2)	98-02	F (LS1)	1	12157131

RPO DEFINITIONS
LS1 -- ENGINE GAS, 8 CYL, 5.7L, SFI, ALUMINUM ENGINE

cardiagn.com

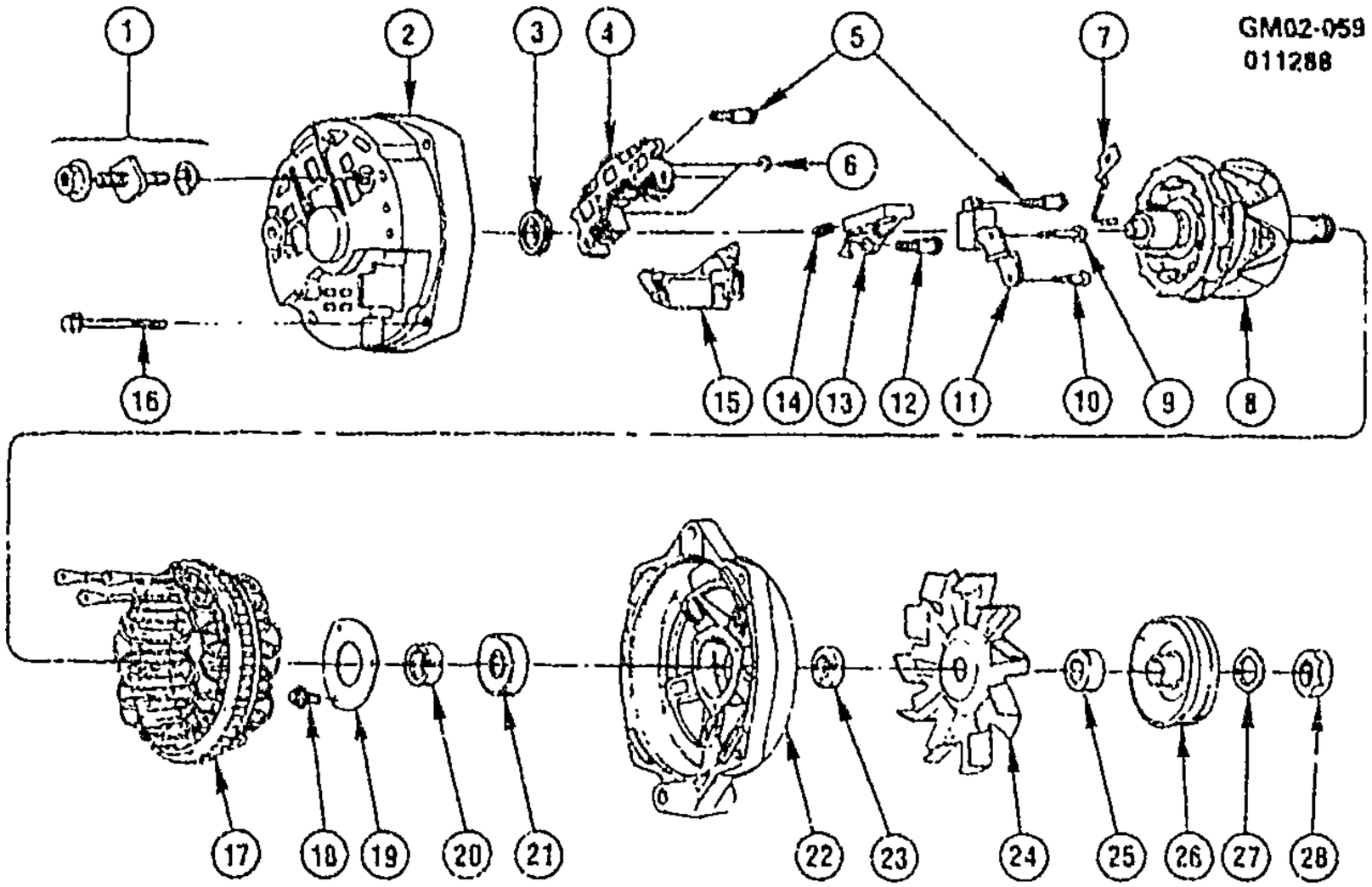

GM02–059F

1993–1995 F GENERATOR ASM (L32)(K68)
1996–2002 F GENERATOR ASM (L36/3.8K)(K68)

1.	N.S.	TERMINAL, BAT (PKG) (*KIT1)	
2.	N.S.	FRAME, S.R.E. (*KIT1)	
3.	N.S.	BALL, BEARING (*KIT1)	
4.	N.S.	RECTIFIER, BRIDGE POS (*KIT1)	
5.	N.S.	SCREW & WASHER, RECTIFIER BRDG ATTACH (*KIT1)	
6.	N.S.	NUT, RECTIFIER BRIDGE, HEX (8–32Z 284M) (*KIT1)	
7.	N.S.	CONNECTOR, STRAP (RECT TO REG) (*KIT1)	
8.	N.S.	ROTOR, (*KIT1)	
9.	N.S.	SCREW, CAPACITOR ATTACH (*KIT1)	
10.	N.S.	SCREW, REG ATTACH (*KIT1)	
11.	N.S.	CAPACITOR (*KIT1)	
12.	N.S.	SCREW, BRUSH HOLDER ATTACH (GROUND) (*KIT1)	
13.	N.S.	BRUSH HOLDER (*KIT1)	
14.	N.S.	SPRING, BRUSH (*KIT1)	
15.	N.S.	REGULATOR, GEN (*KIT1)	
16.	N.S.	BOLT, THRU (*KIT1)	
17.	N.S.	STATOR (*KIT1)	
18.	N.S.	SCREW, BRG RET PLT (*KIT1)	
19	N.S.	PLATE, BRG RET DR END (*KIT1)	

cardiagn.com

20.		N.S.	COLLAR, INSIDE, DRIVE END (*KIT1)				
21.		N.S.	BEARING, DR END (*KIT1)				
22.		N.S.	FRAME, DRIVE END (*KIT1)				
23.		N.S.	COLLAR, OUTSIDE, DR END (*KIT1)				
24.		N.S.	FAN, GEN (*KIT1)				
25.		N.S.	COLLAR, FAN & PULLEY (*KIT1)				
26.		N.S.	PULLEY, GEN (*KIT1)				
27.		N.S.	WASHER, GEN ARM SPG (DR END) (*KIT1)				
28.		N.S.	NUT, GEN ROT SHF DRV END (*KIT1)				

SERVICE KITS

1.		N.S.	GENERATOR, ((SERVICED BY REMAN))				
	3-A25	2.275	GENERATOR, (REMAN) (INCLS 1-28) (AC-DELCO #321-1086)	93-95	F (L32)	1	10463624
	3-A25	2.275	GENERATOR, (REMAN) (INCLS 1-28) (AC-DELCO #321-1423)	95-97	F (L36, K68)	1	10464075
	3-A25	2.275	GENERATOR, (REMAN) (INCLS 1-28) (AC-DELCO #321-1766)	98	F (L36, K68)	1	10464418
	3-A25	2.275	GENERATOR, (REMAN) (INCLS 1-28) (AC-DELCO #321-1753)	99	F (L36, K68)	1	10464409
	3-A25	2.275	GENERATOR, (REMAN) (INCLS 1-28) (AC-DELCO #321-1797)	00-02	F (L36, K68)	1	10464437

RPO DEFINITIONS
K68 - GENERATOR,105 AMPERE
L32 - ENGINE,3.4L,V6,(3.4S),SFI,OHV
L36 - ENGINE GAS, 6 CYL, 3.8K, MFI, V6 HO (ERV6 SERIES)

cardiagn.com

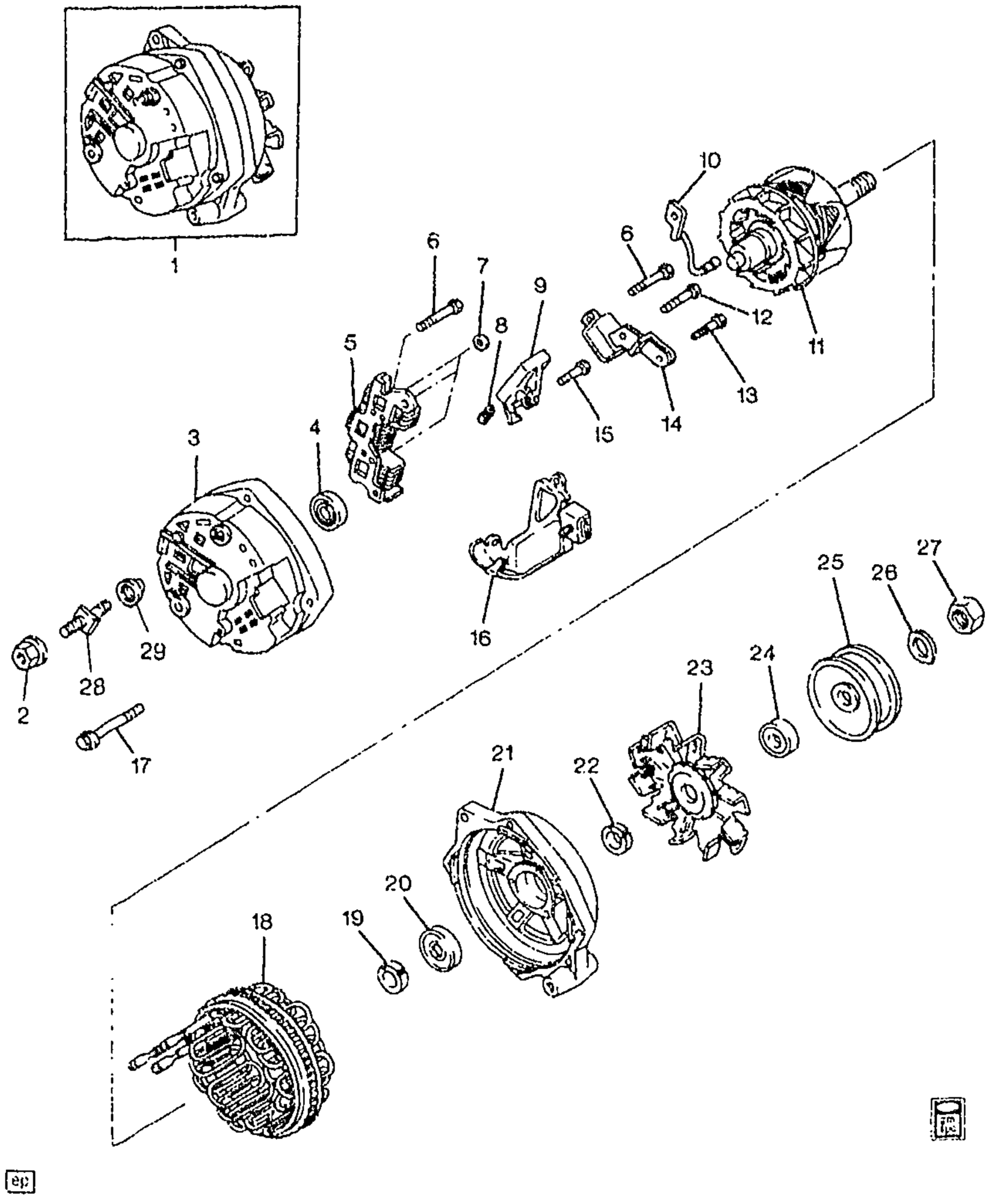

GM02-006F

1993-1997 F GENERATOR ASM (LT1/5.7P)

1.		N.S.	GENERATOR. (INCLS 2-29)		....		
	3-A25	2.275	GENERATOR. (REMAN) (INCLS 2-29) (AC-DELCO #321-1053)	93	F (LT1)	1	10463446
	3-A25	2.275	GENERATOR. (REMAN) (INCLS 2-29) (AC-DELCO #321-1113)	96-97	F (LT1)	1	10463680

cardiagn.com

	3–A25	2.275	GENERATOR, (REMAN) (ID BY P/N 10480111 STAMPED IN PART) (INCLS 2–29) (AC–DELCO #321–1113)	94	F (LT1) (2ND DES)	1	10463680
	3–A25	2.275	GENERATOR, (REMAN) (ID BY P/N 10480131 STAMPED IN PART) (INCLS 2–29) (AC–DELCO #321–1053)	94	F (LT1) (1ST DES)	1	10463446
	3–A25	2.275	GENERATOR, (REMAN) (ID BY P/N 10480203 STAMPED IN PART) (INCLS 2–29) (AC–DELCO #321–1113)	95	F (LT1)	1	10463680
2.	3–A28	2.313	NUT, GEN BAT TERM (PART OF 1) (*KIT1) (AC–DELCO #10474210)	93–95	F (LT1)	1	10474210
	3–A28	2.313	NUT, GEN BAT TERM (PART OF 1) (*KIT1) (AC–DELCO #10474210)	96–97	F (LT1, KG9)	1	10474210
3.	3–A27	2.297	FRAME, GEN SLIP RING END (PART OF 1) (AC–DELCO #1989706)	93	F (LT1)	1	1989706
	3–A27	2.297	FRAME, GEN SLIP RING END (PART OF 1) (AC–DELCO #10476416)	94–97	F (LT1)	1	10476416
4.	3–A27	2.298	BEARING, GEN ROT SHF SLIP RING END (PART OF 1) (AC–DELCO #10474532)	93	F (LT1)	1	10474532
	3–A27	2.298	BEARING, GEN ROT SHF SLIP RING END (PART OF 1) (INCLS BRG) (AC–DELCO #10476418) .	94–97	F (LT1)	1	10476418
5.	3–B2	2.319	BRIDGE, GEN RECTIFIER (PART OF 1) (AC–DELCO #D3990)	93	F (LT1)	1	10467052
	3–B2	2.319	BRIDGE, GEN RECTIFIER (PART OF 1) (AC–DELCO #10472095) .	94–97	F (LT1)	1	10472095
6.	3–B2	2.319	BOLT, GEN RECTIFIER BRIDGE (PART OF 1) (8–32 X 1.14") (AC–DELCO #1988971)	93–97	F	2	1988971
7.		8.915	NUT, HEX 8–32, ZINC 284M (GEN RECTIFIER BRIDGE) (PART OF 1) (*KIT1) (AC–DELCO #120622)	93–97	.....	3	120622
8.	3–A27	2.286	SPRING, GEN BRUSH (PART OF 1) (AC–DELCO #D786)	93–97	F (LT1)	2	10471998
9.	3–A27	2.291	BRUSH KIT, GEN (PART OF 1) (AC–DELCO #D775)	93–97	F (LT1)	1	1989702
	3–A25	2.277	SHIELD, GEN (PART OF 1) (2.291) (AC–DELCO #10470414)	94	F (LT1)	1	10470414
	3–A25	2.277	SHIELD, GEN (PART OF 1) (2.291) (AC–DELCO #10470414)	95–97	F (LT1, KG9)	1	10470414
10.	3–A28	2.313	CONNECTOR, GEN RECTIFIER BRIDGE (PART OF 1) (AC–DELCO #10497789)	93–97	F (LT1)	1	10497789
11.	3–A26	2.279	ROTOR, GEN (PART OF 1) (AC–DELCO #10476606) (W/PROD 10480131)	93	F (LT1)	1	10476606
	3–A26	2.279	ROTOR, GEN (PART OF 1) (AC–DELCO #10472724)	94–97	F (LT1)	1	10472724

cardiagn.com

12.	3–A27	2.291	**BOLT**, GEN BRUSH HLDR INSL (PART OF 1) (2.500) (AC–DELCO #1989699)	93–97	F (LT1)	1	1989699
13.	3–B2	2.319	**BOLT**, GEN RECTIFIER BRIDGE (PART OF 1) (8–32 X 1.24") (AC–DELCO #10474211)	93–97	F	1	10474211
14.	3–B2	2.319	**CAPACITOR**, GEN (PART OF 1) (AC–DELCO #1989703)	93–97	F (LT1)	1	1989703
15.	3–A27	2.291	**BOLT**, GEN BRUSH HLDR GND (PART OF 1) (M4.2X0.8X21.0, 500M) (AC–DELCO #1894586)	93–97	F (LT1)	1	1894586
16.	3–C4	2.500	**REGULATOR**, GEN VOLTAGE (PART OF 1) (AC–DELCO #D685)	93–97	F (LT1)	1	1116437
17.	3–A28	2.316	**BOLT**, GEN THRU (PART OF 1) (#10–24X2.6) (AC–DELCO #1989690)	93–97	F (LT1)	4	1989690
18.	3–A27	2.310	**STATOR**, GEN (PART OF 1) (AC–DELCO #10472882)	93	F (LT1)	1	10472882
	3–A27	2.310	**STATOR**, GEN (PART OF 1) (AC–DELCO #10470439)	94–97	F (LT1)	1	10470439
19.	3–A27	2.307	**COLLAR**, GEN ROT DRV END BRG I/S (PART OF 1) (AC–DELCO #10470412)	94–97	F (LT1)	1	10470412
	3–A27	2.307	**COLLAR**, GEN ROT DRV END BRG I/S (8.5MM THICK) (PART OF 1) (AC–DELCO #10470799)	93	F (LT1)	1	10470799
20.		N.S.	**BEARING**, GEN ROT DRV END (PART OF 1) (AC–DELCO #10471729)				
21.	3–A27	2.305	**FRAME**, GEN DRV END (PART OF 1) (AC–DELCO #D3463)	94–97	F (LT1)	1	10471339
	3–A27	2.305	**FRAME**, GEN DRV END (W/BRG) (PART OF 1) (AC–DELCO #D3462)	93	F (LT1)	1	10470800
22.	3–A27	2.307	**COLLAR**, GEN ROT DRV END BRG O/S (PART OF 1) (AC–DELCO #1985999)	93–97	F (LT1)	1	1985999
23.	3–A25	2.274	**FAN**, GEN (PART OF 1) (AC–DELCO #1978026)	93	F (LT1)	1	1978026
	3–A25	2.274	**FAN**, GEN (PART OF 1) (AC–DELCO #10471962)	94–97	F (LT1)	1	10471962
24.	3–A27	2.307	**COLLAR**, GEN ROT DR END FAN (PART OF 1) (AC–DELCO #1978064)	93–97	F (LT1)	1	1978064
25.	3–A25	2.274	**PULLEY**, GEN (PART OF 1) (AC–DELCO #1989104)	93–97	F (LT1)	1	1989104
26.	3–A26	2.280	**WASHER**, GEN ROT SHF DRV END (PART OF 1) (AC–DELCO #1941978)	93–97	F (LT1)	1	1941978
27.	3–A26	2.280	**NUT**, GEN ROT SHF DRV END (PART OF 1) (M12 THK, 23.8 O.D.)	93–97	F (LT1)	1	1911324
28.	3–A28	2.313	**TERMINAL**, GEN BAT (PART OF 1) (SKIT1) (AC–DELCO #10456476)	93	F (LT1)	1	10456476

cardiagn.com

	3-A28	2.313	TERMINAL, GEN BAT (PART OF 1) (*KIT1) (AC-DELCO #10474201)	94-97	F (LT1)	1	10474201
29.	3-A28	2.313	INSULATOR, GEN BAT TERM (PART OF 1) (*KIT1) (AC-DELCO #10470416)	93-94	F (LT1)	1	10470416
	3-A28	2.313	INSULATOR, GEN BAT TERM (PART OF 1) (*KIT1) (AC-DELCO #10470416) (ID BY #10480111 STAMPED ON GEN, NO COMP 2ND DES PART)	95	F (LT1) (1ST DES)	1	10470416
	3-A28	2.313	INSULATOR, GEN BAT TERM (PART OF 1) (*KIT1) (AC-DELCO #10470416)	96-97	F (LT1, KG9)	1	10470416

SERVICE KITS

1.	3-A28	2.313	TERMINAL KIT, GEN BAT (INCLS 2, 7, 28, 29) (AC-DELCO #1975471)	93-95	F (LT1)	1	1975471
	3-A28	2.313	TERMINAL KIT, GEN BAT (INCLS 2, 7, 28, 29) (AC-DELCO #1975471)	96-97	F (LT1, KG9)	1	1975471

RPO DEFINITIONS
KG9 - GENERATOR,140 AMPERE
LT1 - ENGINE-GAS, 8 CYL, 5.7L(5.7P),MFI,HO

cardiagn.com

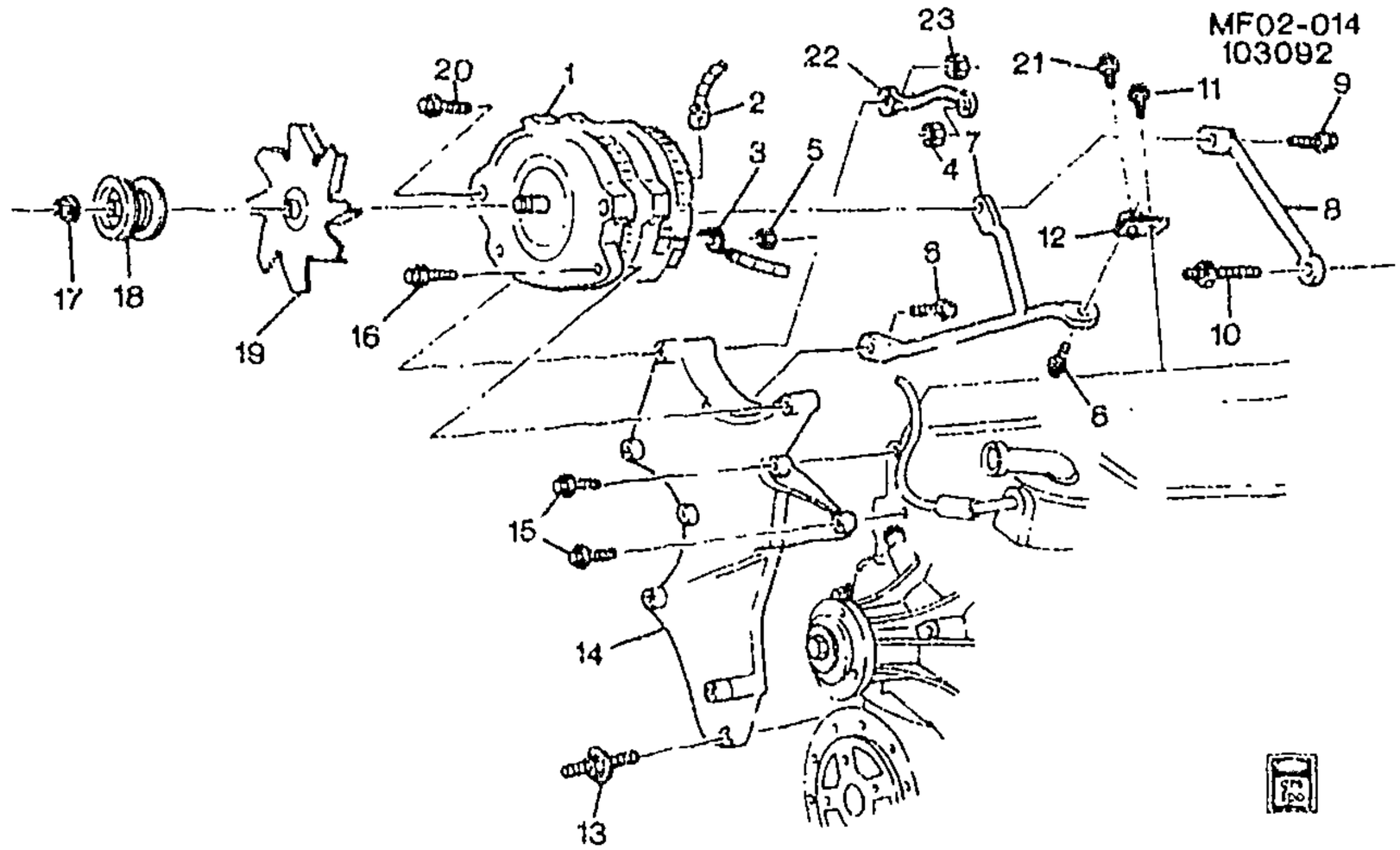

MF02-014

1993-1995 F GENERATOR MOUNTING (L32/3.4S)

1.	3-A25	2.275	GENERATOR, (REMAN) (INCLS 17, 18, 19) (AC-DELCO #321-1086)	93-95	F (L32)	1	10463624
2.	3-A28	2.313	CONNECTOR, GEN (4-WAY F) (W/LEADS) (2.535) (AC-DELCO #PT494)	93-95	F (L32)	1	12117361
3.		N.S.	TERMINAL, GEN BAT				
4.		8.917	NUT, HFH, M8X1.25, 17.9 OD, 738 THK, 13MM HEX, 10, ZF (EGR VLV PIPE) (8.915) (AC-DELCO #11514596)	93-95		1	11514596
5.		8.917	NUT, HFH 6X1X7 SELF LK 14.2-OD (9) 7111M ALL MET PREV TORQ (BAT POS CBL)	93-95		1	11516075
6.		8.900	BOLT, HFH M10X1.5X30 10.9 FL BLK 21.5 OD 26MM THD POINTED (GEN RR SUPT)	93-95		2	12337993
7.	3-A25	2.277	SUPPORT, GEN RR	93-95	F (L32)	1	10236218
8.	3-A25	2.277	BRACE, GEN RR	93-95	F (L32)	1	10166315
9.		8.900	BOLT, HWH, M8X1.25X40, SPL FULLTHD, AC PT, 10.9 PZOR (GEN RR SUPT)	93-95		1	11515758
10.	3-A25	2.277	STUD, GEN BR	93-95	F (L32)	1	10166379
11.	3-A25	2.277	BOLT, GEN BR (HEX M10X1.5X20 9.8 PZOR 22 OD 18MM THD (T/W 12345493 ADHES) (8.900)	93-95	F (L32)	1	11508202
12.	3-A25	2.277	SUPPORT, GEN RR	93-95	F (L32)	1	10244472
13.	3-A25	2.277	STUD, GEN & A/C CMPR BRKT	93-95	F (L32)	1	10166378
14.		DISCON	BRACKET, GEN & A/C CMPR	93-95	F (L32)	1	10115867
15.	3-A25	2.277	BOLT, GEN & A/C CMPR BRKT	93-95	F (L32)	2	10166386

cardiagn.com

16.		8.900	BOLT, M10X1.5X32, 28.'0 THD, 20.28 OD, 10.9, GM 7114M (GEN) (AC-DELCO #179-2006)	93-95	(L32)	1	15126460
17.	3-A26	2.280	NUT, GEN ROT SHF DRV END (PART OF 1) (M12 THK, 23.8 O.D.)	93-95	F (L32)	1	1911324
18.	3-A25	2.274	PULLEY, GEN (6 GRV) (PART OF 1) (AC-DELCO #1985964)	93-95	F (L32)	1	1985964
19.	3-A25	2.274	FAN, GEN (PART OF 1) (AC-DELCO #1989581)	93-95	F (L32)	1	1989581
20.		8.900	BOLT, HFH M10X1.5X130 9.8 PZOR (GEN BRKT)	93-95	F (L32)	1	11508469
21.	3-A25	2.277	BOLT, GEN SUPT BR	93-95	F (L32)	1	14097631
22.	3-N9	3.671	BRACE, EGR VLV ADAP	93-95	F (L32)	1	10239625
23.		8.915	NUT, HFH, 10X1.5 6H THD, 21.3 OD, 9.8 THK 13 HEX DR, GRD 9, ZF (EGR VLV ADAP BR) (8.917) .	93-95	... .	1	10255857

RPO DEFINITIONS
L32 - ENGINE,3.4L,V6,(3.4S),SFI,OHV

cardiagn.com

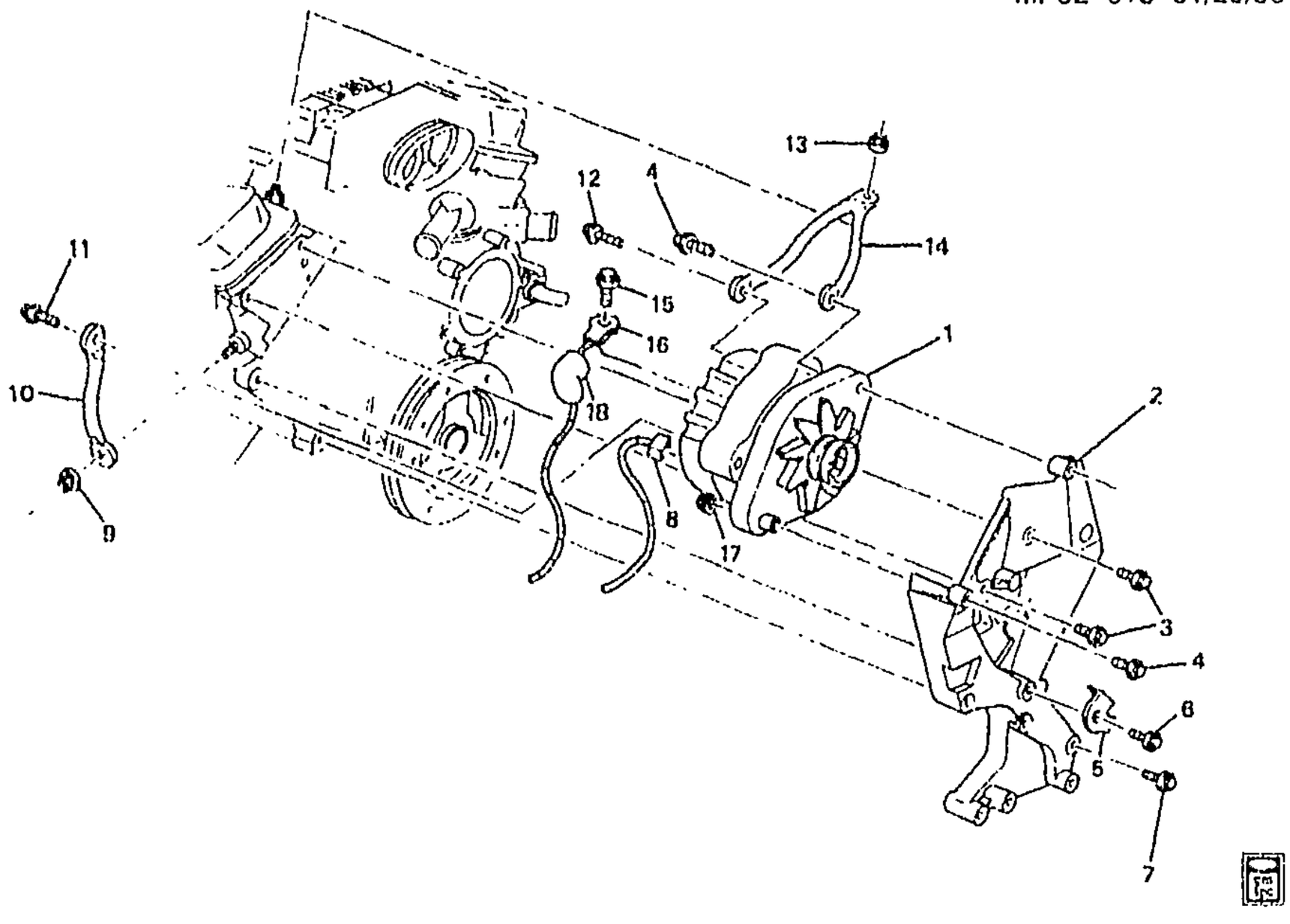

MF02-015

1993--1997 F GENERATOR MOUNTING (LT1/5.7P)

1.	3-A25	2.275	GENERATOR, (REMAN) (SEE "GENERATOR ASM" IN GRP 2.000 FOR DETAILED ILLUSTRATED VIEW) (AC-DELCO #321-1053)	93	F (LT1)	1	10463446
	3-A25	2.275	GENERATOR, (REMAN) (SEE "GENERATOR ASM" IN GRP 2.000 FOR DETAILED ILLUSTRATED VIEW) (AC-DELCO #321-1113)	96-97	F (LT1)	1	10463680
	3-A25	2.275	GENERATOR, (REMAN) (ID BY P/N 10480111 STAMPED IN PART) (SEE "GENERATOR ASM" IN GRP 2.000 FOR DETAILED ILLUSTRATED VIEW) (AC-DELCO #321-1113)	94	F (LT1) (2ND DES)	1	10463680
	3-A25	2.275	GENERATOR, (REMAN) (ID BY P/N 10480131 STAMPED IN PART) (SEE "GENERATOR ASM" IN GRP 2.000 FOR DETAILED ILLUSTRATED VIEW)	94	F (LT1) (1ST DES)	1	10463446

cardiagn.com

	3-A25	2.275	GENERATOR, (REMAN) (ID BY P/N 10480203 STAMPED IN PART) (SEE "GENERATOR ASM" IN GRP 2.000 FOR DETAILED ILLUSTRATED VIEW) (AC-DELCO #321-1113)	95	F (LT1)	1	10463680
2.	3-A25	2.277	BRACKET, GEN & A/C CMPR & P/S PUMP	93-97	F (LT1)	1	10239875
3.		8.900	BOLT, HFH 3/8-16X1.12 280M ZP FULL THD .75-OD (GEN BRKT)	93-97	F	2	9440071
4.		8.900	BOLT, HFH, M10X1.5X45, 25THD, 22.3OD, 10.9, 7114M, MACH RAISED SHOULDER (GEN)	93-97	F	2	11515769
5.	3-A18	2.251	SUPPORT, SPLG WIRE	93-97	F (LT1)	1	10223670
6.	3-A25	2.277	BOLT, GEN BRKT	93-97	F (LT1)	1	10206119
7.	3-A25	2.277	BOLT, GEN BRKT (3.655)	93-97	F	1	14084400
8.	3-A28	2.313	CONNECTOR, GEN (4-WAY F) (W/LEADS) (2.535) (AC-DELCO #PT494)	93-97	F (LT1)	1	12117361
9.		8.917	NUT, .375 16 HEX (GEN RR INR BR)	93-97	F	1	14057004
10.	3-A25	2.277	BRACE, GEN RR OTR	93	F (LT1)	1	10231654
	3-A25	2.277	BRACE, GEN RR OTR (122.75MM BETWEEN CENTERLINE OF MTG HOLES) ..	94	F (LT1) (2ND DES)	1	10229870
	3-A25	2.277	BRACE, GEN RR OTR (150.75MM BETWEEN CENTERLINE OF MTG HOLES) ..	94	F (LT1) (1ST DES)	1	10231654
	3-A25	2.277	BRACE, GEN RR OTR	95-97	F (LT1)	1	10229870
11.		8.900	BOLT, HFH, M8X1.25X20, 17THD, 18OD (GEN RR BR)	93-97	F	1	11515756
12.		8.900	BOLT, HFH M10X1.5X20 9.8 PZOR (GEN RR BR)	93-97	F	1	11508202
13.		8.917	NUT, .375 16 HEX (GEN RR OTR BR)	93-97	F	1	14057004
14.	3-A25	2.277	BRACE, GEN RR INR	93-97	F (LT1)	1	10223087
15.	3-B3	2.343	BOLT, BAT POS CBL RET	93	F (LT1)	1	12059484
	3-B3	2.343	NUT, BAT POS CBL (AT GEN OUTPUT STUD) (M8X1.25X7.8) (8.915)	94-97	F	1	11501085
16.		N.S.	TERMINAL, GEN BAT		.....		
17.		8.977	SCREW, HWH TAP M6.3X1.81X20 ZOR (THIS ITEM USED ON 1993 & 1994 MODELS ONLY)	93-94	.....	1	
18.	3-A28	2.313	COVER, GEN WIRE TERM (BLACK) (TERMINAL BOOT COVER) (2.343)	93	F (LT1)	1	12146809
	3-A28	2.313	COVER, GEN WIRE TERM (BLACK) (TERMINAL BOOT COVER)	94-97	F (LT1)	1	12146808

RPO DEFINITIONS
LT1 -- ENGINE -GAS, 8 CYL, 5.7L(5.7P),MFI,HO

cardiagn.com

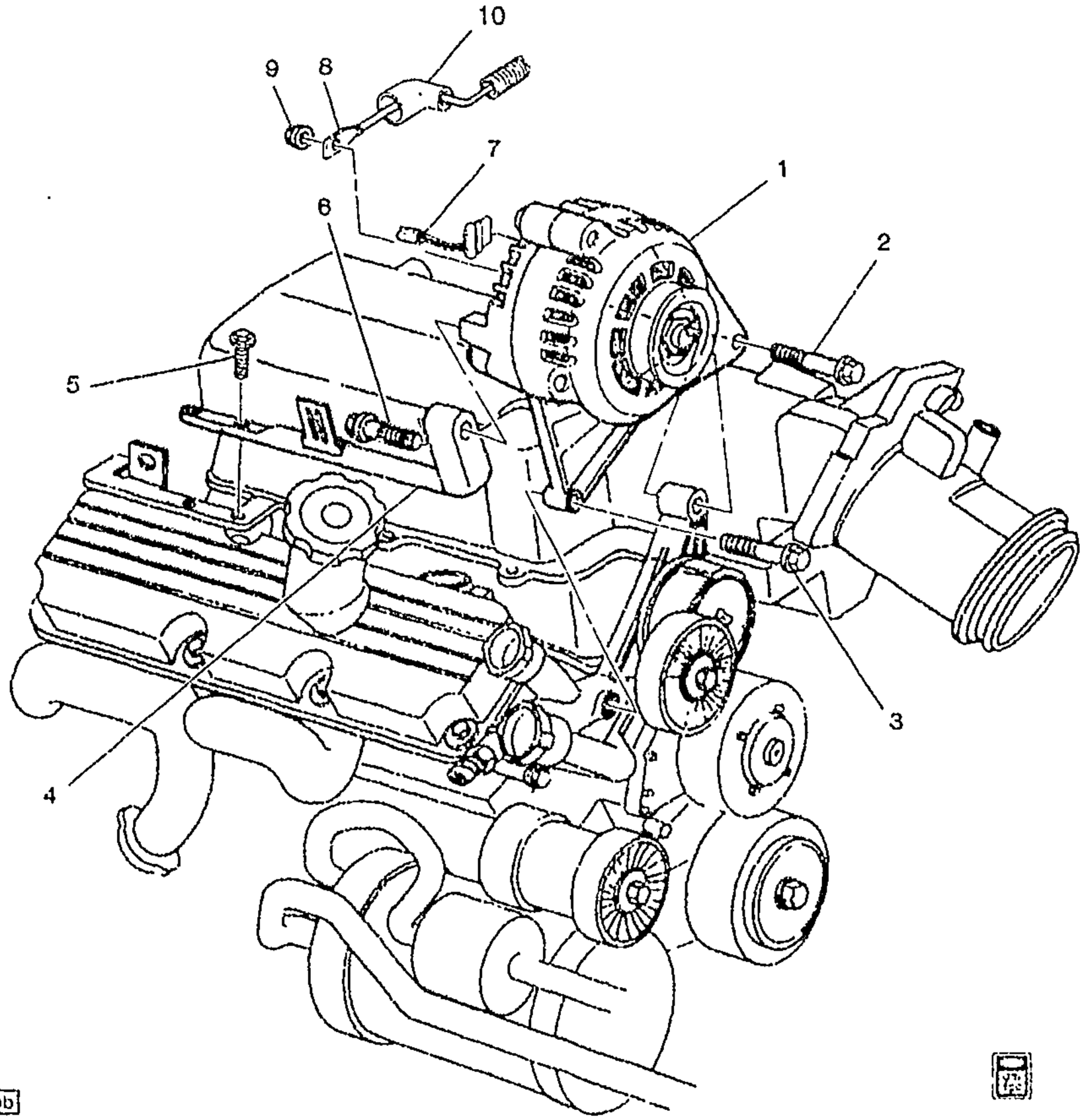

MF02--016

1995–2002 F GENERATOR MOUNTING (L36/3.8K)

1.	3–A25	2.275	GENERATOR, (REMAN) (AC–DELCO #321–1766)	98	F	1	10464418
	3–A25	2.275	GENERATOR, (REMAN) (AC–DELCO #321–1753)	99	F	1	10464409
	3–A25	2.275	GENERATOR, (REMAN) (AC–DELCO #321–1797)	00–02	F	1	10464437
	3–A25	2.275	GENERATOR, (REMAN) (AC–DELCO #321–1423)	95–97	F	1	10464075
2.		8.900	BOLT, HFH M8X1.25X75, 33.2 THD, 9.8 PO (GEN)	95–02	F	1	10130949
3.		8.900	BOLT, HFH M10X1.5X75 10.9PZOR (GEN)	95–02	F	1	11508540
4.	3–A25	2.277	BRACE, GEN RR	95–97	F (L36)	1	24503281
	3–A25	2.277	BRACE, GEN RR	98	F (L36)	1	24506452
	3–A25	2.277	BRACE, GEN RR	99–02	F (L36)	1	24507628

cardiagn.com

5.		8.900	**BOLT**, HEX, M8X1.25X16, 15 THD, 18 OD, 10.9, MAT, 7114M, FIN, MACH (GEN BR BRKT)	95–02		2	11515755
6.		8.900	**BOLT**, **M8X1.25X40**, 18 OD, 22 THD, 9.8 (GEN BR)	95–02	F	1	11516339
7.	3–A28	2.313	**CONNECTOR**, GEN (4–WAY F) (W/LEADS) (2.535) (AC–DELCO #PT147)	95–98	F (L36)	AR	12085537
	3–A28	2.313	**CONNECTOR**, GEN (RR) (4–WAY F, W/LEADS) (2.530) (AC–DELCO #PT1136)	99–02	F	1	15306009
8.		8.965	**TERMINAL**, FEMALE, M/P 150 SERIES, PUSH TOSEAT, 16–20 GA. (GEN BAT)	95–02	F	AR	12048074
9.		8.915	**NUT–METRIC STYLE 2** HEX, M8X1.25 (NUT, BATT CBL)	95–02	F	1	11501085
10.	3–A28	2.313	**COVER**, GEN WIRE TERM (BLACK) (TERMINAL BOOT COVER) (2.343)	95	F (L36)	1	12146809
	3–A28	2.313	**COVER**, GEN WIRE TERM (BLACK) (TERMINAL BOOT COVER)	96–97	F (L36)	1	12146808
	3–A28	2.313	**COVER**, GEN WIRE TERM (BLACK) (TERMINAL BOOT COVER) (2.343)	98–02	F (L36)	1	12146809

RPO DEFINITIONS

L36 – ENGINE GAS, 6 CYL, 3.8K, MFI, V6, HO (ERV6 SERIES)

cardiagn.com

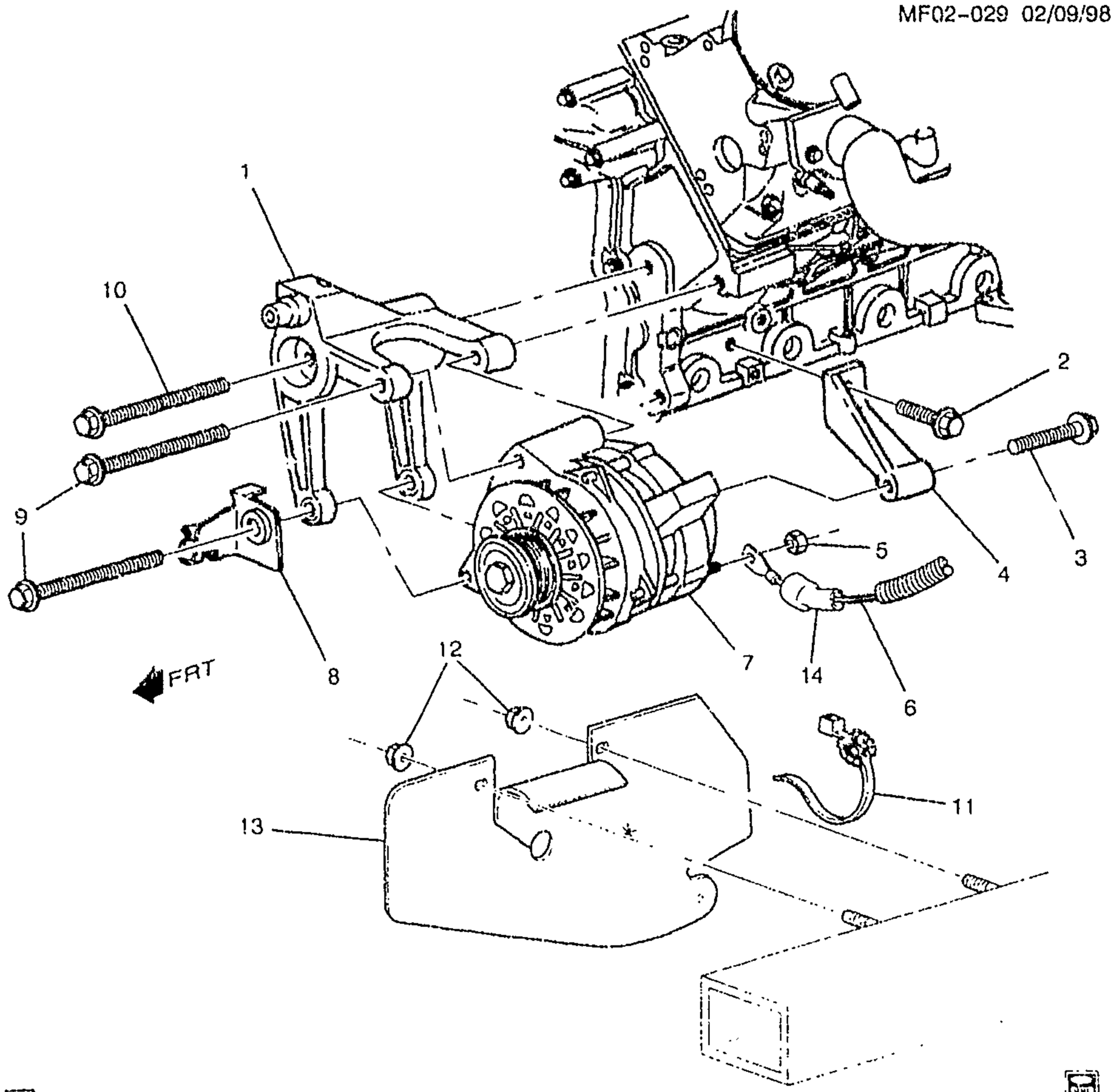

MF02-029

1998-2002 F GENERATOR MOUNTING (LS1/5.7G)

1.	3-A25	2.277	BRACKET, GEN	98-02	F (LS1)	1	12563327
2.		8.900	BOLT, HFH, M10X1.5X35, 32THD, 22.3 OD, 10.9, 7114M MACH (GEN RR BRKT)	98-02	F	1	11515767
3.		8.900	BOLT, HFH, 8X1.25X50, 27THD, 17.6OD, 9.3PEOR (GEN RR BRKT)	98-02	F	1	11509666
4.	3-A25	2.277	BRACKET, GEN RR	98-02	F (LS1)	1	12556915
5.		8.915	NUT-METRIC STYLE 2 HEX, M8X1 25 (BAT POS CBL)	98-02	F	1	11501085

cardiagn.com

6.	3-B3	2.342	CABLE, BAT POS (AC-DELCO #4SX53-2)	98-02	F (LS1)	1	12157131
7.		N.S.	GENERATOR, (REMAN) (AC-DELCO #321-1746)	98	F		
		N.S.	GENERATOR, (REMAN) (AC-DELCO #321-1751)	99-02	F		
8.	3-N11	4.128	BRACKET, TRANS FLUID CLR PIPE	98-02	F (LS1, M30)	LH	10402187
9.		8.900	BOLT-HFM, M10X1.5X125, 25TH, 22.3 OD, 500M (9.8), 7114M, MACH, P PT (GEN)	98-02		AR	11516513
10.		8.900	BOLT, HFH M10X1.5X90 22.3-OD, DIM A-30 9.8 POR (GEN BRKT)	98-02	F	1	11516360
11.	3-A25	2.277	STRAP, GEN SPH SHLD	98-02	F (LS1)	1	10402849
12.	3-A25	2.277	NUT, GEN SPH SHLD	98-02	F (LS1)	2	10402850
13.	3-A25	2.277	SHIELD, GEN SPH	98-02	F (LS1)	1	10402846
14.	3-A28	2.313	COVER, GEN WIRE TERM (BLACK) (TERMINAL BOOT COVER) (2 343)	98-02	F (LS1)	1	12146809

RPO DEFINITIONS
LS1 – ENGINE GAS, 8 CYL, 5.7L, SFI, ALUMINUM ENGINE
M30 -- TRANSMISSION,AUTOMATIC 4 SPEED,4L60E,ELECTRONIC

cardiagn.com

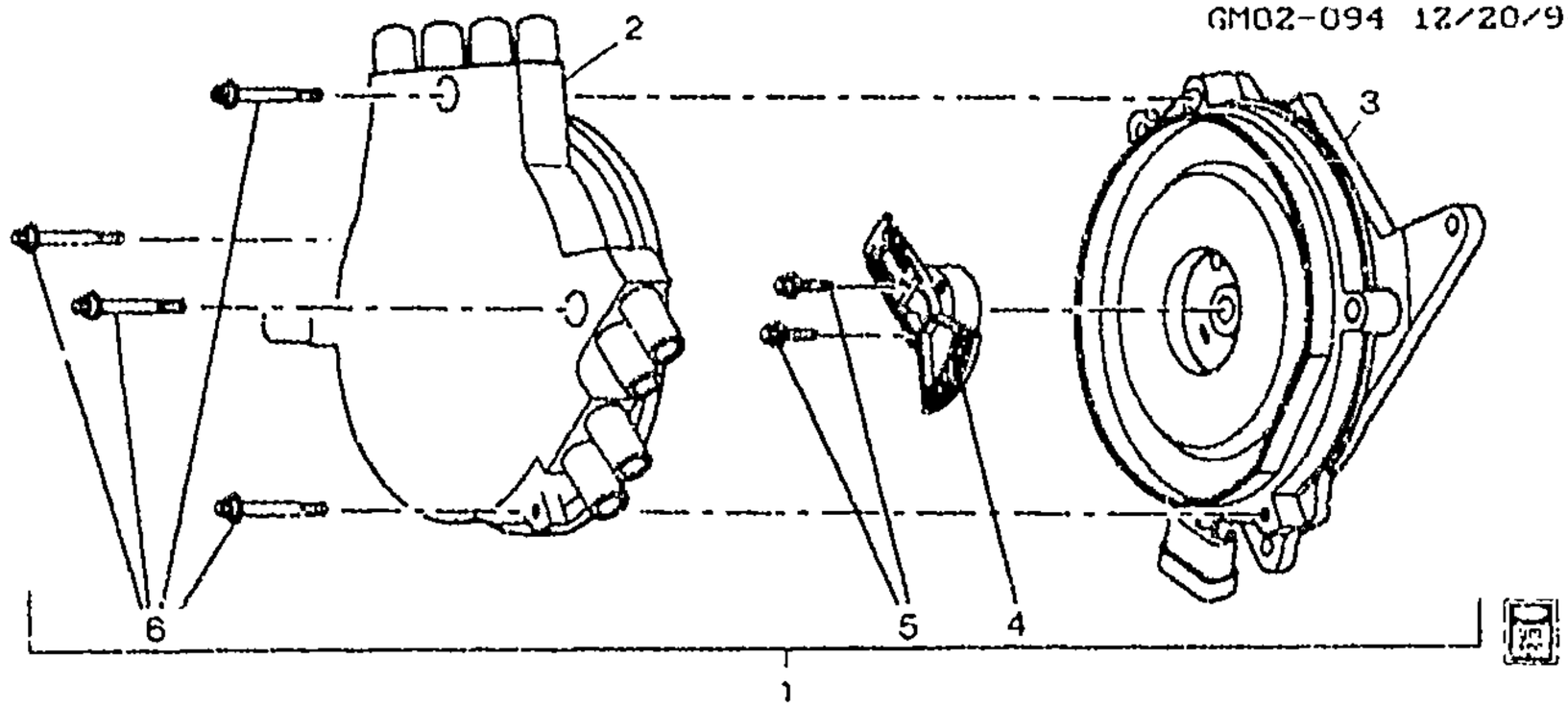

GM02-094F

1993-1994 F DISTRIBUTOR/IGNITION (LT1)

1.	3-B4	2.361	DISTRIBUTOR, (INCL'S #2-6) (AC-DELCO #10457702)	93-94 F (LT1)	1 10457702
2.		N.S.	CAP, DISTR (PART OF 1)	.....	
3.		N.S.	HOUSING, DISTR (PART OF 1) ..	.....	
4.		N.S.	ROTOR, DISTR (PART OF 1)	.....	
5.		N.S.	BOLT, DISTR ROT (PART OF 1) ..	.....	
6.		N.S.	BOLT, DISTR CAP (PART OF 1) ..	.....	

RPO DEFINITIONS

LT1 - ENGINE-GAS, 8 CYL, 5.7L(5.7P),MFI,HO

cardiagn.com

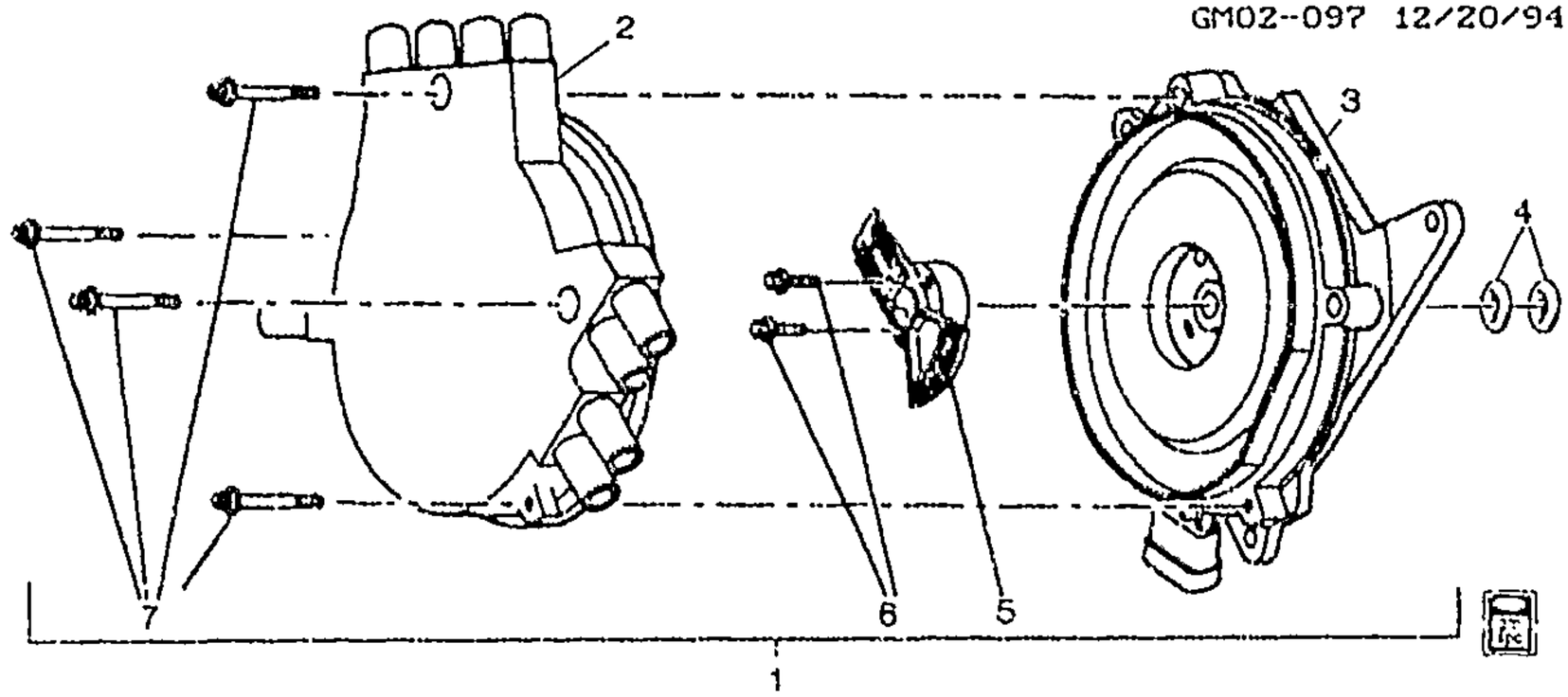

GM02-097F

1995-1997 F DISTRIBUTOR/IGNITION (LT1)

1.	3-B4	2.361	DISTRIBUTOR, (INCLS 2-7) (W/PUMP GSKT SHOULD BE ORDERED ALSO) (AC-DELCO #1104032)	95-97	F (LT1)	1	1104032
2.	3-B4	2.367	CAP KIT, DISTR (W/ROT) (INCL CVR & O-RING) (INLCS 2, 5, 6) (AC-DELCO #D8301)	95-97	F (LT1)	1	10457293
3.		N.S.	HOUSING, DISTR (PART OF 1)				
4.	3-B4	2.363	SEAL, DISTR HSG OIL (O RING) (ALSO PART OF 1) (2.372) (AC-DELCO #10474278)	95-97	F (LT1)	1	10474278
5.		N.S.	ROTOR, DISTR (PART OF 1 & 2)				
6.		N.S.	BOLT, DISTR ROT (PART OF 1 & 2)				
7.		N.S.	BOLT, DISTR CAP (PART OF 1)				

RPO DEFINITIONS
LT1 - ENGINE-GAS, 8 CYL, 5.7L(5 7P),MFI,HO

cardiagn.com

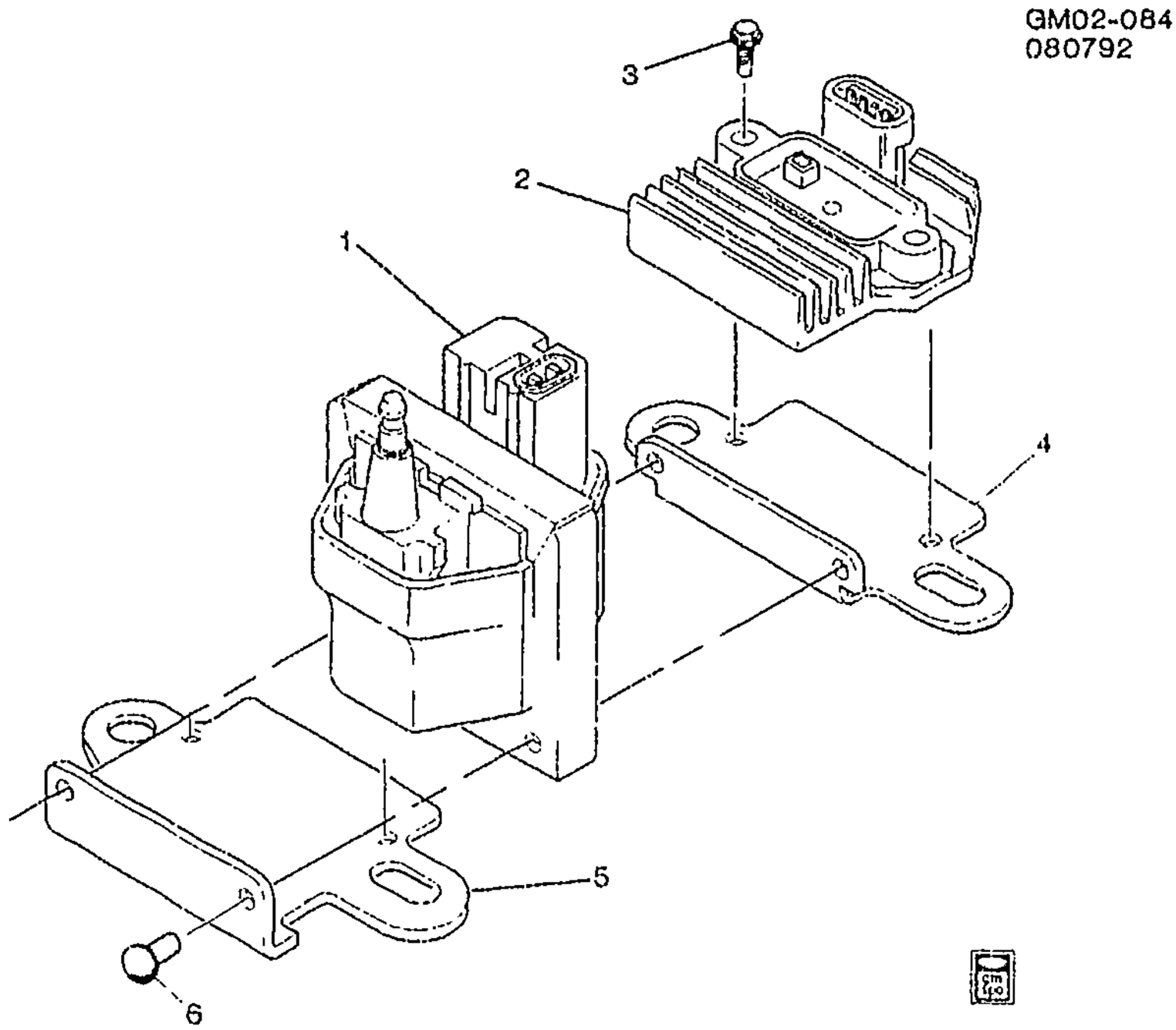

GM02-084

1993 F COIL & MODULE/IGNITION (LT1/5.7P)

1.	3-A12	2.170	COIL, IGN (AC-DELCO #D535)	93 F (LT1)	1	1115315
2.	3-B4	2.383	MODULE, ELEK IGN CONT (W/O COIL) (AC-DELCO #D1971A)	93 F (LT1)	1	10483131
3.	3-A12	2.183	BOLT, IGN COIL (AC-DELCO #10474609)	93 F (LT1)	2	10474609
4.	3-A12	2.183	BRACKET, IGN COIL (AC-DELCO #10471206)	93 F (LT1)	1	10471206
5.	3-A12	2.183	BRACKET KIT, IGN COIL (AC-DELCO #10471138)	93 F (LT1)	1	10471138
6.		N.S.	RIVET, BRKT ATCH (SERV. BY BOLT 11507041 & NUT 10180301)			
		8.900	BOLT - HWH M4X0.7X30 9.8 PC (BRKT ATCH TO COIL)	93	2	11507041
		8.915	NUT, M4X0.7 6H (IGN COIL BRKT)	93	2	10180301

RPO DEFINITIONS
LT1 -- ENGINE-GAS, 8 CYL, 5.7L(5.7P),MFI,HO

cardiagn.com

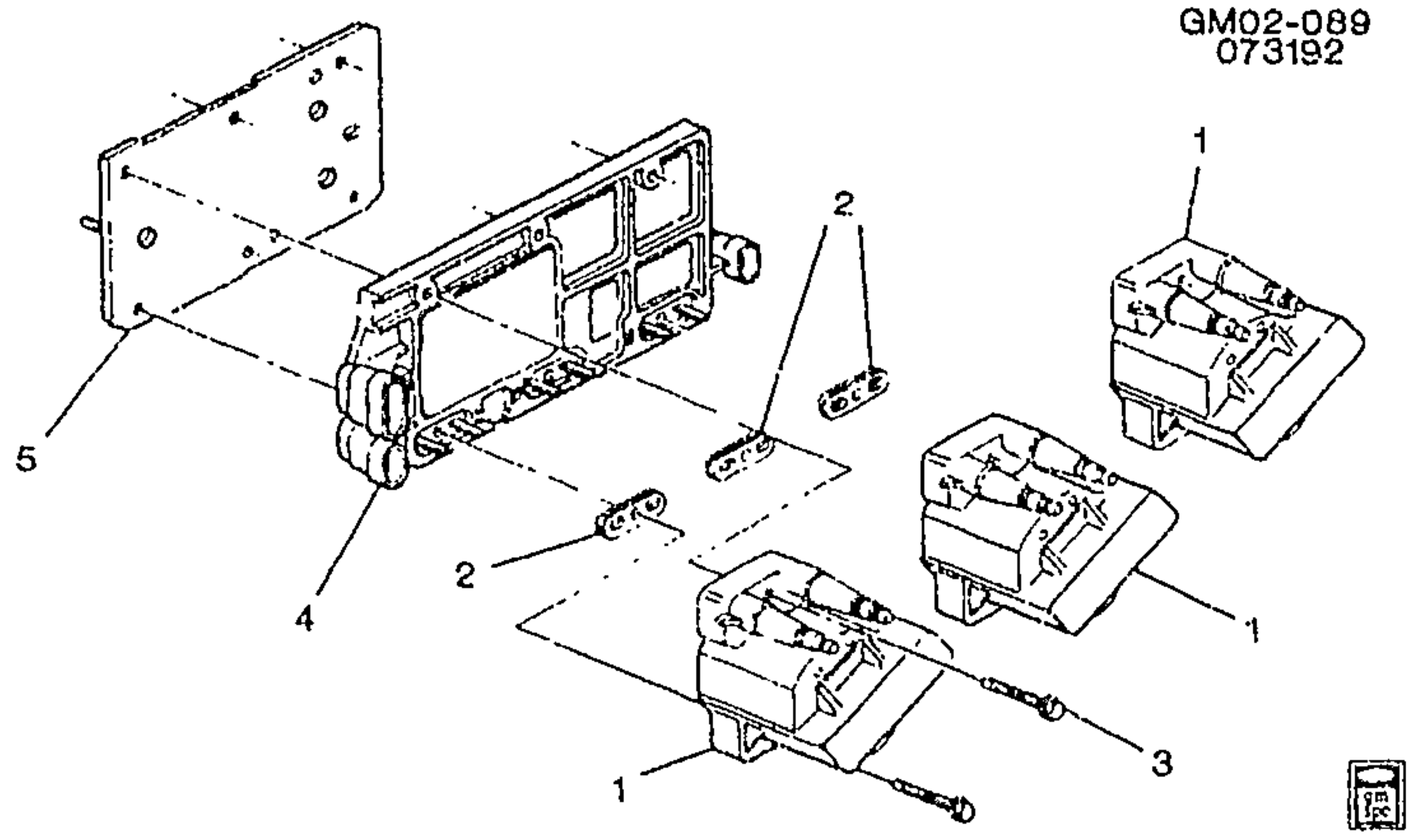

1993- 1995 F COIL & MODULE/IGNITION (L32/3.4S)

1.	3-A12	2.170	COIL, IGN (AC-DELCO #D555) .	93-95	F (L32)	3	10472401
2.	3-A12	2.183	SEAL, IGN COIL (ELEC MDL) (TYPE II, DELCO REMY, 2 TERMS) (AC-DELCO #1989579)	93-95	F (L32)	3	1989579
3.	3-A12	2.183	BOLT, IGN COIL (AC-DELCO #10467438)	93-95	F (L32)	6	10467438
4.	3-B4	2.383	MODULE, ELEK IGN CONT (W/O COIL) (ON ENGINE) (INCLS SEALS) (AC-DELCO #D1998A) .	93-95	F (L32)	1	10489422
5.	3-B4	2.383	BRACKET, ELEK ICM (AC-DELCO #10467192)	93-95	F (L32)	1	10467192

RPO DEFINITIONS
L32 - ENGINE,3.4L,V6,(3.4S),SFI,OHV

cardiagn.com

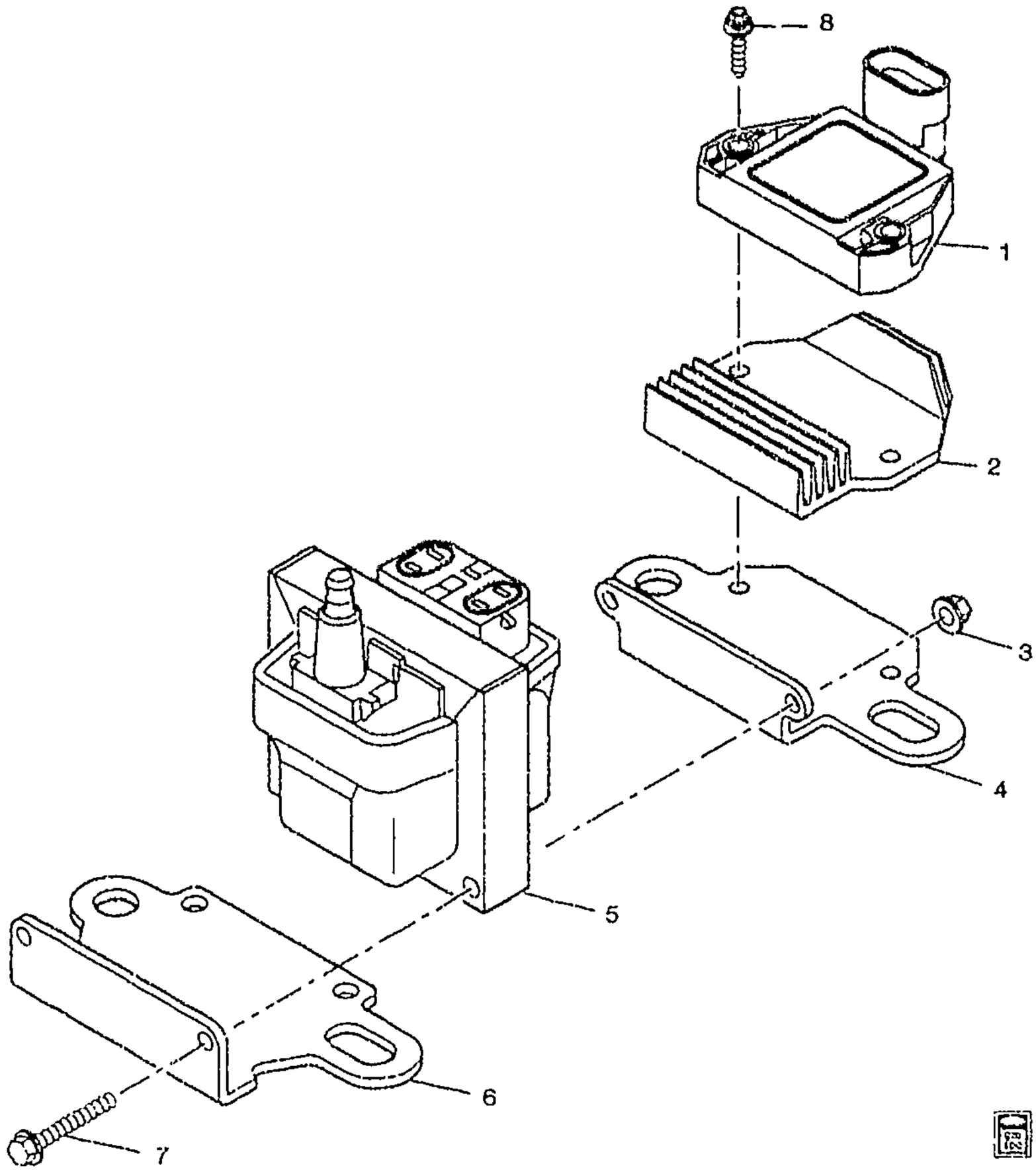

GM02-092F

1994-1995 F COIL & MODULE/IGNITION (LT1/5.7P)

1.	3-B4	2.383	MODULE, ELEK IGN CONT (W/O COIL) (AC-DELCO #D1986A) . . .	94-95	F (LT1)	1	10483139
2.	3-B4	2.383	HEAT SINK, ELEK ICM (AC-DELCO #10474610)	94-95	F (LT1)	1	10474610
3.		8.915	NUT, M4X0 7 6H (IGN COIL BRKT)	94-95	F	1	10180301
4.	3-A12	2.183	BRACKET, IGN COIL (AC-DELCO #10471206)	94-95	F	1	10471206
5.	3-A12	2.170	COIL, IGN (AC-DELCO #D573) .	94-95	F (LT1)	1	10477208
6.	3-A12	2.183	BRACKET KIT, IGN COIL	94-95	F	1	10477207

cardiagn.com

7.		3.900	BOLT– HWH M4X0.7X30 9.8 PC (ATTACHING TO COIL)	94–95	F	2	11507041
8.	3–A12	2.183	BOLT, IGN COIL (AC–DELCO #10474609)	94–95	F (LT1)	2	10474609

RPO DEFINITIONS
LT1 – ENGINE–GAS, 8 CYL, 5.7L(5.7P),MFI,HO

cardiagn.com

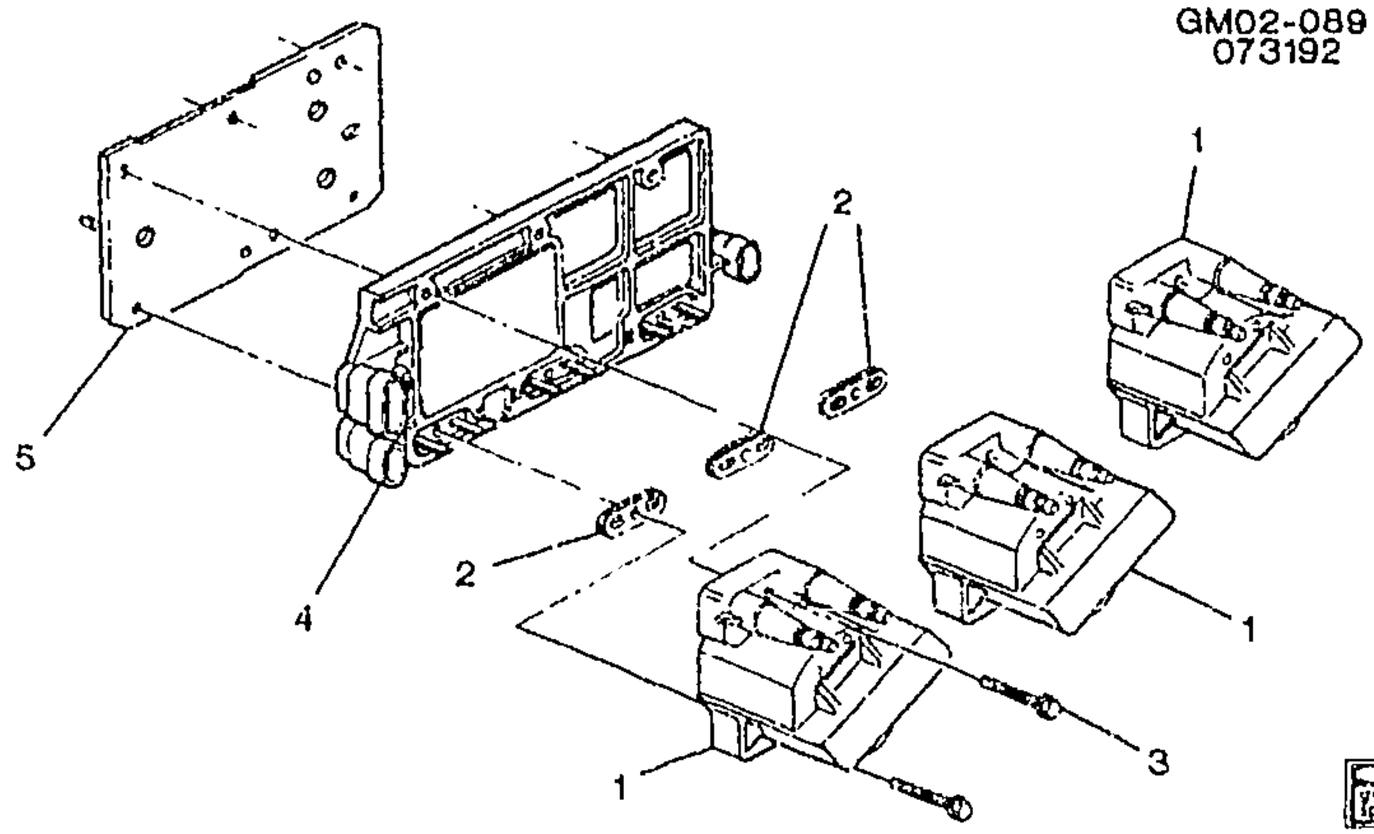

1995–2002 F COIL & MODULE/IGNITION (L36/3.8K)

1.	3–A12	2.170	COIL, IGN (AC–DELCO #D555) .	95–02	F (L36)	3	10472401
2.	3–A12	2.183	SEAL, IGN COIL (ELEC MDL) (TYPE II, DELCO REMY, 2 TERMS) (AC–DELCO #1989579)	95–02	F (L36)	3	1989579
3.	3–A12	2.183	BOLT, IGN COIL (AC–DELCO #10467438)	95–02	F (L36)	6	10467438
4.	3–B4	2.383	MODULE, ELEK IGN CONT (W/O COIL) (AC–DELCO #D1977A) ...	95–02	F (L36)	1	10494012
5.	3–B4	2.383	BRACKET, ELEK ICM (AC–DELCO #10477437)	95–02	F (L36)	1	10477437

RPO DEFINITIONS
L36 – ENGINE GAS, 6 CYL, 3.8K, MFI, V6, HO (ERV6 SERIES)

cardiagn.com

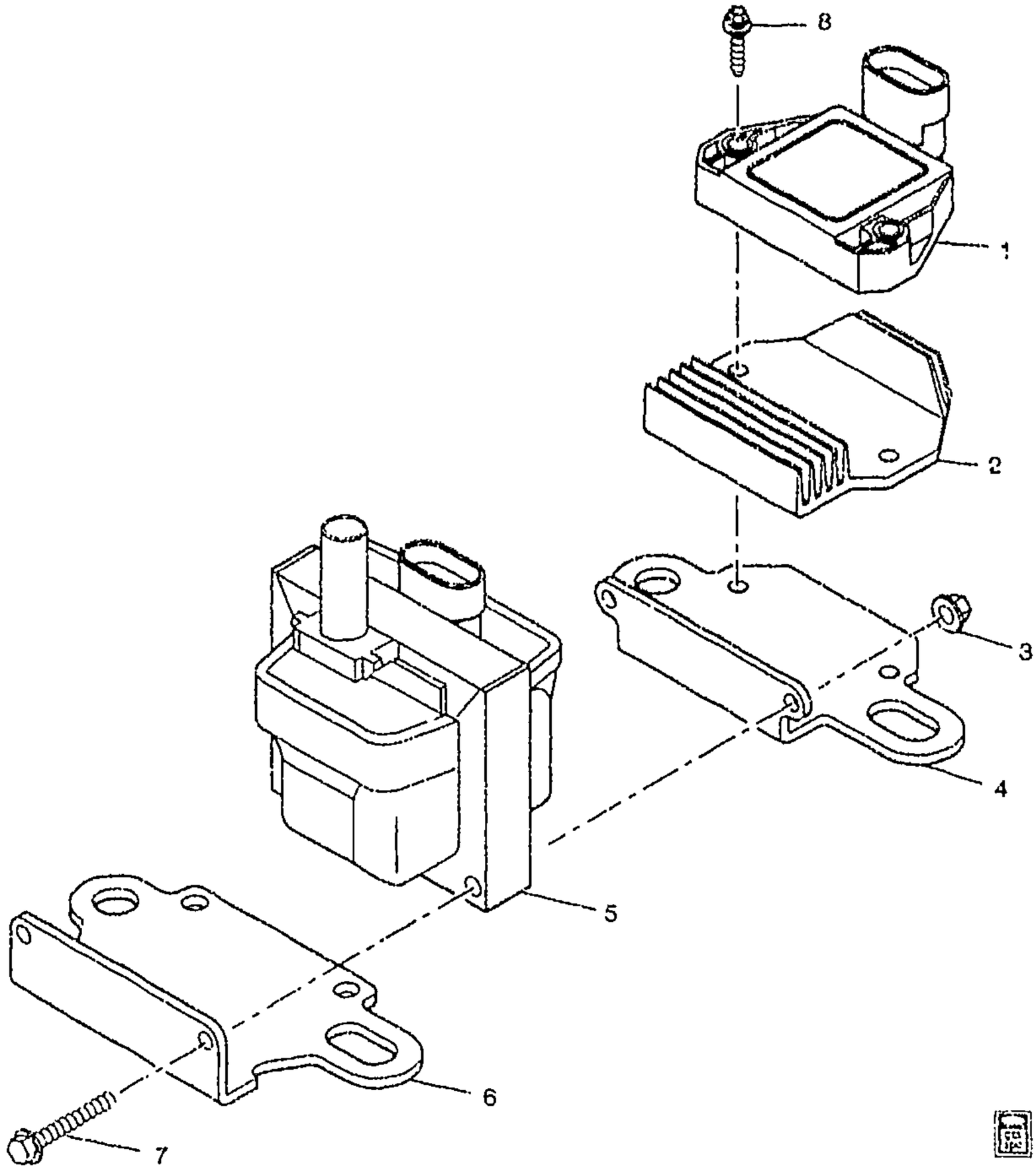

GM02-102F

1996-1997 F COIL & MODULE/IGNITION (LT1/5.7P)

1.	3-B4	2.383	MODULE, ELEK IGN CONT (W/O COIL) (AC-DELCO #D579)	96-97	F (LT1)	1	10482803
2.	3-B4	2.383	HEAT SINK, ELEK ICM (AC-DELCO #10474610)	96-97	F (LT1)	1	10474610
3.		8.915	NUT, M4X0.7 6H (IGN COIL BRKT)	96-97	F	1	10180301
4.	3-A12	2.183	BRACKET, IGN COIL (AC-DELCO #10471206)	96-97	F	1	10471206
5.	3-A12	2.170	COIL, IGN (AC-DELCO #D577)	96-97	F (LT1)	1	10489421
6.	3-A12	2.183	BRACKET KIT, IGN COIL (AC-DELCO #10471138)	96-97	F (LT1)	1	10471138

cardiagn.com

7.		8.900	BOLT– HWH M4X0.7X30 9.8 PC (ATTACHING TO COIL)	96–97	F	2	11507041
8.	3–A12	2.183	BOLT, IGN COIL (AC–DELCO #10474609)	96–97	F (LT1)	2	10474609

RPO DEFINITIONS

LT1 – ENGINE–GAS, 8 CYL, 5.7L(5.7P),MFI,HO

cardiagn.com

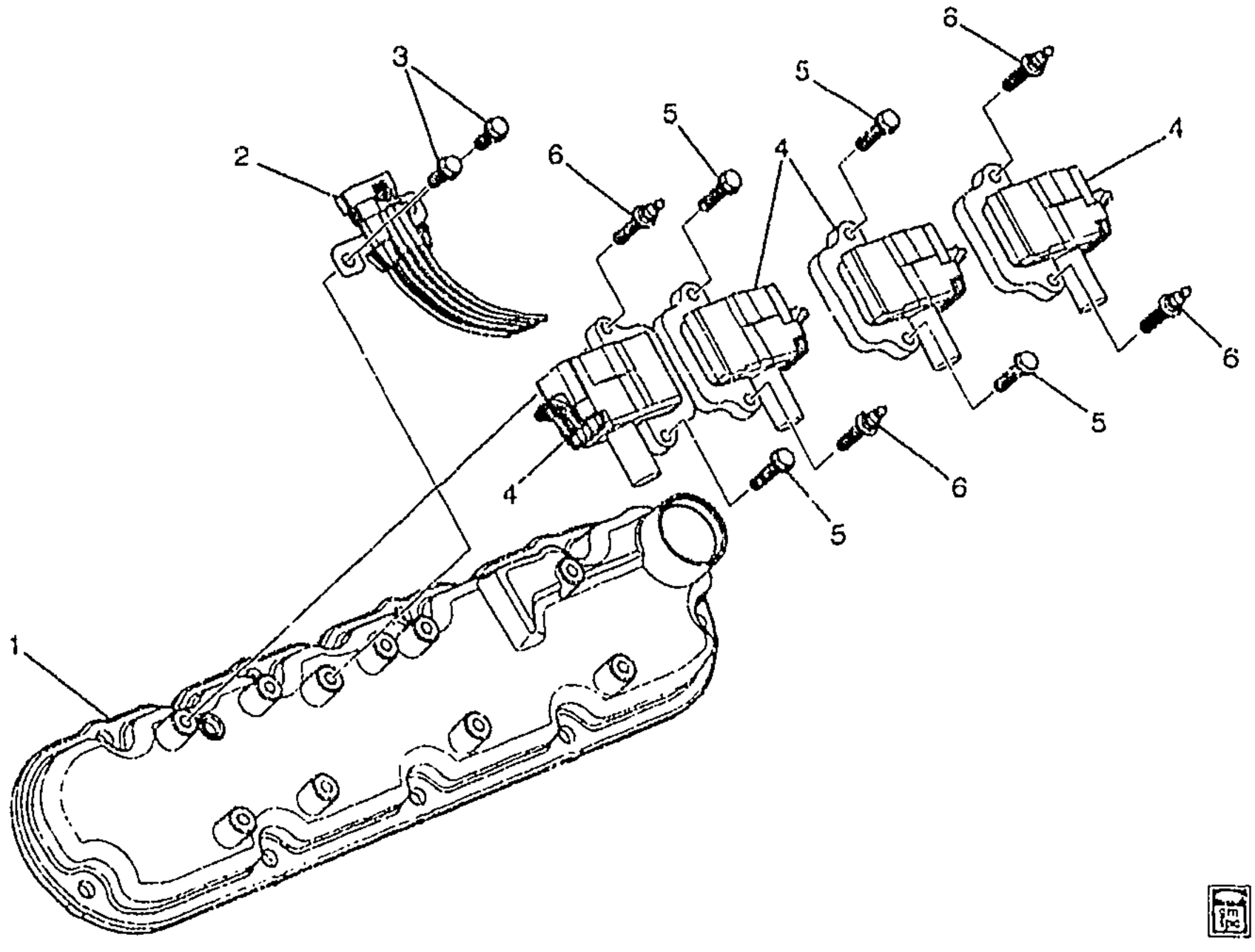

GM02-107

1998 F COIL ASM/DIRECT IGNITION (LS1/5.7G)

1.	3-M26	0.386	COVER, VLV RKR ARM (INCLS ATTACH BOLTS)	98	F (LS1)	RH	12559603
	3-M26	0.386	COVER, VLV RKR ARM (INCLS ATTACH BOLTS)	98	F (LS1)	LH	12559604
2.	3-A16	2.240	WIRE, IGN COIL (LH & RH BANKS) (PRIMARY)	98	F (LS1)	2	15301401
3.		8.900	BOLT/SCREW, HFH, M6X1X10, 9.8, PZOR, 7114M, 14.2, FLG OD (WRG HARN BRKT)	98		4	11516421
4.	3-A12	2.170	COIL, IGN (AC-DELCO #D580)	98	F (LS1)	8	12558948
5.		3.917	BOLT, M6X1X20, 9.8, PZOR, 7114M, 14.2 FLG OD (IGN COIL) (8.900) (AC-DELCO #11516423)	98		AR	11516423
6.	3-A12	2.183	STUD, IGN COIL (4-RH, 5-LH) (HFH, M6X1.0X40, SPECIAL HD)	98	F (LS1)	9	12557539

RPO DEFINITIONS
LS1 -- ENGINE GAS, 8 CYL, 5.7L, SFI, ALUMINUM ENGINE

cardiagn.com

ILLUSTRATION INTENTIONALLY LEFT BLANK

OTOU--050

1993–1997 F NORMAL MAINTENANCE REPLACEMENT PARTS (LT1/5.7P)

NOTE: PLEASE REFER TO YOUR OWNER MANUAL FOR (NORMAL)SCHEDULED MAINTENANCE PARTS

1.	3–A20	2.270	SPARK PLUG, (41–906) (AC–DELCO #41–906)	93–95	F (LT1)	8	5614244
	3–A20	2.270	SPARK PLUG, (41–943) (AC–DELCO #41–943)	96–97	F (LT1)	8	25166821
2.	3–N2	3.410	ELEMENT, A/CL (AC–DELCO #A1163C)	93–97	F (LT1)	1	25098463
3.	3–M28	1.836	FILTER, OIL (AC–DELCO #PF25)	93–97	F (LT1)	1	6438261
	3–M28	1.836	FILTER, OIL (AC–DELCO #UPF25)	93–97	F (LT1)	1	25322833
	3–M28	1.836	FILTER, OIL (AC–DELCO #SPF25)	93–97	F (LT1)	1	25325405
4.	3–A16	2.239	WIRE KIT, SPLG (INCL RH & LH SPLG WRG HARN & IGN COIL WRG HARN) (AC–DELCO #718B)	93	F (LT1)	1	12096417
	3–A16	2.239	WIRE KIT, SPLG (INCL RH & LH SPLG WRG HARN & IGN COIL WRG HARN) (AC–DELCO #718G)	94–95	F (LT1)	1	12096439
	3–A16	2.239	WIRE KIT, SPLG (AC–DELCO #748E)	96–97	F (LT1)	1	12173592

cardiagn.com

5.	3–N10	3.890	FILTER, FUEL (AC–DELCO #GF627)	93–97	F	1	25121942
8.	3–N12	4.197	FILTER KIT, A/TRNS FLUID (USED W/SHALLOW PAN) (AC–DELCO #24200796)	94–97	F (M30)	1	24200796
	3–N12	4.197	FILTER KIT, A/TRNS FLUID (W/SEAL & GSKT) (AC–DELCO #8657926)	93	F (MD8)	1	8657926
9.	3–N12	4.196	GASKET, A/TRNS FLUID PAN (AC–DELCO #8654799)	93	F (MD8)	1	8654799
	3–N12	4.196	GASKET, A/TRNS FLUID PAN (AC–DELCO #8654799)	94–97	F (M30)	1	8654799
10.	3–M27	1.745	VALVE, PCV (CV895C, 1 VACUUM PORT) (AC–DELCO #CV895C)	93–97	F (LT1)	1	25095452

RPO DEFINITIONS
LT1 – ENGINE–GAS, 8 CYL, 5.7L(5.7P),MFI,HO
MD8 – TRANSMISSION,AUTOMATIC 4–SPEED(THM700R4/4L60)
M30 – TRANSMISSION,AUTOMATIC 4 SPEED,4L60E,ELECTRONIC

cardiagn.com

ILLUSTRATION INTENTIONALLY LEFT BLANK

OTOU-007

1997-2002 F NORMAL MAINTENANCE REPLACEMENT PARTS (L36/3.8K)

NOTE: PLEASE REFER TO YOUR OWNER MANUAL FOR (NORMAL)SCHEDULED MAINTENANCE PARTS

1.	3-A20	2.270	SPARK PLUG, (AC-DELCO #41-921)	97-02	F (L36)	6	25161444
	3-A20	2.270	SPARK PLUG, (AC-DELCO #14)	97-02	F (L36)	AR	25332828
	3-A20	2.270	SPARK PLUG, (AC-DELCO #41-101)	02	F (L36)	6	12508387
2.	3-N2	3.410	ELEMENT, A/CL (AC-DELCO #A1163C)	97	F (L36)	1	25098463
	3-N2	3.410	ELEMENT, A/CL (PAPER) (AC-DELCO #A917C)	98-02	F (L36)	1	25042562
3.	3-M28	1.836	FILTER, OIL (AC-DELCO #PF47)	97-02	F (L36)	1	25010792
	3-M28	1.836	FILTER, OIL (AC-DELCO #UPF47)	97-00	F (L36)	1	25322835
	3-M28	1.836	FILTER, OIL (AC-DELCO #SPF47)	97-00	F (L36)	1	25325404
4.	3-A16	2.239	WIRE KIT, SPLG (AC-DELCO #706X)	97-99	F (L36)	1	12192355
	3-A16	2.239	WIRE KIT, SPLG (AC-DELCO #746CC)	00-02	F (L36)	1	12192469
5.	3-N10	3.890	FILTER, FUEL (AC-DELCO #GF627)	97	F	1	25121942

cardiagn.com

	3-N10	3.890	FILTER, FUEL (AC-DELCO #GF627)	98	F (L36)	1	25121942
	3-N10	3.890	FILTER, FUEL (AC-DELCO #GF627)	99-02	F	1	25121942
8.	3-N12	4.197	FILTER KIT, A/TRNS FLUID (USED W/SHALLOW PAN) (AC-DELCO #24200796)	97-02	F (M30)	1	24200796
9.	3-N12	4.196	GASKET, A/TRNS FLUID PAN (AC-DELCO #8654799)	97-02	F (M30)	1	8654799
10.	3-M27	1.745	VALVE, PCV (AC-DELCO #CV892C)	97-02	F (L36)	1	25043843

RPO DEFINITIONS

L36 – ENGINE GAS, 6 CYL, 3.8K, MFI, V6, HO (ERV6 SERIES)
M30 – TRANSMISSION,AUTOMATIC 4 SPEED,4L60E,ELECTRONIC

cardiagn.com

ILLUSTRATION INTENTIONALLY LEFT BLANK

OTOU-001

1998-2002 F NORMAL MAINTENANCE REPLACEMENT PARTS (LS1/5.7G)

NOTE: PLEASE REFER TO YOUR OWNER MANUAL FOR (NORMAL)SCHEDULED MAINTENANCE PARTS

1.	3-A20	2.270	SPARK PLUG, (AC-DELCO #41-974)	98-02	F (LS1)	8	12563707
	3-A20	2.270	SPARK PLUG, (41-931) (AC-DELCO #41-931)	98	F (LS1)	8	25162555
	3-A20	2.270	SPARK PLUG, (AC-DELCO #12)	98	F (LS1)	8	25332827
2.	3-N2	3.410	ELEMENT, A/CL (PAPER) (AC-DELCO #A917C)	98-02	F (LS1)	1	25042562
3.	3-M28	1.836	FILTER, OIL (1 835) (AC-DELCO #PF44C)	98-02	F (LS1)	1	729854
	3-M28	1.836	FILTER, OIL (PF44) (AC-DELCO #PF44)	98-02	F (LS1)	1	25010633
	3-M28	1.836	FILTER, OIL (AC-DELCO #SPF44)	98-01	F (LS1)	1	25329388
	3-M28	1.836	FILTER, OIL (AC-DELCO #UPF44)	98-01	F (LS1)	1	25329389
4.	3-A16	2.240	WIRE, SPLG (POS #1-#8) (STYLE 8DDD) (7.8" LONG) (2.239) (AC-DELCO #348S)	98-02	F (LS1)	8	12192064
5.	3-N10	3.890	FILTER, FUEL (AC-DELCO #GF627)	98	F (LS1)	1	25.21942

cardiagn.com

	3-N10	3.890	FILTER, FUEL (AC-DELCO #GF627)	99-02	F	1	25121942
8.	3-N12	4.197	FILTER KIT, A/TRNS FLUID (USED W/SHALLOW PAN) (AC-DELCO #24200796)	98-02	F (M30)	1	24200796
9.	3-N12	4.196	GASKET, A/TRNS FLUID PAN (AC-DELCO #8654799)	98-02	F (M30)	1	8654799
10.	3-M27	1.745	VALVE, PCV (AC-DELCO #CV948C)	98-02	F (LS1)	1	25179136

RPO DEFINITIONS

LS1 - ENGINE GAS, 8 CYL, 5.7L, SFI, ALUMINUM ENGINE
M30 TRANSMISSION,AUTOMATIC 4 SPEED,4L60E,ELECTRONIC

cardiagn.com

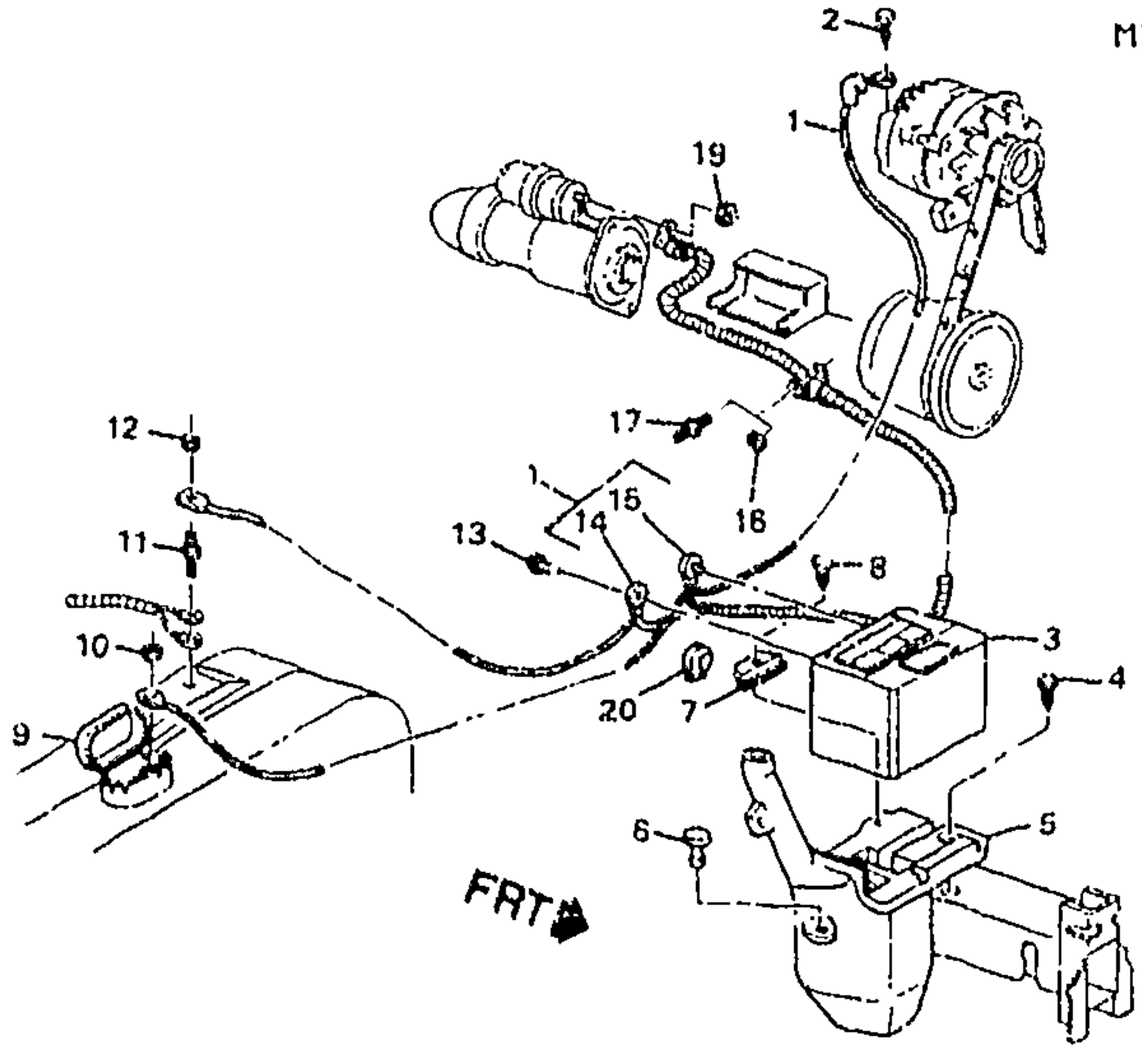

MF02-018

1993 F BATTERY CABLES & MOUNTING (LT1/5.7P)

1.		N.S.	CABLE, BAT POS & NEG (INCLS 2, 13, 14, 15, 20)				
2.	3-B3	2.343	BOLT, BAT POS CBL RET (PART OF 1)	93	F (LT1)	1	12059484
3.		N.S.	BATTERY, (75-60) (SEE AC DELCO CATALOG)				
4.		8.977	SCREW, HEX W/WA, M8X1.25X30, THD ROLL, PO (COOL RCVY RSVR)	93		1	11514478
5.	3-M27	1.240	RESERVOIR, COOL RCVY (W/RIBS)	93	F	1	10402687
6.	3-M27	1.240	RETAINER, COOL RCVY RSVR (USED ONLY W/ RESERVOIR 10188005) (BLACK) (PUSH IN W/SCREW) (6.3MM DIA X 23MM) (1.276)	93	F	1	20664092
7.	3-B2	2.335	RETAINER, BAT HOLDN	93	F	1	14005061
8.		8.977	SCREW, HWH TAP, M8X1.25X75, 24 OD, THD ROLLING, 6171, PO (BAT HOLDN RET)	93		1	11515984
9.	3-B27	2.483	BLOCK, FWD LP WRG HARN JUNC (FUSE & RELAY)	93	F	1	12162539
	3-B27	2.483	BLOCK, FWD LP WRG HARN JUNC (REMOTE ACCESS)	93	F	1	12186586
10.		8.917	NUT, HFH M6X1X6.5 ZOR 9 (BAT POS CBL)	93		1	3530297
11.	3-C15	2.559	STUD, FWD LP WRG HARN GND (FWD LP & CBL GRD)	93	F	1	10195518
12.		8.917	NUT, HFH M6X1X6.5 ZOR 9 (BAT NEG CBL)	93		1	3530297

cardiagn.com

13.		8.900	BOLT, HEX HD, 3/8-16X13/32, 1/4 THD, 1 5/32 TL, 51/64 OD, STL, ZP (BAT CBL TERM) (PART OF 1)	93	.....	2	8917444
14.	3-B2	2.341	CABLE, BAT NEG (PART OF 1) (39"LG) (W/O CLIPS & CONDUIT) (AC-DELCO #4XX39-1C)	93	F (LT1)	1	12157374
15.	3-B3	2.342	CABLE, BAT (TO BAT POS) (PART OF 1) (45"LG) (W/O CLIPS & CONDUIT) (AC-DELCO #4SX45-2T)	93	F (LT1)	1	12157373
16.		8.917	NUT, .375 16 HEX (BAT NEG CBL)	93	F (LT1)	1	14057004
17.	3-M26	0.029	STUD, ENG MT BRKT (ATTACHES NEG BAT CBL) (ATTACHES NEG BAT CBL) (2.183)	93	F (LT1)	1	12555065
19.		8.915	NUT-HEX, M8X1.25X4.0, BRASS, PLAIN (BAT POS CBL) (AC-DELCO #11509480)	93	.....	1	11509480
20.	3-B3	2.343	CLIP, BAT CBL (PART OF 1)	93	F	1	8917625

RPO DEFINITIONS
LT1 - ENGINE-GAS, 8 CYL, 5.7L(5.7P),MFI,HO

cardiagn.com

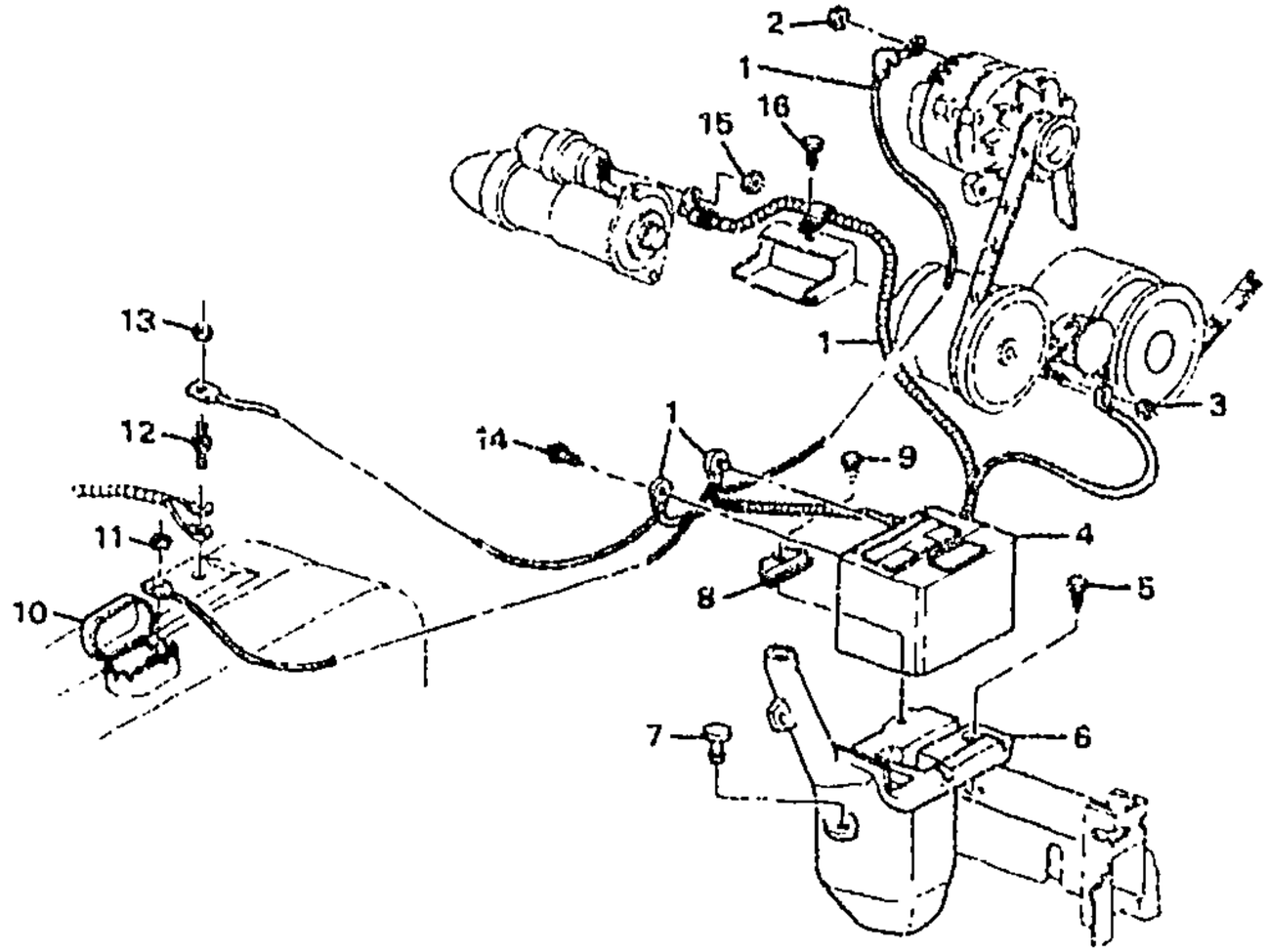

MF02-017

1993-1995 F BATTERY CABLES & MOUNTING (L32/3.4S)

1.	3-B3	2.342	CABLE, BAT POS (INCLS 14) (39"LG) (W/O CLIPS & CONDUIT) (AC-DELCO #4SX39-2H)	93-95 F (L32)	1	12157166
	3-B2	2.341	CABLE, BAT NEG (INCLS 14) (39"LG) (W/O CLIPS & CONDUIT) (AC-DELCO #4XX39-1C)	93-95 F (L32)	1	12157374
2.		8.917	NUT, HFH 6X1X7 SELF LK 14.2-OD (9) 7111M ALL MET PREV TORQ (BAT POS CBL) ...	93-95	1	11516075
3.		8.917	NUT, M10X1.5 (BAT NEG CBL) (8.915)	93-95	1	11501086
4.		N.S.	BATTERY, (75-60) (SEE AC DELCO CATALOG) (AC-DELCO #75-60)	....		
5.		8.977	SCREW, HEX W/WA, M8X1.25X30, THD ROLL, PO (COOL RCVY RSVR)	93-95	1	11514478
6.	3-M27	1.240	RESERVOIR, COOL RCVY (W/RIBS)	93-95 F	1	10402687
7.	3-M27	1.240	RETAINER, COOL RCVY RSVR (USED ONLY W/ RESERVOIR 10188005) (BLACK) (PUSH IN W/SCREW) (6.3MM DIA X 23MM) (1.276)	93 F	1	20664092
		N.S.	RETAINER, COOL RCVY RSVR (RETAINER NOT REQUIRED WITH NEW RESERVOIR)	94-95		
8.	3-B2	2.335	RETAINER, BAT HOLDN	93-95 F	1	14005061
9		8.977	SCREW, HWH TAP, M8X1.25X75, 24 OD, THD ROLLING, 6171, PO (BAT HOLDN RET)	93-95	1	11515984
10.	3-B27	2.483	BLOCK, FWD LP WRG HARN JUNC (FUSE & RELAY)	93-95 F	1	12162539

cardiagn.com

	3-B27	2.483	BLOCK, FWD LP WRG HARN JUNC (REMOTE ACCESS)	93-95	F	1	12186586
11.		8.917	NUT, HFH M6X1X6.5 ZOR 9 (BAT POS CBL)	93-95		1	3530297
12.	3-C15	2.559	STUD, FWD LP WRG HARN GND (FWD LP & CBL GRD)	93-95	F	1	10195518
13.		8.917	NUT, HFH M6X1X6.5 ZOR 9 (BAT NEG CBL)	93-95		1	3530297
14.		8.900	BOLT, HEX HD, 3/8-16X13/32, 1/4 THD, 1 5/32 TL, 51/64 OD, STL, ZP (CAT CBL TERM) (PART OF 1)	93-95		2	8917444
15.		8.915	NUT-HEX, M8X1.25X4.0, BRASS, PLAIN (BAT POS CBL) (AC-DELCO #11509480)	93-95		1	11509480
16.		8.977	SCREW, MET HEX HD (M6.3X1.81) (BAT POS & NEG CBL RET)	93-95		1	11502707

RPO DEFINITIONS
L32 - ENGINE,3.4L,V6,(3.4S),SFI,OHV

cardiagn.com

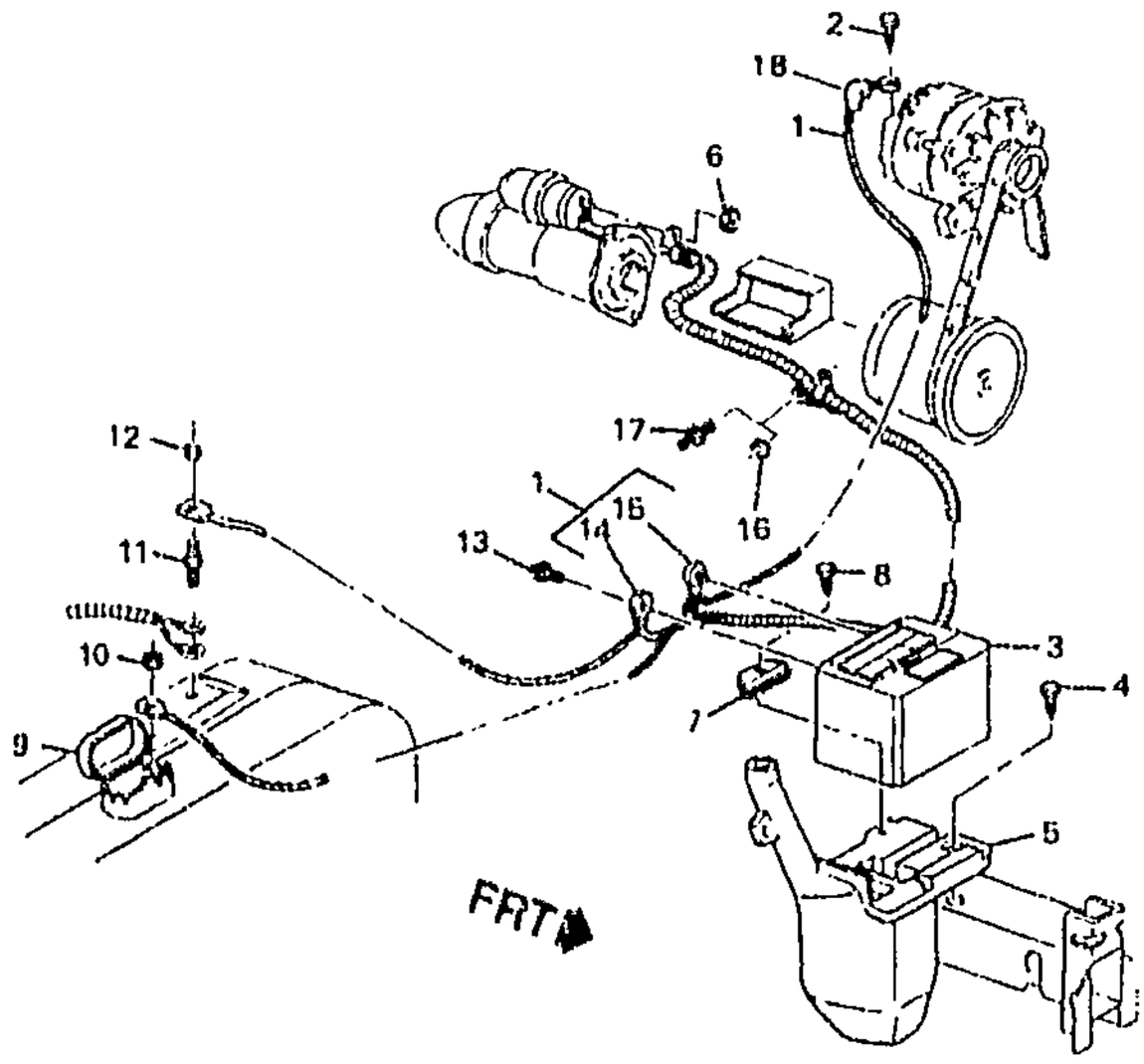

1994-1997 F BATTERY CABLES & MOUNTING (LT1/5.7P)

1.		N.S.	CABLE, BAT POS & NEG (CPS) (INCLS 2, 13, 14, 15)				
2.		8.915	NUT--METRIC STYLE 2 HEX, M8X1.25 (PART OF 1)	94-97	(LT1)	1	11501085
3.		N.S.	BATTERY, (75--60) (SEE AC DELCO CATALOG)				
4.		8.977	SCREW, HEX W/WA, M8X1.25X30, THD ROLL, PO (COOL RCVY RSVR)	94-97		1	11514478
5.	3-M27	1.240	RESERVOIR, COOL RCVY (W/RIBS)	94-97	F	1	10402687
6.		8.915	NUT-HEX, M8X1.25X4.0, BRASS, PLAIN (BAT POS CBL) (AC-DELCO #11509480)	94-97		1	11509480
7.	3-B2	2.335	RETAINER, BAT HOLDN	94--97	F	1	14005061
8.		8.977	SCREW, HWH TAP, M8X1.25X75, 24 OD, THD ROLLING, 6171, PO (BAT HOLDN RET)	94--97		1	11515984
9	3-B27	2.483	BLOCK, FWD LP WRG HARN JUNC (REMOTE ACCESS)	94-97	F	1	12186586
10.		8.917	NUT, HFH M6X1X6.5 ZOR 9 (BAT POS CBL)	94-97		1	3530297
11.	3-C15	2.569	STUD, FWD LP WRG HARN GND (FWD LP & CBL GRD)	94-97	F	1	10195518
12.		8.917	NUT, HFH M6X1X6.5 ZOR 9 (BAT	94-97		1	3530297

cardiagn.com

13.		8.900	BOLT, HEX HD, 3/8-16X13/32, 1/4 THD, 1 5/32 TL, 51/64 OD, STL, ZP (BAT CBL TERM) (PART OF 1)	94-97	.....	2	8917444
14.	3-B2	2.341	CABLE, BAT NEG (PART OF 1) (39"LG) (W/O CLIPS & CONDUIT) (AC--DELCO #4XX39-1C)	94-97	F (LT1)	1	12157374
15.	3-B3	2.342	CABLE, BAT (TO BAT POS) (PART OF 1) (45"LG) (W/O CLIPS & CONDUIT) (AC-DELCO #4SX45-2T)	94-97	F (LT1)	1	12157373
16.		8.917	NUT, .375 16 HEX (BAT NEG CBL)	94-97	F (LT1)	1	14057004
17.	3-M26	0.029	STUD, ENG MT BRKT (ATTACHES NEG BAT CBL) (ATTACHES NEG BAT CBL) (2.183)	94-97	F (LT1)	1	12555065
18.	3-A28	2.313	COVER, GEN WIRE TERM (BLACK) (TERMINAL BOOT COVER)	94-97	F (LT1)	1	12146808

RPO DEFINITIONS
LT1 – ENGINE-GAS, 8 CYL, 5.7L(5.7P),MFI,HO

cardiagn.com

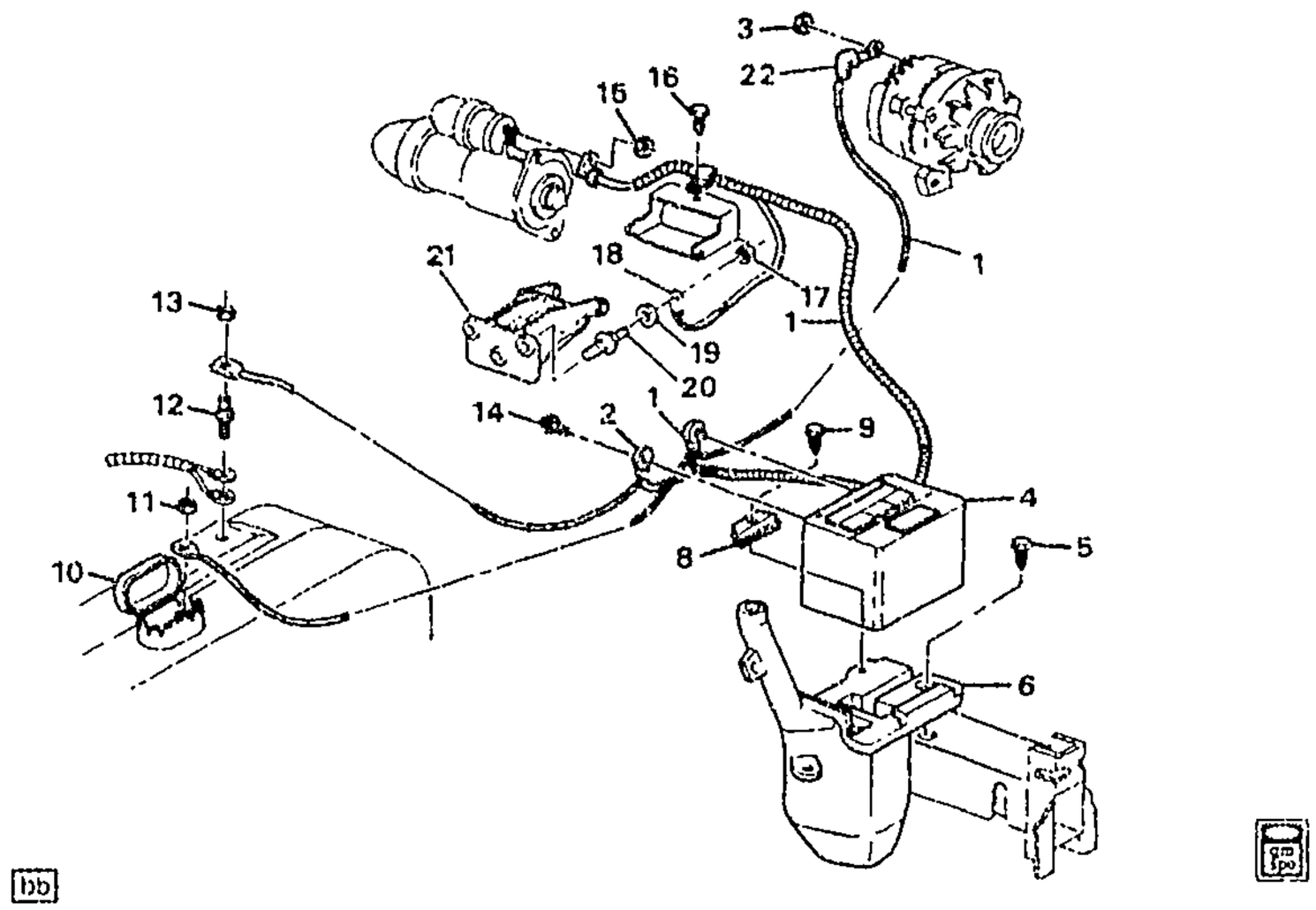

MF02-019

1995--1997 F BATTERY CABLES & MOUNTING (L36/3.8K)

1.	3-B3	2.342	**CABLE**, BAT POS (INCLS 14, 18) (AC-DELCO #2SX67-2)	95-97	F (L36)	1	12157081
2.	3-B2	2.341	**CABLE**, BAT NEG (INCL 14) (33"LG) (W/O CLIPS & CONDUIT) (AC-DELCO #2SX33A)	95-97	F (L36)	1	12157153
3.		8.915	**NUT-METRIC STYLE 2** HEX, M8X1.25 (NUT, BAT POS CBL TO GEN)	95-97	F	1	11501085
4.		N.S.	**BATTERY**, (75-60) (SEE AC DELCO CATALOG)		.....		
5.		8.977	**SCREW**, HEX W/WA, M8X1.25X30, THD ROLL, PO (COOL RCVY RSVR)	95-97	.....	1	11514478
6.	3-M27	1.240	**RESERVOIR**, COOL RCVY (W/RIBS)	95-97	F	1	10402687
8.	3-B2	2.335	**RETAINER**, BAT HOLDN	95-97	F	1	14005061
9.		8.977	**SCREW**, HWH TAP M8X1.25X75, 24 OD, THD ROLLING, 6171, PO (BAT HOLDN RET)	95-97	.....	1	11515984
10.	3-B27	2.483	**BLOCK**, FWD LP WRG HARN JUNC (FUSE & RELAY)	95-97	F	1	12162539
	3-B27	2.483	**BLOCK**, FWD LP WRG HARN JUNC (REMOTE ACCESS)	95-97	F	1	12186586
11.		8.917	**NUT**, HFH M6X1X6.5 ZOR 9 (BAT POS CBL)	95-97	.....	1	3530297
12.	3-C15	2.559	**STUD**, FWD LP WRG HARN GND (FWD LP & CBL GRD)	95-97	F	1	10195518
13.		8.917	**NUT**, HFH M6X1X6.5 ZOR 9 (BAT NEG CBL)	95-97	.....	1	3530297

cardiagn.com

14.		8.900	BOLT, HEX HD, 3/8-16X13/32, 1/4 THD, 1 5/32 TL, 51/64 OD, STL, ZP (BAT CBL TERM) (PART OF 1, 2)	95-97		2	8917444
15.		8.915	NUT-HEX, M8X1.25X4.0, BRASS, PLAIN (BAT POS CBL) (AC-DELCO #11509480)	95-97		1	11509480
16.		8.977	SCREW, MET HEX HD (M6.3X1.81) (BAT POS & NEG CBL RET)	95-97		1	11502707
17.	3-B3	2.343	NUT, BAT NEG CBL (M8X1.25X7.8) (8.915)	95-97	F	1	11501085
18.		N.S.	STRAP, RF GROUND (PART OF 1)				
19.		8.929	WASHER, FL .344X.688X.065 (BAT NEG CBL GND)	95-97	F	1	120393
20.	3-M26	0.029	STUD, ENG MT BRKT (ATCHS NEG BAT CBL; LH BRKT TO ENG)	95-97	F (L36)	1	10247276
21.	3-M26	0.029	BRACKET, ENG MT	95-97	F (L36)	RH	10265186
	3-M26	0.029	BRACKET, ENG MT	95-97	F (L36)	LH	10274964
22.	3-A28	2.313	COVER, GEN WIRE TERM (BLACK) (TERMINAL BOOT COVER) (2.343)	95	F (L36)	1	12146809
	3-A28	2.313	COVER, GEN WIRE TERM (BLACK) (TERMINAL BOOT COVER)	96-97	F (L36)	1	12146808

RPO DEFINITIONS

L36 – ENGINE GAS, 6 CYL, 3.8K, MFI, V6, HO (ERV6 SERIES)

cardiagn.com

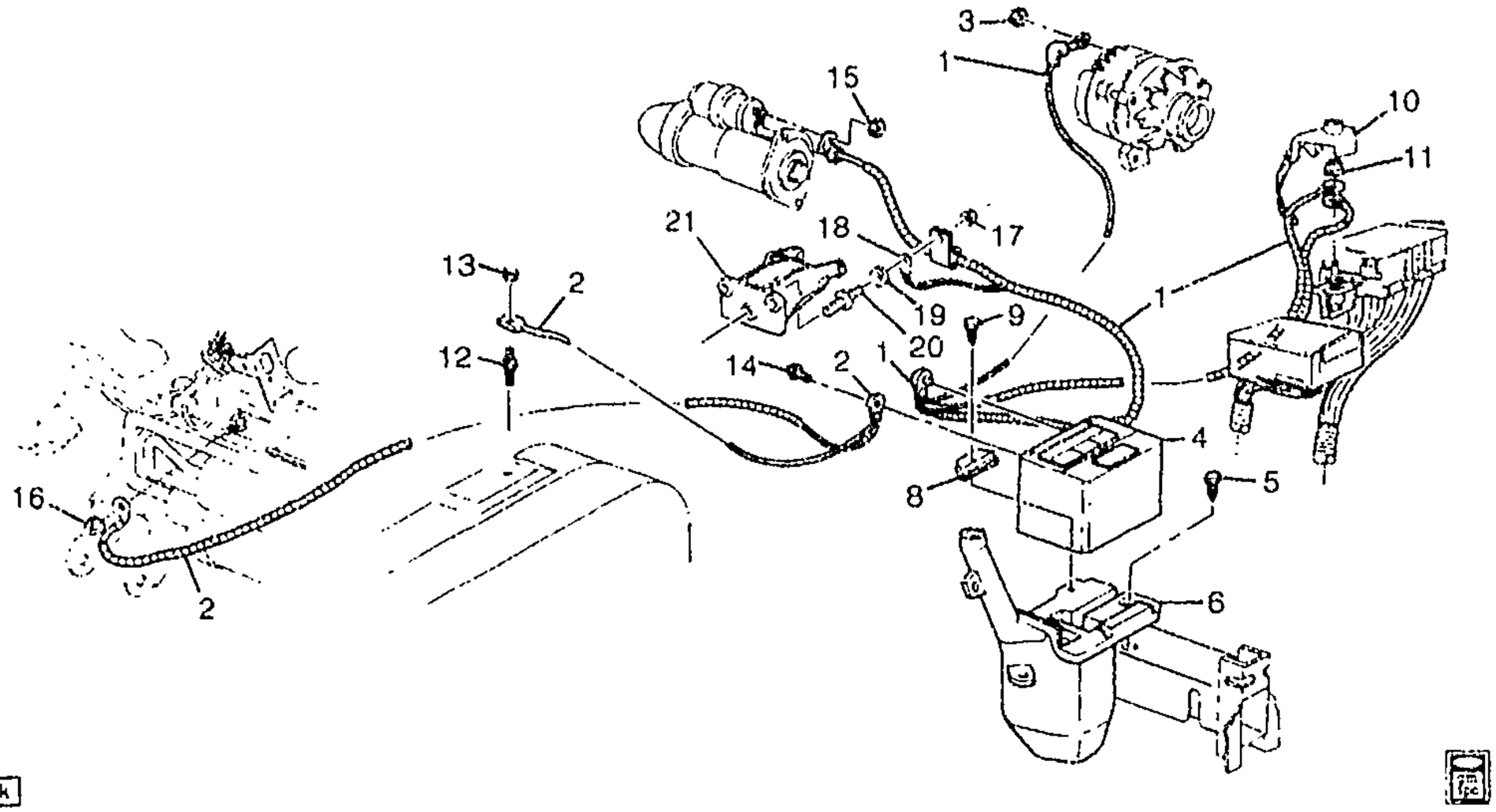

MF02-030

1998-2002 F BATTERY CABLES & MOUNTING (L36/3.8K)

1.	3-B3	2.342	CABLE, BAT POS (INCLS 14, 18) (64"LG) (AC-DELCO #2SX64-2F)	98-02	F (L36)	1	15321052
2.	3-B2	2.341	CABLE, BAT NEG (INCLS 14) (33"LG) (W/O CLIPS & CONDUIT) (AC-DELCO #2SX33A)	98-02	F (L36)	1	12157153
3.		8.915	NUT-METRIC STYLE 2 HEX, M8X1.25 (NUT, BAT POS CBL TO GEN)	98-02	F	1	11501085
4.		N.S.	BATTERY, (75-60) (SEE AC DELCO CATALOG)				
5.		8.977	SCREW, HEX W/WA, M8X1.25X30, THD ROLL, PO (COOL RCVY RSVR)	98-02	F	1	11514478
6.	3-M27	1.240	RESERVOIR, COOL RCVY (W/RIBS)	98-02	F	1	10402687
8.	3-B2	2.335	RETAINER, BAT HOLDN	98-02	F	1	14005061
9.		8.977	SCREW, HWH TAP, M8X1.25X75, 24 OD, THD ROLLING, 6171, PO (BAT HOLDN RET)	98-02	F	1	11515984
10.	3-B3	2.342	COVER, BAT BOOS POS CBL (BAT POS CBL)	98-02	F	1	12064852
11.		8.917	NUT, HFH M6X1X6.5 ZOR 9 (BAT POS CBL)	98-02		1	3530297
12.	3-C15	2.559	STUD, FWD LP WRG HARN GND	98-02	F	2	10195518
13.		8.917	NUT, HFH M6X1X6.5 ZOR 9 (BAT NEG CBL)	98-02		1	3530297

cardiagn.com

14.		8.900	**BOLT**, HEX HD. 3/8-16X13/32, 1/4 THD, 1 5/32 TL, 51/64 OD, STL, ZP (BAT CBL TERM) (PART OF 1, 2)	98-02	F	2	8917444
15.		8.915	**NUT-HEX**, M8X1.25X4.0, BRASS, PLAIN (BAT POS CBL) (AC-DELCO #11509480)	98-02	F	1	11509480
16.		8.915	**NUT-METRIC STYLE 2** HEX, M8X1.25 (BAT NEG CBL)	98-02	F	1	11501085
17.	3-B3	2.343	**NUT**, BAT POS CBL (M8X1.25X7.8) (8.915)	98-02	F	1	11501085
18.		N.S.	**STRAP**, ENG GND (PART OF 1)				
19.		8.929	**WASHER**, FL .344X.688X.065 (BAT NEG CBL GND)	98-99	F	1	120393
		N.S.	**WASHER**, BAT NEG CBL GND	00-02	F	1	120393
20.	3-M26	0.029	**STUD**, ENG MT BRKT (ATCHS NEG BAT CBL; LH BRKT TO ENG)	98-02	F (L36)	1	10247276
21.	3-M26	0.029	**BRACKET**, ENG MT	98-02	F (L36)	RH	10265186
	3-M26	0.029	**BRACKET**, ENG MT	98-02	F (L36)	LH	10274964

RPO DEFINITIONS
L36 – ENGINE GAS, 6 CYL, 3.8K, MFI, V6, HO (ERV6 SERIES)

cardiagn.com

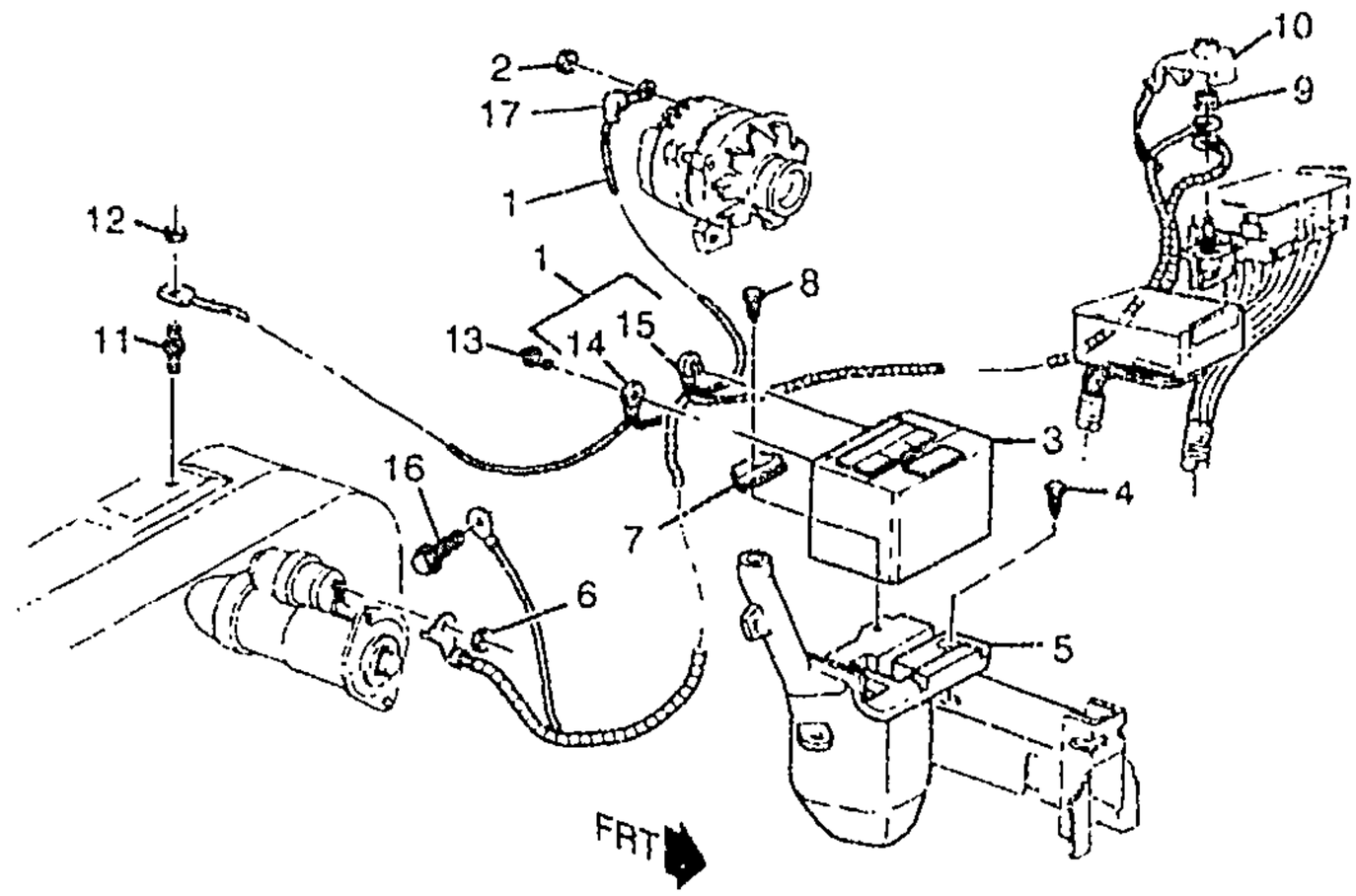

bb

MF02-031

1998-2002 F BATTERY CABLES & MOUNTING (LS1/5.7G)

1.		N.S.	CABLE, BAT POS & NEG (CPS) (INCLS 2)				
2.		8.915	NUT-METRIC STYLE 2 HEX, M8X1.25 (PART OF 1)	98-02	F	1	11501085
3.		N.S.	BATTERY, (75-60) (SEE AC DELCO CATALOG)				
4.		8.977	SCREW, HEX W/WA, M8X1.25X30, THD ROLL, PO (COOL RCVY RSVR)	98-02		1	11514478
5.	3-M27	1.240	RESERVOIR, COOL RCVY (W/RIBS)	98-02	F	1	10402687
6.		8.915	NUT-METRIC STYLE 2 HEX, M8X1.25 (BAT POS CBL)	98-02	F	1	11501085
7.	3-B2	2.335	RETAINER, BAT HOLDN	98-02	F	1	14005061
8.		8.977	SCREW, HWH TAP, M8X1.25X75, 24 OD, THD ROLLING, 6171, PO (BAT HOLDN RET)	98-02		1	11515984
9.		8.917	NUT, HFH M6X1X6.5 ZOR 9 (BAT POS CBL)	98-02		1	3530297
10.	3-B3	2.342	COVER, BAT BOOS POS CBL (BAT POS CBL)	98-02	F	1	12064852
11.	3-C15	2.559	STUD, FWD LP WRG HARN GND	98-02	F	2	10195518
12.		8.915	NUT-METRIC STYLE 2 HEX, M8X1.25 (BAT NEG CBL)	98-02		1	11501085
13.		8.900	BOLT, HEX HD, 3/8-16X13/32, 1/4 THD, 1 5/32 TL, 51/64 OD, STL, ZP (BAT CBL TERM)	98-02		2	8917444
14.	3-B2	2.341	CABLE, BAT NEG (39"LG) (W/O CLIPS & CONDUIT) (AC-DELCO	98-02	F (LS1)	1	12157374

cardiagn.com

							MF02-031
15.	3-B3	2.342	CABLE, BAT POS (AC-DELCO #4SX53-2)	98-02	F (LS1)	1	12157131
16.		8.900	SCREW, HEX M10X1.5X16 9.8 PE (BAT NEG CBL)	98-02	F	1	11513783
17.	3-A28	2.313	COVER, GEN WIRE TERM (BLACK) (TERMINAL BOOT COVER) (2.343)	98-02	F (LS1)	1	12146809

RPO DEFINITIONS

LS1 - ENGINE GAS, 8 CYL, 5.7L, SFI, ALUMINUM ENGINE

cardiagn.com

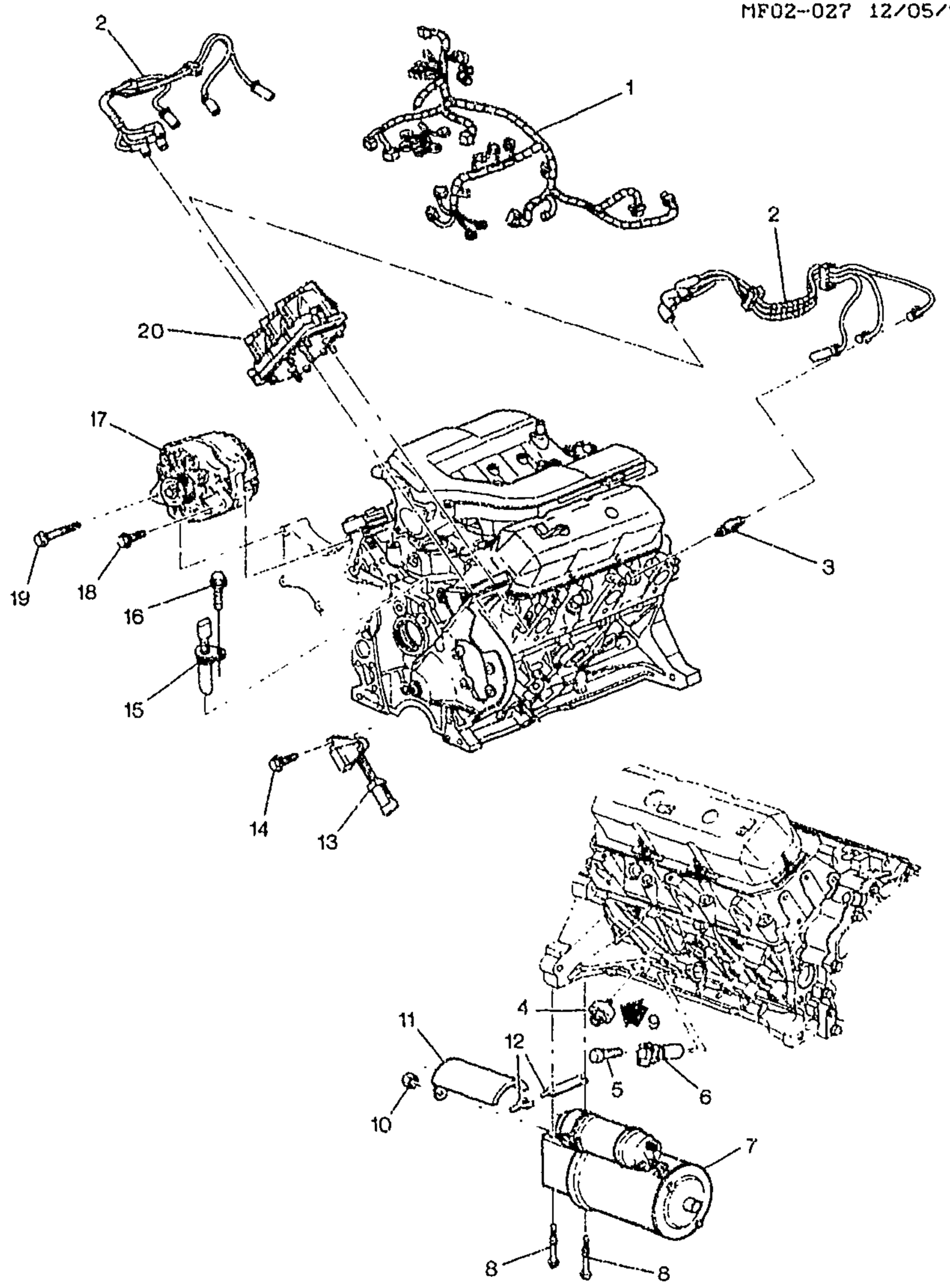

MF02-027

1993-1995 F ENGINE ELECTRICAL L32/(3.4L)

1.	3-C4	2.525	HARNESS, ENG WRG	93 F (L32, MD8, C41)	1	12106616
	3-C4	2.525	HARNESS, ENG WRG	93 F (L32, MD8, C60) (EXC UD6)	1	12106618
	3-C4	2.525	HARNESS, ENG WRG	93 F (L32, M49, C41)	1	12145075

cardiagn.com

	3–C4	2.525	HARNESS, ENG WRG	93	F (L32, C60) (EXC K34, T96)	1	12154263
	3–C4	2.525	HARNESS, ENG WRG (USE ON VEHS W/3–WAY GRAY CONN TO OIL PRESS GAUGE SEN HAVING TAN LEAD)	94	F (L32, M49, C41)	1	12145190
	3–C4	2.525	HARNESS, ENG WRG (USE ON VEHS W/3–WAY GRAY CONN TO OIL PRESS GAUGE SEN HAVING TAN LEAD)	94	F (L32, M30, C60) (EXC UD6)	1	12145191
	3–C4	2.525	HARNESS, ENG WRG (USE ON VEHS W/3–WAY GRAY CONN TO OIL PRESS GAUGE SEN HAVING TAN LEAD)	94	F (L32, M49, C60)	1	12145192
	3–C4	2.525	HARNESS, ENG WRG (USE ON VEHS W/2–WAY CONN TO OIL PRESS GAUGE SEN HAVING TAN LEAD &BLACK/WHITE STRIPED LEAD)	94	F (L32, M49, C41)	1	12145349
	3–C4	2.525	HARNESS, ENG WRG (USE ON VEHS W/2–WAY CONN TO OIL PRESS GAUGE SEN HAVING TAN LEAD &BLACK/WHITE STRIPED LEAD)	94	F (L32, M30, C60) (EXC UD6)	1	12145350
	3–C4	2.525	HARNESS, ENG WRG (USE ON VEHS W/2–WAY CONN TO OIL PRESS GAUGE SEN HAVING TAN LEAD & BLACK & WHITE STRIPED LEAD)	94	F (L32, M49, C60)	1	12145351
	3–C4	2.525	HARNESS, ENG WRG	95	F (L32, M30, C41)	1	12145178
	3–C4	2.525	HARNESS, ENG WRG	95	F (L32, M30, C60) (EXC UD6)	1	12145179
	3–C4	2.525	HARNESS, ENG WRG	95	F (L32, M49, C60)	1	12145337
	3–C4	2.525	HARNESS, ENG WRG	95	F (L32, M49, C41)	1	12145338
	3–C4	2.525	HARNESS, ENG WRG	93	F (L32, MD8, C60, UD6) (EXPORT)	1	12106674
	3–C4	2.525	HARNESS, ENG WRG (USE ON VEHS W/3–WAY GRAY CONN TO OIL PRESS GAUGE SEN HAVING TAN LEAD)	94	F (L32, M30, C60, UD6) (EXPORT)	1	12145193
	3–C4	2.525	HARNESS, ENG WRG (USE ON VEHS W/2–WAY CONN TO OIL PRESS GAUGE SEN HAVING TAN LEAD &BLACK & WHITE STRIPED LEAD)	94	F (L32, M30, C60, UD6) (EXPORT)	1	12145352
	3–C4	2.525	HARNESS, ENG WRG	95	F (L32, M30, C60, UD6) (EXPORT)	1	12145180
2.	3–A16	2.239	WIRE KIT, SPLG (CONTAINS SPLG WIRES #1–6) (AC–DELCO #726C)	93–95	F (L32)	1	12096409
	3–A16	2.240	WIRE, SPLG #1 CYL (28" STYLE DD) (AC–DELCO #324J)	93–95	F (L32)	1	12072150
	3–A16	2.240	WIRE, SPLG #2 CYL (18" STYLE DD) (AC–DELCO #327C)	93–95	F (L32)	1	12073902
	3–A16	2.240	WIRE, SPLG #2 CYL (STYLE DD–L, 28" LG) (AC–DELCO #324J)	93–95	F (L32)	1	12072150

cardiagn.com

	3–A16	2.240	WIRE, SPLG #3 CYL (32" STYLE EE) (AC–DELCO #327J)	93–95	F (L32)	1	12073908
	3–A16	2.240	WIRE, SPLG #4 CYL (20" LG, STYLE RR) (AC–DELCO #327D)	93–95	F (L32)	1	12073903
	3–A16	2.240	WIRE, SPLG #5 CYL (36" LG, STYLE EE) (AC–DELCO #327K) .	93–95	F (L32)	1	12073909
	3–A16	2.240	WIRE, SPLG #6 CYL (22" LG, STYLE RR) (AC–DELCO #327E) .	93–95	F (L32)	1	12073904
3.	3–A20	2.270	SPARK PLUG, (AC–DELCO #R43TSK)	93–95	F (L32)	6	5614168
	3–A20	2.270	SPARK PLUG, (AC–DELCO #41–803)	93–95	FP (L32)	1	88901009
4.	3–B4	2.383	SENSOR, KNOCK (AC–DELCO #213–266)	93–95	F (L32)	1	10456207
5.		8.900	BOLT, HFH (M6X1X20, 13 THD, 13.6 OD, 9.8 PO) (CR/SHF POSN SEN) (AC–DELCO #11517518) .	93–95	F	1	11517518
6.	3–B4	2.383	SENSOR, CR/SHF POSN (AC–DELCO #213–150)	93–95	F	1	10456108
7.	3–A9	2.041	STARTER, (REMAN) (CPS. SEE "STARTER MTR MTG (L32) AND STARTER MTR (L32) " FOR DETAILED ILLUSTRATED VIEW.) (AC–DELCO #323–1068)	93–95	F (L32)	1	10465393
8.	3–A9	2.042	BOLT, STRTR (M10X1.5X102 9.8 ZP)	93–95	F (L32)	2	12337929
9.		N.S.	SEALER, KNOCK SENSOR		.....		
10.	3–A9	2.042	NUT, STRTR SHLD (8.917)	93–95	F (L32)	2	10108651
11.	3–A9	2.042	SHIELD, STRTR (AC–DELCO #10468258)	93–95	F (L32)	1	10468258
12.	3–A9	2.042	SHIM, STRTR (USE FOR HEAVY DUTY REPAIR) (1.0MM THICK) .	93–95	F (L32)	AR	14057993
13.	3–B4	2.383	SENSOR, CR/SHF POSN (AC–DELCO #213–147)	93–95	F	1	10137663
14.	3–B4	2.383	BOLT, CR/SHF POSN SEN (6X1X16 9.8 PE) (24XTO ECM)) (8.900)	93–95	F	2	10205042
15.	3–B4	2.383	SENSOR, CM/SHF POSN (AC–DELCO #213–245)	93–95	F (L32)	1	24508214
16.		8.900	BOLT M6X1X12, 10 THD, 11.6 OD, 9.8 GM500–M, POR, MACH (CM/SHF POSN SEN) (AC–DELCO #11514149)	93–95	F	AR	11514149
17.	3–A25	2.275	GENERATOR, (REMAN) (SEE "GENERATOR MOUNTING (L32) " IN GRP. 2.000 FOR DETAILED ILLUS. VIEW) (AC–DELCO #321–1086)	93–95	F (L32)	1	10463624
18.		8.900	BOLT, M10X1.5X32, 28.10 THD, 20.28 OD, 10.9, GM 7114M (GEN) (AC–DELCO #179–2006)	93–95	F	1	15726460
19.		8.900	BOLT, HFH M10X1.5X130 9.8 PZOR (GEN BRKT)	93–95	F	1	11508489
20.		N.S.	MODULE, ELEK IGN CONT (CPS SEE "COIL & MODULE-IGNITION (L32) " IN GRP. 2.000 FOR DETAILED ILLUS. VIEW)		....		

cardiagn.com

RPO DEFINITIONS

C41 – HEATER,OUTSIDE AIR,WITH FAN AND DEFROSTER
C60 – AIR CONDITIONER,FRONT,MANUAL CONTROLS
K34 – CRUISE CONTROL,AUTOMATIC,ELECTRONIC
L32 – ENGINE,3.4L,V6,(3.4S),SFI,OHV
MD8 – TRANSMISSION,AUTOMATIC 4–SPEED(THM700R4/4L60)
M30 – TRANSMISSION,AUTOMATIC 4 SPEED,4L60E,ELECTRONIC
M49 – TRANSMISSION MAN 5 SPD, BORG WARNER, 77MM, 3.75 1ST, .76 5TH, O/D
T96 – LAMP,FRONT FOG
UD6 – ALARM,EXHAUST TEMPERATURE(EXPORT)

cardiagn.com

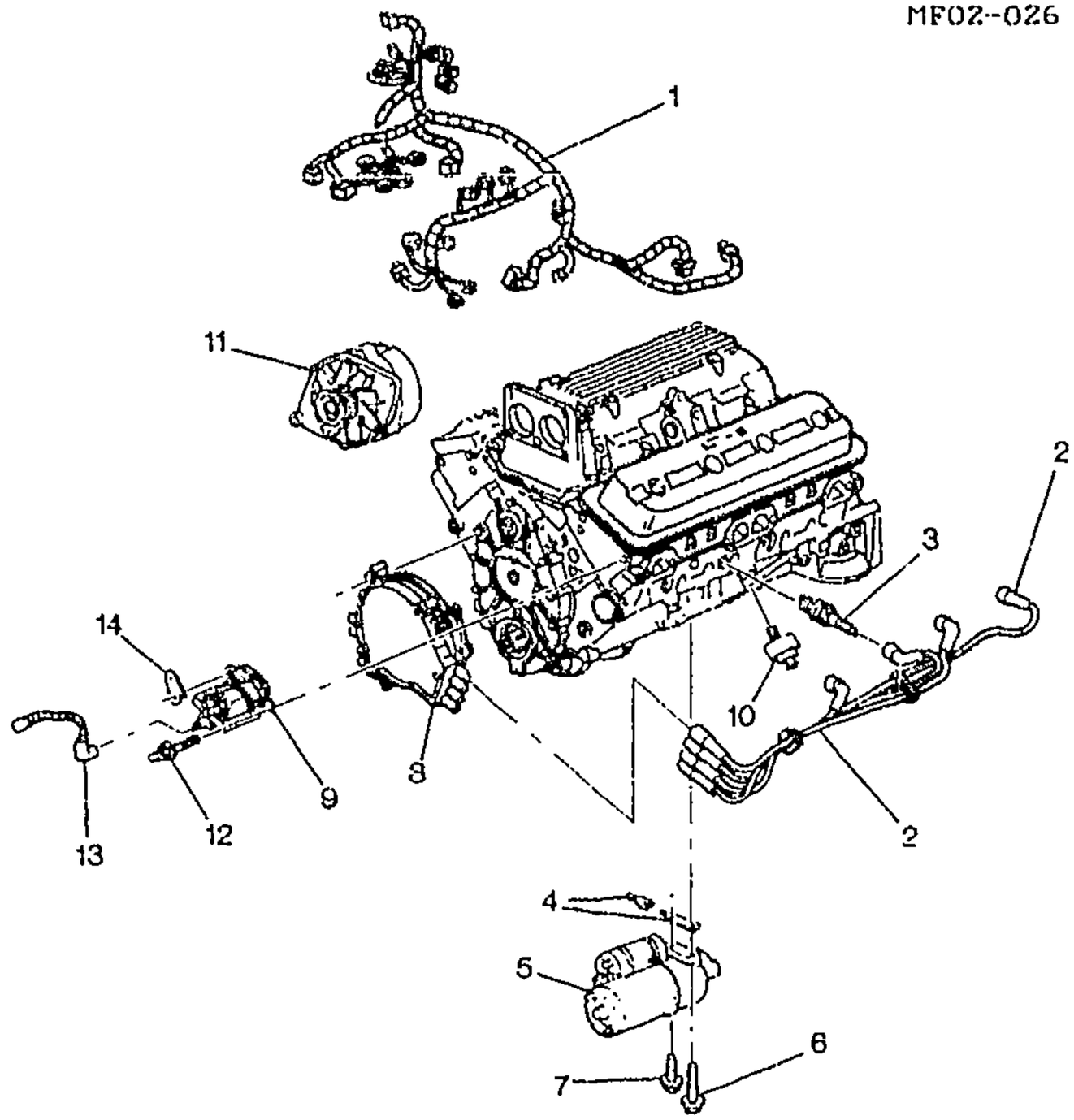

MF02-026

1993-1997 F ENGINE ELECTRICAL LT1/(5.7P)

1.	3-C4	2.525	HARNESS, ENG WRG	93	F (LT1, C60, MN6)	1	12145078
	3-C4	2.525	HARNESS, ENG WRG	93	F (LT1, C41, MN6)	1	12145079
	3-C4	2.525	HARNESS, ENG WRG	93	F (LT1, MD8, C41)	1	12145080
	3-C4	2.525	HARNESS, ENG WRG	94	F (LT1, M30, C60) (EXC UD6)	1	12145304
	3-C4	2.525	HARNESS, ENG WRG	94	F (LT1, C60, MN6)	1	12145305
	3-C4	2.525	HARNESS, ENG WRG	94	F (LT1, C41, MN6)	1	12145306
	3-C4	2.525	HARNESS, ENG WRG	94	F (LT1, M30, C41)	1	12145308
	3-C4	2.525	HARNESS, ENG WRG	95	F (LT1, M30, C60) (EXC UD6)	1	12145173
	3-C4	2.525	HARNESS, ENG WRG	95	F (LT1, C60, MN6)	1	12145174
	3-C4	2.525	HARNESS, ENG WRG	95	F (LT1, C41, MN6)	1	12145175
	3-C4	2.525	HARNESS, ENG WRG	95	F (LT1, M30, C41)	1	12145177
	3-C4	2.525	HARNESS, ENG WRG	96	F (LT1, MM6, C60)	1	12145344
	3-C4	2.525	HARNESS, ENG WRG	96	F (LT1, M30, C60)	1	12145346
	3-C4	2.525	HARNESS, ENG WRG	97	F (LT1, M30, C60)	1	12145826
	3-C4	2.525	HARNESS, ENG WRG	97	F (LT1, MM6, C60)	1	12145827
	3-C4	2.525	HARNESS, ENG WRG (INCLS ECM WRG)	93	F (LT1, MD8, C60) (EXC UD6)	1	12145077
	3-C4	2.525	HARNESS, ENG WRG (OVER TEMP PROBE)	93	F (LT1, MD8, C60)	1	12145185
	3-C4	2.525	HARNESS, ENG WRG	94	F (LT1, M30, C60, UD6) (EXPORT)	1	12145307

cardiagn.com

	3-C4	2.525	HARNESS, ENG WRG	95	F (LT1, M30, C60, UD6) (EXPORT)	1	12145176
	3-C4	2.525	HARNESS, ENG WRG (OVER TEMP PROBE)	93	F (LT1, MD8, C60, UD6) (EXPORT)	1	12145185
2.	3-A16	2.239	WIRE KIT, SPLG (CONTAINS SPLG WIRES #1-8) (INCL RH & LH SPLG WRG HARN & IGN COIL WRG HARN) (AC-DELCO #718B)	93	F (LT1)	1	12096417
	3-A16	2.239	WIRE KIT, SPLG (CONTAINS SPLG WIRES #1-8) (INCL RH & LH SPLG WRG HARN & IGN COIL WRG HARN) (AC-DELCO #718G)	94-95	F (LT1)	1	12096439
	3-A16	2.239	WIRE KIT, SPLG (CONTAINS SPLG WIRES #1-8) (AC-DELCO #748E)	96-97	F (LT1)	1	12173592
	3-A16	2.240	WIRE, SPLG #1 CYL (16" LG) (LEAD STYLE 16 VV) (AC-DELCO #340F)	94-95	F (LT1)	1	12096457
	3-A16	2.240	WIRE, SPLG #1 CYL (16" LG) (LEAD STYLE 16VV) (AC-DELCO #346H)	96-97	F (LT1)	1	12173570
	3-A16	2.240	WIRE, SPLG #1 CYL (STYLE 14VV, 14"LG) (AC-DELCO #341E)	93	F (LT1)	1	12173409
	3-A16	2.240	WIRE, SPLG #2 CYL (18" LG) (LEAD STYLE 18 VV) (AC-DELCO #340G)	93-95	F (LT1)	1	12096458
	3-A16	2.240	WIRE, SPLG #2 CYL (AC-DELCO #350V)	96-97	F (LT1)	1	12192351
	3-A16	2.240	WIRE, SPLG #2 CYL (STYLE 18FFF, 7MM LEAD) (AC-DELCO #351A)	96-97	F (LT1)	1	12192356
	3-A16	2.240	WIRE, SPLG #3 CYL (16" LG) (LEAD STYLE 16 VV) (AC-DELCO #340F)	93	F (LT1)	1	12096457
	3-A16	2.240	WIRE, SPLG #3 CYL (18" LG) (LEAD STYLE 18 VV) (AC-DELCO #340G)	94-95	F (LT1)	1	12096458
	3-A16	2.240	WIRE, SPLG #3 CYL (STYLE 18FFF, 7MM LEAD) (AC-DELCO #351A)	96-97	F (LT1)	1	12192356
	3-A16	2.240	WIRE, SPLG #4 CYL (22 LONG) (LEAD STYLE 22-VV) (AC-DELCO #340H)	93-95	F (LT1)	1	12096459
	3-A16	2.240	WIRE, SPLG #4 CYL (22" LONG) (7MM DIA WIRE, STYLE 22FFF) (AC-DELCO #351C)	96-97	F (LT1)	1	12192358
	3-A16	2.240	WIRE, SPLG #5 CYL (20" LG, STYLE 20VV) (AC-DELCO #341F)	93	F (LT1)	1	12173410
	3-A16	2.240	WIRE, SPLG #5 CYL (24"LONG) (LEAD STYLE 24 VV) (AC-DELCO #340J)	94-95	F (LT1)	1	12096460
	3-A16	2.240	WIRE, SPLG #5 CYL (24" LONG) (7MM DIA WIRE, STYLE 24FFF) (AC-DELCO #351D)	96-97	F (LT1)	1	12192359

cardiaopn.com

	3–A16	2.240	WIRE, SPLG #6 CYL (28" LG) (LEAD STYLE 28–VV) (AC–DELCO #340K)	93–95	F (LT1)	1	12096461
	3–A16	2.240	WIRE, SPLG #6 CYL (AC–DELCO #351F)	96–97	F (LT1)	1	12192361
	3–A16	2.240	WIRE, SPLG #7 CYL (36" LG) (LEAD STYLE 36VV) (AC–DELCO #340M)	93–95	F (LT1)	1	12096462
	3–A16	2.240	WIRE, SPLG #7 CYL (36" LG) (LEAD STYLE 36VV) (AC–DELCO #346S)	96–97	F (LT1)	1	12173576
	3–A16	2.240	WIRE, SPLG #8 CYL (32" LONG) (LEAD STYLE 32VV, 7MM DIA) (AC–DELCO #340N)	93–95	F (LT1)	1	12096465
	3–A16	2.240	WIRE, SPLG #8 CYL (32" LONG) (AC–DELCO #347C)	96–97	F (LT1)	1	12173587
3.	3–A20	2.270	SPARK PLUG, (41–906) (AC–DELCO #41–906)	93–95	F (LT1)	8	5614244
	3–A20	2.270	SPARK PLUG, (41–943) (AC–DELCO #41–943)	96–97	F (LT1)	8	25166821
4.	3–A9	2.042	SHIM, STRTR (1 X 1 7/8 X 5/32, STEEL)	93–97	F (LT1)	AR	1246249
	3–A9	2.042	SHIM, STRTR (24.4X106.7X0.38 STL) (FULL)	93–97	F (LT1)	AR	10008053
5.	3–A9	2.041	STARTER, (REMAN) (SEE "STARTER MOTOR MOUNTING (LT1) " IN GRP. 2.000 FOR DETAILED ILLUSTRATED VIEW) (AC–DELCO #323–480)	93–94	F (LT1)	1	10465143
	3–A9	2.041	STARTER, (REMAN) (PROD 9000798) (SEE "STARTER MOTOR MOUNTING (LT1) " IN GRP. 2.000 FOR DETAILED ILLUSTRATED VIEW) (AC–DELCO #323–488)	95–97	F (LT1)	1	10465293
6.	3–A9	2.042	BOLT, STRTR (INBOARD) (3/8–16X1.87)	93–94	F	1	14097279
	3–A9	2.042	BOLT, STRTR (INBOARD) (3/8–16X4.33)	95–97	F	1	12338064
7.	3–A9	2.042	BOLT, STRTR (OUTBOARD) (3/8–16X4 11/16)	93–94	F	1	14097278
	3–A9	2.042	BOLT, STRTR (OUTBOARD) (3/8–16 X 1.33)	95–97	F	1	14037733
8.	3–B4	2.361	DISTRIBUTOR, (SEE "DISTRIBUTOR/IGNITION (LT1) " FOR DETAILED ILLUS. VIEW) (AC–DELCO #10457702)	93–94	F (LT1)	1	10457702
	3–B4	2.361	DISTRIBUTOR, (SEE "DISTRIBUTOR/IGNITION (LT1) " FOR DETAILED ILLUS. VIEW) (W/PUMP GSKT SHOULD BE ORDERED ALSO) (AC–DELCO #1104032)	95–97	F (LT1)	1	1104032
9.	3–A12	2.170	COIL, IGN (SEE "COIL & MODULE/IGNITION (LT1) " FOR DETAILED ILLUS. VIEW) (AC–DELCO #D535)	93	F (LT1)	1	1115315

cardiagn.com

	3-A12	2.170	COIL, IGN (SEE "COIL & MODULE/IGNITION (LT1) " FOR DETAILED ILLUS. VIEW) (AC-DELCO #D573)	94-95	F (LT1)	1	10477208
	3-A12	2.170	COIL, IGN (SEE "COIL & MODULE/IGNITION (LT1) " FOR DETAILED ILLUS. VIEW) (AC-DELCO #D577)	96-97	F (LT1)	1	10489421
10.	3-B4	2.383	SENSOR, KNOCK (AC-DELCO #213-96)	93-95	F (LT1)	1	10456126
	3-B4	2.383	SENSOR, KNOCK (AC-DELCO #213-325)	96-97	F (LT1)	1	10456287
11.	3-A25	2.275	GENERATOR, (REMAN) (AC-DELCO #321-1053)	93	F (LT1)	1	10463446
	3-A25	2.275	GENERATOR, (REMAN) (AC-DELCO #321-1113)	96-97	F (LT1)	1	10463680
	3-A25	2.275	GENERATOR, (REMAN) (ID BY P/N 10480111 STAMPED IN PART) (AC-DELCO #321-1113)	94	F (LT1) (2ND DES)	1	10463680
	3-A25	2.275	GENERATOR, (REMAN) (ID BY P/N 10480131 STAMPED IN PART) (AC-DELCO #321-1053)	94	F (LT1) (1ST DES)	1	10463446
	3-A25	2.275	GENERATOR, (REMAN) (ID BY P/N 10480203 STAMPED IN PART) (AC-DELCO #321-1113)	95	F (LT1)	1	10463680
12.		N.S.	STUD, IGN COIL	93	.....		
	3-A12	2.183	STUD, IGN COIL (INBOARD & OUTBOARD)	95-97	F (LT1)	2	12555065
	3-A12	2.183	STUD, IGN COIL (INBOARD) (STUD, HEX 3/8-16X.80-3/8-16X.80 300M POR) (8.981)	94	F (LT1)	1	14057279
	3-A12	2.183	STUD, IGN COIL (OUTBOARD) ..	94	F (LT1)	1	12555065
13.	3-A16	2.240	WIRE, IGN COIL (COIL WIRE WITH 1-90 DEGREE BOOT& 1-STRAIGHT BOOT) (AC-DELCO #340R)	93-95	F (LT1)	1	12096466
	3-A16	2.240	WIRE, IGN COIL (10" LG) (SECONDARY) (AC-DELCO #346U)	96-97	F (LT1)	1	12173578
14.	3-N2	3.145	RETAINER, EVAP EMIS CNSTR PURGE TUBE	93-97	F (LT1)	1	10186192

RPO DEFINITIONS

C41 - HEATER,OUTSIDE AIR,WITH FAN AND DEFROSTER
C60 - AIR CONDITIONER,FRONT,MANUAL CONTROLS
LT1 - ENGINE-GAS, 8 CYL, 5.7L(5.7P),MFI,HO
MD8 - TRANSMISSION,AUTOMATIC 4-SPEED(THM700R4/4L60)
MM6 - TRANSMISSION MAN 6 SPD, BORG WARNER, 85MM, 1ST 2.66, 6TH 0.50, O/D
MN6 - TRANSMISSION,MANUAL 6-SPEED PROVISIONS(MERCHANDISING OPTION)
M30 - TRANSMISSION,AUTOMATIC 4 SPEED,4L60E,ELECTRONIC
UD6 - ALARM,EXHAUST TEMPERATURE(EXPORT)

cardiagn.com

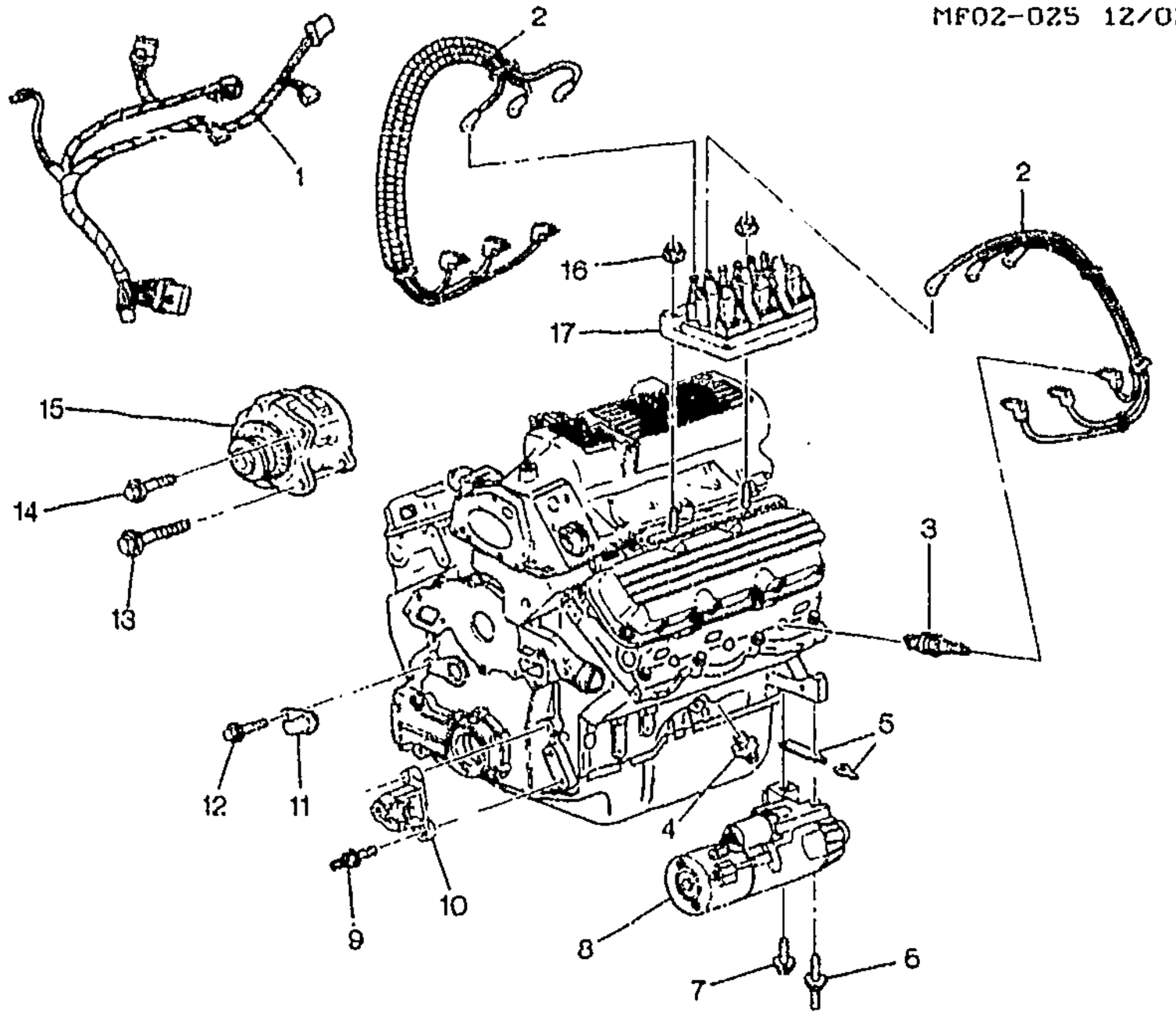

MF02-025

1995 F ENGINE ELECTRICAL L36/(3.8K)

1.	3-C4	2.525	HARNESS, ENG WRG	95 F (L36, M30, C60)	1	12145902
2.	3-A16	2.240	WIRE, SPLG #1 CYL (STYLE 30EEE, 7MM LEAD) (30" LONG) (30"LONG) (7MM DIA WIRE, STYLE 30EEE.) (*KIT1) (AC-DELCO #350U)	95 F (L36)	1	12192350
	3-A16	2.240	WIRE, SPLG #2 CYL (*KIT1) (AC-DELCO #350V)	95 F (L36)	1	12192351
	3-A16	2.240	WIRE, SPLG #3 CYL (*KIT1) (AC-DELCO #350T)	95 F (L36)	1	12192349
	3-A16	2.240	WIRE, SPLG #4 CYL (STYLE 34EEE, 7MM LEAD.) (34"LONG) (*KIT1) (AC-DELCO #350W) ...	95 F (L36)	1	12192352
	3-A16	2.240	WIRE, SPLG #5 CYL (*KIT1) (AC-DELCO #350S)	95 F (L36)	1	12192348
	3-A16	2.240	WIRE, SPLG #6 CYL (40" LG) (STYLE 40AA-L, 7MM LEAD.) (*KIT1) (AC-DELCO #341C)	95 F (L36)	1	12173408
3.	3-A20	2.270	SPARK PLUG, (AC-DELCO #41-606)	95 F (L36)	6	5614303
4.	3-B4	2.383	SENSOR, KNOCK (AC-DELCO #213-274)	95 F (L36)	2	10456205
5.	3-A9	2.042	SHIM, STRTR (USE FOR HEAVY DUTY REPAIR) (1.0MM THICK) ..	95 F (L36)	AR	14057993

cardiagn.com

6.	3–A9	2.041	STUD, STRTR (OUTBOARD) (2.042)	95	F (L36)	1	24503612
7.	3–A9	2.042	BOLT, STRTR (M10X1.5X118) (#1 INBOARD HOLE)	95	F	1	14086077
8.	3–A9	2.041	STARTER, (REMAN) (NO CPS) (AC–DELCO #323–501)	95	F (L36)	1	10455309
9.	3–M26	0.206	STUD, ENG FRT CVR (CR/SHF POSN SEN SHLD) (HEX W/65 OD X .06 THK WA, 5/16–18X3.07 W2.6 THD)	95	F (L36)	1	24504718
	3–M26	0.206	STUD, ENG FRT CVR (THRU FRT TO BLK) (HEX W/.65 OD X .06 THK WA, 5/16–18X1.53 W/1.1 THD)	95	F (L36)	2	24504717
10.	3–B4	2 383	SENSOR, CR/SHF POSN (4 PIN) (AC–DELCO #213–151)	95	F (L36)	1	10456161
11.	3–B4	2.383	SENSOR, CM/SHF POSN (AC–DELCO #213–346)	95	F (L36)	1	10456148
12.	3–B4	2.383	BOLT, CM/SHF POSN SEN (HEX–W/FLAT WA, 1/4–20X.69, .55 THD, 5 OD, 300M, PL, W/ADHES) (AC–DELCO #25526395)	95	F (L36)	1	25526395
13.		8.900	BOLT, HFH M8X1.25X75, 33.2 THD, 9.8 PO (GEN)	95	F	1	10130949
14.		8.900	BOLT, HFH M10X1.5X75 10.9PZOR (GEN)	95	F	1	11508540
15.	3–A25	2.275	GENERATOR, (REMAN) (AC–DELCO #321–1423)	95	F (L36, K68)	1	10464075
16.		8.917	NUT, HFH, M8X1.25, 17.9 OD, 738 THK, 13MM HEX, 10, ZF (ELEK ICM BRKT) (8.915) (AC–DELCO #11514596)	95	F	2	11514596
17.		N.S.	MODULE, ELEK IGN CONT ((W/COIL) (SEE "COIL & MODULE/IGNITION"ILLUSTRATI ON IN GRP. 2.000 FOR DETAILED VIEW)				

SERVICE KITS

1.	3–A16	2.239	WIRE KIT, SPLG (INCLS 2: SPLG WIRES #1, 2, 3, 4, 5, 6) (AC–DELCO #706X)	95	F (L36)	1	12192355

RPO DEFINITIONS
C60 – AIR CONDITIONER,FRONT,MANUAL CONTROLS
K68 – GENERATOR,105 AMPERE
L36 – ENGINE GAS, 6 CYL, 3.8K, MFI, V6, HO (ERV6 SERIES)
M30 – TRANSMISSION,AUTOMATIC 4 SPEED,4L60E,ELECTRONIC

cardiagn.com

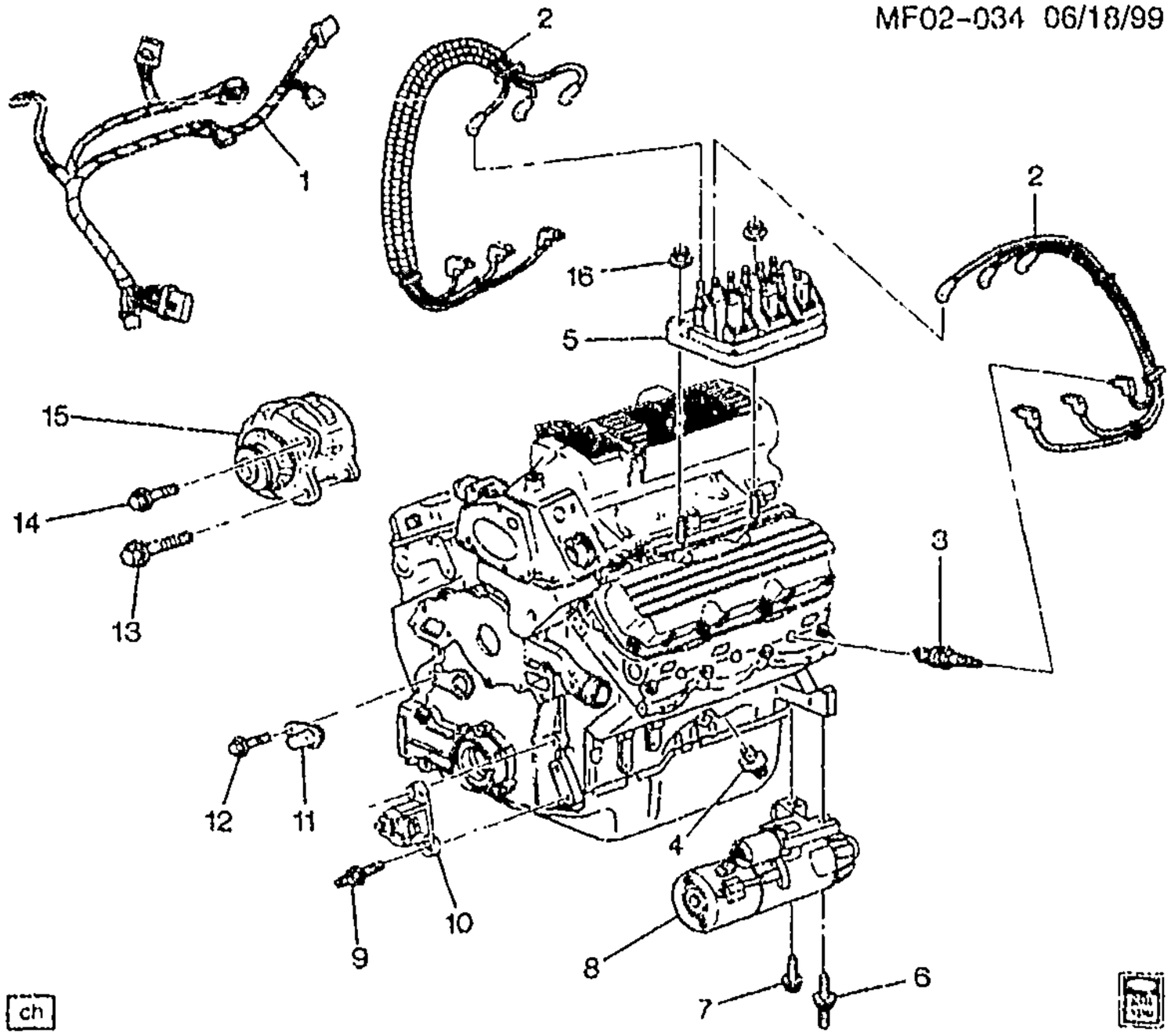

MF02-034

1996-2002 F ENGINE ELECTRICAL L36/(3.8K)

1.	3-C4	2.525	HARNESS, ENG WRG	96	F (L36, M49, C60)	1	12177326
	3-C4	2.525	HARNESS, ENG WRG	96	F (L36, M49, C41)	1	12177451
	3-C4	2.525	HARNESS, ENG WRG	96	F (L36, M30, C60, UD6)	1	12177453
	3-C4	2.525	HARNESS, ENG WRG	96	F (L36, M30, C60) (EXC UD6)	1	12177454
	3-C4	2.525	HARNESS, ENG WRG	97	F (L36, M30, C60) (EXC ABN, UD6)	1	12145606
	3-C4	2.525	HARNESS, ENG WRG	97	F (L36, M49, C60) (EXC ABN)	1	12145607
	3-C4	2.525	HARNESS, ENG WRG	97	F (L36, M30, C60, UD6)	1	12145609
	3-C4	2.525	HARNESS, ENG WRG	98	F (L36, M30, C60)	1	12177562
	3-C4	2.525	HARNESS, ENG WRG	98	F (L36, M49, C60)	1	12177563
	3-C4	2.525	HARNESS, ENG WRG	99	F (L36, M30)	1	12177365
	3-C4	2.525	HARNESS, ENG WRG	99	F (L36, M49)	1	12177366
	3-C4	2.525	HARNESS, ENG WRG	00-02	F (L36, M30)	1	12177654
	3-C4	2.525	HARNESS, ENG WRG	00-02	F (L36, M49)	1	12177655
2.	3-A16	2.240	WIRE, SPLG #1 CYL (7MM LEAD) (STYLE 24RR-L) (*KIT1) (AC-DELCO #348C)	00	F (L36)	1	12192053
	3-A16	2.240	WIRE, SPLG #1 CYL (24"LONG STYLE RR-L) (7MM LEAD) (*KIT1) (2.239) (AC-DELCO #354D)	01-02	F (L36)	1	12192476

cardiagn.com

	3–A16	2.240	WIRE, SPLG #1 CYL (STYLE 30EEE, 7MM LEAD) (30" LONG) (30"LONG) (7MM DIA WIRE, STYLE 30EEE.) (*KIT1) (AC–DELCO #350U)	96–99	F (L36)	1	12192350
	3–A16	2.240	WIRE, SPLG #2 CYL. (*KIT1) (AC–DELCO #350V)	96–99	F (L36)	1	12192351
	3–A16	2.240	WIRE, SPLG #2 CYL (STYLE 30RR–L, 7MM LEAD) (30"LONG) (*KIT1) (AC–DELCO #352A)	00	F (L36)	1	12192397
	3–A16	2.240	WIRE, SPLG #2 CYL (STYLE 30RR–L., 7MM LEAD) (30"LONG) (*KIT1) (2.239) (AC–DELCO #354G)	01–02	F (L36)	1	12192479
	3–A16	2.240	WIRE, SPLG #3 CYL (*KIT1) (AC–DELCO #350T)	96–99	F (L36)	1	12192349
	3–A16	2.240	WIRE, SPLG #3 CYL (STYLE 22RR–L, 7MM) (22" LONG) (*KIT1) (AC–DELCO #351W) ...	00	F (L36)	1	12192395
	3–A16	2.240	WIRE, SPLG #3 CYL (STYLE 22RR–L, 7MM) (22" LONG) (*KIT1) (2.239) (AC–DELCO #354C)	01–02	F (L36)	1	12192475
	3–A16	2.240	WIRE, SPLG #4 CYL (STYLE 34EEE, 7MM LEAD.) (34"LONG) (*KIT1) (AC–DELCO #350W) ...	96–99	F (L36)	1	12192352
	3–A16	2.240	WIRE, SPLG #4 CYL (STYLE 34RR–L, 7MM LEAD) (34" LONG) (*KIT1) (AC–DELCO #352B)	00	F (L36)	1	12192398
	3–A16	2.240	WIRE, SPLG #4 CYL (STYLE 34RR–L, 7MM LEAD) (34" LONG) (*KIT1) (2.239) (AC–DELCO #354H)	01–02	F (L36)	1	12192480
	3–A16	2.240	WIRE, SPLG #5 CYL (*KIT1) (AC–DELCO #350S)	96–99	F (L36)	1	12192348
	3–A16	2.240	WIRE, SPLG #5 CYL (STYLE 28RR–L, 7MM LEAD) (28" LONG) (*KIT1) (AC–DELCO #351Y)	00	F (L36)	1	12192396
	3–A16	2.240	WIRE, SPLG #5 CYL (STYLE 28RR–L, 7MM LEAD) (28" LONG) (28"LONG STYLE RR–L) (7MM LEAD) (*KIT1) (2.239) (AC–DELCO #354F)	01–02	F (L36)	1	12192478
	3–A16	2.240	WIRE, SPLG #6 CYL (40" LG) (STYLE 40AA–L, 7MM LEAD.) (*KIT1) (AC–DELCO #341C)	96–99	F (L36)	1	12173408
	3–A16	2.240	WIRE, SPLG #6 CYL (STYLE 38RR–L, 7MM LEAD) (38" LONG) (38'LONG) (*KIT1) (AC–DELCO #352C)	00	F (L36)	1	12192399
	3–A16	2.240	WIRE, SPLG #6 CYL (STYLE 38RR–L, 7MM LEAD) (38" LONG) (38"LONG STYLE RR–L) (7MM LEAD) (*KIT1) (2.239) (AC–DELCO #354J)	01–02	F (L36)	1	12192481
3.	3–A20	2.270	SPARK PLUG, (AC–DELCO #41–921)	96–02	F (L36)	6	25161444

cardiagn.com

	3–A20	2.270	SPARK PLUG, (AC–DELCO #14)	96–02	F (L36)	AR	25332828
	3–A20	2.270	SPARK PLUG, (AC–DELCO #41–101)	02	F (L36)	6	12568387
4.	3–B4	2.383	SENSOR, KNOCK (AC–DELCO #213–297)	96–02	F (L36)	2	10456215
5.		N.S.	MODULE, ELEK IGN CONT ((W/COIL) (SEE "COIL & MODULE/IGNITION"ILLUSTRATI ON IN GRP 2.000 FOR DETAILED VIEW)				
6.	3–A9	2.041	STUD, STRTR (OUTBOARD) (2.042)	96–02	F (L36)	1	24503612
7.	3–A9	2.042	BOLT, STRTR (M10X1.5X118) (#1 INBOARD HOLE)	96–02	F	1	14086077
8.	3–A9	2.041	STARTER, (REMAN) (NO CPS) (AC–DELCO #323–501)	96–97	F (L36)	1	10465309
	3–A9	2.041	STARTER, (REMAN) (NO CPS) (AC–DELCO #323–1191)	98–01	F (L36)	1	10465421
	3–A9	2.041	STARTER, (REMAN) (NO CPS) (AC–DELCO #323–1437)	02	F (L36)	1	10465525
9.	3–M26	0.206	STUD, ENG FRT CVR (CR/SHF POSN SEN SHLD) (HEX W/65 OD X .06 THK WA, 5/16–18X3.07 W2.6 THD)	96–02	F (L36)	1	24504718
	3–M26	0.206	STUD, ENG FRT CVR (THRU FRT TO BLK) (HEX W/.65 OD X .06 THK WA, 5/16–18X1.53 W/1.1 THD)	96–02	F (L36)	2	24504717
10.	3–B4	2.383	SENSOR, CR/SHF POSN (4 PIN) (AC–DELCO #213–151)	96–02	F (L36)	1	10456161
11.	3–B4	2.383	SENSOR, CM/SHF POSN (AC–DELCO #213–346)	96–02	F (L36)	1	10456148
12.	3–B4	2.383	BOLT, CM/SHF POSN SEN (HEX–W/FLAT WA, 1/4–20X.69, .55 THD, 5 OD, 300M, PL, W/ADHES) (AC–DELCO #25526395)	96–02	F (L36)	1	25526395
13.		8.900	BOLT, HFH M8X1.25X75, 33.2 THD, 9.8 PO (GEN)	96–02	F	1	10130949
14.		8.900	BOLT, HFH M10X1.5X75 10.9PZOR (GEN)	96–02	F	1	11508540
15.	3–A25	2.275	GENERATOR, (REMAN) (AC–DELCO #321–1423)	96–97	F (L36, K68)	1	10464075
	3–A25	2.275	GENERATOR, (REMAN) (AC–DELCO #321–1766)	98	F (L36, K68)	1	10464418
	3–A25	2.275	GENERATOR, (REMAN) (AC–DELCO #321–1753)	99	F (L36, K68)	1	10464409
	3–A25	2.275	GENERATOR, (REMAN) (AC–DELCO #321–1797)	00–02	F (L36, K68)	1	10464437
16.		8.917	NUT, HFH, M8X1.25, 17.9 OD, 738 THK, 13MM HEX, 10, ZF (ELEK ICM BRKT) (8.915) (AC–DELCO #11514596)	96–02	F	2	11514596

cardiagn.com

1.	3-A16	2.239	WIRE KIT, SPLG (INCLS 2: SPLG WIRES #1, 2, 3, 4, 5, 6) (AC-DELCO #706X)	96-99	F (L36)	1	12192355
	3-A16	2.239	WIRE KIT, SPLG (INCLS 2: SPLG WIRES #1, 2, 3, 4, 5, 6) (AC-DELCO #746CC)	00-02	F (L36)	1	12192469

RPO DEFINITIONS
ABN - SENSOR OXYGEN NON-HEATED
C41 - HEATER,OUTSIDE AIR,WITH FAN AND DEFROSTER
C60 - AIR CONDITIONER,FRONT,MANUAL CONTROLS
K68 - GENERATOR,105 AMPERE
L36 - ENGINE GAS, 6 CYL, 3.8K, MFI, V6, HO (ERV6 SERIES)
M30 - TRANSMISSION,AUTOMATIC 4 SPEED,4L60E,ELECTRONIC
M49 - TRANSMISSION MAN 5 SPD, BORG WARNER, 77MM, 3.75 1ST, .76 5TH, O/D
UD6 - ALARM,EXHAUST TEMPERATURE(EXPORT)

cardiagn.com

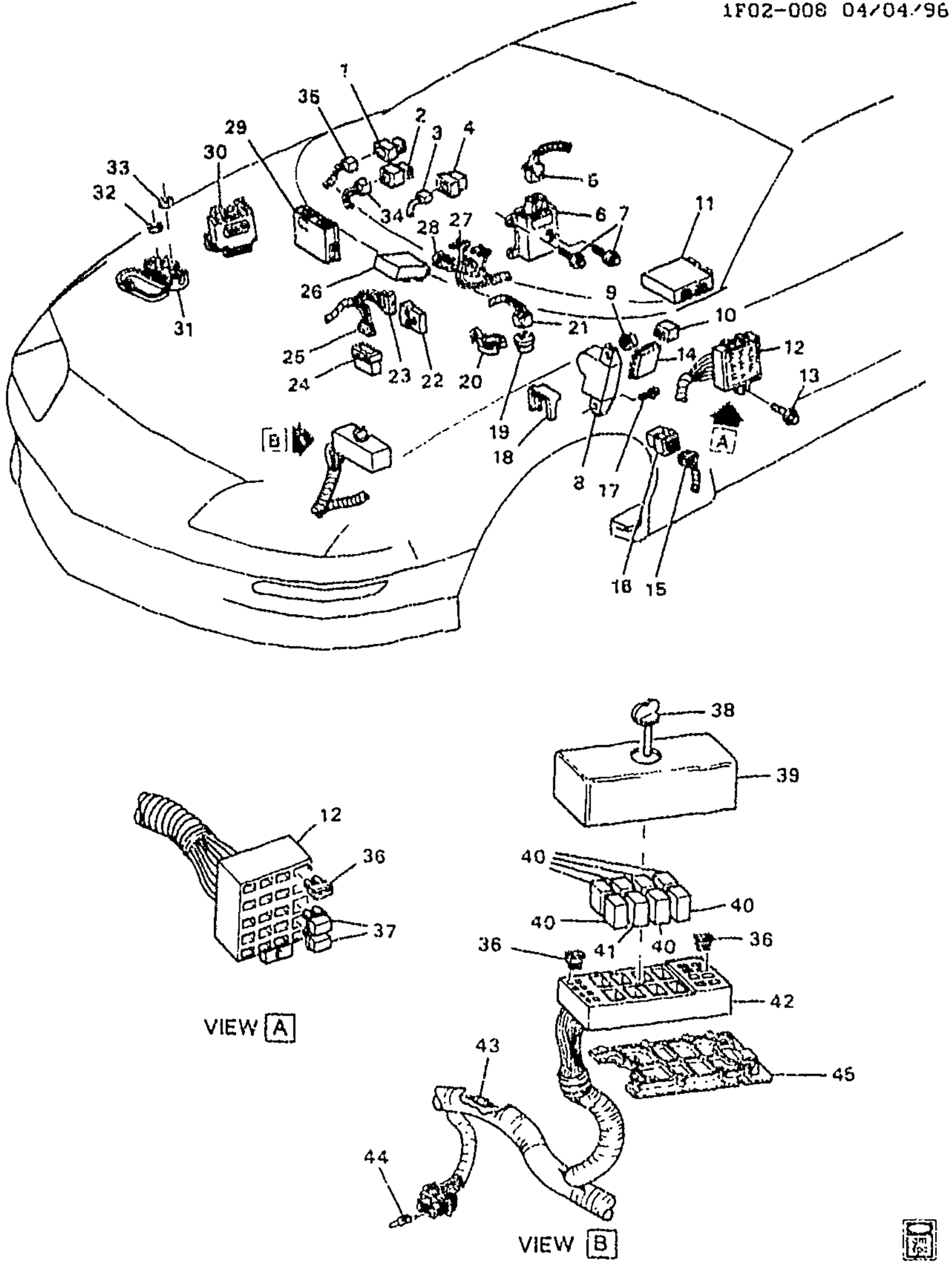

1F02-008

1993 F RELAYS

1.	3-A14	2.195	RELAY, THEFT DTRNT (STARTER ENABLE) (BLACK) (5-WAY M) (USED W/CONNECTOR 15306045) (W/OUT BRKTS) (9.277) (AC-DELCO #15-8719)	93 F	1	12193601

cardiagn.com

2.	3–N20	12.243	**RELAY**, R/CMPT LID REL (BLACK) (5–WAY M) (USED W/CONNECTOR 15306045) (W/OUT BRKTS) (9.277) (AC–DELCO #15–8719)	93	F	1	12193601
3.	3–N15	9.650	**CONNECTOR**, RDO SPKR AMPF RLY (BLACK) (6–WAY F) (W/O LEADS) (3.900)	93	F	1	12110541
4.	3–N15	9.650	**RELAY**, RDO SPKR AMPF (BLACK) (5–WAY M) (USED W/CONNECTOR 15306045) (W/OUT BRKTS) (9.277) (AC–DELCO #15–8719)	93	F	1	12193601
	3–C4	2.510	**RELAY**, RDO SPKR AMPF (BLACK) (5–WAY M) (USED W/CONNECTOR 15306045) (W/OUT BRKTS) (9.277) (AC–DELCO #15–8719)	93	F (U82)	1	12193601
5.		N.S.	**CONNECTOR**, MDL–THEFT DTRNT		.....		
6.	3–A14	2.195	**MODULE**, THEFT DTRNT (FOR PASS KEY SYSTEM)	93	F	1	16215659
7.		8.900	**BOLT/SCREW**, HWH W/FL WA M4.2X1.41X20, 6010M, 7253M, 12.5 OD, DOG PT (THEFT DTRNT MDL) (8.977)	93	.....	2	11509709
8.		N.S.	CONVENIENCE CENTER		.....		
9.	3–C18	2.575	**FLASHER**, HAZARD LP (1 1/2" DIA) (6 LP FLSHR) (AC–DELCO #SF552) (1 1/2" DIA, 6 LP FISHER)	93	F	1	491391
10.	3–C27	2.815	**RELAY**, HORN (LITTLE FUSE MANIF) (AC–DELCO #D1776) ..	93	F	1	25523703
11.	3–N12	4.720	**MODULE**, ELEK BRK CONT (REMAN) (SEE BRAKE ELECTRICAL SYSTEM/ANTI–LOCK ILLUSTRATION IN GRP 4.000 FOR DETAILS.)	93	F	1	16171460
12.		N.S.	**BLOCK**, FUSE		.....		
13.		8.900	**BOLT/SCREW**, HWH W/FL WA M4.2X1.41X20, 6010M, 7253M, 12.5 OD, DOG PT (I/P WRG HARN FUSE BLK) (8.977)	93	.....	1	11509709
14.	3–A14	2.195	**ALARM**, ST BELT & IGN KEY & LPS (CHIME WIRING SIGNAL) ..	93	F (2ND DES)	1	14101255
	3–N18	9.765	**ALARM**, ST BELT & IGN KEY & LPS (CHIME WIRING SIGNAL) (2.195)	93	F (2ND DES)	1	14101255
	3–A14	2.195	**ALARM**, ST BELT & IGN KEY & LPS (TONE WIRING SIGNAL)	93	F (1ST DES)	1	10063474
	3–N18	9.765	**ALARM**, ST BELT & IGN KEY & LPS (TONE WIRING SIGNAL) (2.195)	93	F (1ST DES)	1	10063474
15.	3–N10	3.900	**CONNECTOR**, RLY–F/PMP (BLACK) (6–WAY F, W/O LEADS)	93	F	1	12110541

cardiagn.com

16.	3–N10	3.900	**RELAY**, F/PMP (BLACK) (5–WAY M) (USED W/CONNECTOR 15306045) (W/OUT BRKTS) (9.277) (AC–DELCO #15–8719)	93	F	1	12193601
17.		8.977	**BOLT**, SCR HEX W/FLAT WA 12 DIA TYPE AB (I/P WRG CONVENIENCE CTR)	93		2	11509374
18.	3–C15	2.559	**RETAINER**, FWD LP WRG HARN	93	F	1	12052061
19.	3–C28	2.892	**FLASHER**, T/SIG LP (YELLOW) (2 LP FLSHR) (AC–DELCO #SF224)	93	F (EXC T90)	1	10041074
	3–C28	2.892	**FLASHER**, T/SIG LP (AC–DELCO #11515735)	93	F (T90) (EXPORT)	1	11515735
20.	3–C28	2.892	**CLIP**, T/SIG LP FLSHR	93	F	1	25534019
21.	3 -C28	2.892	**CONNECTOR**, FLSHR–T/SIG LP (BLACK) (2–WAY F) (W/LEADS) (2.575) (AC–DELCO #PT663)	93	F	1	12126032
22.	3–N19	10.777	**MODULE**, P/W CONT (EXPRESS DOWN)	93	F	1	12182126
23.	3–N19	10.777	**CONNECTOR**, MDL–P/W CONT (5–WAY F) (9.778) (AC–DELCO #PT531)	93	F	1	12117399
24.	3–N18	10.485	**MODULE**, RETAINED ACRSY PWR	93	F	1	12130089
25.	3–N18	10.485	**CONNECTOR**, MDL–RETAINED ACSRY PWR (BLACK) (7–WAY F) (W/LEADS) (10.163) (AC–DELCO #PT547)	93	F	1	12125635
26.	3–B28	2.485	**MODULE**, HDLP AUTO CONT (LESS BRKT & BOLTS)	93	F (T61) (EXPORT)	1	10096712
27.	3–B28	2.485	**CONNECTOR**, MDL–DAYTIME RUNNING LP CONT (BLACK) (8–WAY F W/LEADS, 7–12GA & 4–18GA AS REQ) (2.535) (AC–DELCO #PT1346)	93	F (T61)	1	15306189
28.	3–B28	2.485	**CONNECTOR**, MDL–DAYTIME RUNNING LP CONT (BLUE) (8–WAY F) (W/LEADS) (2.535) (AC–DELCO #PT266)	93	F (T61)	1	12101875
29.	3–N26	14.865	**MODULE**, INFL RST DIAGN ENGY RESV (REMAN) (SEE INFLATABLE RESTRAINT SYSTEM ILLUSTRATION IN GRP 14.000 FOR DETAILS.) (AC–DELCO #16150340) (FOR PROD #16139070, SEE PART #ON LBL)	93	F (AK5) (1ST DES)	1	16150340
	3–N26	14.865	**MODULE**, INFL RST DIAGN ENGY RESV (REMAN) (SEE INFLATABLE RESTRAINT SYSTEM ILLUSTRATION IN GRP 14.000 FOR DETAILS.) (FOR PROD #16193430, SEE PART #ON LBL)	93	F (AK5) (2ND DES)	1	16176558

cardiagn.com

30.	3-N3	3.670	**MODULE**, PWRT CONT (REMAN) (SEE E.C.M. MODULE & WIRING HARN ILLUSTRATION IN GRP 3.000 FOR DETAILS.) (AC-DELCO #16159278)	93	F (LT1)	1	16159278
	3-N3	3.670	**MODULE**, PWRT CONT (REMAN) (INCLS UNPROGRAMMED EPROM) (SEE E.C.M. MODULE & WIRING HARN ILLUSTRATION IN GRP 3.000 FOR DETAILS.) (CODES BDLM, BDLN, BDLP) ...	93	F (L32)	1	16172693
31.	3-B27	2.483	**BLOCK**, FWD LP WRG HARN JUNC (REMOTE ACCESS)	93	F	1	12136586
32.		8.915	**NUT**, HEX M6X1X5.5 9 PEOR (FWD LP WRG HARN J/BLK)	93	.....	1	11507095
33.		8.917	**NUT**, HFH M6X1X6.5 ZOR 9 (BAT POS CBL)	93	.....	1	3530297
34.	3-N20	12.243	**CONNECTOR**, RLY-R/CMPT LID REL (BLACK) (6-WAY F) (W/O LEADS) (3.900)	93	F	1	12110541
35.	3-A14	2.195	**CONNECTOR**, RLY-THEFT DTRNT (BLACK) (6-WAY F) (W/O LEADS) (3.900)	93	F	1	12110541
36.		8.965	**FUSE**, MINI 5AMP TAN	93	.....	AR	12004005
		8.965	**FUSE**, AUTOFUSE 7.5 AMP	93	.....	AR	12004006
		8.965	**FUSE**, AUTOFUSE 10 AMP (AC-DELCO #12004007)	93	.....	AR	12004007
		8.965	**FUSE**, AUTOFUSE 15 AMP (AC-DELCO #12004008)	93	.....	AR	12004008
		8.965	**FUSE**, AUTOFUSE 20 AMP	93	.....	AR	12004009
37.		8.965	**BREAKER**, CIRC (12V-30A) (I/P WRG HARN FUSE BLK CIRC) ...	93	....	2	1252240
38.	3-B27	2.483	**RETAINER**, MULTIUSE RLY CVR (2.559)	93	F	1	1621000
39.	3-B27	2.483	**COVER**, MULTIUSE RLY & FUSE (ALSO ORDER 12124484 LBL FOR 1993 APP) (INCLS RET, SEAL, LBL&FUSE EXTRACTOR) .	93	F (1ST DES)	1	12124983
	3-B27	2.483	**COVER**, MULTIUSE RLY & FUSE (HAS LBL W/12124607)	93	F (2ND DES)	1	12124777
	3-B27	2.483	**COVER**, MULTIUSE RLY & FUSE (LWR-UNDER CONV CTR) (INCLS RETS TO HOLD CONN CTR TO BRKT)	93	F	1	12162522
40.	3-C4	2.510	**RELAY**, FOG LP (BLACK) (5-WAY) (9.277) (AC-DELCO #15-8426)	93	F	1	14100455
	3-M26	1.055	**RELAY**, FAN CONT (BLACK) (5-WAY) (9 277) (AC-DELCO #15-8426)	93	F	AR	14100455
	3-N3	3.670	**RELAY**, SECD AIR INJN PUMP (BLACK) (5-WAY) (9.277) (AC-DELCO #15-8426)	93	F	1	14100455
	3-N14	9.277	**RELAY**, BLO MOT (BLACK) (5-WAY) (AC-DELCO #15-8426)	93	F	1	14100455

cardiagn.com

	3-N14	9.277	RELAY, A/C CMPR (BLACK) (5-WAY) (AC-DELCO #15-8426)	93	F	1	14100455
	3-C4	2.510	RELAY, ENG COOL LVL IND (BLACK) (5-WAY) (9.277) (AC-DELCO #15-8426)	93	F (C60)	1	14100455
	3-C4	2.510	RELAY, ENG COOL LVL IND (BLACK) (5-WAY) (9.277) (AC-DELCO #15-8426)	93	F (LT1, C41)	1	14100455
	3-C21	2.694	RELAY, RR FOG LP (BLACK) (5-WAY) (9.277) (AC-DELCO #15-8426)	93	F (T39) (EXPORT)	1	14100455
	3-N14	9.277	RELAY, A/C CMPR (BLACK) (5-WAY M) (USED W/CONNECTOR 15306045) (W/OUT BRKTS) (AC-DELCO #15-8719)	93	F87 (Z49) (EXPORT)	3	12193601
41.	3-N12	4.720	RELAY, ELEK BRK CONT (MINI) (AC-DELCO #12088595)	93	F	1	12088595
42.	3-B27	2.483	BLOCK, FWD LP WRG HARN JUNC (FUSE & RELAY)	93	F	1	12162539
43.	3-C4	2.510	DIODE, M/FUNC (1 AMP) (AED05021)	93	F	1	12112421
	3-C4	2.510	DIODE, M/FUNC (3 AMP) (AED5051)	93	F	1	12112422
44.	3-C8	2.530	PLUG, WRG HARN CONN (GRAY) (USED IN ENG WRG HARN & FWD LP WRG HARN)	93	F	1	12065266
45.	3-B27	2.483	COVER, MULTIUSE RLY & FUSE	93	F	1	12162522

RPO DEFINITIONS

AK5 – RESTRAINT SYSTEM,FRONT SEAT,INFLATABLE,DRIVER AND PASSENGER
C41 – HEATER,OUTSIDE AIR,WITH FAN AND DEFROSTER
C60 – AIR CONDITIONER,FRONT,MANUAL CONTROLS
LT1 – ENGINE-GAS 8 CYL, 5.7L(5.7P),MFI,HO
L32 – ENGINE,3.4L,V6,(3.4S),SFI,OHV
T39 – LAMP,TURN SIGNAL,AUXILIARY(EXPORT)
T61 – LIGHTING,DAYTIME RUNNING
T90 – LAMP,SIGNALING AND MARKER(EXPORT)
U82 – SPEAKER SYSTEM 3, DUAL DR MTD, RR PKG SHELF
Z49 – MANDATORY CANADIAN BASE EQUIPMENT MODIFICATIONS(CANADIAN)

cardiagn.com

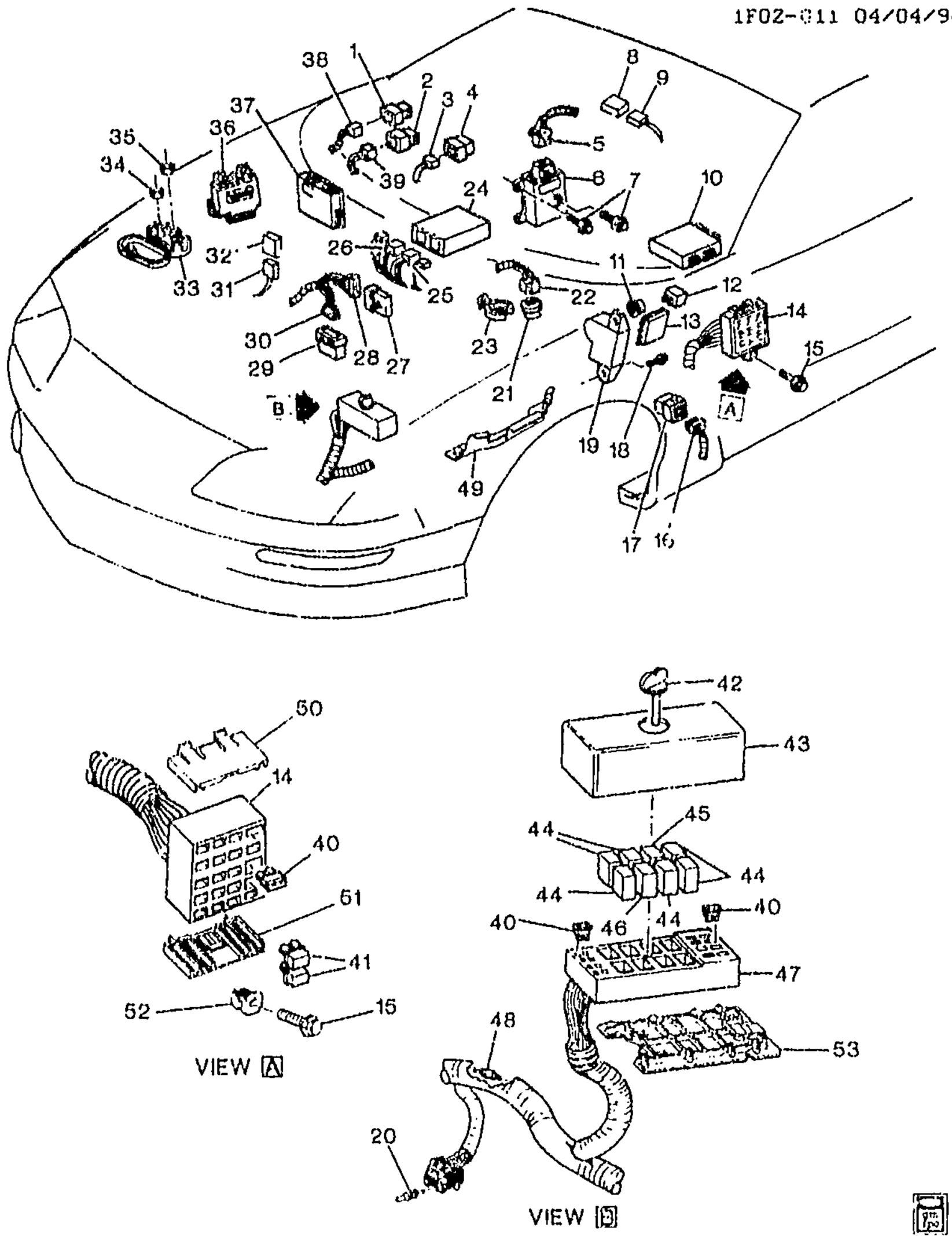

1F02-011

1994-1996 F RELAYS

1.	3-A14	2.195	RELAY, THEFT DTRNT (STARTER ENABLE) (BLACK) (5-WAY M) (USED W/CONNECTOR	94-96 F	1 12193601

cardiagn.com

2.	3-N20	12.243	RELAY, R/CMPT LID REL (BLACK) (5-WAY M) (USED W/CONNECTOR 15306045) (W/OUT BRKTS) (9.277) (AC-DELCO #15-8719)	94-96	F	1	12193601
3.	3-N15	9.650	CONNECTOR, RDO SPKR AMPF RLY (BLACK) (6-WAY F) (W/O LEADS) (3.900)	94-96	F	1	12110541
4.	3-N15	9.650	RELAY, RDO (BLACK) (5-WAY M) (USED W/CONNECTOR 15306045) (W/OUT BRKTS) (9.277) (AC-DELCO #15-8719)	94-96	F87	1	12193601
5.		N.S.	CONNECTOR, MDL-THEFT DTRNT		.....		
6.	3-A14	2.195	MODULE, THEFT DTRNT (FOR PASS KEY SYSTEM)	94-96	F	1	16215659
7.		8.977	BOLT, SCR HEX W/FLAT WA 12 DIA TYPE AB (THEFT DTRNT MDL)	94-96	F	2	11509374
8.	3-N14	9.277	RELAY, BLO MOT (BLACK) (5-WAY M) (USED W/CONNECTOR 15306045) (W/OUT BRKTS) (AC-DELCO #15-8719)	94-96	F	1	12193601
	3-N14	8.855	RELAY, BLO MOT (BLACK) (5-WAY M) (USED W/CONNECTOR 15306045) (W/OUT BRKTS) (9.277) (AC-DELCO #15-8719)	94-96	F	1	12193601
9.	3-N14	8.855	CONNECTOR, RLY-BLO MOT (BLACK) (6-WAY F) (W/O LEADS) (3.900)	94-96	F	1	12110541
10.	3-N12	4.720	MODULE, ELEK BRK CONT (SEE BRAKE ELECTRICAL SYSTEM/ANTI-LOCK ILLUSTRATION IN GRP 4.000 FOR DETAILS.) (AC-DELCO #16220631)	96	F (EXC NW9)	1	16220631
	3-N12	4.720	MODULE, ELEK BRK & TRACT CONT (SEE BRAKE ELECTRICAL SYSTEM/ANTI-LOCK ILLUSTRATION IN GRP 4.000 FOR DETAILS.)	94-95	F (NW9)	1	16199451
	3-N12	4.720	MODULE, ELEK BRK & TRACT CONT (SEE BRAKE ELECTRICAL SYSTEM/ANTI-LOCK ILLUSTRATION IN GRP 4.000 FOR DETAILS.) (AC-DELCO #16226471)	96	F (NW9)	1	16226471
		N.S.	MODULE, ELEK BRK CONT (REMAN) (SEE BRAKE ELECTRICAL SYSTEM/ANTI-LOCK ILLUSTRATION IN GRP 4.000 FOR DETAILS.)	96	....		

cardiagn.com

		N.S.	**MODULE**, ELEK BRK & TRACT CONT (SEE BRAKE ELECTRICAL SYSTEM/ANTI-LOCK ILLUSTRATION IN GRP 4.000 FOR DETAILS.)	94			
11.	3-C18	2.575	**FLASHER**, HAZARD LP (1 1/2" DIA) (6 LP FLSHR) (AC-DELCO #SF552) (1 1/2" DIA, 6 LP FISHER)	94-96	F	1	491391
12.	3-C27	2.815	**RELAY**, HORN (LITTLE FUSE MANIF) (AC-DELCO #D1776)	94-95	F	1	25523703
	3-C27	2.815	**RELAY**, HORN (BLACK) (5-WAY M) (USED W/CONNECTOR 15306045) (W/OUT BRKTS) (9.277) (AC-DELCO #15-8719)	96	F	1	12193601
13.		N.S.	**ALARM**, ST BELT & IGN KEY & LPS	96			
		N.S.	**ALARM**, SPD ALERT & ST BELT & IGN KEY & LPS & T/SIG	96			
	3-A14	2.195	**ALARM**, ST BELT & IGN KEY & LPS	94-95	F (EXC UD4)	1	14101255
	3-N18	9.765	**ALARM**, ST BELT & IGN KEY & LPS (2.195)	94-95	F (EXC UD4)	1	14101255
	3-A14	2.195	**ALARM**, SPD ALERT & ST BELT & IGN KEY & LPS & T/SIG	94-95	F (UD4) (EXPORT)	1	10150318
	3-N18	9.765	**ALARM**, SPD ALERT & ST BELT & IGN KEY & LPS & T/SIG (2.195)	94-95	F (UD4) (EXPORT)	1	10150318
14.	3-B27	2.483	**BLOCK**, FUSE (I/P WRG)	94-96	F	1	12146075
15.		8.900	**BOLT/SCREW**, HWH W/FL WA M4.2X1.41X20, 6010M, 7253M, 12.5 OD, DOG PT (I/P WRG HARN FUSE BLK) (8.977)	94-96		1	11509709
16.	3-N10	3.900	**CONNECTOR**, RLY-F/PMP (BLACK) (6-WAY F) (W/O LEADS)	94-96	F	1	12110541
17.	3-N10	3.900	**RELAY**, F/PMP (BLACK) (5-WAY M) (USED W/CONNECTOR 15306045) (W/OUT BRKTS) (9.277) (AC-DELCO #15-8719)	94-96	F	1	12193601
18.		8.977	**SCREW**, HWH TAP M4.2X1.41X10, 9.2-OD 6010PZOR BLK (I/P WRG HARN CONVENIENCE CTR)	94-96	F	2	11509501
19.	3-B27	2.483	**BLOCK**, I/P WRG HARN JUNC	94-96	F	1	12015999
	3-B27	2.483	**BLOCK**, FUSE (I/P WRG)	94-96	F	1	12146075
20.	3-C8	2.530	**PLUG**, WRG HARN CONN (GRAY) (USED IN ENG WRG HARN & FWD LP WRG HARN)	94-95	F	1	12065266
	3-C8	2.530	**PLUG**, WRG HARN CONN (BLACK) (1-WAY M)	96	F	AR	12059168
21.	3-C28	2.892	**FLASHER**, T/SIG LP (YELLOW) (2 LP FLSHR) (AC-DELCO #SF224)	94-96	F (EXC T90)	1	10041074
	3-C28	2.892	**FLASHER**, T/SIG LP (AC-DELCO #11515735)	94-96	F (T90) (EXPORT)	1	11515735
22.	3-C28	2.892	**CONNECTOR**, FLSHR -T/SIG LP (BLACK) (2-WAY F) (W/LEADS)	94-96	F	1	12126032

cardiagn.com

23.	3-C28	2.892	CLIP, T/SIG LP FLSHR	94-96	F	1	25534019
24.	3-B28	2.485	MODULE, HDLP AUTO CONT (LESS BRKT & BOLTS)	94-96	F (T61) (EXPORT)	1	10098712
25.	3-B28	2.485	CONNECTOR, MDL-DAYTIME RUNNING LP CONT (BLACK) (8-WAY F W/LEADS, 7-12GA & 4-18GA AS REQ) (2.535) (AC-DELCO #PT1346)	94-96	F (T61)	1	15306189
26.	3-B28	2.485	CONNECTOR, MDL-DAYTIME RUNNING LP CONT (BLUE) (8-WAY F) (W/LEADS) (2.535) (AC-DELCO #PT266)	94-96	F (T61)	1	12101875
27.	3-N19	10.777	MODULE, P/W CONT (EXPRESS DOWN)	94-96	F	1	12182126
28.	3-N19	10.777	CONNECTOR, MDL-P/W CONT (5-WAY F) (9.778) (AC-DELCO #PT531)	94-96	F	1	12117399
29.		N.S.	MODULE, RETAINED ACRSY PWR		.....		
31.		N.S.	CONNECTOR, MDL-ENG COOL LVL IND		.....		
32.	3-M27	1.203	MODULE, ENG COOL LVL IND (W/8 WAY CONN, PLUGS INTO HARN)	94-96	F (LT1)	1	12135027
33.	3-B27	2.483	BLOCK, FWD LP WRG HARN JUNC (REMOTE ACCESS)	94-96	F	1	12186586
34.		8.917	NUT, HFH M6X1X6.5 ZOR 9 (FWD LP WRG HARN J/BLK)	94-96	F	1	3530297
35.		8.917	NUT, HFH M6X1X6.5 ZOR 9 (BAT POS CBL)	94-96	F	1	3530297
36.	3-N3	3.670	MODULE, PWRT CONT (REMAN) (CODE BJBH) (SEE P.C.M. MODULE & WIRING HARN ILLUSTRATION IN GRP 3.000 FOR DETAILS.) (AC-DELCO #16196397)	94-95	F (L32, M49)	1	16196397
	3-N3	3.670	MODULE, PWRT CONT (REMAN) (INCLS UNPROGRAMMED EPROM) (SEE P.C.M. MODULE & WIRING HARN ILLUSTRATION IN GRP 3.000 FOR DETAILS.) (AC-DELCO #16184737) (CODES BDML BJPM, BJRM, BNFM)	94-95	F (L32, M30)	1	16184737
	3-N3	3.670	MODULE, PWRT CONT (REMAN) (INCLS UNPROGRAMMED EPROM) (SEE P.C.M. MODULE & WIRING HARN ILLUSTRATION IN GRP 3.000 FOR DETAILS.) (AC-DELCO #16188051) (CODE BDTF, BHZU, BJHJ, BJHK, BJHL, BJHM, BJHN, BJHP, BJHR, BJHS, BKNA)	94-95	F (LT1)	1	16188051

cardiagn.com

	3-N3	3.670	MODULE, PWRT CONT (REMAN) (INCLS UNPROGRAMMED EPROM) (SEE P.C.M. MODULE & WIRING HARN ILLUSTRATION IN GRP 3.000 FOR DETAILS.) (AC-DELCO #16207326)	95-96	F (L36)	1	16207326
	3-N3	3.670	MODULE, PWRT CONT (REMAN) (INCLS UNPROGRAMMED EPROM) (SEE P.C.M. MODULE & WIRING HARN ILLUSTRATION IN GRP 3.000 FOR DETAILS.) (AC-DELCO #16214399)	96	F (LT1)	1	16214399
37.		N.S.	MODULE, INFL RST DIAGN ENGY RESV (REMAN) (SEE INFLATABLE RESTRAINT SYSTEM ILLUSTRATION IN GRP 14.000 FOR DETAILS.)		....		
38.		N.S.	CONNECTOR, RLY-THEFT DTRNT		.....		
39.	3-N20	12.243	CONNECTOR, RLY-R/CMPT LID REL (BLACK) (6-WAY F) (W/O LEADS) (3.900)	94-96	F	1	12110541
40.		8.965	FUSE, MINI 5AMP TAN	94-96	F	AR	12004005
		8.965	FUSE, AUTOFUSE 7.5 AMP	94-96	F	AR	12004006
		8.965	FUSE, AUTOFUSE 10 AMP (AC-DELCO #12004007)	94-96	F	AR	12004007
		8.965	FUSE, AUTOFUSE 15 AMP (AC-DELCO #12004008)	94-96	F	AR	12004008
		8.965	FUSE, AUTOFUSE 20 AMP	94-96	F	AR	12004009
41.		8.965	BREAKER, CIRC (12V-30A) (I/P WRG HARN FUSE BLK CIRC) ...	94-96	F	2	1252240
42.	3-B27	2.483	RETAINER, MULTIUSE RLY CVR (2.559)	94-96	F	1	1621000
43.	3-B27	2.483	COVER, MULTIUSE RLY & FUSE (INCLS RET, SEAL, LBL&FUSE EXTRACTOR)	94	F	1	12124983
	3-B27	2.483	COVER, MULTIUSE RLY & FUSE (INCL RET, SEAL, LBL & FUSE EXTRACTOR)	95	F (LT1, C41, C60)	1	12162606
	3-B27	2.483	COVER, MULTIUSE RLY & FUSE (INCL RET, SEAL, LBL & FUSE EXTRACTOR)	95	F (L32, C41 C60)	1	12162606
	3-B27	2.483	COVER, MULTIUSE RLY & FUSE (INCL RET, SEAL, LBL & FUSE EXTRACTOR)	95	F (L36, C60)	1	12162606
	3-B27	2.483	COVER, MULTIUSE RLY & FUSE .	96	F	1	12191560
	3-B27	2.483	COVER, MULTIUSE RLY & FUSE (LWR-UNDER CONV CTR) (INCLS RETS TO HOLD CONN CTR TO BRKT)	94-96	F	1	12162522
44.	3-C4	2.510	RELAY, FOG LP (BLACK) (5-WAY) (9.277) (AC-DELCO #15-8426)	94-96	F	1	14100455
	3-M26	1.055	RELAY, FAN CONT (BLACK) (5-WAY) (9.277) (AC-DELCO #15-8426)	94-96	F	AR	14100455

cardiaqn.com

	3-M26	1.055	RELAY, FAN CONT (BLACK) (5-WAY M) (USED W/CONNECTOR 15306045) (W/OUT BRKTS) (9.277) (AC-DELCO #15-8719)	94	F	1	12193601
	3-N3	3.670	RELAY, SECD AIR INJN PUMP (BLACK) (5-WAY) (9 277) (AC-DELCO #15-8426)	94-96	F	1	14100455
	3-N14	9.277	RELAY, A/C CMPR (BLACK) (5-WAY) (AC-DELCO #15-8426)	94-96	F	1	14100455
	3-N14	9.277	RELAY, A/C CMPR (BLACK) (5-WAY M) (USED W/CONNECTOR 15306045) (W/OUT BRKTS) (AC-DELCO #15-8719)	94	F	3	12193601
	3-C21	2.694	RELAY, RR FOG LP (BLACK) (5-WAY) (9.277) (AC-DELCO #15-8426)	94-96	F (EXPORT)	1	14100455
45.	3-N3	3.440	RELAY, THROT CONT (MINI) (4.720) (AC-DELCO #12088595)	94-96	F	1	12088595
46.	3-N12	4.720	RELAY, ELEK BRK CONT	96	F	4	12135197
	3-N12	4.720	RELAY, ELEK BRK CONT (MINI) (AC-DELCO #12088595)	94-95	F	1	12088595
47.	3-B27	2.483	BLOCK, FWD LP WRG HARN JUNC (& MULTIUSE RLY) (FUSE & RELAY)	94-96	F	1	12162539
48.	3-C4	2.510	DIODE, M/FUNC (1 AMP) (AED05021)	94-96	F	1	12112421
	3-C4	2.510	DIODE, M/FUNC (3 AMP) (AED5051)	94-96	F	1	12112422
49.	3-C15	2.559	BRACKET, FWD LP WRG HARN (ON LFT SI RL)	94-96	F	1	10250126
		8.950	RETAINER, FITS .250 HOLE, 1.01LG.700-OD NYLON BLACK (FWD LP WRG HARN BRKT)	94-96	F	2	10121502
50.	3-B27	2.483	BRACKET, FUSE BLK RET (UPPER)	94-96	F	1	12129299
51.	3-B27	2.483	BRACKET, FUSE BLK RET (LOWER)	94-96	F	1	12129298
52.	3-B27	2.483	NUT, I/P WRG HARN FUSE BLK BRKT (M4.2X1.41) (PUSH-IN FOR 12MM SQ HOLE) (10.252) ..	94-96	F	5	17988488
53.	3-B27	2.483	COVER, MULTIUSE RLY & FUSE .	94-96	F	1	12162522

RPO DEFINITIONS
C41 -- HEATER,OUTSIDE AIR,WITH FAN AND DEFROSTER
C60 – AIR CONDITIONER,FRONT,MANUAL CONTROLS
LT1 – ENGINE--GAS, 8 CYL, 5.7L(5.7P),MFI HO
L32 – ENGINE,3.4L,V6,(3.4S),SFI,OHV
L36 – ENGINE GAS, 6 CYL, 3.8K, MFI, V6, HO (ERV6 SERIES)
M30 – TRANSMISSION,AUTOMATIC 4 SPEED,4L60E ELECTRONIC
M49 – TRANSMISSION MAN 5 SPD, BORG WARNER, 77MM, 3.75 1ST, .76 5TH, O/D
NW9 – TRACTION CONTROL ELECTRONIC
T61 – LIGHTING,DAYTIME RUNNING

cardiagn.com

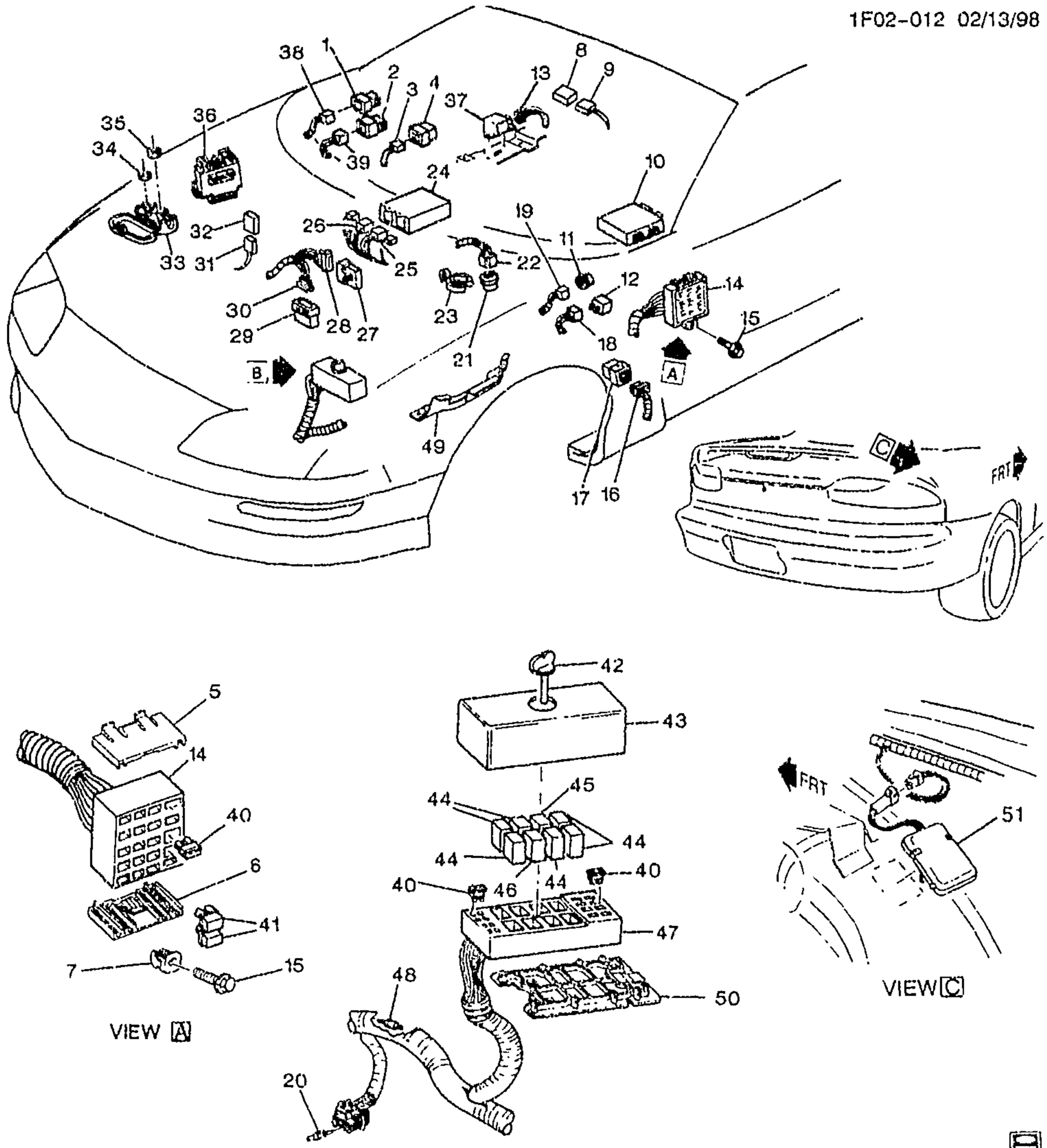

1F02-012

1997-1999 F RELAYS

1.	3-A14	2.195	RELAY, THEFT DTRNT (STARTER ENABLE) (BLACK) (5-WAY M) (USED W/CONNECTOR 15306045) W/OUT BRKTS)	97-99 F (UA6)	1	12193601

cardiagn.com

2.	3-N20	12.243	**RELAY**, R/CMPT LID REL (BLACK) (5-WAY M) (USED W/CONNECTOR 15306045) (W/OUT BRKTS) (9.277) (AC-DELCO #15-8719)	97	F	1	12193601
	3-N20	12.243	**RELAY**, R/CMPT LID REL (5-TERMINAL) (9.277) (AC-DELCO #15-8721)	98-99	F	1	12177233
3.	3-N15	9.650	**CONNECTOR**, RDO SPKR AMPF RLY (BLACK) (6-WAY F) (W/O LEADS) (3.900)	97-99	F	1	12110541
4.	3-N15	9.650	**RELAY**, RDO (BLACK) (5-WAY M) (USED W/CONNECTOR 15306045) (W/OUT BRKTS) (9.277) (AC-DELCO #15-8719)	97	F87	1	12193601
	3-A14	2.195	**RELAY**, THEFT DTRNT (STARTER ENABLE) (BLACK) (5-WAY M) (USED W/CONNECTOR 15306045) (W/OUT BRKTS) (9.277) (AC-DELCO #15-8719)	98-99	F (UA6)	1	12193601
5.	3-B27	2.483	**BRACKET**, FUSE BLK RET (UPPER)	97-99	F	1	12129299
6.	3-B27	2.483	**BRACKET**, FUSE BLK RET (LOWER)	97-99	F	1	12129298
7.	3-B27	2.483	**NUT**, I/P WRG HARN FUSE BLK BRKT (M4.2X1.41) (PUSH-IN FOR 12MM SQ HOLE) (10.252) ..	97-99	F	5	17988488
8.	3-N14	9.277	**RELAY**, BLO MOT (BLACK) (5-WAY M) (USED W/CONNECTOR 15306045) (W/OUT BRKTS) (AC-DELCO #15-8719)	97-99	F	1	12193601
	3-N14	8.855	**RELAY**, BLO MOT (BLACK) (5-WAY M) (USED W/CONNECTOR 15306045) (W/OUT BRKTS) (9.277) (AC-DELCO #15-8719)	97-99	F	1	12193601
	3-N14	9.277	**RELAY**, BLO MOT (5-TERMINAL) (AC-DELCO #15-8721)	98-99	F	1	12177233
9.	3-N14	8.855	**CONNECTOR**, RLY-BLO MOT (BLACK) (6-WAY F) (W/O LEADS) (3.900)	97-99	F	1	12110541
10.	3-N12	4.720	**MODULE**, ELEK BRK CONT (SEE BRAKE ELECTRICAL SYSTEM/ANTI-LOCK ILLUSTRATIONS IN GRP 4.000 FOR DETAILS.) (AC-DELCO #16220631)	97	F (EXC NW9)	1	16220631
	3-N12	4.720	**MODULE**, ELEK BRK & TRACT CONT (SEE BRAKE ELECTRICAL SYSTEM/ANTI-LOCK ILLUSTRATION IN GRP 4.000 FOR DETAILS.)	97	F (LT1, NW9)	1	16220641
	3-N12	4.720	**MODULE KIT**, ELEK BRK CONT (SEE BRAKE ELECTRICAL SYSTEM/ANTI-LOCK ILLUSTRATION IN GRP 4.000	98	F (LS1, NW9)	1	12453253

cardiagn.com

	3-N12	4.720	**MODULE KIT**, ELEK BRK CONT (SEE BRAKE ELECTRICAL SYSTEM/ANTI-LOCK ILLUSTRATION IN GRP 4.000 FOR DETAILS.)	98	F (EXC NW9)	1	12453254
	3-N12	4.720	**MODULE KIT**, ELEK BRK CONT (SEE BRAKE ELECTRICAL SYSTEM/ANTI-LOCK ILLUSTRATION IN GRP 4.000 FOR DETAILS.) (AC-DELCO #12457656)	99	F (EXC NW9)	1	12457656
	3-N12	4.720	**MODULE KIT**, ELEK BRK CONT (W/TRACT CONT) (SEE BRAKE ELECTRICAL SYSTEM/ANTI-LOCK ILLUSTRATION IN GRP 4.000 FOR DETAILS.)	99	F (L36, NW9)	1	12457655
	3-N12	4.720	**MODULE KIT**, ELEK BRK CONT (W/TRACTION CONT) (SEE BRAKE ELECTRICAL SYSTEM/ANTI-LOCK ILLUSTRATION IN GRP 4.000 FOR DETAILS.)	99	F (LS1, NW9)	1	12457657
11.	3-C18	2.575	**FLASHER**, HAZARD LP (1 1/2" DIA) (6 LP FLSHR) (AC-DELCO #SF552) (1 1/2" DIA, 6 LP FISHER)	97-99	F	1	491391
12.	3-C27	2.815	**RELAY**, HORN (BLACK) (5-WAY M) (USED W/CONNECTOR 15306045) (W/OUT BRKTS) (9.277) (AC-DELCO #15-8719)	97	F	1	12193601
	3-C27	2.815	**RELAY**, HORN (GRAY) (4-WAY) (9.277) (AC-DELCO #15-8571)	98-99	F	1	12088567
	3-C27	2.815	**RELAY**, HORN (OFF BLOWER) (5-TERMINAL) (9.277) (AC-DELCO #15-8721)	97	F67	1	12177233
13.	3-N26	14.865	**CONNECTOR**, SEN--INFL RST ARMING (7-WAY F, W/LEADS) ..	97-99	... .	1	12126037
14.	3--B27	2.483	**BLOCK**, FUSE (I/P WRG)	97-99	F	1	12146075
15.		8.900	**BOLT/SCREW**, HWH W/FL WA M4.2X1.41X20, 6010M, 7253M, 12.5 OD, DOG PT (I/P WRG HARN FUSE BLK) (8.977)	97-99	.....	1	11509709
16.	3--N10	3.900	**CONNECTOR**, RLY--F/PMP (TWO 12GA AND THREE 14GA WIRES) (8.855) (AC-DELCO #PT1205)	97-99	F	1	15306045
17.	3--N10	3.900	**RELAY**, F/PMP (BLACK) (5-WAY M) (USED W/CONNECTOR 15306045) (W/OUT BRKTS) (9.277) (AC-DELCO #15-8719)	97	F	1	12193601
	3-N10	3.900	**RELAY**, F/PMP (GRAY) (4-WAY) (9.277) (AC-DELCO #15-8571)	98-99	F (LS1, L36)	1	12088567
18.	3-C27	2.815	**CONNECTOR**, RLY-HORN (BLACK) (6-WAY F) (W/O LEADS) (3.900)	97-99	F	1	12110541

cardiagn.com

19.	3-C28	2.892	**CONNECTOR**, FLSHR-T/SIG LP (BLACK) (2-WAY F) (W/LEADS) (2.575) (AC-DELCO #PT663) ...	97-99	F	1	12126032
20.	3-C8	2.530	**PLUG**, WRG HARN CONN (BLACK) (1-WAY M)	97-99	F	AR	12059168
21.	3-C28	2.892	**FLASHER**, T/SIG LP (YELLOW) (2 LP FLSHR) (AC-DELCO #SF224)	97	F (EXC T90)	1	10041074
	3-C28	2.892	**FLASHER**, T/SIG LP (YELLOW) (2 LP FLSHR) (AC-DELCO #SF224) (YELLOW, 2LP FLASHER)	98-99	F (EXC T72, T79)	1	10041074
	3-C28	2.892	**FLASHER**, T/SIG LP (AC-DELCO #11515735)	97	F (T90) (EXPORT)	1	11515735
	3-C28	2.892	**FLASHER**, T/SIG LP (AC-DELCO #9442495)	98-99	F (T79) (EXPORT)	1	9442495
	3-C28	2.892	**FLASHER**, T/SIG LP (AC-DELCO #11515735)	98-99	F (T72) (EXPORT)	1	11515735
22.	3-C28	2.892	**CONNECTOR**, FLSHR-T/SIG LP (BLACK) (2-WAY F) (W/LEADS) (2.575) (AC-DELCO #PT663) ...	97-99	F	1	12126032
23.	3-C28	2.892	**CLIP**, T/SIG LP FLSHR	97	F	1	25534019
	3-C28	2.892	**CLIP**, T/SIG LP FLSHR	98-99	F (EXC T79)	1	25534019
24.	3-B28	2.485	**MODULE**, HDLP AUTO CONT ...	97-99	F (EXC T62)	1	10407669
25.	3-B28	2.485	**CONNECTOR**, MDL-DAYTIME RUNNING LP CONT (BLACK) (8-WAY F W/LEADS, 7-12GA & 4-18GA AS REQ) (2.535) (AC-DELCO #PT1346)	97-99	F	1	15306189
26.	3-B28	2.485	**CONNECTOR**, MDL-DAYTIME RUNNING LP CONT (BLUE) (8-WAY F) (W/LEADS) (2.535) (AC-DELCO #PT266)	97-99	F (T61)	1	12101875
27.	3-N19	10.777	**MODULE**, P/W CONT (EXPRESS DOWN)	97-99	F	1	12182126
28.	3-N19	10.777	**CONNECTOR**, MDL-P/W CONT (5-WAY F) (9.778) (AC-DELCO #PT531)	97-99	F	1	12117399
29.	3-C20	2.596	**CONNECTOR**, RLY-PARK LP (BLACK) (6-WAY F) (W/O LEADS) (3.900)	97-99	F	1	12110541
30.	3-C20	2.596	**RELAY**, PARK LP (BLACK) (5-WAY M) (USED W/CONNECTOR 15306045) (W/OUT BRKTS) (9.277) (AC-DELCO #15-8719)	97-99	F	1	12193601
31.	3-M27	1.203	**CONNECTOR**, SW-ENG COOL LVL IND (3-WAY F, W/LEADS) (2.383) (AC-DELCO #PT782) ...	97-99	F	1	12167116
32.	3-M27	1.203	**MODULE**, ENG COOL LVL IND (W/2-WAY CONN, TO RAD) (INCLS SEN PROBE) (AC-DELCO #10096163)	97	F (LT1)	1	10096163
	3-M27	1.203	**MODULE**, ENG COOL LVL IND (W/2-WAY CONN, TO RAD) (INCLS SEN PROBE) (AC-DELCO #10096163)	98-99	F (LS1)	1	10096163

cardiagn.com

33.	3-B27	2.483	BLOCK, FWD LP WRG HARN JUNC (REMOTE ACCESS)	97	F	1	12186586
	3-B27	2.483	BLOCK, FWD LP WRG HARN JUNC (USED T/W COVER 12176310) (CONVENIENCE CTR HOLDS FUSES & RELAYS)	98	F	1	12176369
	3-B27	2.483	BLOCK, ENG WRG HARN JUNC (USED T/W COVER 12176310) (CONVENIENCE CTR HOLDS FUSES & RELAYS)	99	F	1	12176369
34.		8.917	NUT, HFH M6X1X6.5 ZOR 9 (FWD LP WRG HARN J/BLK)	97-99	.....	1	3530297
35.		8.917	NUT, HFH M6X1X6.5 ZOR 9 (BAT POS CBL)	97-99	.....	1	3530297
36.	3-N3	3.670	MODULE, PWRT CONT (REMAN) (SEE P.C.M. MODULE & WIRING HARN ILLUSTRATION IN GRP 3.000 FOR DETAILS.) (REQUIRES PROGRAMMING) (AC-DELCO #16227797)	97	F (L36)	1	16227797
	3-N3	3.670	MODULE, PWRT CONT (REMAN) (SEE P.C.M. MODULE & WIRING HARN ILLUSTRATION IN GRP 3.000 FOR DETAILS.) (AC-DELCO #16242921)	97	F (LT1)	1	16242921
	3-N3	3.670	MODULE, PWRT CONT (REMAN) (SEE P.C.M. MODULE & WIRING HARN ILLUSTRATION IN GRP 3.000 FOR DETAILS.) (AC-DELCO #16236757)	98	F (L36)	1	16236757
	3-N3	3.670	MODULE, PWRT CONT (REMAN) (SEE P.C.M. MODULE & WIRING HARN ILLUSTRATION IN GRP 3.000 FOR DETAILS.) (AC-DELCO #16238212)	98	F (LS1)	1	16238212
	3-N3	3.670	MODULE, PWRT CONT (REMAN) (SEE P.C.M. MODULE & WIRING HARN ILLUSTRATION IN GRP 3.000 FOR DETAILS.) (REQUIRES PROGRAMMING PRIOR TO PROPER OPERATION IN VEHICLE)	99	F (LS1)	1	9354896
	3-N3	3.670	MODULE, PWRT CONT (REMAN) (SEE P.C.M. MODULE & WIRING HARN ILLUSTRATION IN GRP 3.000 FOR DETAILS.) (AC-DELCO #9374997)	99	F (L36)	1	9374997
37.	3-N26	14.865	MODULE, INFL RST SEN & DIAG	97	F (AK5)	1	9378311
	3-N26	14.865	MODULE, INFL RST SEN & DIAG	98	F (AK5)	1	9378221
	3-N26	14.865	MODULE, INFL RST SEN & DIAG	99	F (AK5)	1	9391900
38.	3-A11	2.100	CONNECTOR, RLY-START MOT THEFT DTRNT (BLACK) (6-WAY F) (W/O LEADS) (3.900)	97-99	F	1	12110541
39.	3-N20	12.243	CONNECTOR, RLY-R/CMPT LID REL (BLACK) (6-WAY F) (W/O LEADS) (3.900)	97-99	F	1	12110541
40.		8.965	FUSE, MINI 5AMP TAN	97-99	.....	AR	12004005

cardiagn.com

		8.965	FUSE, AUTOFUSE 10 AMP (AC-DELCO #12004007)	97-99		AR	12004007
		8.965	FUSE, AUTOFUSE 15 AMP (AC-DELCO #12004008)	97-99		AR	12004008
		8.965	FUSE, AUTOFUSE 20 AMP	97-99		AR	12004009
41.		8.965	BREAKER, CIRC (12V-30A) (I/P WRG HARN FUSE BLK CIRC)	97-99		2	1252240
42.	3-B27	2.483	RETAINER, MULTIUSE RLY CVR (2.559)	97-99		1	1621000
43.	3-B27	2.483	COVER, MULTIUSE RLY & FUSE	97	F	1	12191560
	3-B27	2.483	COVER, MULTIUSE RLY & FUSE (130 MM X 87 MM)	98-99	F	2	12176310
	3-B27	2.483	COVER, MULTIUSE RLY & FUSE (LWR--UNDER CONV CTR) (INCLS RETS TO HOLD CONN CTR TO BRKT)	97	F	1	12162522
44.	3-C4	2.510	RELAY, FOG LP (BLACK) (5-WAY) (9.277) (AC-DELCO #15-8426)	97	F	1	14100455
	3-B28	2.485	RELAY, FOG LP (GRAY) (4-WAY) (9.277) (AC-DELCO #15-8571)	98-99	F	1	12088567
	3-M26	1.055	RELAY, FAN CONT (BLACK) (5-WAY) (9.277) (AC-DELCO #15-8426)	97	F (L36, LT1)	AR	14100455
	3-M26	1.055	RELAY, FAN CONT (9.778) (AC-DELCO #D7065C)	98-99	F (LS1)	2	12177236
	3-M26	1.055	RELAY, FAN CONT (9.778) (AC-DELCO #D7065C)	98-99	F (L36)	2	12177236
	3-M26	1.055	RELAY, FAN CONT (RETAINED ACSRY PWR) (5-TERMINAL, SPDT, 280 MINI) (AC-DELCO #15-8720)	98-99	F (LS1)	1	12177234
	3-M26	1.055	RELAY, FAN CONT (RETAINED ACSRY PWR) (5-TERMINAL, SPDT, 280 MINI) (AC-DELCO #15-8720)	98-99	F (L36)	1	12177234
	3-N3	3.670	RELAY, SECD AIR INJN PUMP (BLACK) (5-WAY) (9.277) (AC-DELCO #15-8426)	97	F	1	14100455
	3-N14	9.277	RELAY, A/C CMPR (BLACK) (5-WAY) (AC-DELCO #15-8426)	97	F	1	14100455
	3-N14	9.277	RELAY, A/C CMPR (GRAY) (4-WAY) (AC-DELCO #15-8571)	98-99	F	1	12088567
45.	3-N3	3.440	RELAY, THROT CONT (4.720)	97	F (LT1, L36)	1	12135197
	3-N3	3.440	RELAY, THROT CONT (MINI) (4.720) (AC-DELCO #12088595)	97	F	1	12088595
		N.S.	RELAY, THROT CONT	98-99			
47.	3-B27	2.483	BLOCK, FWD LP WRG HARN JUNC (& MULTIUSE RLY) (FUSE & RELAY)	97-99	F	1	12162539
48.	3-C4	2.510	DIODE, M/FUNC (1 AMP) (AED05021)	97-99	F	1	12112421
	3-C4	2.510	DIODE, M/FUNC (3 AMP) (AED5051)	97-99	F	1	12112422
49.	3-C15	2.559	BRACKET, FWD LP WRG HARN	97-99	F	1	10250126

cardiagn.com

		8.950	**RETAINER**, FITS .250 HOLE, 1.01LG.700-OD NYLON BLACK (FWD LP WRG HARN BRKT)	97-99	F	2	10121502
50.	3-B27	2.483	**COVER**, MULTIUSE RLY & FUSE .	97-99	F	1	12162522
51.	3-A14	2.195	**SENSOR**, THEFT DTRNT SHK (ON REAR RH WHEELHOUSE INNER) (W/L.E.D.)	97-98	F (UA6)	1	10268461
	3-A14	2.195	**SENSOR**, THEFT DTRNT SHK (ON REAR RH WHEELHOUSE INNER)	97-99	F (UA6)	1	10444928

RPO DEFINITIONS

AK5 – RESTRAINT SYSTEM,FRONT SEAT,INFLATABLE,DRIVER AND PASSENGER
LS1 – ENGINE GAS, 8 CYL, 5.7L, SFI, ALUMINUM ENGINE
LT1 – ENGINE-GAS, 8 CYL, 5.7L(5.7P),MFI,HO
L36 – ENGINE GAS, 6 CYL, 3.8K, MFI, V6, HO (ERV6 SERIES)
NW9 – TRACTION CONTROL ELECTRONIC
T61 – LIGHTING,DAYTIME RUNNING
T62 – LIGHTING DAYTIME RUNNING ----DELETE
T72 – HEADLAMPS,LH RULE OF THE ROAD(EXPORT)
T79 – LAMPS,REAR FOG(EXPORT)
T90 – LAMPSIGNALING AND MARKER(EXPORT)
UA6 – THEFT DETERRENT SYSTEM

cardiagn.com

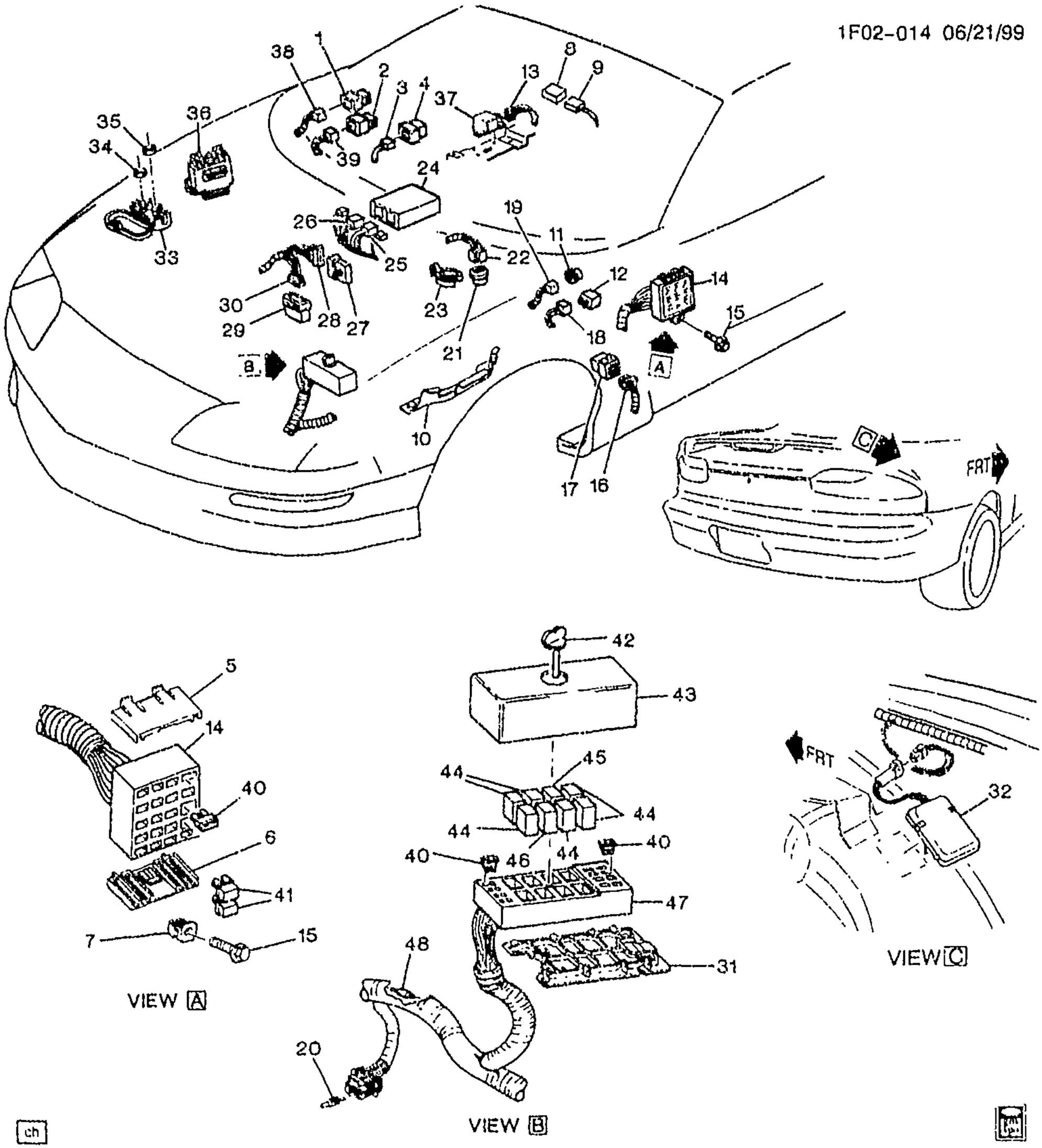

1F02-014

2000-2002 F RELAYS

1.	3-A14	2.195	RELAY, THEFT DTRNT (STARTER ENABLE) (BLACK) (5-WAY M) (USED W/CONNECTOR 15306045) (W/OUT BRKTS) 00-02 F (UA6)	1 12193601

cardiagn.com

2.	3–N20	12.243	**RELAY**, R/CMPT LID REL (5–TERMINAL) (9.277) (AC–DELCO #15–8721)	00–02	F	1	12177233
3.	3–N15	9.650	**CONNECTOR**, RDO SPKR AMPF RLY (BLACK) (6–WAY F) (W/O LEADS) (3.900)	00–02	F	1	12110541
4.	3–A14	2.195	**RELAY**, THEFT DTRNT (STARTER ENABLE) (BLACK) (5–WAY M) (USED W/CONNECTOR 15306045) (W/OUT BRKTS) (9.277) (AC–DELCO #15–8719)	00–02	F (UA6)	1	12193601
5.	3–B27	2.483	**BRACKET**, FUSE BLK RET (UPPER)	00–02	F	1	12129299
6.	3–B27	2.483	**BRACKET**, FUSE BLK RET (LOWER)	00–02	F	1	12129298
7.	3–B27	2.483	**NUT**, I/P WRG HARN FUSE BLK BRKT (M4.2X1.41) (PUSH–IN FOR 12MM SQ HOLE) (10.252) ..	00–02	F	5	17988486
8.	3–N14	9.277	**RELAY**, BLO MOT (BLACK) (5–WAY M) (USED W/CONNECTOR 15306045) (W/OUT BRKTS) (AC–DELCO #15–8719)	00–02	F	1	12193601
	3–N14	8.855	**RELAY**, BLO MOT (BLACK) (5–WAY M) (USED W/CONNECTOR 15306045) (W/OUT BRKTS) (9.277) (AC–DELCO #15–8719)	00–02	F	1	12193601
	3–N14	9.277	**RELAY**, BLO MOT (5–TERMINAL) (AC–DELCO #15–8721)	00–02	F	1	12177233
9.	3–N14	8.855	**CONNECTOR**, RLY–BLO MOT (BLACK) (6–WAY F) (W/O LEADS) (3.900)	00–02	F	1	12110541
10.	3–C15	2.559	**BRACKET**, FWD LP WRG HARN (ON LFT SI RL)	00–02	F	1	10250126
		8.950	**RETAINER**, FITS .250 HOLE, 1.01LG.700–OD NYLON BLACK (FWD LP WRG HARN BRKT)	00–02	F	2	10121502
11.	3–C18	2.575	**FLASHER**, HAZARD LP (1 1/2" DIA) (6 LP FLSHR) (AC–DELCO #SF552) (1 1/2" DIA, 6 LP FISHER)	00–02	F	1	491391
12.	3–C27	2.815	**RELAY**, HORN (GRAY) (4–WAY) (9.277) (AC–DELCO #15–8571)	00–02	F	1	12088567
13.	3–N26	14.865	**CONNECTOR**, SEN–INFL RST ARMING (7–WAY F, W/LEADS) ..	00–02	.....	1	12126037
14.	3–B27	2.483	**BLOCK**, FUSE (I/P WRG)	00–02	F	1	12146075
15.		8.900	**BOLT/SCREW**, HWH W/FL WA M4.2X1.41X20, 6010M, 7253M, 12.5 OD, DOG PT (I/P WRG HARN FUSE BLK) (8.977)	00–02	.....	1	11509709
16.	3–N10	3.900	**CONNECTOR**, RLY–F/PMP (TWO 12GA AND THREE 14GA WIRES) (8.855) (AC–DELCO #PT1205)	00–02	F	1	15306045
17.	3–N10	3.900	**RELAY**, F/PMP (GRAY) (4–WAY) (9.277) (AC–DELCO #15–6571)	00–02	F (LS1, L36)	1	12088567

cardiagn.com

18.	3–C27	2.815	**CONNECTOR**, HORN (GREY) (2–WAY F, M/P 150 SLD W/LEADS) (4.710) (AC–DELCO #PT1357)	00	F	2	15306302
	3–C27	2.815	**CONNECTOR**, HORN (LT GREY) (2–WAY F150) (FSU–12116958 FOR NON–WHL SPD SENSOR APPLICATIONS ONLY) (2.535)	00–02	F (L36)	1	12052644
	3–C27	2.815	**CONNECTOR**, HORN (BLACK) (6–WAY F) (W/O LEADS) (3.900)	00–02	F	1	12110541
10.	3–C28	2.892	**CONNECTOR**, FLSHR–T/SIG LP (BLACK) (2–WAY F) (W/LEADS) (2.575) (AC–DELCO #PT663)	00–02	F	1	12126032
20.	3–C8	2.530	**PLUG**, WRG HARN CONN (BLACK) (1–WAY M)	00–02	F	AR	12059168
21.	3–C28	2.892	**FLASHER**, T/SIG LP (YELLOW) (2 LP FLSHR) (AC–DELCO #SF224) (YELLOW, 2LP FLASHER)	00–02	F (EXC T72, T79)	1	10041074
	3–C28	2.892	**FLASHER**, T/SIG LP (AC–DELCO #9442495)	00–02	F (T79) (EXPORT)	1	9442495
	3–C28	2.892	**FLASHER**, T/SIG LP (AC–DELCO #11515735)	00–02	F (T72) (EXPORT)	1	11515735
22.	3–C28	2.892	**CONNECTOR**, FLSHR–T/SIG LP (BLACK) (2–WAY F) (W/LEADS) (2.575) (AC–DELCO #PT663)	00–02	F	1	12126032
23.	3–C28	2.892	**CLIP**, T/SIG LP FLSHR	00–02	F (EXC T79)	1	25534019
24.	3–B28	2.485	**MODULE**, HDLP AUTO CONT	00–02	F (EXC T62)	1	10407669
25.	3–B28	2.485	**CONNECTOR**, MDL–DAYTIME RUNNING LP CONT (BLACK) (8–WAY F W/LEADS, 7–12GA & 4–18GA AS REQ) (2.535) (AC–DELCO #PT1346)	00–02	F	1	15306189
26.	3–B28	2.485	**CONNECTOR**, MDL–DAYTIME RUNNING LP CONT (BLUE) (8–WAY F) (W/LEADS) (2.535) (AC–DELCO #PT266)	00–02	F (T61)	1	12101875
27.	3–N19	10.777	**MODULE**, P/W CONT (EXPRESS DOWN)	00–02	F	1	12182126
28.	3–N19	10.777	**CONNECTOR**, MDL–P/W CONT (5–WAY F) (9.778) (AC–DELCO #PT531)	00–02	F	1	12117399
29.	3–C20	2.596	**CONNECTOR**, RLY–PARK LP (BLACK) (6–WAY F) (W/O LEADS) (3.900)	00–02	F	1	12110541
30.	3–C20	2.596	**CONNECTOR**, RLY–PARK LP (BLACK) (6–WAY F) (W/O LEADS) (3.900)	00–02	F	1	12110541
31.	3–B27	2.463	**COVER**, MULTIUSE RLY & FUSE	00–02	F	1	12162522
32.	3–A14	2.195	**SENSOR**, THEFT DTRNT SHK (ON REAR RH WHEELHOUSE INNER)	00–02	F (UA6)	1	10444928
33.	3–B27	2.483	**BLOCK**, FWD LP WRG HARN JUNC (USED T/W COVER 12176310) (CONVENIENCE CTR HOLDS FUSES & RELAYS)	00–02	F	2	12176369
34.		8.917	**NUT**, HFH M6X1X6.5 ZOR 9 (FWD LP WRG HARN J/BLK)	00–02	F	1	3530297

cardiagn.com

35.		8.917	NUT, HFH M6X1X6.5 ZOR 9 (BAT POS CBL)	00–02	.....	1	3530297
36.	3–N3	3.670	**MODULE**, PWRT CONT (REMAN) (SEE P.C.M. MODULE & WIRING HARN ILLUSTRATION IN GRP 3.000 FOR DETAILS.) (REQUIRES PROGRAMMING PRIOR TO PROPER OPERATION IN VEHICLE)	00–02	F (LS1)	1	9354896
	3–N3	3.670	**MODULE**, PWRT CONT (REMAN) (SEE P.C.M. MODULE & WIRING HARN ILLUSTRATION IN GRP 3.000 FOR DETAILS.) (REQUIRES PROGRAMMING PRIOR TO PROPER OPERATION IN VEHICLE) (AC–DELCO #9380717)	00–02	F (L36)	1	9380717
	3–N3	3.670	**MODULE**, PWRT CONT (REMAN) (SEE P.C.M. MODULE & WIRING HARN ILLUSTRATION IN GRP 3.000 FOR DETAILS.) (AC–DELCO #12200411) (DLWY)	01–02	F (LS1, GU2) (EXC K29)	1	12200411
	3–N3	3.670	**MODULE**, PWRT CONT (REMAN) (SEE P.C.M. MODULE & WIRING HARN ILLUSTRATION IN GRP 3.000 FOR DETAILS.) (AC–DELCO #12200411) (DLZR)	01–02	F (LS1, GU2, K29)	1	12200411
	3–N3	3.670	**MODULE**, PWRT CONT (REMAN) (SEE P.C.M. MODULE & WIRING HARN ILLUSTRATION IN GRP 3.000 FOR DETAILS.) (AC–DELCO #12200411) (DLXB)	01–02	F (LS1, GU2, K29, NA3, QLC)	1	12200411
	3–N3	3.670	**MODULE**, PWRT CONT (REMAN) (SEE P.C.M. MODULE & WIRING HARN ILLUSTRATION IN GRP 3.000 FOR DETAILS.) (AC–DELCO #12200411) (DLXB)	01–02	F (LS1, GU2, K29, NF7, QLC)	1	12200411
	3–N3	3.670	**MODULE**, PWRT CONT (REMAN) (SEE P.C.M. MODULE & WIRING HARN ILLUSTRATION IN GRP 3.000 FOR DETAILS.) (AC–DELCO #12200411) (DJZP)	01–02	F (LS1, GU2, NA3, NT3)	1	12200411
	3–N3	3.670	**MODULE**, PWRT CONT (REMAN) (SEE P.C.M. MODULE & WIRING HARN ILLUSTRATION IN GRP 3.000 FOR DETAILS.) (AC–DELCO #12200411) (DJZN)	01–02	F (LS1, GU2, NC1, NF7)	1	12200411
	3–N3	3.670	**MODULE**, PWRT CONT (REMAN) (SEE P.C.M. MODULE & WIRING HARN ILLUSTRATION IN GRP 3.000 FOR DETAILS.) (AC–DELCO #12200411) (DLXA)	01–02	F (LS1, GU2, NT3, QLC)	1	12200411
	3–N3	3.670	**MODULE**, PWRT CONT (REMAN) (SEE P.C.M. MODULE & WIRING HARN ILLUSTRATION IN GRP 3.000 FOR DETAILS.) (AC–DELCO #12200411) (DLXD)	01–02	F (LS1, GU5, K29)	1	12200411

cardiagn.com

3–N3	3.670	**MODULE**, PWRT CONT (REMAN) (SEE P.C.M. MODULE & WIRING HARN ILLUSTRATION IN GRP 3.000 FOR DETAILS.) (AC–DELCO #12200411) (DLXC)	01–02	F (LS1, GU5, NC1)	1	12200411
3–N3	3.670	**MODULE**, PWRT CONT (REMAN) (SEE P.C.M. MODULE & WIRING HARN ILLUSTRATION IN GRP 3.000 FOR DETAILS.) (AC–DELCO #12200411) (DLXC)	01–02	F (LS1, GU5, NF7) (EXC K29)	1	12200411
3–N3	3.670	**MODULE**, PWRT CONT (REMAN) (SEE P.C.M. MODULE & WIRING HARN ILLUSTRATION IN GRP 3.000 FOR DETAILS.) (AC–DELCO #12200411) (DLXF)	01–02	F (LS1, GU5, NM2)	1	12200411
3–N3	3.670	**MODULE**, PWRT CONT (REMAN) (SEE P.C.M. MODULE & WIRING HARN ILLUSTRATION IN GRP 3.000 FOR DETAILS.) (AC–DELCO #12200411) (DLXH)	01–02	F (LS1, MM6) (EXC K29)	1	12200411
3–N3	3.670	**MODULE**, PWRT CONT (REMAN) (SEE P.C.M. MODULE & WIRING HARN ILLUSTRATION IN GRP 3.000 FOR DETAILS.) (AC–DELCO #12200411) (DLXL)	01–02	F (LS1, MM6, K29)	1	12200411
3–N3	3.670	**MODULE**, PWRT CONT (REMAN) (SEE P.C.M. MODULE & WIRING HARN ILLUSTRATION IN GRP 3.000 FOR DETAILS.) (AC–DELCO #12200411) (DJZY)	01–02	F (LS1, MM6, NC1, NF7)	1	12200411
3–N3	3.670	**MODULE**, PWRT CONT (REMAN) (SEE P.C.M. MODULE & WIRING HARN ILLUSTRATION IN GRP 3.000 FOR DETAILS.) (AC–DELCO #12200411) (DLXK)	01–02	F (LS1, MM6, NT3)	1	12200411
3–N3	3.670	**MODULE**, PWRT CONT (REMAN) (SEE P.C.M. MODULE & WIRING HARN ILLUSTRATION IN GRP 3.000 FOR DETAILS.) (AC–DELCO #12200411) (DLXB)	01–02	F (LS1, MM6, QLC) (EXC K29)	1	12200411
3–N3	3.670	**MODULE**, PWRT CONT (REMAN) (SEE P.C.M. MODULE & WIRING HARN ILLUSTRATION IN GRP 3.000 FOR DETAILS.) (AC–DELCO #12209624) (DMCW)	01–02	F (L36, M30, GU4) (EXC K29)	1	12209624
3–N3	3.670	**MODULE**, PWRT CONT (REMAN) (SEE P.C.M. MODULE & WIRING HARN ILLUSTRATION IN GRP 3.000 FOR DETAILS.) (AC–DELCO #12209624) (DMCX)	01–02	F (L36, M30, GU4 K29)	1	12209624

cardiaopn.com

3–N3	3.670	**MODULE**, PWRT CONT (REMAN) (SEE P.C.M. MODULE & WIRING HARN ILLUSTRATION IN GRP 3.000 FOR DETAILS.) (AC–DELCO #12209624) (DMCZ)	01–02	F (L36, M30, GU6, K29, NF7)	1	12209624
3–N3	3.670	**MODULE**, PWRT CONT (REMAN) (SEE P.C.M. MODULE & WIRING HARN ILLUSTRATION IN GRP 3.000 FOR DETAILS.) (AC–DELCO #12209624) (DMDA)	01–02	F (L36, M30, GU6, NA3)	1	12209624
3–N3	3.670	**MODULE**, PWRT CONT (REMAN) (SEE P.C.M. MODULE & WIRING HARN ILLUSTRATION IN GRP 3.000 FOR DETAILS.) (AC–DELCO #12209624) (DMCY)	01–02	F (L36, M30, GU6, NC1, NF7) (EXC K29)	1	12209624
3–N3	3.670	**MODULE**, PWRT CONT (REMAN) (SEE P.C.M. MODULE & WIRING HARN ILLUSTRATION IN GRP 3.000 FOR DETAILS.) (AC–DELCO #12209624) (DMDB)	01–02	F (L36, M30, GU6, NT3)	1	12209624
3–N3	3.670	**MODULE**, PWRT CONT (REMAN) (SEE P.C.M. MODULE & WIRING HARN ILLUSTRATION IN GRP 3.000 FOR DETAILS.) (AC–DELCO #12209624) (DMCT)	01–02	F (L36, M49, GU5, K29, NF7)	1	12209624
3–N3	3.670	**MODULE**, PWRT CONT (REMAN) (SEE P.C.M. MODULE & WIRING HARN ILLUSTRATION IN GRP 3.000 FOR DETAILS.) (AC–DELCO #12209624) (DMCS)	01–02	F (L36, M49, GU5, NC1, NF7) (EXC K29)	1	12209624
3–N3	3.670	**MODULE**, PWRT CONT (REMAN) (SEE P.C.M. MODULE & WIRING HARN ILLUSTRATION IN GRP 3.000 FOR DETAILS.) (AC–DELCO #12209624) (DMCU)	01–02	F (L36, M49, GU5, NT3)	1	12209624
3–N3	3.670	**MODULE**, PWRT CONT (REMAN) (ID:DHPP) (SEE P.C.M. MODULE & WIRING HARN ILLUSTRATION IN GRP 3.000 FOR DETAILS.) (REQUIRES PROGRAMMING PRIOR TO PROPER OPERATION IN VEHICLE) (AC–DELCO #9380717)	00	F (L36, M30, GU4, NF2) (EXC K29)	1	9380717
3–N3	3.670	**MODULE**, PWRT CONT (REMAN) (ID:DHPR) (SEE P.C.M. MODULE & WIRING HARN ILLUSTRATION IN GRP 3.000 FOR DETAILS.) (REQUIRES PROGRAMMING PRIOR TO PROPER OPERATION IN VEHICLE) (AC–DELCO #9380717)	00–02	F (L36, M30, GU4, NC1) (EXC K29)	1	9380717

cardiagn.com

3-N3	3.670	**MODULE**, PWRT CONT (REMAN) (ID:DHPS) (SEE P.C.M. MODULE & WIRING HARN ILLUSTRATION IN GRP 3.000 FOR DETAILS.) (REQUIRES PROGRAMMING PRIOR TO PROPER OPERATION IN VEHICLE) (AC-DELCO #9380717)	00-02	F (L36, M30, GU6, NF2) (EXC K29)	1	9380717
3-N3	3.670	**MODULE**, PWRT CONT (REMAN) (ID:DHPT, (SEE P.C.M. MODULE & WIRING HARN ILLUSTRATION IN GRP 3.000 FOR DETAILS.) (REQUIRES PROGRAMMING PRIOR TO PROPER OPERATION IN VEHICLE) (AC-DELCO #9380717)	00-02	F (L36, M30, GU6, NC1) (EXC K29)	1	9380717
3-N3	3.670	**MODULE**, PWRT CONT (REMAN) (ID:DHPU) (SEE P.C.M. MODULE & WIRING HARN ILLUSTRATION IN GRP 3.000 FOR DETAILS.) (REQUIRES PROGRAMMING PRIOR TO PROPER OPERATION IN VEHICLE) (AC-DELCO #9380717)	00-02	F (L36, M30, GU6, NA7, QII)	1	9380717
3-N3	3.670	**MODULE**, PWRT CONT (REMAN) (ID:DHPW) (SEE P.C.M. MODULE & WIRING HARN ILLUSTRATION IN GRP 3.000 FOR DETAIL S.) (REQUIRES PROGRAMMING PRIOR TO PROPER OPERATION IN VEHICLE) (AC-DELCO #9380717)	00-02	F (L36, M49, GU5, NF2) (EXC K29)	1	9380717
3-N3	3.670	**MODULE**, PWRT CONT (REMAN) (ID:DHPX) (SEE P.C.M MODULE & WIRING HARN ILLUSTRATION IN GRP 3.000 FOR DETAILS.) (REQUIRES PROGRAMMING PRIOR TO PROPER OPERATION IN VEHICLE) (AC-DELCO #9380717)	00-02	F (L36, M49, GU5, NC1) (EXC K29)	1	9380717
3-N3	3.670	**MODULE**, PWRT CONT (REMAN) (ID:DHPY) (SEE P.C.M. MODULE & WIRING HARN ILLUSTRATION IN GRP 3.000 FOR DETAILS.) (REQUIRES PROGRAMMING PRIOR TO PROPER OPERATION IN VEHICLE) (AC-DELCO #9380717)	00-02	F (L36, M49, GU5, K29, NA7, QII)	1	9380717
3-N3	3.670	**MODULE**, PWRT CONT (REMAN) (ID:DHPZ) (SEE P.C.M. MODULE & WIRING HARN ILLUSTRATION IN GRP 3.000 FOR DETAILS.) (REQUIRES PROGRAMMING PRIOR TO PROPER OPERATION IN VEHICLE) (AC-DELCO #9380717)	00-02	F (L36, M30, GU4, K29, NF2)	1	9380717

cardiagn.com

	3–N3	3.670	MODULE, PWRT CONT (REMAN) (ID:DHRA) (SEE P.C.M. MODULE & WIRING HARN ILLUSTRATION IN GRP 3.000 FOR DETAILS.) (REQUIRES PROGRAMMING PRIOR TO PROPER OPERATION IN VEHICLE) (AC–DELCO #9380717)	00–02	F (L36, M30, GU6, K29, NF2) (EXC K29)	1	9380717
	3–N3	3.670	MODULE, PWRT CONT (REMAN) (ID:DHRB) (SEE P.C.M. MODULE & WIRING HARN ILLUSTRATION IN GRP 3.000 FOR DETAILS.) (REQUIRES PROGRAMMING PRIOR TO PROPER OPERATION IN VEHICLE) (AC–DELCO #9380717)	00–02	F (L36, M30, GU6, NA3) (EXC K29)	1	9380717
	3–N3	3.670	MODULE, PWRT CONT (REMAN) (ID:DHRC) (SEE P.C.M. MODULE & WIRING HARN ILLUSTRATION IN GRP 3.000 FOR DETAILS.) (REQUIRES PROGRAMMING PRIOR TO PROPER OPERATION IN VEHICLE) (AC–DELCO #9380717)	00–02	F (L36, M30, GU5, K29, NF2) (EXC K29)	1	9380717
37.	3–N26	14.865	MODULE, INFL RST SEN & DIAG	00	F (AK5)	1	9391900
	3–N26	14.865	MODULE, INFL RST SEN & DIAG	01–02	F (AK5)	1	12209750
38.	3–A11	2.100	CONNECTOR, RLY–START MOT THEFT DTRNT (BLACK) (6–WAY F) (W/O LEADS) (3.900)	00–02	F	1	12110541
39.	3–N20	12.243	CONNECTOR, RLY–R/CMPT LID REL (BLACK) (6–WAY F) (W/O LEADS) (3.900)	00–02	F	1	12110541
40.		8.965	FUSE, MINI 5AMP TAN (WRG HARN)	00–02		AR	12004005
		8.965	FUSE, AUTOFUSE 7.5 AMP (WRG HARN)	00–02		AR	12004006
		8.965	FUSE, AUTOFUSE 10 AMP (WRG HARN) (AC–DELCO #12004007)	00–02		AR	12004007
		8.965	FUSE, AUTOFUSE 15 AMP (WRG HARN) (AC–DELCO #12004008)	00–02		AR	12004008
		8.965	FUSE, AUTOFUSE 20 AMP (WRG HARN)	00–02		AR	12004009
41.		8.965	BREAKER, CIRC (12V–30A) (I/P WRG HARN FUSE BLK CIRC)	00–02		2	1252240
42.	3–N19	10.777	MODULE, P/W CONT (EXPRESS DOWN)	00–02	F	1	12182126
43.	3–B27	2.483	COVER, MULTIUSE RLY & FUSE (130 MM X 87 MM)	00–02	F	2	12176310
44.	3–B28	2.485	RELAY, FOG LP (GRAY) (4–WAY) (9.277) (AC–DELCO #15–8571)	00–02	F	1	12088567
	3–M26	1.055	RELAY, FAN CONT (9.778) (AC–DELCO #D7065C)	00–02	F (LS1)	2	12177236
	3–M26	1.055	RELAY, FAN CONT (9.778) (AC–DELCO #D7065C)	00–02	F (L36)	2	12177236
	3–M26	1.055	RELAY, FAN CONT (RETAINED ACSRY PWR) (5–TERMINAL, SPDT, 280 MINI) (AC–DELCO #15–8720)	00–02	F (LS1)	1	12177234

cardiagn.com

	3-M26	1.055	RELAY, FAN CONT (RETAINED ACSRY PWR) (5-TERMINAL, SPDT: 280 MINI) (AC-DELCO #15-8720)	00-02	F (L36)	1	12177234
	3-N14	9.277	RELAY, A/C CMPR (GRAY) (4-WAY) (AC-DELCO #15-8571)	00-02	F	1	12088567
45.		N.S.	RELAY, THROT CONT	00-02	....		
46.		N.S.	RELAY, ELEK BRK CONT		.....		
47.	3-B27	2.483	BLOCK, FWD LP WRG HARN JUNC (USED T/W COVER 12176310) (CONVENIENCE CTR HOLDS FUSES & RELAYS)	00-02	F	2	12176369
48.	3-C4	2.510	DIODE, M/FUNC (1 AMP) (AED05021)	00-02	F	1	12112421
	3-C4	2.510	DIODE, M/FUNC (3 AMP) (AED5051)	00-02	F	1	12112422

RPO DEFINITIONS

AK5 – RESTRAINT SYSTEM,FRONT SEAT,INFLATABLE,DRIVER AND PASSENGER
GU2 – AXLE,REAR,2.73 RATIO
GU4 – AXLE,REAR,3.08 RATIO
GU5 – AXLE,REAR,3.23 RATIO
GU6 – AXLE,REAR,3.42 RATIO
K29 – MODULE,POWERTRAIN CONTROL
LS1 – ENGINE GAS, 8 CYL, 5.7L, SFI, ALUMINUM ENGINE
L36 – ENGINE GAS, 6 CYL, 3.8K, MFI, V6, HO (ERV6 SERIES)
MM6 – TRANSMISSION MAN 6 SPD, BORG WARNER, 85MM, 1ST 2.66, 6TH 0.50, O/D
M30 – TRANSMISSION,AUTOMATIC 4 SPEED,4L60E,ELECTRONIC
M49 – TRANSMISSION MAN 5 SPD, BORG WARNER, 77MM, 3.75 1ST, .76 5TH, O/D
NA3 – EMISSION SYSTEM JAPAN
NA7 – EMISSION SYSTEM EUROPEAN
NC1 – EMISSION SYSTEM CALIFORNIA, LEV
NF2 – EMISSION SYSTEM,FEDERAL TIER 1
NF7 – EMISSION SYSTEM FEDERAL, NLEV
NM2 – EMISSION SYSTEM EXPORT, LEADED FUEL
NT3 – EMISSION SYSTEM EEC 00
QII – TIRE ALL P215/60R16 BW R/PE ST TL AL3 94H
QLC – TIRE,ALL P245/50ZR16/N BL R/PE ST TL HWY
T61 – LIGHTING,DAYTIME RUNNING
T62 – LIGHTING DAYTIME RUNNING --- DELETE
T72 – HEADLAMPS,LH RULE OF THE ROAD(EXPORT)
T79 – LAMPS,REAR FOG(EXPORT)
UA6 – THEFT DETERRENT SYSTEM

cardiagn.com

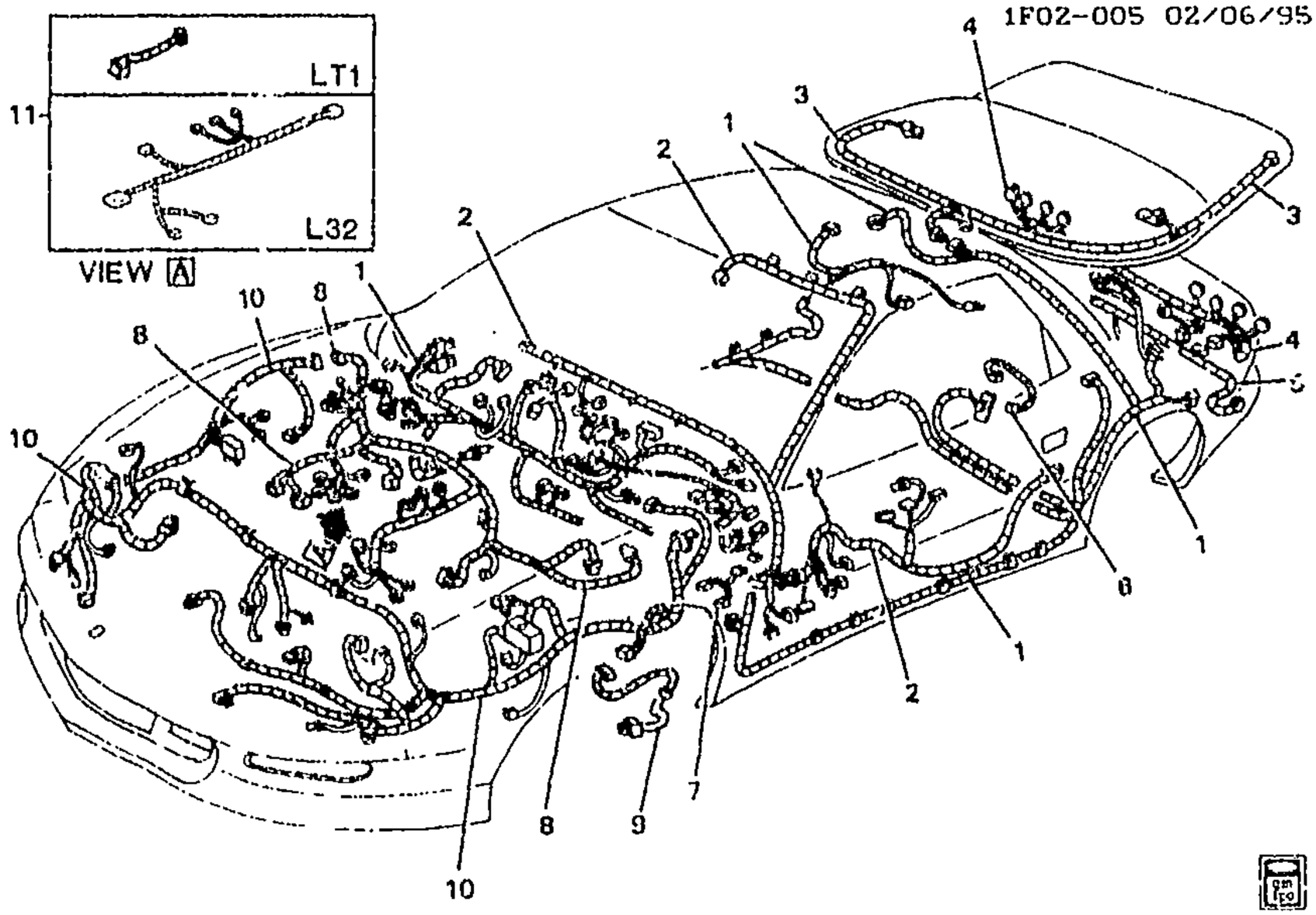

1993-2002 F WIRING HARNESS

1.	3-B10	2.480	HARNESS, I/P WRG	93	F (MD8, UQ0) (EXC Z49)	1	12126974
	3-B10	2.480	HARNESS, I/P WRG	93	F (MD8, U82) (EXC UD6, Z49)	1	12126978
	3-B10	2.480	HARNESS, I/P WRG	93	F87 (M28, M29, M49, UQ0) (EXC Z49)	1	12126976
	3-B10	2.480	HARNESS, I/P WRG	93	F87 (M28, M29, M49, U82) (EXC UD6, Z49) ..	1	12140120
	3-B10	2.480	HARNESS, I/P WRG	94	F67 (M30) (EXC UD6, UD4)	1	12145375
	3-B10	2.480	HARNESS, I/P WRG	94	F67 (MM6, M49) (EXC UD6)	1	12145377
	3-B10	2.480	HARNESS, I/P WRG (ON VEHS W/O Z49, SPLICE TOGETHER CAV D&E LEADS AT 8-WAY BLUE DAYTIME RUNNING LAMP MODULE CONN)	94	F87 (M30, UQ0) (EXC UD4)	1	12145354
	3-B10	2.480	HARNESS, I/P WRG (ON VEH W/O DAYTIME RUN LPS, SPLICE TOGETHER CAV D&E LEADS @ 8- WAY BLUE DRL CONN)	94	F87 (MM6, M49, UQ0) .	1	12145356
	3-B10	2.480	HARNESS, I/P WRG (FOR VEHS W/O Z49, SPLICE TOGETHER CAV D&E LEADS @ 8-WAY BLUE DAYTIME RUN LP MDL CONN)	94	F87 (M30, U82) (EXC UD6)	1	12145356

cardiagn.com

3–B10	2.480	HARNESS, I/P WRG	97	F67 (MM6, M49) (EXC T72, UD4)	1	12145641
3–B10	2.480	HARNESS, I/P WRG	97	F67 (M30) (EXC T72, UD4)	1	12145643
3–B10	2.480	HARNESS, I/P WRG	97	F67 (M30, ETA) (EXC T72, UD4)	1	12177557
3–B10	2.480	HARNESS, I/P WRG	97	F87 (MM6, M49, UZ7) (EXC T72, UD4)	1	12145621
3–B10	2.480	HARNESS, I/P WRG	97	F87 (M30, UQ0, U62) (EXC T72, UD4)	1	12145633
3–B10	2.480	HARNESS, I/P WRG	97	F87 (M30, UZ7) (EXC T72, UD4)	1	12145634
3–B10	2.480	HARNESS, I/P WRG	97	F87 (MM6, M49, UQ0, U62) (EXC T72, UD4)	1	12145635
3–B10	2.480	HARNESS, I/P WRG	97	F87 (M30, T72, UZ7)	1	12145654
3–B10	2.480	HARNESS, I/P WRG	97	F87 (M30, UD4, UZ7) (EXC NW9)	1	12145655
3–B10	2.480	HARNESS, I/P WRG	97	F87 (MM6, T72, UZ7) (EXC NW9)	1	12145905
3–B10	2.480	HARNESS, I/P WRG	98	F67 (MM6, M49) (EXC T72, T79, UD4)	1	12177572
3–B10	2.480	HARNESS, I/P WRG	98	F67 (M30) (EXC ETA, T72, T79, UD4)	1	12177573
3–B10	2.480	HARNESS, I/P WRG	98	F67 (M30, ETA) (EXC T72, T79, UD4)	1	12177585
3–B10	2.480	HARNESS, I/P WRG	98	F87 (MM6, M49, UZ7) (EXC T72, T79, UD4)	1	12177564
3–B10	2.480	HARNESS, I/P WRG	98	F87 (M30, UQ0) (EXC T72, T79, UD4)	1	12177567
3–B10	2.480	HARNESS, I/P WRG	98	F87 (M30, UZ7) (EXC T72, T79, UD4)	1	12177568
3–B10	2.480	HARNESS, I/P WRG	98	F87 (MM6, M49, UQ0) (EXC T72, T79, UD4)	1	12177569
3–B10	2.480	HARNESS, I/P WRG	99	FP67 (MM6, M49, U59) (EXC T72, T79, UD4)	1	12177703
3–B10	2.480	HARNESS, I/P WRG	99	FP67 (M30, U59) (EXC ETA, T72, T79, UD4)	1	12177704
3–B10	2.480	HARNESS, I/P WRG	99	FP67 (M30, ETA, U59) (EXC T72, T79, UD4)	1	12177716
3–B10	2.480	HARNESS, I/P WRG	99	FP67 (MM6, M49, U62) (EXC T72, T79, UD4)	1	12177717
3–B10	2.480	HARNESS, I/P WRG	99	FP67 (M30, U62) (EXC ETA, T72, T79, UD4)	1	12177718
3–B10	2.480	HARNESS, I/P WRG	99	FP67 (M30, ETA, U62) (EXC T72, T79, UD4)	1	12177719
3–B10	2.480	HARNESS, I/P WRG	99	FP87 (MM6, M49, UZ7) (EXC T72, T79, UD4)	1	12177695
3–B10	2.480	HARNESS, I/P WRG	99	FP87 (M30, UQ0) (EXC T72, T79, UD4)	1	12177698
3–B10	2.480	HARNESS, I/P WRG	99	FP87 (M30, UZ7) (EXC T72, T79, UD4)	1	12177699
3–B10	2.480	HARNESS, I/P WRG	99	FP87 (MM6, M49, UQ0) (EXC T72, T79, UD4)	1	12177700
3–B10	2.480	HARNESS, I/P WRG	00–02	F67 (MM6, M49, U59) (EXC T72, T79, UD4)	1	12177664
3–B10	2.480	HARNESS, I/P WRG	00–02	F67 (M30, U59) (EXC ETA, T72, T79, UD4)	1	12177665
3–B10	2.480	HARNESS, I/P WRG	00–02	F67 (M30, ETA, U59) (EXC T72, T79, UD4)	1	12177677
3–B10	2.480	HARNESS, I/P WRG	00–02	F87 (MM6, M49, UZ7)	1	12177656

cardiagn.com

3-B10	2.480	**HARNESS**, I/P WRG	00-02	F87 (M30, UQ0) (EXC T72, T79, UD4)	1	12177659
3-B10	2.480	**HARNESS**, I/P WRG	00-02	F87 (M30, UZ7) (EXC T72, T79, UD4)	1	12177660
3-B10	2.480	**HARNESS**, I/P WRG	00-02	F87 (MM6, M49, UQ0) (EXC T72, T79, UD4) ..	1	12177661
3-B10	2.480	**HARNESS**, I/P WRG (ON VEH INITIALLY W/O WIRE IN CAV B4 OF INLINE TO FWD LP CONN BLK, CUT RED 12GA WIRE @ CAV B4 & SPLICE TO RED 10GA WIRE @ CAV C2) (ON VEH W/O Z49, SPLICE CAV D&E LEADS TOGETHER @ BLUE 8-WAY DRL CONN)	96	F67 (M30, UA6)	1	12177432
3-B10	2.480	**HARNESS**, I/P WRG (ON VEH INITIALLY W/O WIRE IN CAV B4 OF INLINE TO FWD LP CONN BLK, CUT RED 12GA WIRE @ CAV B4 & SPLICE TO RED 10GA WIRE @ CAV C2) (ON VEH W/O Z49, SPLICE CAV D&E LEADS TOGETHER @ BLUE 8-WAY DRL CONN)	96	F67 (MM6, M49)	1	12177434
3-B10	2.480	**HARNESS**, I/P WRG (ON VEH INITIALLY W/O WIRE IN CAV B4 OF INLINE TO FWD LP CONN BLK, CUT RED 12GA WIRE @ CAV B4 & SPLICE TO RED 10GA WIRE @ CAV C2) (ON VEH W/O Z49, SPLICE CAV D&E LEADS TOGETHER @ BLUE 8-WAY DRL CONN)	96	F67 (M30, UD6) (EXC UA6)	1	12177436
3-B10	2.480	**HARNESS**, I/P WRG (ON VEH INITIALLY W/O WIRE IN CAV B4 OF INLINE TO FWD LP CONN BLK, CUT RED 12GA WIRE @ CAV B4 & SPLICE TO RED 10GA WIRE @ CAV C2) (ON VEH W/O Z49, SPLICE CAV D&E LEADS TOGETHER @ BLUE 8-WAY DRL CONN)	96	F67 (M30) (EXC UA6) ..	1	12177437
3-B10	2.480	**HARNESS**, I/P WRG (ON VEH INITIALLY W/O WIRE IN CAV B4 OF INLINE TO FWD LP CONN BLK, CUT RED 12GA WIRE @ CAV B4 & SPLICE TO RED 10GA WIRE @ CAV C2) (ON VEH W/O Z49, SPLICE CAV D&E LEADS TOGETHER @ BLUE 8-WAY DRL CONN)	96	F87 (M30, UD6, U65) (EXC UA6)	1	12177447
3-B10	2.480	**HARNESS**, I/P WRG (ON VEH W/O Z49, SPLICE CAV D&E LEADS TOGETHER @ 8-WAY BLUE DRL MDL CONN, ALSO @ BLACK 8-WAY DRL MDL CONN SPLICE CAV B TO CAV E & CAV C TO CAV G)	96	F87 (M30, UQ0, U62) ..	1	12177406

cardiagn.com

3-B10	2.480	**HARNESS**, I/P WRG (ON VEH W/O Z49, SPLICE CAV D&E LEADS TOGETHER @ 8-WAY BLUE DRL MDL CONN, ALSO @ BLACK 8-WAY DRL MDL CONN SPLICE CAV B TO CAV E & CAV C TO CAV G)	96	F87 (MM6, M49, UQ0, U62)	1	12177409
3-B10	2.480	**HARNESS**, I/P WRG (ON VEH W/O Z49, SPLICE CAV D&E LEADS TOGETHER @ 8-WAY BLUE DRL MDL CONN, ALSO @ BLACK 8-WAY DRL MDL CONN SPLICE CAV B TO CAV E & CAV C TO CAV G)	96	F87 (M30, U65)	1	12177412
3-B10	2.480	**HARNESS**, I/P WRG (ON VEH W/O Z49, SPLICE CAV D&E LEADS TOGETHER @ 8-WAY BLUE DRL MDL CONN, ALSO @ BLACK 8-WAY DRL MDL CONN SPLICE CAV B TO CAV E & CAV C TO CAV G)	96	F87 (MM6, M49, U65) ..	1	12177414
3-B10	2.480	**HARNESS**, I/P WRG (USED W/STOP LP SW LABELED 10194425, MATES W/2-WAY&3-WAY CONN) (ON VEHS W/O DAYTIME RUN LPS, SPLICE CAV D&E TOGETHER @ BLUE 8-WAY DRL MDL CONN) .	95	F67 (M30) (1ST DES) ..	1	12145226
3-B10	2.480	**HARNESS**, I/P WRG (USED W/STOP LP SW LABELED 10194425, MATES W/2-WAY&3-WAY CONN) (ON VEHS W/O DAYTIME RUN LPS, SPLICE CAV D&E TOGETHER @ BLUE 8-WAY DRL MDL CONN) .	95	F67 (MM6, M49) (1ST DES)	1	12145228
3-B10	2.480	**HARNESS**, I/P WRG (USED W/STOP LP SW LABELED 10200426, MATES W/2-WAY&4-WAY CONN) (ON VEHS W/O DAYTIME RUN LPS, SPLICE CAV D&E TOGETHER @ BLUE 8-WAY DRL MDL CONN) .	95	F67 (M30) (2ND DES) ..	1	12145761
3-B10	2.480	**HARNESS**, I/P WRG (USED W/STOP LP SW LABELED 10200426, MATES W/2-WAY&4-WAY CONN) (ON VEHS W/O DAYTIME RUN LPS, SPLICE CAV D&E TOGETHER @ BLUE 8-WAY DRL MDL CONN) .	95	F67 (MM6, M49) (2ND DES)	1	12145763
3-B10	2.480	**HARNESS**, I/P WRG (USED W/STOP LP SW LABELED 10194425, MATES W/2-WAY&3-WAY CONN) (ON VEHS W/O DAYTIME RUN LPS, SPLICE CAV D&E TOGETHER @ BLUE 8-WAY DRL MDL CONN) .	95	F87 (M30, UQ0) (1ST DES)	1	12145206

cardiagn.com

3–B10	2.480	**HARNESS**, I/P WRG (USED W/STOP LP SW LABELED 10194425, MATES W/2–WAY&3–WAY CONN) (ON VEHS W/O DAYTIME RUN LPS, SPLICE CAV D&E TOGETHER @ BLUE 8–WAY DRL MDL CONN) .	95	F87 (MM6, M49, UQ0) (1ST DES)	1	12145208
3–B10	2.480	**HARNESS**, I/P WRG (USED W/STOP LP SW LABELED 10194425, MATES W/2–WAY&3–WAY CONN) (ON VEHS W/O DAYTIME RUN LPS, SPLICE CAV D&E TOGETHER @ BLUE 8–WAY DRL MDL CONN) .	95	F87 (M30, U65) (1ST DES)	1	12145210
3–B10	2.480	**HARNESS**, I/P WRG (USED W/STOP LP SW LABELED 10194425, MATES W/2–WAY&3–WAY CONN) (ON VEHS W/O DAYTIME RUN LPS, SPLICE CAV D&E TOGETHER @ BLUE 8–WAY DRL MDL CONN) .	95	F87 (MM6, M49, U65) (1ST DES)	1	12145212
3–B10	2.480	**HARNESS**, I/P WRG (USED W/STOP LP SW LABELED 10200426, MATES W/2–WAY&4–WAY CONN) (ON VEHS W/O DAYTIME RUN LPS, SPLICE CAV D&E TOGETHER @ BLUE 8–WAY DRL MDL CONN) .	95	F87 (M30, UQ0) (2ND DES)	1	12145741
3–B10	2.480	**HARNESS**, I/P WRG (USED W/STOP LP SW LABELED 10200426, MATES W/2–WAY&4–WAY CONN) (ON VEHS W/O DAYTIME RUN LPS, SPLICE CAV D&E TOGETHER @ BLUE 8–WAY DRL MDL CONN) .	95	F87 (MM6, M49, UQ0) (2ND DES)	1	12145743
3–B10	2.480	**HARNESS**, I/P WRG (USED W/STOP LP SW LABELED 10200426, MATES W/2–WAY&4–WAY CONN) (ON VEHS W/O DAYTIME RUN LPS, SPLICE CAV D&E TOGETHER @ BLUE 8–WAY DRL MDL CONN)	95	F87 (M30, U65) (2ND DES)	1	12145745
3–B10	2.480	**HARNESS**, I/P WRG (USED W/STOP LP SW LABELED 10200426, MATES W/2–WAY&4 - WAY CONN) (ON VEHS W/O DAYTIME RUN LPS, SPLICE CAV D&E TOGETHER @ BLUE 8–WAY DRL MDL CONN) .	95	F87 (MM6, M49, U65) (2ND DES)	1	12145747
3–B10	2.480	**HARNESS**, I/P WRG	93	F (MD8, UQ0, Z49) (EXPORT)	1	12141689
	DISCON	**HARNESS**, I/P WRG	93	F (M28, M29, M49, UQ0, Z49) (EXPORT) ..	1	12141690
	DISCON	**HARNESS**, I/P WRG	93	F (MD8, U82, Z49) (EXPORT)	1	12141691
	DISCON	**HARNESS**, I/P WRG	93	F (M28, M29, M49, U82, Z49) (EXPORT) ...	1	12141692

cardiagn.com

	DISCON	HARNESS, I/P WRG	93	F87 (AC3, UD6, U82) (EXPORT)	1	12140659
3-B10	2.480	HARNESS, I/P WRG	94	F67 (UD6) (EXPORT) ..	1	12145379
3-B10	2.480	HARNESS, I/P WRG	94	F67 (UD4, U62) (EXPORT)	1	12145380
	DISCON	HARNESS, I/P WRG	94	F87 (UD4, UD6, U82) (EXPORT)	1	12145388
3-B10	2.480	HARNESS, I/P WRG	94	F87 (M30, U82, Z49) (EXPORT)	1	12153618
3-B10	2.480	HARNESS, I/P WRG	94	F87 (UD6, U82) (EXPORT)	1	12153684
3-B10	2.480	HARNESS, I/P WRG	94	FP87 (UD4, U62) (EXPORT)	1	12145390
	DISCON	HARNESS, I/P WRG	95	F87 (UD6, U65) (EXC NW9) (EXPORT)	1	12145238
3-B10	2.480	HARNESS, I/P WRG	97	F67 (M30, T72) (EXPORT)	1	12145644
3-B10	2.480	HARNESS, I/P WRG	97	F67 (M30, UD4) (EXC NW9) (EXPORT)	1	12145645
3-B10	2.480	HARNESS, I/P WRG	98	F67 (M30, T72) (EXPORT)	1	12177574
3-B10	2.480	HARNESS, I/P WRG	98	F67 (M30, UD4) (EXC NW9) (EXPORT)	1	12177575
3-B10	2.480	HARNESS, I/P WRG	98	F67 (M30, T79) (EXPORT)	1	12177631
3-B10	2.480	HARNESS, I/P WRG	98	F67 (MM6, M49, T79) (EXPORT)	1	12177632
3-B10	2.480	HARNESS, I/P WRG	98	F87 (M30, T72, UZ7) (EXPORT)	1	12177582
3-B10	2.480	HARNESS, I/P WRG	98	F87 (M30, UD4, UZ7) (EXC NW9) (EXPORT) .	1	12177583
3-B10	2.480	HARNESS, I/P WRG	98	F87 (MM6, M49, T72, UZ7) (EXC NW9) (EXPORT)	1	12177584
3-B10	2.480	HARNESS, I/P WRG	98	F87 (M30, T79) (EXPORT)	1	12177633
3-B10	2.480	HARNESS, I/P WRG	98	F87 (MM6, M49, T79) (EXPORT)	1	12177634
3-B10	2.480	HARNESS, I/P WRG	99	FP67 (M30, T72) (EXPORT)	1	12177705
3-B10	2.480	HARNESS, I/P WRG	99	FP67 (M30, UD4) (EXC NW9) (EXPORT)	1	12177706
3-B10	2.480	HARNESS, I/P WRG	99	FP67 (M30, T79) (EXPORT)	1	12177709
3-B10	2.480	HARNESS, I/P WRG	99	FP67 (MM6, M49, T79, U59) (EXPORT)	1	12177710
3-B10	2.480	HARNESS, I/P WRG	99	FP87 (M30, T79) (EXPORT)	1	12177711
3-B10	2.480	HARNESS, I/P WRG	99	FP87 (MM6, M49, T79) (EXPORT)	1	12177712
3-B10	2.480	HARNESS, I/P WRG	99	FP87 (M30, T72, UZ7) (EXPORT)	1	12177713
3-B10	2.480	HARNESS, I/P WRG	99	FP87 (M30, UD4, UZ7) (EXC NW9) (EXPORT) .	1	12177714
3-B10	2.480	HARNESS, I/P WRG	00-02	F67 (M30, T72) (EXPORT)	1	12177666
3-B10	2.480	HARNESS, I/P WRG	00-02	F67 (M30, UD4) (EXC NW9) (EXPORT)	1	12177667
3-B10	2.480	HARNESS, I/P WRG	00-02	F67 (M30, T79) (EXPORT)	1	12177670

cardiaqn.com

	3-B10	2.480	HARNESS, I/P WRG	00-02	F67 (MM6, M49, T79, U59) (EXPORT)	1	12177671
	3-B10	2.480	HARNESS, I/P WRG	00-02	F87 (M30, T79) (EXPORT)	1	12177672
	3-B10	2.480	HARNESS, I/P WRG	00-02	F87 (MM6, M49, T79) (EXPORT)	1	12177673
	3-B10	2.480	HARNESS, I/P WRG	00-02	F87 (M30, T72, UZ7) (EXPORT)	1	12177674
	3-B10	2.480	HARNESS, I/P WRG	00-02	F87 (M30, UD4, UZ7) (EXC NW9) (EXPORT) .	1	12177675
	3-B10	2.480	HARNESS, I/P WRG (ON VEH INITIALLY W/O WIRE IN CAV B4 OF INLINE TO FWD LP CONN BLK, CUT RED 12GA WIRE @ CAV B4 & SPLICE TO RED 10GA WIRE @ CAV C2)	96	F87 (M30, UD4, U62) (EXC NW9, UA6) (EXPORT)	1	12177448
	3-B10	2.480	HARNESS, I/P WRG (USE W/STOP LP SW LABELED 10194425 (MATES W/2-WAY & 3-WAY CONN)	95	F67 (UD6) (1ST DES) (EXPORT)	1	12145230
		DISCON	HARNESS, I/P WRG (USE W/STOP LP SW LABELED 10194425 (MATES W/2-WAY & 3-WAY CONN)	95	F67 (UD4) (1ST DES) (EXPORT)	1	12145406
	3-B10	2.480	HARNESS, I/P WRG (USE W/STOP LP SW LABELED 10200426 (MATES W/2-WAY & 4-WAY CONN)	95	F67 (UD6) (2ND DES) (EXPORT)	1	12145765
	3-B10	2.480	HARNESS, I/P WRG (USE W/STOP LP SW LABELED 10200426 (MATES W/2-WAY & 4-WAY CONN)	95	F67 (UD4) (2ND DES) (EXPORT)	1	12145766
	3-B10	2.480	HARNESS, I/P WRG (USE W/STOP LP SW LABELED 10194425 (MATES W/2-WAY & 3-WAY CONN)	95	F87 (UD6, U65) (1ST DES) (EXPORT)	1	12145239
	3-B10	2.480	HARNESS, I/P WRG (USE W/STOP LP SW LABELED 10194425 (MATES W/2-WAY & 3-WAY CONN)	95	F87 (UD4, U62) (EXC NW9) (1ST DES) (EXPORT)	1	12145283
	3-B10	2.480	HARNESS, I/P WRG (USE W/STOP LP SW LABELED 10200426 (MATES W/2-WAY & 4-WAY CONN)	95	F87 (UD6, U65) (2ND DES) (EXPORT)	1	12145775
	3-B10	2.480	HARNESS, I/P WRG (USE W/STOP LP SW LABELED 10200426 (MATES W/2-WAY & 4-WAY CONN)	95	F87 (UD4, U62) (EXC NW9) (2ND DES) (EXPORT)	1	12145776
2.		DISCON	HARNESS, CROSSBODY & FRT S/D WRG	93	F (D35, UQ0) (EXC AU3, A31)	1	12106647
		DISCON	HARNESS, CROSSBODY & FRT S/D WRG	93	F (AU3, A31, DG7, UQ0)	1	12154435
		DISCON	HARNESS, CROSSBODY & FRT S/D WRG	93	F (AU3, D35, UO0) (EXC A31)	1	12154435
	3-N21	13.090	HARNESS, CROSSBODY & FRT S/D WRG	93	F (AU3, A31, DD9, DG7, U82)	1	12154557
	3-N21	13.090	HARNESS, CROSSBODY & FRT S/D WRG	93	F (AU3, D35, U82) (EXC A31)	1	12154557

cardiagn.com

3-N21	13.090	HARNESS, CROSSBODY & FRT S/D WRG	93	F (D35, U82) (EXC AU3, A31)	1	12154557
	DISCON	HARNESS, CROSSBODY & FRT S/D WRG	94	F (UQ0, U62)	1	12145874
3-N21	13.090	HARNESS, CROSSBODY & FRT S/D WRG	94-95	F (AU0, AU3, A31, DG7, UQ0, U62)	1	12145878
3-N21	13.090	HARNESS, CROSSBODY & FRT S/D WRG	94	F (LT1, D35, U82) (EXC AU3, A31)	1	12153693
3-N21	13.090	HARNESS, CROSSBODY & FRT S/D WRG	94	F (L32, D35, U82) (EXC AU3, A31)	1	12153693
3-N21	13.090	HARNESS, CROSSBODY & FRT S/D WRG	94-95	F (LT1, D35, UQ0, U62) (EXC AU3, A31)	1	12153694
3-N21	13.090	HARNESS, CROSSBODY & FRT S/D WRG	94-95	F (L32, D35, UQ0, U62) (EXC AU3, A31)	1	12153694
	DISCON	HARNESS, CROSSBODY & FRT S/D WRG	95	F (AU3, D35, UQ0, U62) (EXC A31)	1	12145874
	DISCON	HARNESS, CROSSBODY & FRT S/D WRG	95	F (L32, L36, D35, UQ0, U62) (EXC AU3)	1	12145874
3-N21	13.090	HARNESS, CROSSBODY & FRT S/D WRG	95	F (LT1, D35, U65) (EXC AU3, A31)	1	12153693
3-N21	13.090	HARNESS, CROSSBODY & FRT S/D WRG	95	F (L32, L36, D35, U65) (EXC AU3, A31)	1	12153693
3-N21	13.090	HARNESS, CROSSBODY & FRT S/D WRG	95	F (L36, D35, UQ0, U62) (EXC AU3, A31)	1	12153694
3-N21	13.090	HARNESS, CROSSBODY & FRT S/D WRG	96	F (D35, UQ0, U62) (EXC AU3, A31)	1	12145989
3-N21	13.090	HARNESS, CROSSBODY & FRT S/D WRG	96	F (D35, U65) (EXC AU3, A31)	1	12145990
3-N21	13.090	HARNESS, CROSSBODY & FRT S/D WRG	96	F (AU3, A31, DD9, DG7, UQ3, U62)	1	12145993
3-N21	13.090	HARNESS, CROSSBODY & FRT S/D WRG	96	F (AU3, A31, DD9, DG7, U65)	1	12145994
3-N21	13.090	HARNESS, CROSSBODY & FRT S/D WRG	97	F (D35, UQ0, U62) (EXC AU3, A31)	1	12145893
3-N21	13.090	HARNESS, CROSSBODY & FRT S/D WRG	97	F (D35, UZ7) (EXC AU3, A31)	1	12145894
3-N21	13.090	HARNESS, CROSSBODY & FRT S/D WRG	97	F (AU3, A31, DD9, DG7, UQ0, U62)	1	12145897
3-N21	13.090	HARNESS, CROSSBODY & FRT S/D WRG	97	F (AU3, A31, DD9, DG7, UZ7)	1	12145898
3-N21	13.090	HARNESS, CROSSBODY & FRT S/D WRG	99-02	F (AU3, A31, DD9, DG7, UZ7, U59)	1	10305013
3-N21	13.090	HARNESS, CROSSBODY & FRT S/D WRG	99	F (D35, UQ0, U62) (EXC AU3, A31)	1	12177636
3-N21	13.090	HARNESS, CROSSBODY & FRT S/D WRG	99	F (AU3, A31, DD9, DG7, UQ0, U62)	1	12177640
3-N21	13.090	HARNESS, CROSSBODY & FRT S/D WRG	99	F (AU3, D35, UZ7, U59) (EXC A31)	1	12177645
3-N21	13.090	HARNESS, CROSSBODY & FRT S/D WRG	00-02	F (D35, UQ0) (EXC AU3, A31)	1	12177636
3-N21	13.090	HARNESS, CROSSBODY & FRT S/D WRG	00-02	F (AU3, A31, DD9, DG7, UQ0)	1	12177640
3-N21	13.090	HARNESS, CROSSBODY & FRT S/D WRG	01-02	F (AU3, A31, DD9, DG7, UQ0)	1	10305009
3-N21	13.090	HARNESS, CROSSBODY & FRT S/D WRG	01-02	F (D35, UQ0) (EXC AU3, A31)	1	10305011
3-N21	13.090	HARNESS, CROSSBODY & FRT S/D WRG	01-02	F (D35, UZ7, U59, DD9)	1	10305012

cardiagn.com

	3--N21	13.090	**HARNESS**, CROSSBODY & FRT S/D WRG (USE ON VEHS W/DR JAM SW, FOR 2ND DES SEE 12177636)	98	F (D35, UQ0, U62) (EXC AU3, A31) (1ST DES)	1	12145893
	3--N21	13.090	**HARNESS**, CROSSBODY & FRT S/D WRG (USE ON VEHS W/DR JAM SW, FOR 2ND DES SEE 12177637)	98	F (D35, UZ7) (EXC AU3, A31) (1ST DES)	1	12145894
	3--N21	13.090	**HARNESS**, CROSSBODY & FRT S/D WRG (USE ON VEHS W/DR JAM SW, FOR 2ND DES SEE 12177640)	98	F (AU3, A31, DD9, DG7, UQ0, U62) (1ST DES)	1	12145897
	3--N21	13.090	**HARNESS**, CROSSBODY & FRT S/D WRG (USE ON VEHS W/DR JAM SW, FOR 2ND DES SEE 12177641)	98	F (AU3, D35, UZ7) (EXC A31) (1ST DES)	1	12145898
	3--N21	13.090	**HARNESS**, CROSSBODY & FRT S/D WRG (USE ON VEHS W/MINI WEDGE DR LK SYS W/O DR JAM SW, FOR 1ST DES SEE 12145893)	98	F (D35, UQ0, U62) (EXC AU3, A31) (2ND DES)	1	12177636
	3--N21	13.090	**HARNESS**, CROSSBODY & FRT S/D WRG (USE ON VEHS W/MINI WEDGE DR LK SYS W/O DR JAM SW, FOR 1ST DES SEE 12145894)	98	F (D35, UZ7) (EXC AU3, A31) (2ND DES)	1	12177637
	3--N21	13.090	**HARNESS**, CROSSBODY & FRT S/D WRG (USE ON VEHS W/MINI WEDGE DR LK SYS W/O DR JAM SW, FOR 1ST DES SEE 12145895)	98	F (AU3, A31, DD9, DG7, UQ0, U62) (2ND DES)	1	12177640
	3--N21	13.090	**HARNESS**, CROSSBODY & FRT S/D WRG (USE ON VEHS W/MINI WEDGE DR LK SYS W/O DR JAM SW, FOR 1ST DES SEE 12145895)	98	F (AU3, D35, UQ0, U62) (EXC A31) (2ND DES)	1	12177640
	3--N21	13.090	**HARNESS**, CROSSBODY & FRT S/D WRG (USE ON VEHS W/MINI WEDGE DR LK SYS W/O DR JAM SW, FOR 1ST DES SEE 12145896)	98	F (AU3, D35, UZ7) (EXC A31) (2ND DES)	1	12177641
		DISCON	**HARNESS**, CROSSBODY & FRT S/D WRG	93	F (AU3, A31, DD9, DG7, UQ0) (EXPORT)	1	12154435
	3--N21	13.090	**HARNESS**, CROSSBODY & FRT S/D WRG	94--95	F (AU0, AU3, A31, DD9, UQ0, U62) (EXPORT)	1	12145878
	3--N21	13.090	**HARNESS**, CROSSBODY & FRT S/D WRG	94	F (AU0, AU3, A31, DD9, DG7, U82) (EXPORT)	1	12145879
	3--N21	13.090	**HARNESS**, CROSSBODY & FRT S/D WRG	95	F (AU0, AU3, A31, DD9, DG7, UQ0, U62) (EXPORT)	1	12145878
	3--N21	13.090	**HARNESS**, CROSSBODY & FRT S/D WRG	95	F (AU0, AU3, A31, DD9, DG7, U65) (EXPORT)	1	12145879
3.	3--C21	2.694	**HARNESS**, HIGH MT S/LP WRG	93--97	F87	1	12145132
	3--C21	2.694	**HARNESS**, HIGH MT S/LP WRG	98--02	F87 (EXC T79)	1	12177551
	3--C21	2.694	**HARNESS**, HIGH MT S/LP WRG	98--02	F87 (T79) (EXPORT)	1	12177635
4.	3--N21	13.090	**HARNESS**, BODY RR WRG	93--96	F (EXC T90)	1	12090103

cardiagn.com

	3-N21	13.090	HARNESS, BODY RR WRG (12177555 T/W 4 OF 9441839 REPLS 12145738)	97	F	1	12177555
	3-N21	13.090	HARNESS, BODY RR WRG	98-02	F (EXC T79)	1	12177556
	3-N21	13.090	HARNESS, BODY RR WRG	93-96	F (T90) (EXPORT)	1	12106691
	3-N21	13.090	HARNESS, BODY RR WRG	98-02	F (T79) (EXPORT)	1	12177400
5.	3-C23	2.714	HARNESS, RR LIC PLT & RR SI MKR LP WRG	93-96	F (EXC T90, UD6)	1	12145884
	3-C23	2.714	HARNESS, RR LIC PLT & RR SI MKR LP WRG	97	F (EXC T90, T72)	1	12145884
	3-C23	2.714	HARNESS, RR LIC PLT & RR SI MKR LP WRG	98-02	F (EXC T72, T79)	1	12145884
	3-C23	2.714	HARNESS, RR LIC PLT & RR SI MKR LP WRG	93-96	F (T90) (EXPORT)	1	12145885
	3-C23	2.714	HARNESS, RR LIC PLT & RR SI MKR LP WRG	97-02	F (T72) (EXPORT)	1	12145887
	3-C23	2.714	HARNESS, RR LIC PLT & RR SI MKR LP WRG	98-02	F (T79) (EXPORT)	1	12145886
6.	3-N12	4.720	HARNESS, RR WHL SPD SEN WRG	93-94	F	1	12106689
	3-N12	4.720	HARNESS, RR WHL SPD SEN WRG	95-97	F (EXC NW9)	1	12106689
	3-N12	4.720	HARNESS, RR WHL SPD SEN WRG	98-02	F (LS1) (EXC NW9)	1	12177547
	3-N12	4.720	HARNESS, RR WHL SPD SEN WRG	98-02	F (L36)	1	12177547
7.	3-N9	3.887	HARNESS, CRCONT WRG	93	F (L32, M49)	1	12113914
	3-N9	3.887	HARNESS, CRCONT WRG	93	F (LT1, M28, M29, K34)	1	12113916
	3-N9	3.887	HARNESS, CRCONT WRG (TAPE BACK EXTRA CONN ON M30 APPLICATION)	94-95	F (L32, M49, K34)	1	12145111
	3-N9	3.887	HARNESS, CRCONT WRG (TAPE BACK EXTRA CONN ON M30 APPLICATION)	94-98	F (M30, K34)	1	12145111
	3-N9	3.887	HARNESS, CRCONT WRG	94-95	F (L32, M49) (EXC K34)	1	12145112
	3-N9	3.887	HARNESS, CRCONT WRG	94-97	F (LT1, MM6, K34)	1	12145113
	3-N9	3.887	HARNESS, CRCONT WRG (TAPE BACK EXTRA CONN ON M30 APPLICATION)	96-98	F (L36, M49, K34)	1	12145111
	3-N9	3.887	HARNESS, CRCONT WRG	96-98	F (L36, M49) (EXC K34)	1	12145112
	3-N9	3.887	HARNESS, CRCONT WRG	99	F (LS1, MM6, K34)	1	12145113
	3-N9	3.887	HARNESS, CRCONT WRG (TAPE BACK EXTRA CONN ON M30 APPLICATION)	99-02	F (LS1, M30, K34)	1	12145111
	3-N9	3.887	HARNESS, CRCONT WRG (TAPE BACK EXTRA CONN ON M30 APPLICATION)	99-02	F (L36, M30)	1	12145111
	3-N9	3.887	HARNESS, CRCONT WRG (TAPE BACK EXTRA CONN ON M30 APPLICATION)	99-02	F (MM6, K34)	1	12145111
	3-N9	3.887	HARNESS, CRCONT WRG (TAPE BACK EXTRA CONN ON M30 APPLICATION)	99-02	F (M49, K34)	1	12145111
8.	3-C4	2.525	HARNESS, ENG WRG	93	F (L32, MD8, C41)	1	12106616
	3-C4	2.525	HARNESS, ENG WRG	93	F (L32, MD8, C60) (EXC UD6)	1	12106618
	3-C4	2.525	HARNESS, ENG WRG	93	F (L32, M49, C41)	1	12145075

cardiagn.com

3-C4	2.525	HARNESS, ENG WRG	93	F (L32, M49, C60)	1	12145076
3-C4	2.525	HARNESS, ENG WRG	93	F (LT1, C60, MN6)	1	12145078
3-C4	2.525	HARNESS, ENG WRG	93	F (LT1, C41, MN6)	1	12145079
3-C4	2.525	HARNESS, ENG WRG	93	F (LT1, MD8, C41)	1	12145080
3-C4	2.525	HARNESS, ENG WRG	93	F (L32, C60) (EXC K34, T96)	1	12154283
3-C4	2.525	HARNESS, ENG WRG (USE ON VEHS W/3-WAY GRAY CONN TO OIL PRESS GAUGE SEN HAVING TAN LEAD)	94	F (L32, M49, C41)	1	12145190
3-C4	2.525	HARNESS, ENG WRG (USE ON VEHS W/3-WAY GRAY CONN TO OIL PRESS GAUGE SEN HAVING TAN LEAD)	94	F (L32, M30, C60) (EXC UD6)	1	12145191
3-C4	2.525	HARNESS, ENG WRG (USE ON VEHS W/3-WAY GRAY CONN TO OIL PRESS GAUGE SEN HAVING TAN LEAD)	94	F (L32, M49, C60)	1	12145192
3-C4	2.525	HARNESS, ENG WRG	94	F (LT1, M30, C60) (EXC UD6)	1	12145304
3-C4	2.525	HARNESS, ENG WRG	94	F (LT1, C60, MN6)	1	12145305
3-C4	2.525	HARNESS, ENG WRG	94	F (LT1, C41, MN6)	1	12145306
3-C4	2.525	HARNESS, ENG WRG	94	F (LT1, M30, C41)	1	12145308
3-C4	2.525	HARNESS, ENG WRG (USE ON VEHS W/2-WAY CONN TO OIL PRESS GAUGE SEN HAVING TAN LEAD &BLACK/WHITE STRIPED LEAD)	94	F (L32, M49, C41)	1	12145349
3-C4	2.525	HARNESS, ENG WRG (USE ON VEHS W/2-WAY CONN TO OIL PRESS GAUGE SEN HAVING TAN LEAD &BLACK/WHITE STRIPED LEAD)	94	F (L32, M30, C60) (EXC UD6)	1	12145350
3-C4	2.525	HARNESS, ENG WRG (USE ON VEHS W/2-WAY CONN TO OIL PRESS GAUGE SEN HAVING TAN LEAD & BLACK & WHITE STRIPED LEAD)	94	F (L32, M49, C60)	1	12145351
3-C4	2.525	HARNESS, ENG WRG	95	F (LT1, M30, C60) (EXC UD6)	1	12145173
3-C4	2.525	HARNESS, ENG WRG	95	F (LT1, C60, MN6)	1	12145174
3-C4	2.525	HARNESS, ENG WRG	95	F (LT1, C41, MN6)	1	12145175
3-C4	2.525	HARNESS, ENG WRG	95	F (LT1, M30, C41)	1	12145177
3-C4	2.525	HARNESS, ENG WRG	95	F (L32, M30, C41)	1	12145178
3-C4	2.525	HARNESS, ENG WRG	95	F (L32, M30, C60) (EXC UD6)	1	12145179
3-C4	2.525	HARNESS, ENG WRG	95	F (L32, M49, C60)	1	12145337
3-C4	2.525	HARNESS, ENG WRG	95	F (L32, M49, C41)	1	12145338
3-C4	2.525	HARNESS, ENG WRG	95	F (L36, M30, C60)	1	12145902
3-C4	2.525	HARNESS, ENG WRG	96	F (LT1, MM6, C60)	1	12145344
3-C4	2.525	HARNESS, ENG WRG	96	F (LT1, M30, C60)	1	12145346
3-C4	2.525	HARNESS, ENG WRG	96	F (L36, M49, C60)	1	12177326
3-C4	2.525	HARNESS, ENG WRG	96	F (L36, M49, C41)	1	12177451
3-C4	2.525	HARNESS, ENG WRG	96	F (L36, M30, C60, UD6)	1	12177453
3-C4	2.525	HARNESS, ENG WRG	96	F (L36, M30, C60) (EXC UD6)	1	12177454
3-C4	2.525	HARNESS, ENG WRG	97	F (L36, M30, C60) (EXC	1	12145606

cardiagn.com

	3-C4	2.525	HARNESS, ENG WRG	97	F (L36, M49, C60) (EXC ABN)	1	12145607
	3-C4	2.525	HARNESS, ENG WRG	97	F (L36, M30, C60, UD6)	1	12145609
	3-C4	2.525	HARNESS, ENG WRG	97	F (LT1, M30, C60)	1	12145826
	3-C4	2.525	HARNESS, ENG WRG	97	F (LT1, MM6, C60)	1	12145827
	3-C4	2.525	HARNESS, ENG WRG	98	F (LS1, M30, C60)	1	12177560
	3-C4	2.525	HARNESS, ENG WRG	98	F (LS1, MM6, C60)	1	12177561
	3-C4	2.525	HARNESS, ENG WRG	98	F (L36, M30, C60)	1	12177562
	3-C4	2.525	HARNESS, ENG WRG	98	F (L36, M49, C60)	1	12177563
	3-C4	2.525	HARNESS, ENG WRG	99	F (L36, M30)	1	12177365
	3-C4	2.525	HARNESS, ENG WRG	99	F (L36, M49)	1	12177366
	3-C4	2.525	HARNESS, ENG WRG	99-02	F (LS1, M30)	1	12177652
	3-C4	2.525	HARNESS, ENG WRG	99-02	F (LS1, MM6)	1	12177653
	3-C4	2.525	HARNESS, ENG WRG	00-02	F (L36, M30)	1	12177654
	3-C4	2.525	HARNESS, ENG WRG	00-02	F (L36, M49)	1	12177655
	3-C4	2.525	HARNESS, ENG WRG (INCLS ECM WRG)	93	F (LT1, MD8, C60) (EXC UD6)	1	12145077
	3-C4	2.525	HARNESS, ENG WRG (OVER TEMP PROBE)	93	F (LT1, MD8, C60)	1	12145185
	3-C4	2.525	HARNESS, ENG WRG	93	F (L32, MD8, C60, UD6) (EXPORT)	1	12106674
	3-C4	2.525	HARNESS, ENG WRG (USE ON VEHS W/3-WAY GRAY CONN TO OIL PRESS GAUGE SEN HAVING TAN LEAD)	94	F (L32, M30, C60, UD6) (EXPORT)	1	12145193
	3-C4	2.525	HARNESS, ENG WRG	94	F (LT1, M30, C60, UD6) (EXPORT)	1	12145307
	3-C4	2.525	HARNESS, ENG WRG (USE ON VEHS W/2-WAY CONN TO OIL PRESS GAUGE SEN HAVING TAN LEAD &BLACK & WHITE STRIPED LEAD)	94	F (L32, M30, C60, UD6) (EXPORT)	1	12145352
	3-C4	2.525	HARNESS, ENG WRG	95	F (LT1, M30, C60, UD6) (EXPORT)	1	12145176
	3-C4	2.525	HARNESS, ENG WRG	95	F (L32, M30, C60, UD6) (EXPORT)	1	12145180
	3-C4	2.525	HARNESS, ENG WRG (OVER TEMP PROBE)	93	F (LT1, MD8, C60, UD6) (EXPORT)	1	12145185
9.	3-N12	4.720	HARNESS, FRT WHL SPD SEN WRG (PART OF 10)	93-94	F	2	12145049
	3-N12	4.720	HARNESS, FRT WHL SPD SEN WRG (PART OF 10)	95-97	F	2	12145732
	3-N12	4.720	HARNESS, FRT WHL SPD SEN WRG (PART OF 10) (845 MM LONG)	98	F	2	12177333
	3-N12	4.720	HARNESS, FRT WHL SPD SEN WRG (PART OF 10) (700 MM LONG)	00-02	F	2	12177650
	3-N12	4.720	HARNESS, FRT WHL SPD SEN WRG (FOR 1ST DES SEE 12177333) (PART OF 10) (700 MM LONG)	99	F (2ND DES)	2	12177650
	3-N12	4.720	HARNESS, FRT WHL SPD SEN WRG (FOR 2ND DES SEE 12177650) (PART OF 10) (845 MM LONG)	99	F (1ST DES)	2	12177333
10.	3-B10	2.480	HARNESS, FWD LP WRG (INCL 9)	93	F (L32, C41) (EXC K34, T96)	1	12154230

cardiagn.com

3-B10	2.480	HARNESS, FWD LP WRG (INCL 9)	93	F (L32, C60) (EXC T39)	1	12154230
3-B10	2.480	HARNESS, FWD LP WRG (INCL 9)	94	F (C41) (EXC K34, T96)	1	12145286
3-B10	2.480	HARNESS, FWD LP WRG (INCL 9)	94	F (LT1, C60) (EXC T39, Z49)	1	12145286
3-B10	2.480	HARNESS, FWD LP WRG (INCL 9)	94	F (L32, C60) (EXC T39)	1	12145286
3-B10	2.480	HARNESS, FWD LP WRG (INCL 9)	95	F (L36, C60) (EXC T39)	1	12145197
3-B10	2.480	HARNESS, FWD LP WRG (INCL 9) (HAS WIRE IN CAV B4 OF INLINE TO FWD LP CONN BLK)	96	F (L36, C60) (EXC T39)	1	12177339
3-B10	2.480	HARNESS, FWD LP WRG (INCL 9) (HAS WIRE IN CAV B4 OF INLINE TO FWD LP CONN BLK)	96	F (LT1, C60, K34, NW9, T96) (EXC T39)	1	12177340
3-B10	2.480	HARNESS, FWD LP WRG (INCL 9) (HAS WIRE IN CAV B4 OF INLINE TO FWD LP CONN BLK)	96	F (LT1, C60, K34, T96) (EXC NW9, T39)	1	12177343
3-B10	2.480	HARNESS, FWD LP WRG (INCL 9)	97	F (L36) (EXC K34, T96)	1	12177498
3-B10	2.480	HARNESS, FWD LP WRG (INCL 9)	97	F (L36, C60, K34, T96) (EXC T39, T90)	1	12177499
3-B10	2.480	HARNESS, FWD LP WRG (INCL 9)	97	F (L36, C60, K34, T39, T90, T96)	1	12177500
3-B10	2.480	HARNESS, FWD LP WRG (INCL 9)	97	F (LT1, C60, K34, NW9, T96) (EXC T39, T90)	1	12177501
3-B10	2.480	HARNESS, FWD LP WRG (INCL 9)	97	F (LT1, C60, K34, NW9, T39, T96)	1	12177502
3-B10	2.480	HARNESS, FWD LP WRG (INCL 9)	97	F (LT1, C60) (EXC K34, NW9, T96)	1	12177503
3-B10	2.480	HARNESS, FWD LP WRG (INCL 9)	97	F (LT1, C60, K34, T96) (EXC NW9, T39)	1	12177504
3-B10	2.480	HARNESS, FWD LP WRG (INCL 9)	97	F (LT1, C60, K34, T39, T96) (EXC NW9)	1	12177521
3-B10	2.480	HARNESS, FWD LP WRG (INCL 9)	98	F (L36) (EXC K34, T96)	1	12177720
3-B10	2.480	HARNESS, FWD LP WRG (INCL 9)	98	F (L36, C60, K34, T96) (EXC T39, T65, WX7)	1	12177721
3-B10	2.480	HARNESS, FWD LP WRG (INCL 9)	98	F (L36)	1	12177724
3-B10	2.480	HARNESS, FWD LP WRG (INCL 9)	98	F (LS1, C60) (EXC K34, NW9, T96)	1	12177725
3-B10	2.480	HARNESS, FWD LP WRG (INCL 9)	98	F (LS1, C60, K34, T96) (EXC NW9, T39, T65, WX7)	1	12177726
3-B10	2.480	HARNESS, FWD LP WRG (INCL 9)	98	F (LS1, C60, K34, NW9, T96) (EXC T39, T65, WX7)	1	12177727
3-B10	2.480	HARNESS, FWD LP WRG (INCL 9)	99	F (L36, K34, T39, T65, WX7) (EXC NW9, T96)	1	12177377
3-B10	2.480	HARNESS, FWD LP WRG (INCL 9)	99	F (L36, K34, T96) (EXC NW9, T39, T65, WX7)	1	12177736
3-B10	2.480	HARNESS, FWD LP WRG (INCL 9)	99	F (L36, K34, NW9, T39, T96) (EXC T65, WX7)	1	12177738
3-B10	2.480	HARNESS, FWD LP WRG (INCL 9)	99	F (L36, K34, T39, T96) (EXC NW9, T65, WX7)	1	12177739

cardiagn.com

3-B10	2.480	HARNESS, FWD LP WRG (INCL 9)	99	F (L36, K34, NW9, T39, T65, WX7) (EXC T96)	1	12177742
3-B10	2.480	HARNESS, FWD LP WRG (INCL 9)	99	F (LS1) (EXC K34, NW9, T96)	1	12177744
3-B10	2.480	HARNESS, FWD LP WRG (INCL 9)	99	F (LS1, K34, T96) (EXC NW9, T39, T65, WX7)	1	12177745
3-B10	2.480	HARNESS, FWD LP WRG (INCL 9)	99	F (LS1, K34, NW9, T96) (EXC T39, T65, WX7)	1	12177746
3-B10	2.480	HARNESS, FWD LP WRG (INCL 9)	99	F (LS1, K34, NW9, T39, T96) (EXC T65, WX7)	1	12177747
3-B10	2.480	HARNESS, FWD LP WRG (INCL 9)	99	F (LS1, K34, NW9, T39, WX7) (EXC T65, T96)	1	12177748
3-B10	2.480	HARNESS, FWD LP WRG (INCL 9)	99	F (LS1, K34, NW9, T39, T65, WX7) (EXC T96)	1	12177749
3-B10	2.480	HARNESS, FWD LP WRG (INCL 9)	00-02	F (L36, K34)	1	12177605
3-B10	2.480	HARNESS, FWD LP WRG (INCL 9)	00-02	F (L36, NW9) (EXC T39, T65, WX7)	1	12177606
3-B10	2.480	HARNESS, FWD LP WRG (48WAY BOLT TORQ TO S8.0+/-1.0NM) (INCL 9)	95	F (LT1, C41, NW9) (EXC K34, T96)	1	12145705
3-B10	2.480	HARNESS, FWD LP WRG (48WAY BOLT TORQ TO S8.0+/-1.0NM) (INCL 9)	95	F (L32, C41) (EXC K34, T96)	1	12145909
3-B10	2.480	HARNESS, FWD LP WRG (48WAY BOLT TORQ TO S8.0+/-1.0NM) (INCL 9)	95	F (L32, C60) (EXC K34)	1	12145911
3-B10	2.480	HARNESS, FWD LP WRG (48WAY BOLT TORQ TO S8.0+/-1.0NM) (INCL 9)	95	F (L32, C60, K34, T96) (EXC T39)	1	12145912
3-B10	2.480	HARNESS, FWD LP WRG (48WAY BOLT TORQ TO S8.0+/-1.0NM) (INCL 9)	95	F (LT1, C41) (EXC K34, NW9, T96)	1	12145915
3-B10	2.480	HARNESS, FWD LP WRG (48WAY BOLT TORQ TO S8.0+/-1.0NM) (USE ON VEH HAVING HARN LABELED 5707, 5916, 5919&5920) (INCL 9)	95	F (LT1, C60) (EXC K34)	1	12145916
3-B10	2.480	HARNESS, FWD LP WRG (48WAY BOLT TORQ TO S8.0+/-1.0NM) (USE ON VEH HAVING HARN LABELED 5708, 5917&5923) (INCL 9)	95	F (LT1, C60, K34, T96) (EXC T39)	1	12145917
3-B10	2.480	HARNESS, FWD LP WRG (48WAY BOLT TORQ TO S8.0+/-1.0NM) (INCL 9)	95	F (LT1, C60, T96) (EXC K34, NW9)	1	12145922
3-B10	2.480	HARNESS, FWD LP WRG (INCL 9)	93	F (C60, K34, T39) (EXPORT)	1	12153885
3-B10	2.480	HARNESS, FWD LP WRG (INCL 9)	94	F (C60, K34, T39) (EXPORT)	1	12145287
3-B10	2.480	HARNESS, FWD LP WRG (INCL 9) (48WAY BOLT TORQUE TO 8+/-1.0NM)	94	F (L32, C60, K34, T39) (EXPORT)	1	12145595
3-B10	2.480	HARNESS, FWD LP WRG (INCL 9) (HAS WIRE IN CAV#2 OF 17-WAY INLINE CONN TO I/P HARN)	95	F (LT1, C60, K34, NW9, T39, T96) (1ST DES) (EXPORT)	1	12145709

cardiagn.com

3-B10	2.480	HARNESS, FWD LP WRG (INCL 9) (WIRE IN CAV#2 OF 17-WAY INLINE CONN TO I/P HARN)	95	F (LT1, C60, K34, T39, T96) (EXC NW9) (1ST DES) (EXPORT)	1	12145712
3-B10	2.480	HARNESS, FWD LP WRG (INCL 9) (HAS WIRE IN CAV B4 OF INLINE TO FWD LP CONN BLK) .	96	F (LT1, C60, K34, NW9, T39, T96) (EXPORT) ...	1	12177341
3-B10	2.480	HARNESS, FWD LP WRG (INCL 9) (HAS WIRE IN CAV B4 OF INLINE TO FWD LP CONN BLK) .	96	F (L36, C60, K34, T39) (EXPORT)	1	12177355
3-B10	2.480	HARNESS, FWD LP WRG (INCL 9)	98	F (LS1, C60, K34, NW9, T39, WX7) (EXC T65, T96) (EXPORT)	1	12145855
3-B10	2.480	HARNESS, FWD LP WRG (INCL 9)	98	F (LS1, C60, K34, NW9, T39, T65, WX7) (EXC T96) (EXPORT)	1	12145856
3-B10	2.480	HARNESS, FWD LP WRG (INCL 9)	98	F (LS1, C60, K34, T39, T96) (EXC NW9, T65, WX7) (EXPORT)	1	12177519
3-B10	2.480	HARNESS, FWD LP WRG (INCL 9)	98	F (L36, C60, K34, T39, T96) (EXC T65, WX7) (EXPORT)	1	12177722
3-B10	2.480	HARNESS, FWD LP WRG (INCL 9)	98	F (LS1, C60, K34, NW9, T39, T96) (EXC T65, WX7) (EXPORT)	1	12177728
3-B10	2.480	HARNESS, FWD LP WRG (INCL 9)	99	F (LS1, K34, T39, T96) (EXC NW9, T65, WX7) (EXPORT)	1	12177520
3-B10	2.480	HARNESS, FWD LP WRG (INCL 9) (48-WAY)	00-02	F (L36, K34, NW9, T39, T96) (EXC T65, WX7) (EXPORT)	1	12177607
3-B10	2.480	HARNESS, FWD LP WRG (INCL 9)	00	F (L36, K34, T39, T96) (EXC NW9, T65, WX7) (EXPORT)	1	12177608
3-B10	2.480	HARNESS, FWD LP WRG (INCL 9)	00-02	F (L36, K34, NW9, T39, WX7) (EXC T65, T96) (EXPORT)	1	12177609
3-B10	2.480	HARNESS, FWD LP WRG (INCL 9)	00-02	F (L36, K34, NW9, T39, T65, WX7) (EXC T96) (EXPORT)	1	12177611
3-B10	2.480	HARNESS, FWD LP WRG (INCL 9)	00-02	F (LS1) (EXC NW9, T39, T65, WX7) (EXPORT) ..	1	12177614
3-B10	2.480	HARNESS, FWD LP WRG (INCL 9)	00-02	F (LS1, K34, NW9, T96) (EXPORT)	1	12177615
3-B10	2.480	HARNESS, FWD LP WRG (INCL 9)	00-02	F (LS1, K34, NW9, T39, T96) (EXC T65, WX7) (EXPORT)	1	12177616
3-B10	2.480	HARNESS, FWD LP WRG (INCL 9)	00-02	F (LS1, K34, NW9, T39, WX7) (EXC T65, T96) (EXPORT)	1	12177617
3-B10	2.480	HARNESS, FWD LP WRG (INCL 9)	00-02	F (LS1, K34, NW9, T39, T65, WX7) (EXC T96) (EXPORT)	1	12177618
3-B10	2.480	HARNESS, FWD LP WRG (48WAY BOLT TORQ TO S8.0+/-1.0NM) (INCL 9) (HAS WIRE IN CAV #2 OF 17-WAY INLINE CONN TO I/P HARN)	95	F (L32, C60, K34, T39) (1ST DES) (EXPORT) ..	1	12145704

cardiagn.com

	3-B10	2.480	HARNESS, FWD LP WRG (48WAY BOLT TORQ TO S8.0+/-1.0NM) (INCL 9) (W/O WIRE IN CAV#2 OF 17-WAY CONN)	95	F (L32, C60, K34, T39, T96) (2ND DES) (EXPORT)	1	12145913
	3-B10	2.480	HARNESS, FWD LP WRG (48WAY BOLT TORQ TO S8.0+/-1.0NM) (INCL 9) (W/O WIRE IN CAV#2 OF 17-WAY CONN)	95	F (LT1, C60, K34, NW9, T39, T96) (2ND DES) (EXPORT)	1	12145918
	3-B10	2.480	HARNESS, FWD LP WRG (48WAY BOLT TORQ TO S8.0+/-1.0NM) (INCL 9) (W/O WIRE IN CAV#2 OF 17-WAY CONN)	95	F (LT1, C60, K34, T39, T96) (EXC NW9) (2ND DES) (EXPORT)	1	12145921
11.	3-B4	2.383	HARNESS, DISTR WRG	93	F (LT1)	1	12106559
	3-B4	2.383	HARNESS, DISTR WRG (DISTR CONN IS APPX 1" LG)	94	F (LT1) (1ST DES)	1	12106559
	3-B4	2.383	HARNESS, DISTR WRG (DISTR CONN IS APPX 2" LG)	94	F (LT1) (2ND DES) ...	1	12130319
	3-B4	2.383	HARNESS, DISTR WRG (JUMPER WIRE)	95-97	F (LT1)	1	12130319
	3-C4	2.525	HARNESS, F/INJR WRG	93-95	F (L32)	1	12106680

RPO DEFINITIONS
ABN - SENSOR OXYGEN NON-HEATED
AC3 - ADJUSTER,SEAT,6-WAY POWER,BUCKET,DRIVER
AU0 - LOCK CONTROL,REMOTE ENTRY(KEYLESS ENTRY SYSTEM)
AU0 - LOCK CONTROL,REMOTE ENTRY(KEYLESS ENTRY SYS)(INCL REM HATCH CTL)
AU3 - LOCK,SIDE DOOR,ELECTRIC
A31 - WINDOW,ELECTRIC OPERATED,SIDE
C41 - HEATER,OUTSIDE AIR,WITH FAN AND DEFROSTER
C60 - AIR CONDITIONER,FRONT,MANUAL CONTROLS
DD9 - MIRROR,O/S,RH & LH REM CTL ELEC,BREAKAWAY(PAINTED)(EXPORT)
DD9 - MIRROR,OUTSIDE,RH AND LH REMOTE CONTROL ELECTRIC,BREAKAWAY(PAINTED)
DG7 - MIRROR,OUTSIDE,RH AND LH REMOTE CONTROL,ELECTRIC(PAINTED)
D35 - MIRROR,O/S LH REM RH DIRECT CTL,PAINTED
ETA - HARNESS,INSTRUMENT PANEL,#1
K34 - CRUISE CONTROL,AUTOMATIC,ELECTRONIC
LS1 - ENGINE GAS, 8 CYL, 5.7L, SFI, ALUMINUM ENGINE
LT1 - ENGINE-GAS, 8 CYL, 5.7L(5.7P),MFI,HO
L32 - ENGINE,3.4L,V6,(3.4S),SFI,OHV
L36 - ENGINE GAS, 6 CYL, 3.8K, MFI, V6, HO (ERV6 SERIES)
MD8 - TRANSMISSION,AUTOMATIC 4-SPEED(THM700R4/4L60)
MM6 - TRANSMISSION MAN 6 SPD, BORG WARNER, 85MM, 1ST 2.66, 6TH 0.50, O/D
MN6 - TRANSMISSION,MANUAL 6-SPEED PROVISIONS(MERCHANDISING OPTION)
M28 - TRANSMISSION MAN, 6 SPD, BORG WARNER 85MM, 3.36 1ST, 1.35 3RD
M29 - TRANSMISSION MAN, 6 SPD, BORG WARNER, 85MM, 2.97 1ST, 1.44 3RD
M30 - TRANSMISSION,AUTOMATIC 4 SPEED,4L60E,ELECTRONIC
M49 - TRANSMISSION MAN 5 SPD, BORG WARNER, 77MM, 3.75 1ST, .76 5TH, O/D
NW9 - TRACTION CONTROL ELECTRONIC
T39 - LAMP,TURN SIGNAL,AUXILIARY(EXPORT)
T65 - LIGHTING DAYTIME RUNNING, EXPORT
T72 - HEADLAMPS,LH RULE OF THE ROAD(EXPORT)
T79 - LAMPS,REAR FOG(EXPORT)
T90 - LAMP,SIGNALING AND MARKER(EXPORT)
T96 - LAMP,FRONT FOG
UA6 - THEFT DETERRENT SYSTEM
UD4 - ALARM,VEHICLE SPEED(120 KPH)
UD6 - ALARM,EXHAUST TEMPERATURE(EXPORT)

cardiagn.com

UQ0 – SPEAKER SYSTEM,4,DUAL FRONT DOOR MOUNTED,DUAL STANDARD RANGE PACKAGE SHELF/QUARTER
UQ3 – SPEAKER SYSTEM,PERFORMANCE ENHANCED AUDIO
UZ7 – SPEAKER SYSTEM 8, QUAD FRT DR MTD, DUAL SAIL PNL, DUAL RR HATCH, AMPLIFIER
U59 – SPEAKER SYSTEM 8, QUAD FRT DR MTD, QUAD SAIL PNL, AMPLIFIER
U62 – SPEAKER SYSTEM,4,DUAL COAX FRONT,DUAL COAX PACKAGE SHELF
U65 – SPEAKER SYSTEM,5,DUAL FRT DR MTD,DUAL EXT RANGE SAIL PANEL,SINGLE RR COMPARTMENT
U82 – SPEAKER SYSTEM 3, DUAL DR MTD, RR PKG SHELF
WX7 – WIRING PROVISIONS
Z49 – MANDATORY CANADIAN BASE EQUIPMENT MODIFICATIONS(CANADIAN)

cardiagn.com

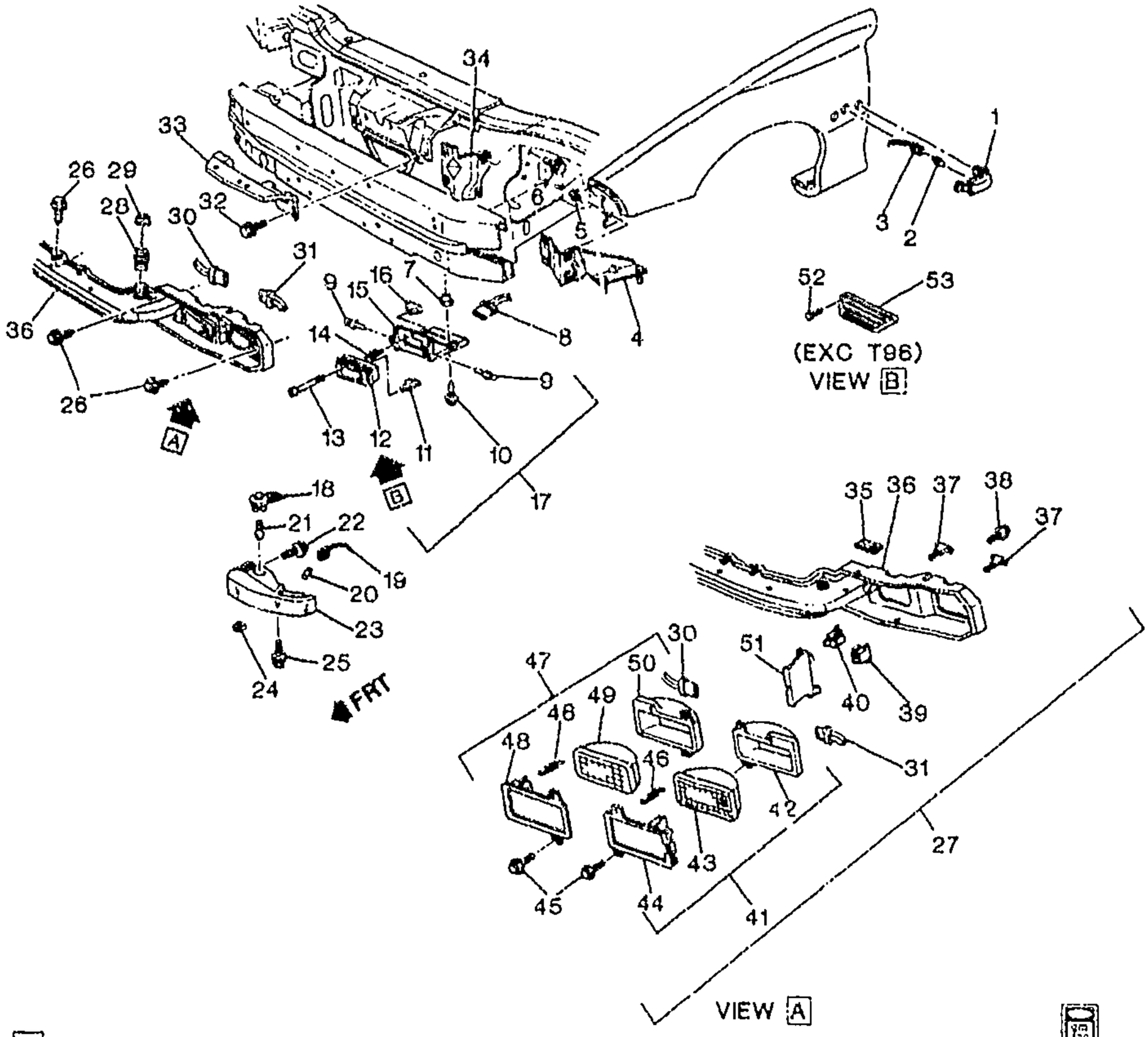

1F02-009

1993-1997 F LAMPS/FRONT

1.	3-C28	2.880	LAMP, AUX SI FRT T/SIG	93-97	F (T39) (EXPORT)	2	5977622
2.		8.991	TRADE#194, 12V, 2CP (T/SIG) (AC-DELCO #L194)	93-96	F (T39)	2	9421330
		8.991	BULB (W5W) (T/SIG)	97	F (T39)	2	9442399
3.	3-C20	2.595	SOCKET, FRT T/SIG LP ((AUX SI)) (W/LEADS) (AC-DELCO #LS44) (AUX SI)	93-97	F (T39) (EXPORT)	2	12141388
4.	3-N13	7.831	BRACKET, FRT BPR FASCIA OTR	93-97	F	RH	10182012
	3-N13	7.831	BRACKET, FRT BPR FASCIA OTR	93-97	F	LH	10182013
5.		8.900	BOLT, (FRT BPR FASCIA OTR)	93-97	F	2	20351035
6.		8.900	BOLT, HEX W/CON WA, M6X1X20 (HDLP HSG PNL SUPT)	93-97	F	4	11514623
7.	3-C24	2.726	NUT, FRT FOG LP	93-97	F (T96)	4	10228352

cardiagn.com

8.	3–C25	2.727	CONNECTOR, LP–FOG (BLACK 12085498) (2–WAY F W/LEADS) (USED ON FOG LAMPS W/ STRAIGHT TERMINALS 90DEG TERMS SEE) (2.535) (AC–DELCO #PT331)	93–97	F	2	12102664
9.	3–C24	2.726	RETAINER, FRT FOG LP (PART OF 17)	93–97	F (T96)	4	16514113
10.		8.900	BOLT, (FRT FOG LP)	93–97		4	20351036
11.	3–C25	2.727	BULB, FRT FOG LP (PART OF 17) (8.991) (AC–DELCO #885)	93–97	F (T96)	AR	9442878
12.	3–C23	2.725	LAMP, FRT FOG (PART OF 17)	93–97	F (T96)	LH	16519769
	3–C23	2.725	LAMP, FRT FOG (PART OF 17)	93–97	F (T96)	RH	16519770
13.	3–C26	2.737	BOLT, FRT FOG LP ADJR (PART OF 17) (1/2 X 5/64 X 29/64)	93–97	F (T96)	2	10031625
14.	3–C26	2.737	SPRING, FRT FOG LP ADJ (PART OF 17)	93–97	F (T96)	2	12337881
15.	3–C24	2.726	BRACKET, FRT FOG LP (PART OF 17)	93–97	F (T96)	2	16514250
16.	3–C26	2.737	NUT, FRT FOG LP ADJ (PART OF 17)	93–97	F (T96)	2	10030367
17.	3–C23	2.725	LAMP, FRT FOG (INCLS 9, 11–16)	93–97	(T96)	LH	16524929
	3–C23	2.725	LAMP, FRT FOG (INCLS 9, 11–16)	93–97	(T96)	RH	16524930
18.	3–C20	2.596	SOCKET, PARK & T/SIG LP (2.594) (AC–DELCO #LS54)	93–97	F	2	12159662
19.	3–C18	2.575	SOCKET, FRT SI MKR LP (W/LEADS) (2.596) (AC–DELCO #LS44)	93–97	F	2	12141383
20.		8.991	TRADE#194, 12V, 2CP (FRT SI MKR LP) (AC–DELCO #L194)	93–97	F (EXC T39)	2	9421330
21.		8.991	BULB, TRADE #2397 (PARK & T/SIG LP) (AC–DELCO #L2397)	93		2	9441855
		8.991	BULB, 12 VOLTS, 2.1 AMPS, 32 CP, TRADE NO.3057 (PARK & T/SIG LP (FOR LONG LIFE KRYPTON BULB USE 12450024)) (AC–DELCO #L3057)	94–97		2	9441839
22.		8.977	BOLT, SCR HEX W/FLAT WA 12 DIA TYPE AB (PARK LP)	93–97		4	11509374
23.	3–C19	2.585	LAMP, PARK & T/SIG (INCLS 24) (ALSO CHANGE SOC TO 12159662 & BULB TO 9441839)	93–97	F (EXC T39)	LH	5978551
	3–C19	2.585	LAMP, PARK & T/SIG (INCLS 24)	93–97	F (EXC T39)	RH	5978552
		DISCON	LAMP, PARK & T/SIG (INCLS 24)	93	F (T39) (EXPORT)	LH	5976515
	3–C19	2.585	LAMP, PARK & T/SIG (INCLS 24)	94–97	F (T39) (EXPORT)	LH	5977603
	3–C19	2.585	LAMP, PARK & T/SIG (INCLS 24)	94–97	F (T39) (EXPORT)	RH	5977604
24.		8.921	NUT, U TYPE, MULTI THD, PREV TORQ, M4.2X1.41TAP, 8.1REACH, 0.65–3.80 PNLS 1065 PZOR (PARK & TURN SIG LP) (PART OF 23) (AC–DELCO #11513599)	93–97		2	11513599
25.		8.900	BOLT/SCREW, HWH W/FL WA M4 2X1.41X20, 6010M, 7253M, 12.5 OD, DOG PT (PARK LP) (8.977)	93–97		2	11509709

cardiagn.com

26.	3–C24	2.726	BOLT, HDLP HSG PNL (M6X1X20) (8.900)	93–94	F	10	11514623
	3–C24	2.726	BOLT, HDLP HSG PNL (8.977) (USE T/W STD PT 11500321)	94	F	4	11503257
	3–C24	2.726	BOLT, HDLP HSG PNL (M6X1X18) (1.060)	95–97	F	10	52464988
27.	3–C24	2.726	PANEL, HDLP HSG (INCLS 35–51) (WITH HEADLAMPS)	93–97	F (EXC T72)	1	16524835
	3–C24	2.726	PANEL, HDLP HSG (INCLS 35–51)	93–97	F (T72)	1	16524836
28.	3–N14	8.024	BUMPER, HOOD ADJ FRT	93–97	F	2	10157703
29.	3–N14	8.024	CAP, HOOD ADJ FRT BPR (BLACK) (7.5MM)	93–97	F	4	14093705
30.	3–C25	2.727	CONNECTOR, LP–HDLP HIGH BEAM (BLACK) (2–WAY F) (W/LEADS) (2.535) (AC–DELCO #PT168)	93–97	F	2	12101898
31.	3–C25	2.727	CONNECTOR, LP–HDLP LOW BEAM (GRAY) (2–WAY F) (W/LEADS) (2.535) (AC–DELCO #PT167)	93–97	F	2	12101897
32.		8.900	BOLT, (HDLP HSG PNL UPR BRKT)	93–97	F	2	20351035
33.	3–C24	2.726	BRACKET, HDLP HSG PNL UPR	93–97	F	1	10247777
34.	3–C24	2.726	SUPPORT, HDLP (INNER) (W/WELD STUDS REQS "2" NUTS)	93–97	F	LH	10276146
35.		N.S.	LABEL, HDLP ADJ (PART OF 27)				
36.	3–C24	2.726	PANEL, HDLP HSG (PART OF 27) (WITH HEADLAMPS)	93–97	F (EXC T72)	1	16524835
	3–C24	2.726	PANEL, HDLP HSG (PART OF 27) (WITHOUT HEADLAMPS)	93–97	F (EXC T72)	1	16524838
	3–C24	2.726	PANEL, HDLP HSG (PART OF 27)	93–97	F (T72) (EXPORT)	1	16524836
37.	3–C26	2.737	BOLT, HDLP ADJ (PART OF 27)	93–97	F	AR	16516577
38.	3–C26	2.737	BOLT, HDLP HORIZ ADJR (PART OF 27) (2.726)	93–97	F	1	16504046
39.	3–C26	2.737	PIVOT, HDLP HORIZ (PART OF 27) (2.726)	93–97	F	2	16514352
40.	3–C26	2.737	PIVOT, HDLP HORIZ (PART OF 27) (2.726)	93–97	F	2	16516655
41.	3–C23	2.725	CAPSULE, HDLP (LOW BEAM) (W/BUBBLE LVL IND) (INCLS 42–45) (PART OF 27)	93–97	F (EXC T72)	LH	16510744
	3–C23	2.725	CAPSULE, HDLP (LOW BEAM) (W/BUBBLE LVL IND) (INCLS 42–45) (PART OF 27)	93–97	F (EXC T72)	RH	16513312
	3–C23	2.725	CAPSULE, HDLP (LOW BEAM) (INCLS 42–45) (PART OF 27)	93–97	F (T72) (EXPORT)	LH	16517064
	3–C23	2.725	CAPSULE, HDLP (LOW BEAM) (INCLS 42–45) (PART OF 27)	93–97	F (T72) (EXPORT)	RH	16517065
42.	3–C24	2.726	RING, HDLP MT (PART OF 27, 41)	93–97	F (LOW BEAM)	RH	16513311
	3–C24	2.726	RING, HDLP MT (PART OF 27, 41)	93–97	F (LOW BEAM)	LH	16513304
43.	3–C25	2.727	BULB, HDLP (LOW BEAM) (PART OF 27, 41) (AC–DELCO #H4351)	93–97	F (EXC T72)	2	16510872
	3–C25	2.727	BULB HDLP (LOW BEAM) (PART OF 27, 41) (AC–DELCO #H90)	93–97	F (T72) (EXPORT)	2	16517066

cardiagn.com

44.	3-C26	2.731	RING, HDLP RET (LOW BEAM) (PART OF 27, 41)	93-97	F (EXC T72)	RH	16513316
	3-C26	2.731	RING, HDLP RET (LOW BEAM) (PART OF 27, 41) (W/BUBBLE LVL IND)	93-97	F (EXC T72)	LH	16513315
	3-C26	2.731	RING, HDLP RET (LOW BEAM) (PART OF 27, 41) (2.737)	93-97	F (T72)	2	16514261
45.	3-C24	2.726	BOLT, HDLP (PART OF 27, 41, 47) (2.736)	93-97	F	2	16503553
46.	3-C24	2.726	SPRING, HDLP RET (PART OF 27)	93-97	F	4	16514449
47.	3-C23	2.725	CAPSULE, HDLP (HIGH BEAM) (INCLS 45, 48-50) (PART OF 27)	93-97	F (EXC T72)	RH	16510743
	3-C23	2.725	CAPSULE, HDLP (HIGH BEAM) (INCLS 45, 48-50) (PART OF 27)	93-97	F (EXC T72)	LH	16513310
	3-C23	2.725	CAPSULE, HDLP (HIGH BEAM) (INCLS 45, 48-50) (PART OF 27)	93-97	F (T72) (EXPORT)	LH	16520619
	3-C23	2.725	CAPSULE, HDLP (HIGH BEAM) (INCLS 45, 48-50) (PART OF 27)	93-97	F (T72) (EXPORT)	RH	16520620
48.	3-C26	2.731	RING, HDLP RET (HIGH BEAM) (PART OF 27, 47) (W/BUBBLE LVL IND)	93-97	F (EXC T72)	RH	16513315
	3-C26	2.731	RING, HDLP RET (HIGH BEAM) (PART OF 27, 47)	93-97	F (EXC T72)	LH	16513316
		N.S.	RING, HDLP RET (HIGH BEAM) (PART OF 27, 47)		(T72)		
49.	3-C25	2.727	BULB, HDLP (HIGH BEAM) (PART OF 27, 47) (AC-DELCO #H4352)	93-97	F (EXC T72)	2	16510873
		N.S.	BULB, HDLP (HIGH BEAM) (PART OF 27, 47)		(T72)		
50.	3-C24	2.726	RING, HDLP MT (PART OF 27, 47)	93-97	F (HIGH BEAM)	RH	16513304
	3-C24	2.726	RING, HDLP MT (PART OF 27, 47)	93-97	F (HIGH BEAM)	LH	16513311
51.	3-C26	2.728	FILLER, HDLP OPG (PART OF 27)	93-97	F	LH	16516317
	3-C26	2.728	FILLER, HDLP OPG (PART OF 27)	93-97	F	RH	16516318
52.		8.977	SCREW, M4.2X1.41X16 OV CSK TR HD C/R TAP, PEOR (FRT FOG LP OPG CVR) (16.650)	93-97		4	11503446
53.	3-C23	2.722	COVER, FRT FOG LP OPG (2.728)	93-97	F (EXC T96)	RH	10182056
	3-C23	2.722	COVER, FRT FOG LP OPG (2.728)	93-97	F (EXC T96)	LH	10182057

RPO DEFINITIONS
T39 – LAMP,TURN SIGNAL,AUXILIARY(EXPORT)
T72 – HEADLAMPS,LH RULE OF THE ROAD(EXPORT)
T96 – LAMP,FRONT FOG

cardiagn.com

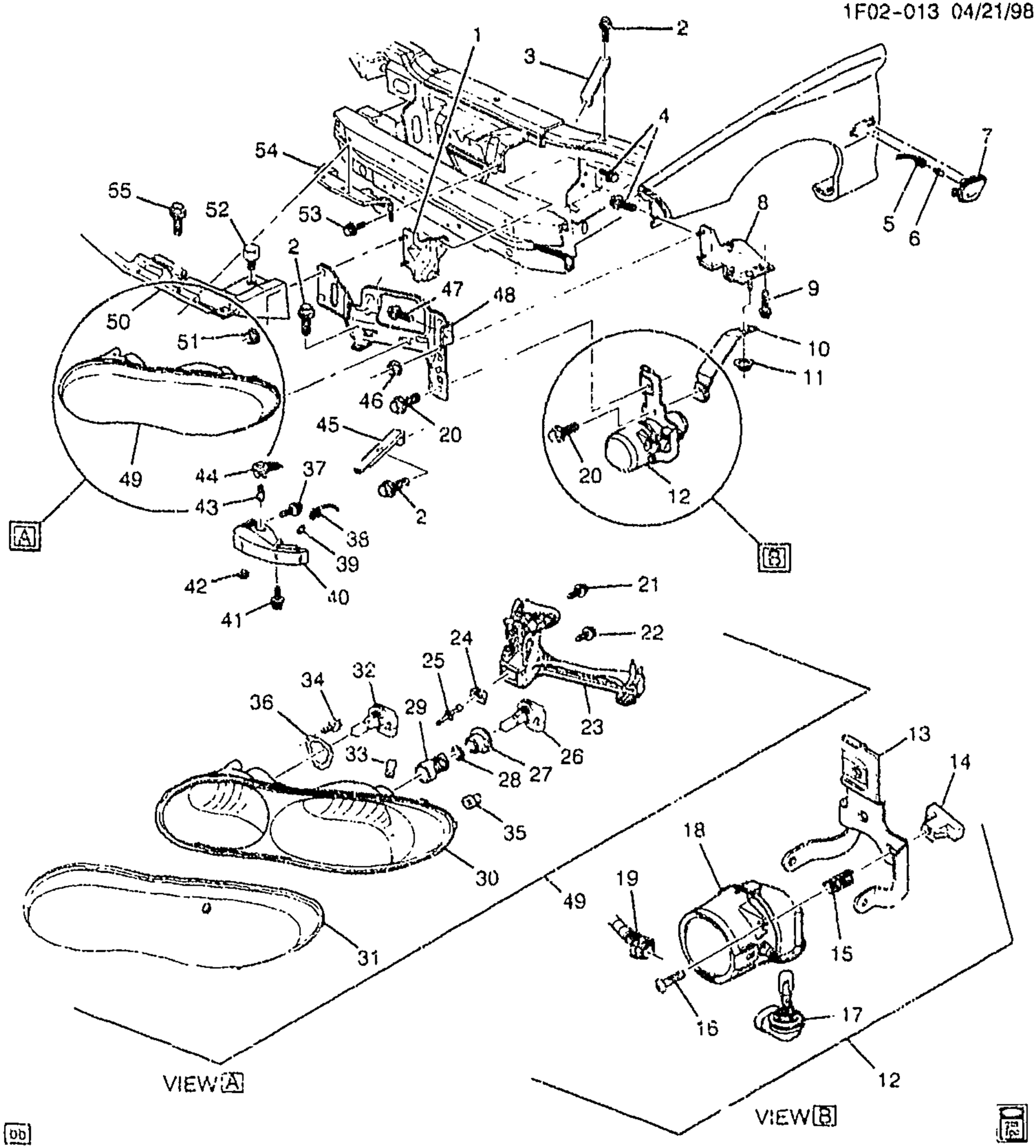

1F02-013

1998-2002 F LAMPS/FRONT

1.	3-C24	2.726	SUPPORT, HDLP (INNER) (W/WELD STUDS REQS "2" NUTS)	98-02	F	RH	10276145
	3-C24	2.726	SUPPORT, HDLP (INNER) (W/WELD STUDS REQS "2" NUTS)	98-02	F	LH	10276146

cardiagn.com

2.		8.900	BOLT, HEX W/CON WA, M6X1X20 (HDLP HSG PNL BRKT)	98–02	F	2	11514623
3.	3–C24	2.726	BRACKET, HDLP BRKT (UPPER)	98–02	F	RH	10290655
	3–C24	2.726	BRACKET, HDLP BRKT (UPPER)	98–02	F	LH	10290656
4.		8.900	BOLT, HEX W/CON WA, M6X1X20 (HDLP SUPT)	98–02	F	4	11514623
5.		N.S.	CONNECTOR, INLINE–TO ENG HARN ((AUX SI) (PART OF 7)				
6.		8.991	BULB (W5W) (T/SIG) (PART OF 7)	98–02	F (T39)	2	9442399
7.	3–C28	2.880	LAMP, AUX SI FRT T/SIG (INCLS 5, 6)	98–02	F (T39) (EXPORT)	2	16530239
8.	3–C24	2.726	SUPPORT, HDLP	98–02	F	RH	10414795
	3–C24	2.726	SUPPORT, HDLP	98–02	F	LH	10414796
9.		8.900	BOLT ASM, HEX W/CON WA, M6X1X25, 17 OD, FULL THD, AC PT, 9.8, CD CHROMATE BLK (F/FDR LWR BODY MT PLT)	98–02	F	4	11509363
10.	3–C24	2.726	BRACKET, FRT FOG LP	98–02	F (T37, T96) (EXPORT)	RH	10297391
	3–C24	2.726	BRACKET, FRT FOG LP	98–02	F (T37, T96) (EXPORT)	LH	10297392
11.		8.917	NUT, HEX W/CON WA 6X1X5.5 16–OD ZP 9 (F/FDR FRT REINF)	98–02	F	2	11517293
12.	3–C23	2.725	LAMP, FRT FOG (CPS) (INCLS 13–19)	98–02	F (T96)	RH	10280985
	3–C23	2.725	LAMP, FRT FOG (CPS) (INCLS 13–19)	98–02	F (T96)	LH	10280986
	3–C23	2.725	LAMP, FRT FOG (INCLS 13–19)	98–02	F (T37) (EXPORT)	RH	10283277
	3–C23	2.725	LAMP, FRT FOG (INCLS 13–19)	98–02	F (T37) (EXPORT)	LH	10283278
	3–C24	2.726	NUT, FRT FOG LP (M6.3 X 1.81) (2.485)	98–02	F (T96) (EXPORT)	1	10079170
13.		N.S.	BRACKET, FRT FOG LP (RH/LH) (PART OF 12)				
14.	3–C26	2.737	NUT, FRT FOG LP ADJ (PART OF 12)	98–02	F	2	10030367
15.		N.S.	SPRING, HDLP ADJ (SPRING, ADJ) (PART OF 12))				
16.	3–C26	2.737	BOLT, FRT FOG LP ADJR (PART OF 12) (1/2 X 5/64 X 29/64)	98–02	F (T96)	2	10031825
17.	3–C25	2.727	BULB, FRT FOG LP (PART OF 12 (12450260)) (AC–DELCO #894)	98–02	F (T96)	2	12450260
18.		N.S.	LENS, FRT FOG LP (PART OF 12)	98–02	F	2	
19.	3–C25	2.727	CONNECTOR, LP–FOG (PART OF 12) (BLACK 12085498) (2–WAY F W/LEADS) (USED ON FOG LAMPS W/ STRAIGHT TERMINALS 90DEG TERMS SEE) (2.535) (AC–DELCO #PT331)	98–02	F	2	12102664
	3–C25	2.727	CONNECTOR, LP–FOG (PART OF 12) (TERMINALS SEE 12102664) (2–WAY F) (W/LEADS) (USE ON FOG LAMPS W/ 90 DEGREE BENT TERMINALS FOR STRAIGHT) (2.530) (AC–DELCO #PT120)	98–02	F	1	12085498
	3–C25	2.727	CONNECTOR, LP–FOG (PART OF 12) (BLACK) (2–WAY M) (W/O LEADS) (2.530)	98–02	F	2	12162000

cardiagn.com

	3–C25	2.727	CONNECTOR, LP–FOG (PART OF 12) (6–WAY F, W/LEADS, 150) (11.500) (AC–DELCO #PT1186)	98	F (D07)	1	15305927
	3–C25	2.727	CONNECTOR, LP–FOG (PART OF 12) (6–WAY F, W/LEADS, 150) (11.500) (AC–DELCO #PT1186)	99–02	F (T79) (EXPORT)	1	15305927
20.		8.977	SCREW, HEX W/TT CON WA TYPE C M6X1X20 HRD PT PZOR (FRT FOG LP BRKT)	98–02		AR	11508023
21.		N.S.	BOLT, HDLP (PART OF 49)				
22.	3–C26	2.737	BOLT, HDLP HORIZ ADJR (PART OF 49) (2.726)	98–02	F	8	16504046
23.		N.S.	BRACKET, HDLP ADJ (PART OF 49)				
24.		N.S.	SOCKET, HDLP BALL STUD (PART OF 49)				
25.		N.S.	STUD, HDLP VERT ADJR BALL (BALL STUD (PART OF 49))				
26.	3–C23	2.725	HEADLAMP, (PART OF 49)	98–02	F (EXC T72, T84, T85)	LH	16525313
	3–C23	2.725	HEADLAMP, (PART OF 49)	98–02	F (EXC T72, T84, T85)	RH	16525314
	3–C23	2.725	HEADLAMP, (PART OF 49)	98–02	F (T72) (EXPORT)	LH	16525319
	3–C23	2.725	HEADLAMP, (PART OF 49)	98–02	F (T72) (EXPORT)	RH	16525320
27.		N.S.	BOLT, HDLP BULB RET (RETAINER, BULB (PART OF 49))				
28.		N.S.	RING, HDLP RET (O–RING, BULB RETAINER (PART OF 49))				
29.		N.S.	SHIELD, BULB (PART OF 49)				
30.		N.S.	HOUSING, HDLP (HOUSING (PART OF 49))				
31.		N.S.	LENS (PART OF 49)				
32.	3–C25	2.727	BULB, HDLP (HIGH BEAM) (PART OF 49) (AC–DELCO #9005) (TRADE #399AS)	98–02	F	2	9441732
33.		N.S.	CLIP, HDLP BRKT (CLIP, LENS (PART OF 49))				
34.		N.S.	BOLT, HDLP (SCREW, BULB RETAINER (PART OF 49))				
35.		N.S.	VENT, HDLP (PART OF 49)				
36.		N.S.	RETAINER, HDLP BULB (PART OF 49)			LH	
		N.S.	RETAINER, HDLP BULB (PART OF 49)			RH	
37.		8.977	BOLT, SCR HEX W/FLAT WA 12 DIA TYPE AB (PARK LP)	99–02		4	11509374
38.	3–C19	2.575	SOCKET, FRT SI MKR LP (W/LEADS) (2.596) (AC–DELCO #LS44)	98–02	F	2	12141388
39.		8.991	TRADE#194, 12V, 2CP (FRT SI MKR LP) (AC–DELCO #L194)	98–02	F (EXC T39)	2	9421330
40.	3–C19	2.585	LAMP, PARK & T/SIG (INCLS 42)	98–02	F (EXC T39)	LH	5978551
	3–C19	2.585	LAMP, PARK & T/SIG (INCLS 42)	98–02	F (EXC T39)	RH	5978552
	3–C19	2.585	LAMP, PARK & T/SIG (INCLS 42)	98–02	F (T39) (EXPORT)	LH	5978561
	3–C19	2.585	LAMP, PARK & T/SIG (INCLS 42)	98–02	F (T39) (EXPORT)	RH	5978562

cardiagn.com

41.		8.900	BOLT/SCREW, HWH W/FL WA M4.2X1.41X20, 6010M, 7253M, 12.5 OD, DOG PT (PARK LP) (8.977)	98-02		2	11509709
42.		8.921	NUT, U TYPE, MULTI THD, PREV TORQ, M4.2X1.41TAP, 8.1REACH, 0.65-3.80 PNLS 1065 PZOR (PARK & TURN SIG LP) (PART OF 40) (AC-DELCO #11513599)	98-02		2	11513599
43.		8.991	BULB, TRADE #3157 (PARK & T/SIG LP) (2.679) (AC-DELCO #3157KX)	98-02		2	12450108
44.	3-C20	2.596	SOCKET, PARK & T/SIG LP (2.594) (AC-DELCO #LS54)	98-02	F	2	12159662
45.	3-C24	2.726	BRACKET, HDLP (LOWER, W/NUT)	98-02	F	RH	10290657
	3-C24	2.726	BRACKET, HDLP (LOWER, W/NUT)	98-02	F	LH	10290658
46.		8.917	NUT, HEX W/CON WA 6X1X5.5 16-OD ZP 9 (HDLP SUPT)	98-02	F	4	11517293
47.		8.900	BOLT, HEX W/CON WA, M6X1X20 (AT FENDER)	98-02	F	2	11514623
48.	3-C24	2.726	BRACKET, HDLP	98-02	F	RH	10418137
	3-C24	2.726	BRACKET, HDLP	98-02	F	LH	10418138
49.	3-C23	2.725	HEADLAMP (INCLS 21-36)	98-02	F (EXC T72, T84, T85)	LH	16525313
	3-C23	2.725	HEADLAMP (INCLS 21-36)	98-02	F (EXC T72, T84, T85)	RH	16525314
	3-C23	2.725	HEADLAMP (INCLS 21-36)	98-02	F (T72) (EXPORT)	LH	16525319
	3-C23	2.725	HEADLAMP (INCLS 21-36)	98-02	F (T72) (EXPORT)	RH	16525320
	3-C23	2.725	HEADLAMP (W/LVLG ACTR) (INCLS 21-36)	98-02	F (T84) (EXPORT)	LH	16525315
	3-C23	2.725	HEADLAMP (W/LVLG ACTR) (INCLS 21-36)	98-02	F (T84) (EXPORT)	RH	16525316
	3-C23	2.725	HEADLAMP (W/LVLG ACTR) (INCLS 21-36)	98-02	F (T85) (EXPORT)	LH	16525317
	3-C23	2.725	HEADLAMP (W/LVLG ACTR) (INCLS 21-36)	98-02	F (T85) (EXPORT)	RH	16525318
50.	3-N13	7.833	SUPPORT, FRT BPR FASCIA CTR	98-02	F	1	10276561
51.		8.917	NUT, HEX W/CON WA 6X1X5.5 16-OD ZP 9	98-02	F	4	11517293
52.	3-N14	8.024	BUMPER, HOOD ADJ FRT (24.42X28.20X40.00)	98-02	F	2	10413888
53.		8.900	BOLT, HEX W/CON WA, M6X1X20 (HDLP HSG PNL UPR BRKT)	98-02	F	2	11514623
54.	3-C24	2.726	BRACKET, HDLP HSG PNL UPR	98-02	F	1	10247777
55.	3-N13	7.833	BOLT, FRT BPR FASCIA CTR SUPT (M6X1X18) (1.060)	98-02	F	2	52464988

RPO DEFINITIONS
D07 - CONSOLE,FRONT COMPARTMENT FLOOR(CUSTOM)
T37 - LAMP,FOG(DELUXE)
T39 - LAMP,TURN SIGNAL,AUXILIARY(EXPORT)
T72 - HEADLAMPS,LH RULE OF THE ROAD(EXPORT)
T79 - LAMPS,REAR FOG(EXPORT)
T84 - HEADLAMPS,RH RULE OF THE ROAD,RECTANGULAR(MARKED E)(EXPORT)
T85 - HEADLAMPS,LH RULE OF THE ROAD,RECTANGULAR(MARKED E)(EXPORT)
T96 - LAMP,FRONT FOG

cardiagn.com

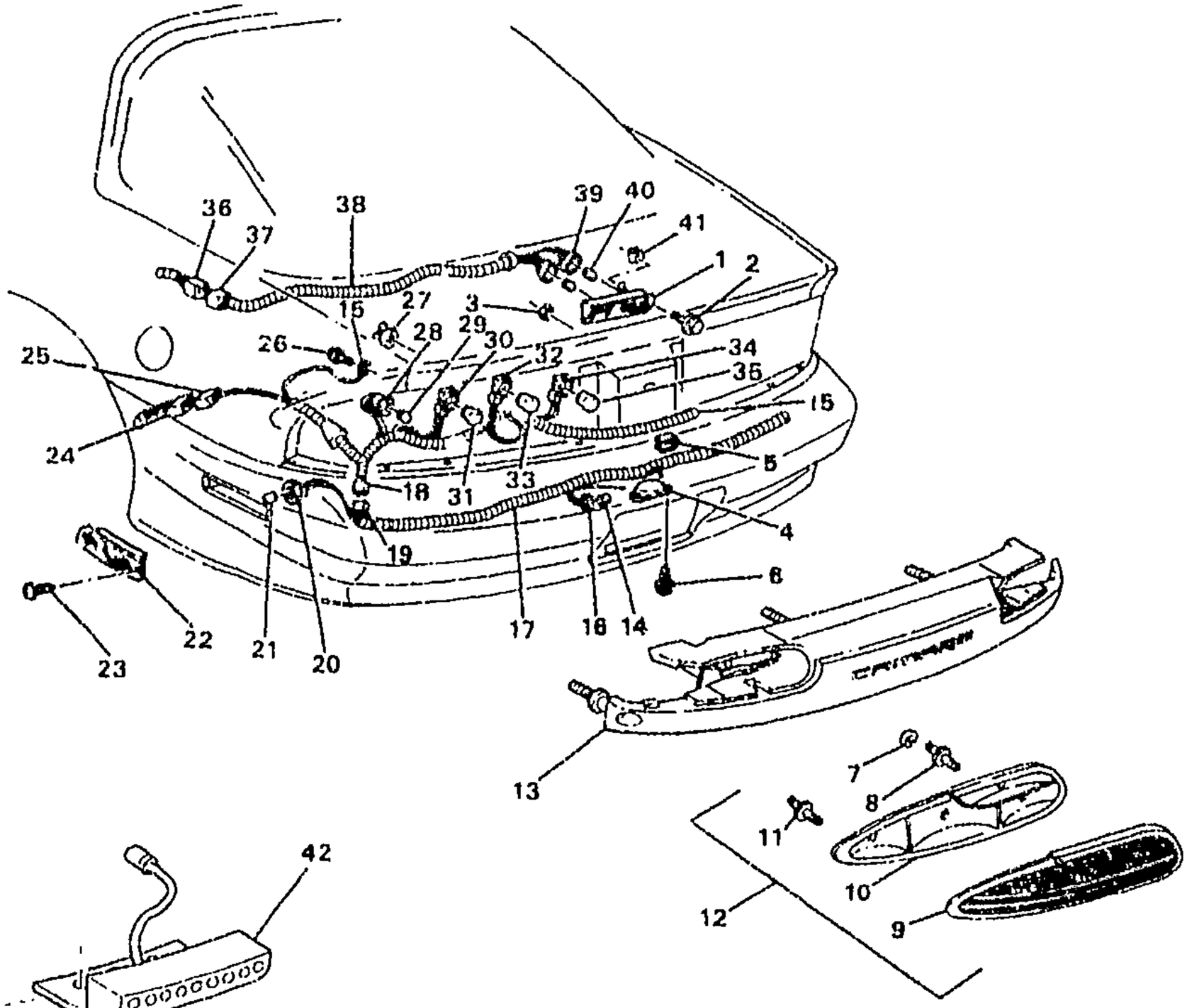

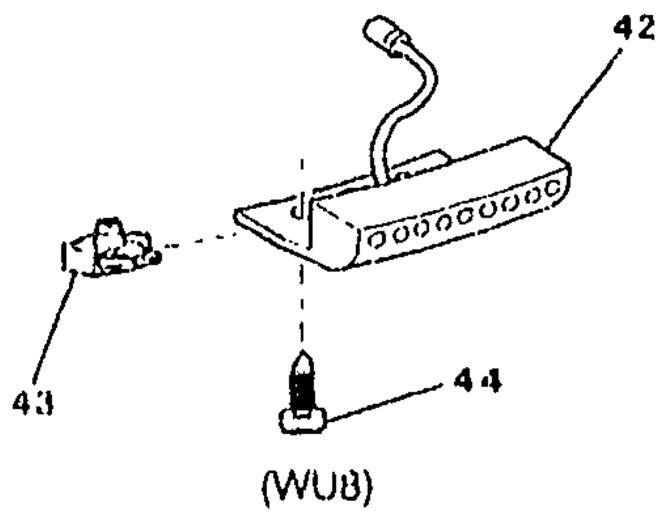

(WU8)

bb

1F02-010

1993-1997 F LAMPS/REAR
1998-2002 F LAMPS/REAR (DOMESTIC)

1.	3-C20	2.679	LAMP, HIGH MT STOP (INCLS 37-40)	93-02	F	1	5978421
2.		8.977	SCREW, PAN HD, M4.2X1.4X35, TORX, TAP, 6138M, NORG (HIGH MT S/LP)	93-02	.....	2	11515985
3.		8.917	NUT ASM, HEX W/TT CON WA & SEALING WA, M6X1X5.5, 24 OD, (9), PS (R/END FIN PNL)	93-02	.....	4	11509567
4.	3-C22	2.700	LAMP, RR LIC PLT (INCLS 5)	93-97	F	1	5977411
	3-C22	2.700	LAMP, RR LIC PLT (INCLS 5)	98-02	F (EXC VL5)	1	5977411
5.		8.921	NUT, M4.2X1.4, 19.3X213.6.8.9 (PART OF 4) (AC-DELCO	93-02	.....	2	15650655

cardiagn.com

6.	3-C22	2.708	BOLT, RR LIC PLT LP	93-02	F	2	3974037
7.	3-C20	2.660	SEAL, T/LP (PART OF 12) (ROUND, 27MM DIA) (7.800)	93-02	F	AR	5967657
8.	3-C20	2.664	STUD, T/LP HSG (PART OF 12)	93-01	F (EXC T90)	AR	5967663
9.		N.S.	LENS, T/LP (PART OF 12)				
10.		N.S.	HOUSING, T/LP (PART OF 12)				
11.		N.S.	STUD, T/LP HSG (PART OF 12)				
12.	3-C20	2.679	LAMP, TAIL (INCLS 7-11)	93-96	F (EXC T90)	LH	5976011
	3-C20	2.679	LAMP, TAIL (INCLS 7-11)	93-96	F (EXC T90)	RH	5976012
	3-C20	2.679	LAMP, TAIL (INCLS 7-11)	97	F	LH	5977791
	3-C20	2.679	LAMP, TAIL (INCLS 7-11)	97	F	RH	5977792
	3-C20	2.679	LAMP, TAIL (INCLS 7-11)	98-02	F (EXC T89)	LH	5977791
	3-C20	2.679	LAMP, TAIL (INCLS 7-11)	98-02	F (EXC T89)	RH	5977792
	3-C20	2.679	LAMP, TAIL (INCLS 7-11)	93-96	F (T90) (EXPORT)	LH	5978079
		DISCON	LAMP, TAIL (INCLS 7-11)	93-96	F (T90) (EXPORT)	RH	5978080
13.	3-N21	12.966	PANEL, R/END FIN	93-02	F	1	10262039
14.		8.991	TRADE#194, 12V, 2CP (RR LIC PLT LP) (AC-DELCO #L194)	93-02		1	9421330
15.	3-N21	13.090	HARNESS, BODY RR WRG (INCLS 18, 25, 28, 30, 32, 34)	93-96	F (EXC T90)	1	12090103
	3-N21	13.090	HARNESS, BODY RR WRG (INCLS 18, 25, 28, 30, 32, 34) (12177555 T/W 4 OF 9441839 REPLS 12145738)	97	F	1	12177555
	3-N21	13.090	HARNESS, BODY RR WRG (INCLS 18, 25, 28, 30, 32, 34)	98-02	F (EXC T79)	1	12177556
16.	3-C23	2.714	SOCKET, RR LIC PLT LP (PART OF 17) (2.575) (AC-DELCO #LS101)	93-02	F	1	6298886
	3-C23	2.714	SOCKET, RR LIC PLT LP (PART OF 17) (W/LEADS) (2.596) (AC-DELCO #LS44)	97	F (T72, T90) (EXPORT)	2	12141388
17.	3-C23	2.714	HARNESS, RR LIC PLT & RR SI MKR LP WRG (INCLS 16, 19, 20)	93-96	F (EXC T90, UD6)	1	12145884
	3-C23	2.714	HARNESS, RR LIC PLT & RR SI MKR LP WRG (INCLS 16, 19, 20)	97	F (EXC T90, T72)	1	12145884
	3-C23	2.714	HARNESS, RR LIC PLT & RR SI MKR LP WRG (INCLS 16, 19, 20)	98-02	F (EXC T72, T79)	1	12145884
	3-C23	2.714	HARNESS, RR LIC PLT & RR SI MKR LP WRG (INCLS 16, 19)	98-02	F (EXC T72, T79)	1	12145884
	3-C23	2.714	HARNESS, RR LIC PLT & RR SI MKR LP WRG (INCLS 16, 19)	93-96	F (T90) (EXPORT)	1	12145885
	3-C23	2.714	HARNESS, RR LIC PLT & RR SI MKR LP WRG (INCLS 16, 19)	97	F (T72) (EXPORT)	1	12145887
18.		N.S.	CONNECTOR, LP-RR LIC PLT (PART OF 15)				
19.	3-N25	13.100	CONNECTOR, INLINE-TO BODY HARN (PART OF 17) (GREY) (2-WAY F, M/P 150 SLD W/LEADS) (4.710) (AC-DELCO #PT1357)	93	F (EXC T90, UD6)	1	15306302
	3-N25	13.100	CONNECTOR, INLINE-TO BODY HARN (PART OF 17) (6-WAY F W/LEADS) (13.090) (AC-DELCO #PT1032)	94-95	F	1	15305888

cardiagn.com

	3-N25	13.100	**CONNECTOR**, INLINE-TO BODY HARN (PART OF 17) (BLACK) (2-WAY M W/LEADS) (2.535) (AC-DELCO #PT103) ...	96-02	F	2	12085481
	3-N25	13.100	**CONNECTOR**, INLINE-TO BODY HARN (PART OF 17) (NATURAL) (2-WAY F) (W/LEADS) (2.535) (AC-DELCO #PT213)	98-02	F	1	12101821
	3-N25	13.100	**CONNECTOR**, INLINE-TO BODY HARN (PART OF 17) (BLACK) (6-WAY M W/LEADS) (AC-DELCO #PT1013)	98	F	1	15305872
	3-N25	13.100	**CONNECTOR**, INLINE-TO BODY HARN (PART OF 17) (BLACK) (6-WAY M W/LEADS) (AC-DELCO #PT1013)	02	F	1	15305872
	3-N25	13.100	**CONNECTOR**, INLINE-TO BODY HARN (ELC & RR LIC LP) (PART OF 17) (GREY) (2-WAY F, M/P 150 SLD W/LEADS) (4.710) (AC-DELCO #PT1357)	93-95	F	1	15306302
20.	3-C18	2.575	**SOCKET**, RR SI MKR LP (PART OF 17) (W/CBL) (2.714) (AC-DELCO #LS5)	93-02	F	AR	12001470
	3-C18	2.575	**SOCKET**, RR SI MKR LP (PART OF 17) (AC-DELCO #LS101) ...	95-96	F (T90) (EXPORT)	2	6298886
21.		8.991	**TRADE#194**, 12V, 2CP (RR SI MKR LP) (AC-DELCO #L194) ...	93-02	.....	2	9421330
22.	3-C18	2.575	**LAMP**, RR SI MKR	98-02	F	LH	5976009
	3-C18	2.575	**LAMP**, RR SI MKR	96-02	F	RH	5976010
	3-C18	2.575	**LAMP**, RR SI MKR	98-02	F	LH	5976517
	3-C18	2.575	**LAMP**, RR SI MKR	98-02	F	RH	5976518
23.		8.977	**SCREW**, M4.2X1.41X20 BL OX (RR SI MKR LP)	93-02	.....	2	11504655
24.		N.S.	**CONNECTOR**, INLINE-TO BODY HARN		.....		
25.	3-C8	2.530	**CONNECTOR**, INLINE-TO I/P HARN (PART OF 15) (GRAY) (6-WAY F W/LEADS) (4.663)	93-02	F	1	12125665
26.		8.977	**SCREW**, MET HEX HD (M6.3X1.81) (BODY RR WRG HARN GND)	93-02	.....	1	11502707
27.	3-C20	2.664	**NUT**, T/LP (M6X1.00) (HEX FLANGED UNTHREADED PLASTIC WINGNUT) (12.966)	93-02	F	4	20739862
28.	3-C21	2.694	**SOCKET**, T/LP (PART OF 15) (2.575) (AC-DELCO #LS101) ...	93-96	F (EXC T90)	2	6298886
	3-C21	2.694	**SOCKET**, T/LP (PART OF 15) (W/LEADS) (2.596) (AC-DELCO #LS44)	97-02	F	RH	12141398
29.		8.991	**TRADE#194**, 12V, 2CP (T/LP) (AC-DELCO #L194)	93-02	(EXC T90)	2	9421330
30.	3-C21	2.694	**SOCKET**, STOP & T/LP (PART OF 15) (AC-DELCO #LS7)	93-96	F (EXC T90)	2	12003759
	3-C28	2.880	**SOCKET**, RR T/SIG LP (PART OF 15) (2.594) (AC-DELCO #LS54) .	99-02	F (EXC T79)	2	12159662

cardiagn.com

	3–C28	2.892	SOCKET, RR T/SIG LP (PART OF 15) (2.535) (AC–DELCO #LS39) .	97	F (T90) (EXPORT)	2	12141301
31.		8.991	BULB, 12/14V 32–2 C .P. (STOP & TAIL & T/SIG LP) (AC–DELCO #L2057)	93–02	(EXC T90)	2	9438848
		8.991	BULB, 12V, 32 CP/TRADE #1156 (T/SIG) (AC–DELCO #L1156) ...	93–97	(T90)	2	9417966
32.	3–C21	2.694	SOCKET, STOP & T/LP (PART OF 15) (AC–DELCO #LS7)	93–96	F (EXC T90)	2	12003759
	3–C21	2.694	SOCKET, STOP & T/LP (PART OF 15) (AC–DELCO #LS40)	93–96	F (T90)	2	12141302
	3–C21	2.694	SOCKET, STOP & T/LP (PART OF 15) (AC–DELCO #LS49)	97–02	F (EXC T90)	2	12141493
33.		8.991	BULB, 12/14V 32–2 C .P. (STOP & TAIL & T/SIG LP) (AC–DELCO #L2057)	93–02	.....	2	9438848
34.	3–C22	2.697	SOCKET, B/U LP (PART OF 15) (2.694) (AC–DELCO #LS53)	93–97	F (EXC T90)	2	12003758
	3–C22	2.697	SOCKET, B/U LP (PART OF 15) (2.535) (AC–DELCO #LS39)	93–97	F (T90)	2	12141301
35.		8.991	B/U LP (AC–DELCO #L1141) ...	93–97	....	2	142456
		8.991	BULB, TRADE # 2355 (B/U LP) (AC–DELCO #L3155)	98–02	(EXC T72, T79)	2	9442081
		8.991	BULB, (TRADE # P21W) (B/U LP)	98–02	(T72, T79)	2	9442442
36.	3–C21	2.694	CONNECTOR, LP–HIGH MT STOP (2–WAY F W/LEADS, W/INDEX TAB OTR EDGE OF CAVITY B) (2.535) (AC–DELCO #PT146)	93–02	F	AR	12085535
	3–C21	2.694	CONNECTOR, LP–HIGH MT STOP (BLACK) (2–WAY M W/LEADS) (2.535) (AC–DELCO #PT103)	93–02	F	1	12085481
37.	3–C21	2.694	CONNECTOR, LP–HIGH MT STOP (PART OF 1, 38) (2–WAY F W/LEADS, W/INDEX TAB OTR EDGE OF CAVITY B) (2.535) (AC–DELCO #PT146)	93–02	F	1	12085535
38.		N.S.	HARNESS, HIGH MT S/LP WRG (INCLS 37, 39) (PART OF 1)		.....		
39.	3–C21	2.694	SOCKET, HIGH MT S/LP (PART OF 1, 38) (W/LEADS) (2.596) (AC–DELCO #LS44)	93–02	F	2	12141388
40.		8.991	BULB, WEDGE BASE, 12.8VOLTS, 1.4AMPS, 21CPTRADE NO. 921 (PART OF 1) (AC–DELCO #W16W921)	93–02	.....	2	12450313
41.		8.921	NUT, U TYPE, MULTI THD, PREV TORQ, M4.2X1.41TAP, 8.1REACH, 0.65–3.80 PNLS 1065 PZOR (HIGH MT S/LP) (AC–DELCO #11513599)	93–02	.....	2	11513599
42.	3–C20	2.679	LAMP, HIGH MT STOP (INCLS 43, 44) (LED STYLE LAMP, INCLUDES CONNECTOR)	98–02	F (WU8)	1	12369969

cardiagn.com

43.	8.921	NUT, U TYPE, MULTI THD, PREV TORQ, M4.2X1.41TAP, 8.1REACH, 0.65-3.80 PNLS 1065 PZOR (PART OF 42) (AC-DELCO #11513599)	93-02	3	11513599
44.	8.977	SCREW, PAN HD TORX TAP M4.2X1.41X25 SS BL OX (PART OF 42)	93-02	3	11504662

RPO DEFINITIONS

T72 -- HEADLAMPS,LH RULE OF THE ROAD(EXPORT)
T79 -- LAMPS,REAR FOG(EXPORT)
T89 -- LAMP,TAIL AND STOP(EXPORT)
T90 -- LAMP,SIGNALING AND MARKER(EXPORT)
UD6 -- ALARM,EXHAUST TEMPERATURE(EXPORT)
VL5 -- LICENSE PLATE,REAR MOUNTING PACKAGE(EXPORT)
WU8 -- SALES PACKAGE Z28 SS UPFITTER

cardiagn.com

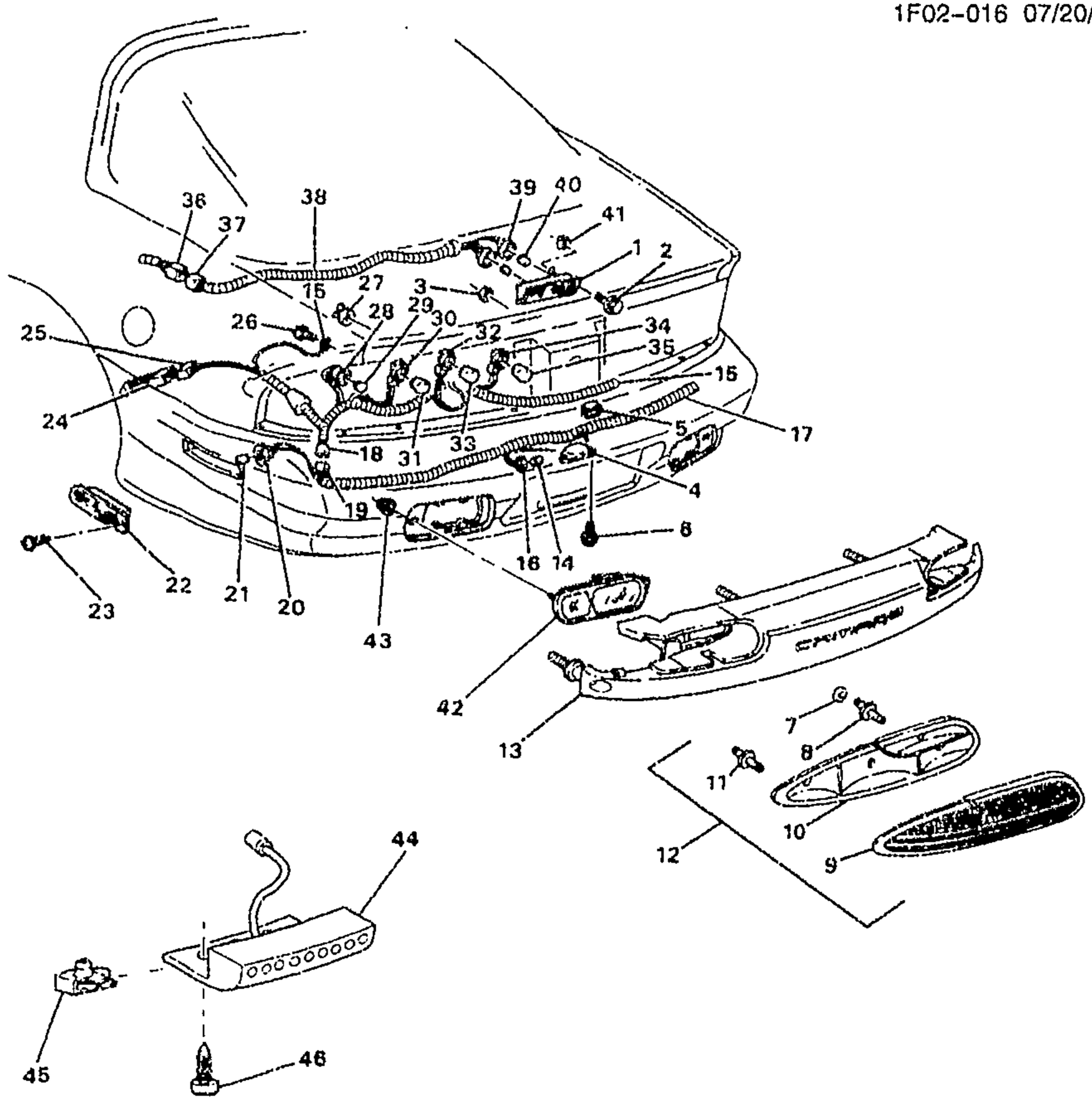

(WU8)

bb

1F02-016

1998-2002 F LAMPS/REAR (EXPORT)

1.	3-C20	2.679	LAMP, HIGH MT STOP (INCLS 37-40)	98-02	F 1	5978421
2.		8.977	SCREW, PAN HD, M4.2X1.4X35, TORX, TAP, 6138M, NORG (HIGH MT S/LP)	98-02	 2	11515985
3.		8.917	NUT ASM, HEX W/TT CON WA & SEALING WA, M6X1X5.5, 24 OD, (9), PS (R/END FIN PNL)	98-02	 4	11509567
4.	3-C22	2.700	LAMP, RR LIC PLT (INCLS 5)	98-02	F (VL5) (EXPORT) 2	5978455
5.		8.921	NUT, M4.2X1.4, 19.3X213.6.8.9 (RR LIC LP SPRG) (PART OF 4) (AC-DELCO #15650655)	98-02	 2	15650655

cardiagn.com

6.	3-C22	2.708	BOLT, RR LIC PLT LP	98-02	F	2	3974037
7.	3-C20	2.660	SEAL, T/LP (PART OF 12) (ROUND, 27MM DIA) (7.800)	98-02	F	AR	5967657
8.		N.S.	STUD, T/LP HSG (PART OF 12)				
9.		N.S.	LENS, T/LP (PART OF 12)				
10.		N.S.	HOUSING, T/LP (PART OF 12)				
11.		N.S.	STUD, T/LP HSG (PART OF 12)				
12.	3-C20	2.679	LAMP, TAIL (INCLS 7-11)	98-02	F (T89) (EXPORT)	LH	5978273
	3-C20	2.679	LAMP, TAIL (INCLS 7-11)	98-02	F (T89) (EXPORT)	RH	5978274
13.	3-N21	12.966	PANEL, R/END FIN	98-02	F	1	10262039
14.		8.991	TRADE#194, 12V, 2CP (RR LIC LP) (AC-DELCO #L194)	98-02		1	9421330
15.	3-N21	13.090	HARNESS, BODY RR WRG (INCLS 18, 25, 28, 30, 32, 34)	98-02	F (T79) (EXPORT)	1	12177400
16.	3-C23	2.714	SOCKET, RR LIC PLT LP (PART OF 17) (2.575) (AC-DELCO #LS101)	98-02	F	1	6298886
	3-C23	2.714	SOCKET, RR LIC PLT LP (PART OF 17) (W/LEADS) (2.596) (AC-DELCO #LS44)	98-02	F (T72, T79) (EXPORT)	1	12141388
17.	3-C23	2.714	HARNESS, RR LIC PLT & RR SI MKR LP WRG (INCLS 16, 19, 20)	98-02	F (T72) (EXPORT)	1	12145887
	3-C23	2.714	HARNESS, RR LIC PLT & RR SI MKR LP WRG (INCLS 16, 19, 20)	98-02	F (T79) (EXPORT)	1	12145886
18.		N.S.	CONNECTOR, LP-RR LIC PLT (PART OF 15)				
19.	3-C8	2.530	CONNECTOR, INLINE-TO I/P HARN (PART OF 17) (GRAY) (6-WAY F W/LEADS) (4.663)	98-02	F	1	12125665
	3-C8	2.530	CONNECTOR, INLINE-TO I/P HARN (PART OF 17) (6-WAY F W/LEADS) (13.090) (AC-DELCO #PT1032)	98	F	1	15305888
	3-C8	2.530	CONNECTOR, INLINE-TO I/P HARN (PART OF 17) (2-WAY M W/LEADS) (12.243) (AC-DELCO #PT1227)	98-02	F (M49)	1	15306065
	3-C8	2.530	CONNECTOR, INLINE-TO I/P HARN (PART OF 17) (10-WAY F W/LEADS) (2.535) (AC-DELCO #PT150)	98-02	F	1	12101762
	3-C8	2.530	CONNECTOR, INLINE-TO I/P HARN (PART OF 17) (BLUE) (10-WAY F) (W/LEADS) (AC PT224) (2.535) (AC-DELCO #PT224)	98-02	F	1	12101832
	3-C8	2.530	CONNECTOR, INLINE-TO I/P HARN (PART OF 17) (GRAY) (8-WAY F) (W/LEADS) (2.535) (AC-DELCO #PT214)	98-02	F	1	12101827
	3-C8	2.530	CONNECTOR, INLINE-TO I/P HARN (PART OF 17) (2-WAY F W/LEADS, W/INDEX TAB OTR EDGE OF CAVITY B) (2.535) (AC-DELCO #PT146)	98	F	1	12085535

cardiagn.com

	3-C8	2.530	**CONNECTOR**, INLINE-TO I/P HARN (PART OF 17) (NATURAL) (2-WAY F) (W/LEADS) (2.535) (AC-DELCO #PT213)	98-02	F (AQ9)	1	12101821
	3-C8	2.530	**CONNECTOR**, INLINE-TO I/P HARN (PART OF 17) (W/LEADS) (4.022) (AC-DELCO #LS28)	98	F	1	12125966
	3-C8	2.530	**CONNECTOR**, INLINE-TO I/P HARN (PART OF 17) (4-WAY F, W/O LEADS) (9.709)	98-02	F (L36, LS1)	1	12129136
	3-C8	2.530	**CONNECTOR**, INLINE-TO I/P HARN (PART OF 17) (W/O LEADS)	98-02	F (LS1)	1	12162504
	3-C8	2.530	**CONNECTOR**, INLINE-TO I/P HARN (PART OF 17) (W/O LEADS)	98-02	F (L36)	1	12162504
	3-C8	2.530	**CONNECTOR**, INLINE-TO I/P HARN (PART OF 17) (4-WAY F) (M/P 150) (W/LEADS) (13.100) (AC-DELCO #PT1025)	98-02	F	1	15305883
	3-C8	2.530	**CONNECTOR**, INLINE-TO I/P HARN (PART OF 17) (BLACK) (2-WAY F W/LEADS) (2.535) (AC-DELCO #PT159)	98-02	F87	1	12101888
	3-C8	2.530	**CONNECTOR**, INLINE-TO I/P HARN (PART OF 17) (2-WAY M W/LEADS) (12.243) (AC-DELCO #PT1227)	99-02	F (MM6)	1	15306065
	3-C8	2.530	**CONNECTOR**, INLINE-TO I/P HARN (PART OF 17) (2-WAY F W/LEADS, W/INDEX TAB OTR EDGE OF CAVITY B) (2.535) (AC-DELCO #PT146)	02	F (T79)	1	12085535
	3-C8	2.530	**CONNECTOR**, INLINE-TO I/P HARN (FLAT) (PART OF 17) (4-WAY F) (W/LEADS) (2.535) (AC-DELCO #PT109)	98	F	AR	12085487
	3-C8	2.530	**CONNECTOR**, INLINE-TO I/P HARN (PART OF 17) (2-WAY F W/LEADS, W/INDEX TAB OTR EDGE OF CAVITY B) (2.535) (AC-DELCO #PT146)	99-02	F (T79) (EXPORT)	1	12085535
20.	3-C18	2.575	**SOCKET**, RR SI MKR LP (PART OF 17) (W/CBL) (2.714) (AC-DELCO #LS5)	98-02	F	AR	12001470
21.		8.991	**TRADE#194**, 12V, 2CP (RR SI MKR LP) (AC-DELCO #L194) ...	98-02	.....	2	9421330
22.	3-C18	2.575	**LAMP**, RR SI MKR	98-02	F (VJ1) (EXPORT)	LH	5976517
	3-C18	2.575	**LAMP**, RR SI MKR	98-02	F (VJ1) (EXPORT)	RH	5976518
23.		8.977	**SCREW**, M4.2X1.41X20 BL OX (RR SI MKR LP)	98-02	.....	2	11504655
24.	3-N25	13.100	**CONNECTOR**, INLINE-TO BODY HARN (BLACK) (2-WAY M W/LEADS) (2.535) (AC-DELCO #PT103)	98-02	F	2	12085481

cardiagn.com

	3-N25	13.100	CONNECTOR, INLINE-TO BODY HARN (NATURAL) (2-WAY F) (W/LEADS) (2.535) (AC-DELCO #PT213)	98-02	F	1	12101821
	3-N25	13.100	CONNECTOR, INLINE-TO BODY HARN (BLACK) (6-WAY M W/LEADS) (AC-DELCO #PT1013)	98	F	1	15305872
	3-N25	13.100	CONNECTOR, INLINE-TO BODY HARN (BLACK) (6-WAY M W/LEADS) (AC-DELCO #PT1013)	02	F	1	15305872
25.	3-C8	2.530	CONNECTOR, INLINE-TO I/P HARN (W/LEADS) (PART OF 15) (GRAY) (6-WAY F W/LEADS) (4.663)	98-02	F	1	12125665
26.		8.977	SCREW, MET HEX HD (M6.3X1.81) (BODY RR WRG HARN GND)	98-02	.....	1	11502707
27.	3-C20	2.664	NUT, T/LP (M6X1.00) (HEX FLANGED UNTHREADED PLASTIC WINGNUT) (12.966)	98-02	F	4	20739862
28.	3-C21	2.694	SOCKET, T/LP (PART OF 15) (W/LEADS) (2.596) (AC-DELCO #LS44)	98-02	F	RH	12141388
29.		8.991	TRADE#194, 12V, 2CP (T/LP) (AC-DELCO #L194)	98-02	(EXC T90)	2	9421330
30.	3-C28	2.880	SOCKET, RR T/SIG LP (PART OF 15) (2.694) (AC-DELCO #LS49) .	98-02	F (T79) (EXPORT)	2	12141493
31.		8.991	BULB, 12V, 32 CP/TRADE #1156 (RR T/SIG LP) (AC-DELCO #L1156)	98-02	(T90)	2	9417866
32.	3-C21	2.694	SOCKET, STOP & T/LP (PART OF 15) (AC-DELCO #LS40)	98-02	F (T90)	2	12141302
33.		8.991	BULB, 12/14V 32-2 C .P. (TAIL & STOP LP) (AC-DELCO #L2057) .	98-02	(T90)	2	9438848
34.	3-C22	2.697	SOCKET, B/U LP (PART OF 15) (2.535) (AC-DELCO #LS39)	98-02	F (T90)	2	12141301
35.		8.991	B/U LP (AC-DELCO #L1141) ...	98-02	.....	2	142456
36.	3-C21	2.694	CONNECTOR, LP-HIGH MT STOP (2-WAY F W/LEADS, W/INDEX TAB OTR EDGE OF CAVITY B) (2.535) (AC-DELCO #PT146)	98-02	F	AR	12085535
	3-C21	2.694	CONNECTOR, LP-HIGH MT STOP (BLACK) (2-WAY M W/LEADS) (2.535) (AC-DELCO #PT103)	98-02	F	1	12085481
37.	3-C21	2.694	CONNECTOR, LP-HIGH MT STOP (PART OF 1, 38) (2-WAY F W/LEADS, W/INDEX TAB OTR EDGE OF CAVITY B) (2.535) (AC-DELCO #PT146)	98-02	F	1	12085535
38.		N.S.	HARNESS, HIGH MT S/LP WRG (INCLS 37, 39) (PART OF 1)		.....		
39.	3-C21	2.694	SOCKET, HIGH MT S/LP (PART OF 1, 38) (W/LEADS) (2.596) (AC-DELCO #LS44)	98-02	F	2	12141388

cardiagn.com

40.		8.991	BULB, WEDGE BASE, 12.8VOLTS, 1.4AMPS, 21CPTRADE NO. 921 (HIGH MT S/LP) (PART OF 1) (AC-DELCO #W16W921)	98-02		2	12450313
41.		8.921	NUT, U TYPE, MULTI THD, PREV TORQ, M4.2X1.41TAP, 8.1REACH, 0.65-3.80 PNLS 1065 PZOR (HIGH MT S/LP) (AC-DELCO #11513599)	98-02		2	11513599
42.	3-C20	2.679	LAMP KIT, RR FOG (INCLS 43)	98-02	F (T79) (EXPORT)	LH	12533323
	3-C20	2.679	LAMP KIT, RR FOG (INCLS 43)	98-02	F (T79) (EXPORT)	RH	12533324
43.		8.921	NUT, STAMPED FITS 6.3 STUD-TYPE B SELF THD STL PC (PART OF 42)	98-02		AR	11502553
44.	3-C20	2.679	LAMP, HIGH MT STOP (INCLS 45, 46) (LED STYLE LAMP, INCLUDES CONNECTOR)	98-02	F (WU8)	1	12369969
45.		8.921	NUT, U TYPE, MULTI THD, PREV TORQ, M4.2X1.41TAP, 8.1REACH, 0.65-3.80 PNLS 1065 PZOR (HIGH MT S/LP) (PART OF 44) (AC-DELCO #11513599)	98-02	(WU8)	3	11513599
46.		8.977	SCREW, PAN HD TORX TAP M4.2X1.41X25 SS BL OX (HIGH MT S/LP) (PART OF 44)	98-02	(WU8)	3	11504662

RPO DEFINITIONS

AQ9 – SEAT,FRONT BUCKET,DRIVER,PASSENGER,RECLINING
LS1 – ENGINE GAS, 8 CYL, 5.7L, SFI, ALUMINUM ENGINE
L36 – ENGINE GAS, 6 CYL, 3.8K, MFI, V6, HO (ERV6 SERIES)
MM6 – TRANSMISSION MAN 6 SPD, BORG WARNER, 85MM, 1ST 2.66, 6TH 0.50, O/D
M49 – TRANSMISSION MAN 5 SPD, BORG WARNER, 77MM, 3.75 1ST, .76 5TH, O/D
T72 – HEADLAMPS,LH RULE OF THE ROAD(EXPORT)
T79 – LAMPS,REAR FOG(EXPORT)
T89 – LAMP,TAIL AND STOP(EXPORT)
T90 – LAMP,SIGNALING AND MARKER(EXPORT)
VJ1 – LICENSE PLATE RR MOUNTING PKG ---- JAPANESE
VL5 – LICENSE PLATE,REAR MOUNTING PACKAGE(EXPORT)
WU8 -- SALES PACKAGE Z28 SS UPFITTER

cardiagn.com

ILLUSTRATION INDEX

	TITLE	GRID
1993	F FUEL SUPPLY SYSTEM	4–E4
1994–1997	F FUEL SUPPLY SYSTEM	4–E7
1998	F FUEL SUPPLY SYSTEM (L36/3.8K)	4–E11
1998	F FUEL SUPPLY SYSTEM (LS1/5.7G)	4–E14
1999–2002	F FUEL SUPPLY SYSTEM	4–E17
1993–1998	F FUEL TANK & MOUNTING	4–E20
1999–2002	F FUEL TANK & MOUNTING	4–E23
1993	F FUEL INJECTOR RAIL (MODEL R815)(LT1/5.7P)	4–E27
1993–1995	F FUEL INJECTOR RAIL (MODEL R610)(L32/3.4S)	4–F2
1994–1997	F FUEL INJECTOR RAIL MPFI (MODEL R816)(5.7P)(LT1)	4–F4
1995–2002	F FUEL INJECTOR RAIL MPFI (MODEL 655)(L36/3.8K)	4–F7
1998–2002	F FUEL INJECTOR RAIL SFI (LS1/5.7G)	4–F9
1993	F THROTTLE BODY (MODEL B210)(LT1/5.7P)	4–F11
1993–1995	F THROTTLE BODY (MODEL B112)(L32/3.4S)	4–F13
1994–1997	F THROTTLE BODY (MODEL B210)(LT1/5.7P)	4–F15
1995	F THROTTLE BODY/MPFI V6 (MODEL RHA57–4B)(L36/3.8K)	4–F17
1996–1998	F THROTTLE BODY/MPFI V6 (MODEL RHA57–4B)(L36/3.8K)(M30 A/TRANS)	4–F19
1996–1998	F THROTTLE BODY/MPFI V6 (MODEL RHA57–4B)(L36/3.8K)(W/M49–MANUAL TRANSMISSION)	4–F21
1998–2002	F THROTTLE BODY/MPFI V6 (MODEL 145)(LS1/5.7G)	4–F23
1999–2002	F THROTTLE BODY/MPFI V6 (MODEL–ELECTRONIC THROTTLE ACTUATION CONTROL–TAC)(L36/3.8K)	4–F25
1993	F AIR INTAKE SYSTEM (LT1/5.7P)	4–F27
1993–1995	F AIR INTAKE SYSTEM (L32/3.4S)	4–G2
1994–1997	F AIR INTAKE SYSTEM (LT1/5.7P)	4–G5
1995–1997	F AIR INTAKE SYSTEM (L36/3.8K)	4–G8
1998–2002	F AIR INTAKE SYSTEM (LS1/5.7G)	4–G10
1998–2002	F AIR INTAKE SYSTEM (L36/3.8K)	4–G12
1993	F ACCELERATOR CONTROL–V6 (L32/3.4S)	4–G14
1993–1994	F ACCELERATOR CONTROL–V8	4–G16
1995–1997	F ACCELERATOR CONTROL (LT1/5.7P EXC NW9)	4–G16
1994–1995	F ACCELERATOR CONTROL–V6 (L32/3.4S)	4–G18
1995–1997	F ACCELERATOR CONTROL–V8 (LT1/5.7P)(NW9)	4–G20
1995–1998	F ACCELERATOR CONTROL–V6 (L36/3.8K)	4–G23
1998–2002	F ACCELERATOR CONTROL–V8 (LS1/5.7G)(EXC NW9)	4–G25
1998–2002	F ACCELERATOR CONTROL–V8 (LS1/5.7G)(NW9)	4–H2
1999–2002	F ACCELERATOR CONTROL–V6 (L36/3.8K)	4–H5
1993–1995	F VAPOR CANISTER LINES & VALVE (L32/3.4S)	4–H7
1993–1995	F VAPOR CANISTER LINES & VALVE (LT1/5.7P)	4–H8
1995–1997	F VAPOR CANISTER LINES & VALVE (L36/3.8K)	4–H10
1996–1997	F VAPOR CANISTER LINES & VALVE (LT1/5.7P)	4–H12
1998	F VAPOR CANISTER LINES & VALVE (L36/3.8K)	4–H14
1998–2002	F VAPOR CANISTER LINES & VALVE (L36/3.8K)	4–H16

cardiagn.com

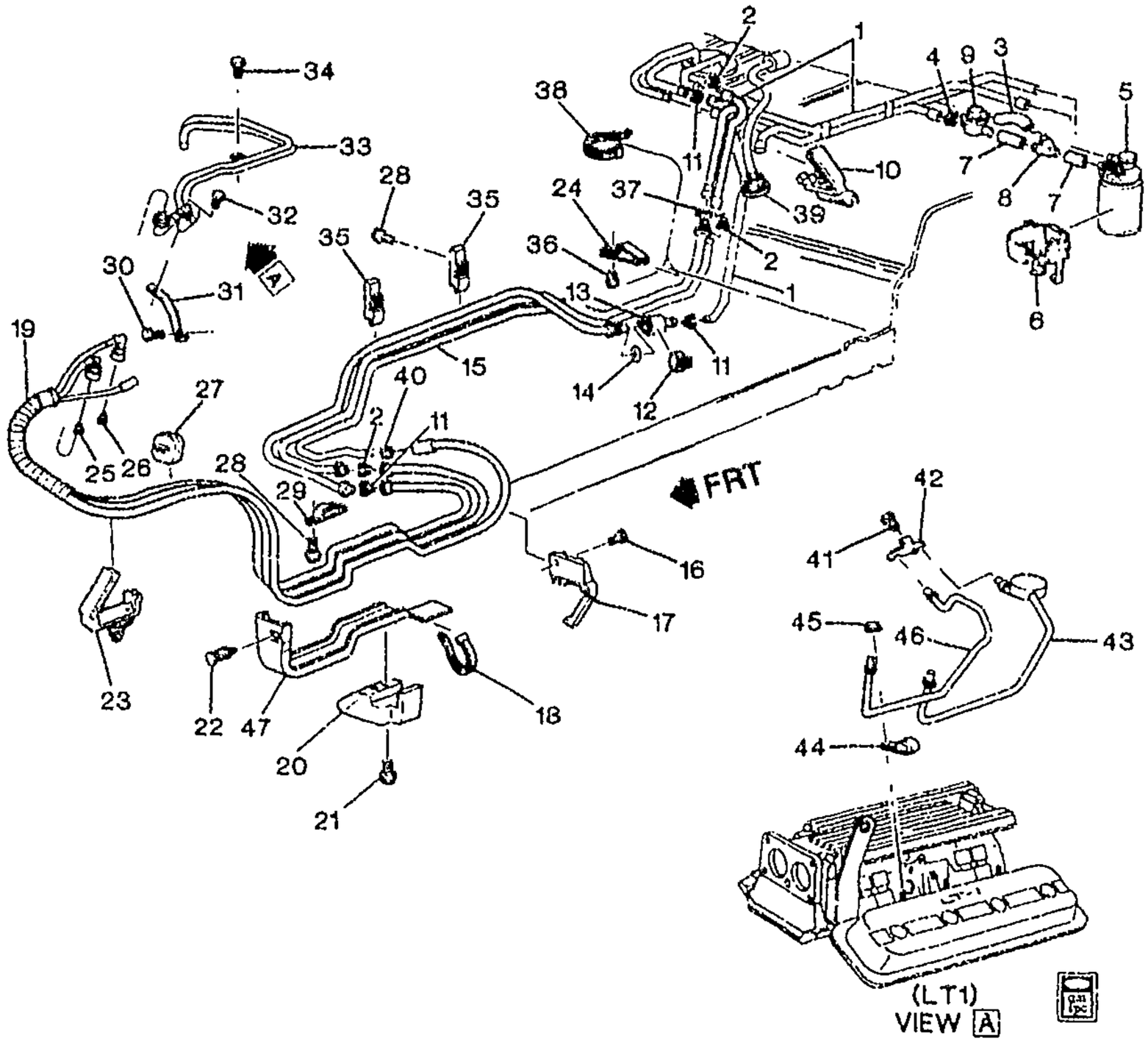

MF03-070

1993 F FUEL SUPPLY SYSTEM

1.	4-A15	3.163	HOSE, FUEL FEED & RTN (INCLS 2, 10, 11, 39)	93	F	1	10251324
2.	4-A14	3.162	RETAINER, FUEL RTN PIPE FTG (PART OF 1, 19) (NATURAL) (NYLON) (5/16") (7.9MM)	93	F	2	15638098
3.		8.962	HOSE, BULK 5/32X25FT (EVAP EMIS CNSTR PURGE)	93	F	AR	9438381
4.		8.948	CLAMP, SIZE 6, .30MIN. - .87MAX - HEX/SLOTTED (EVAP EMIS FRT HOSE)	93	F	1	15620999
5.	4-A11	3.130	CANISTER, EVAP EMIS (AC-DELCO #215-127)	93	F	1	17113065
6.	4-A11	3.130	BRACKET, EVAP EMIS CNSTR	93	F	1	10234809
7.		8.962	HOSE, FUEL-OIL EVAP (EVAP EMIS CNSTR)	93		AR	9438315
8.	4-A12	3.145	CONNECTOR, EVAP EMIS HOSE (3.130)	93	F	1	10046084
9.	4-A11	3.130	VALVE, EVAP EMIS PRESS CONT (AC-DELCO #214-559)	93	F	1	17091151

cardiagn.com

10.		N.S.	CLIP, FUEL FEED & RTN HOSE (PART OF 1)				
11.	4-A15	3.163	CONNECTOR KIT, FUEL FEED PIPE (PART OF 1, 19) (GREEN) (INCLS INST SHT & RET) (USE WITH 3/8 TUBE, NYLON) (3.162)	93	F	1	12522917
12.	4-D15	3.890	BRACKET, FUEL FLTR	93	F	1	10152235
13.	4-D15	3.890	FILTER, FUEL (AC-DELCO #GF627)	93	F	1	25121942
14.	4-A15	3.163	SEAL, FUEL FEED PIPE (O RING) (PART OF 15) (AC-DELCO #217-452)	93	F	1	22514722
15.	4-A15	3.163	PIPE, FUEL FEED & EVAP EMIS & RTN FRT (INCLS 14, 30, 35)	93	F	1	10164156
16.		8.950	RETAINER, FITS .250 HOLE, 1.01LG.700-OD NYLON BLACK (FUEL FEED & RTN PIPE)	93		1	10121502
17.	4-A14	3.162	RETAINER, FUEL FEED & RTN PIPE	93	F87	1	10273047
18.		8.965	STRAP-TIE-7"ADJ (W/ROSEBUD FOR .25 DIA HOLE .031-.14 TH) (FUEL FEED & RTN FRT PIPE) (PART OF 19)	93	F	1	3816659
19.	4-A15	3.163	PIPE, FUEL FEED & RTN (INCLS 2, 11, 18, 22, 25, 26, 27)	93	F87	1	10266081
20.	4-A15	3.163	PROTECTOR, FUEL FEED & EVAP EMIS & RTN PIPE	93	F	2	10232676
	4-A12	3.145	PROTECTOR, FUEL FEED & EVAP EMIS & RTN PIPE (3.163)	93	F	2	10232676
21.		8.977	SCREW, HEX W/FLAT WA (FUEL FEED & EVAP EMIS & RTN PIPE CLIP)	93		4	12337828
22.	4-A14	3.162	RETAINER, FUEL FEED & RTN PIPE (PART OF 19) (3.163)	93	F	1	25558819
23.	4-A14	3.162	CLIP, FUEL FEED & EVAP EMIS & RTN PIPE (U-SHAPED)	93	F	1	10112015
24.	4-A14	3.162	CLIP, FUEL FEED & RTN RR PIPE	93	F	1	10236965
25.		N.S.	RETAINER, FUEL FEED PIPE FTG (PART OF 19)				
26.		N.S.	RETAINER, FUEL RTN PIPE FTG (PART OF 19)				
27.		N.S.	INSULATOR, FUEL FEED & RTN PIPE (PART OF 19)				
28.		8.977	SCREW, HEX W/FLAT WA (FUEL FEED FRT PIPE CLIP)	93		3	12337828
29.	4-A14	3.162	CLIP, FUEL FEED & EVAP EMIS & RTN INTER PIPE	93	F	1	10236965
30.		8.900	BOLT, HEX LARGE FLANGED M6X1X10 PC (PART OF 15)	93	F	1	11508567
31.		N.S.	BRACKET, F/TNK FIL PIPE	93			
32.		8.977	SCREW, HW/H TAP M6.3X1.81X13 13 OD PZOR (FUEL FEED PIPE CLIP)	93	F	1	12338139
33.	4-A15	3.163	PIPE, FUEL FEED & RTN (FRONT) (2-LINE STEEL)	93	F (L32)	1	10191707

cardiagn.com

34.		8.900	BOLT, HFH (M6X1X20 9.8 PZOR (EVAP EMIS CNSTR PURGE SOL VLV BRKT) (AC-DELCO #11508600)	93		1	11508600
35.		N.S.	CLIP, FUEL FEED & EVAP EMIS & RTN INTER PIPE (PART OF 15)				
36.		8.977	SCREW, HEX W/FLAT WA (FUEL FEED RR PIPE CLIP)	93		1	12337828
37.		8.948	CLAMP, SIZE 6, .30MIN. - .87MAX - HEX/SLOTTED (F/TNK VENT HOSE)	93	F	1	15620999
38.		8.965	STRAP-TIE-7"ADJ (W/ROSEBUD FOR .25 DIA HOLE .031-.14 TH) (FUEL FEED RR HOSE)	93		1	3816659
39.	4-A11	3.120	VALVE, F/TNK VENT (PART OF 1) (USE T/W 9438373 & 1648216)	93	F	1	10245442
40.		8.948	CLAMP, SIZE 6, .30MIN. - .87MAX - HEX/SLOTTED (EVAP EMIS FRT HOSE)	93	F	AR	15620999
41.	4-A14	3.162	BOLT, F/INJN FUEL FEED & RTN PIPE CLIP	93	F (LT1)	1	10224231
42.	4-A14	3.162	CLIP, F/INJN FUEL FEED & RTN PIPE	93	F (LT1)	1	10224230
43.	4-A15	3.163	PIPE, F/INJN FUEL FEED	93	F (LT1)	1	10128427
44.	4-A14	3.162	CLIP, FUEL FEED & RTN PIPE	93	F (LT1)	1	10128430
45.		8.917	NUT, .375 16 HEX (FUEL FEED & RTN PIPE CLIP)	93	F	1	14057004
46.	4-A15	3.163	PIPE, F/INJN FUEL RTN	93	F (LT1)	1	10128428
47.	4-A15	3.163	SHIELD, FUEL FEED & RTN FRT PIPE HT	93	F (LT1)	1	10258448

RPO DEFINITIONS
LT1 -- ENGINE-GAS, 8 CYL, 5.7L(5.7P),MFI,HO
L32 -- ENGINE,3.4L,V6,(3.4S),SFI,OHV

cardiagn.com

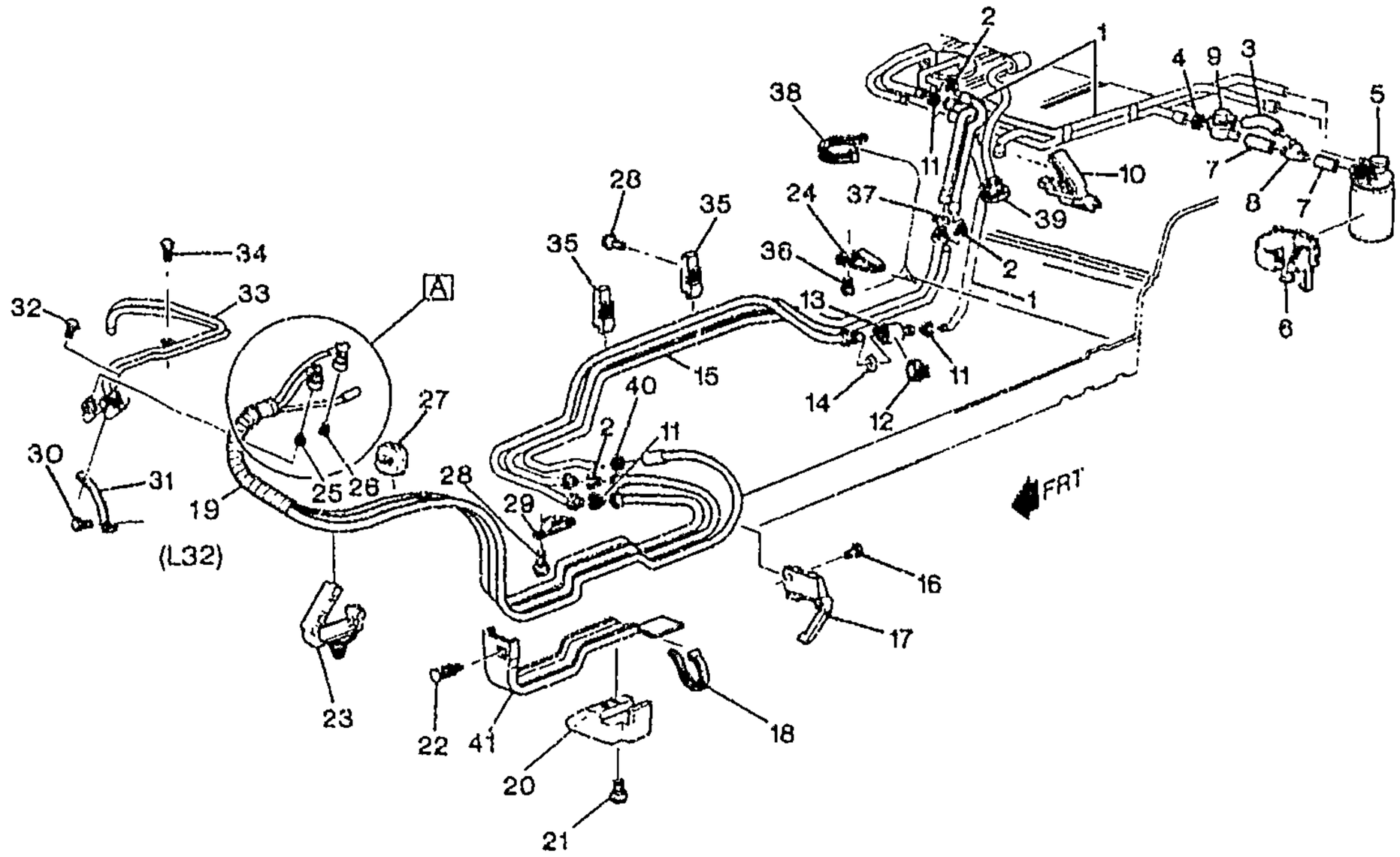

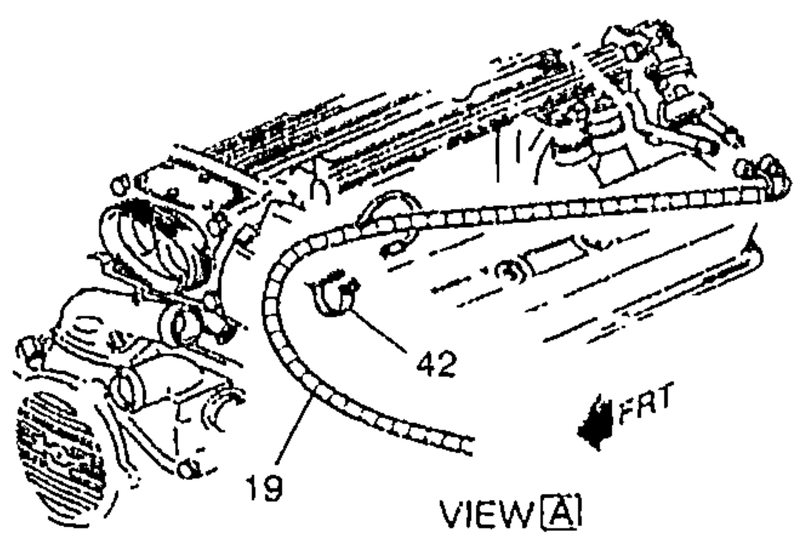

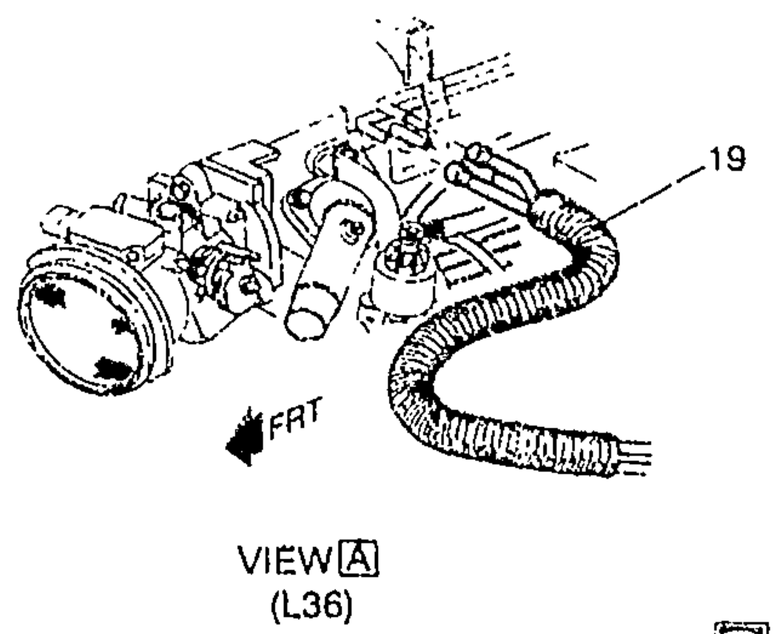

MF03-072

1994-1997 F FUEL SUPPLY SYSTEM

1.	4-A15	3.163	HOSE, FUEL FEED & RTN (INCLS 2, 10, 11, 39)	94-97 F	1	10251324
2.	4-A14	3.162	RETAINER KIT, FUEL RTN PIPE (PART OF 1, 19) (BLUE) (INCLS INST SHT & RET) (USE WITH 5/16 TUBE, NYLON)	94-97		12522916

cardiagn.com

3.		8.962	**HOSE**, BULK 5/32X25FT (EVAP EMIS CNSTR PURGE)	94-97	F	AR	9438381
4.		8.948	**CLAMP**, SIZE 6, .30MIN. - .07MAX - HEX/SLOTTED (EVAP EMIS FRT HOSE)	94-97	F	1	15620999
5.	4-A11	3.130	**CANISTER**, EVAP EMIS (AC-DELCO #215-127)	94-97	F	1	17113065
6.	4-A11	3.130	**BRACKET**, EVAP EMIS CNSTR	94-97	F	1	10234809
7.		8.962	**HOSE**, FUEL-OIL EVAP (EVAP EMIS CNSTR)	94-97		AR	9438315
8.	4-A12	3.145	**CONNECTOR**, EVAP EMIS HOSE (3.130)	94-97	F	1	10046084
	4-A12	3.145	**CONNECTOR**, EVAP EMIS HOSE (90 DEG ELBOW)	96-97	F (L36)	1	12555830
9.	4-A11	3.130	**VALVE**, EVAP EMIS PRESS CONT (AC-DELCO #214-559)	94-97	F	1	17091151
10.		N.S.	**CLIP**, FUEL FEED & RTN HOSE (PART OF 1)				
11.	4-A15	3.163	**CONNECTOR KIT**, FUEL FEED PIPE (PART OF 1, 19) (GREEN) (INCLS INST SHT & RET) (USE WITH 3/8 TUBE, NYLON) (3.162)	94-97	F (LT1)	1	12522917
12.	4-D15	3.890	**BRACKET**, FUEL FLTR	94-97	F	1	10152235
13.	4-D15	3.890	**FILTER**, FUEL (AC-DELCO #GF627)	94-97	F	1	25121942
14.	4-A15	3.163	**SEAL**, FUEL FEED PIPE (O RING) (PART OF 15) (AC-DELCO #217-452)	94-97	F	1	22514722
15.	4-A15	3.163	**PIPE**, FUEL FEED & EVAP EMIS & RTN FRT (INCLS 14, 30, 35)	94-97	F	1	10295276
16.		8.950	**RETAINER**, FITS .250 HOLE, 1.01LG 700-OD NYLON BLACK (FUEL FEED & RTN PIPE)	94-97		1	10121502
17.	4-A14	3.162	**RETAINER**, FUEL FEED & RTN PIPE	94-97	F87	1	10273047
18.		8.965	**STRAP-TIE-7"ADJ** (W/ROSEBUD FOR .25 DIA HOLE .031-.14 TH) (FUEL FEED & RTN FRT PIPE) (PART OF 19)	94-97	F	1	3816659
19.	4-A15	3.163	**PIPE**, FUEL FEED & RTN (INCLS 2, 11, 18, 22, 25, 26, 27)	94-97	F67 (LT1)	1	10258442
	4-A15	3.163	**PIPE**, FUEL FEED & RTN (INCLS 2, 11, 18, 22, 25, 26, 27)	94-97	F87 (LT1)	1	10258441
	4-A15	3.163	**PIPE**, FUEL FEED & RTN (INCLS 2, 11, 18, 22, 25, 26, 27)	95-97	F67 (L36)	1	10285261
	4-A15	3.163	**PIPE**, FUEL FEED & RTN (INCLS 2, 11, 18, 22, 25, 26, 27)	95-97	F87 (L36)	1	10285260
	4-A15	3.163	**PIPE**, FUEL FEED & RTN (INCLS 2, 11, 18, 22, 25, 26, 27)	94-95	F87 (L32)	1	10268081
	4-A15	3.163	**PIPE**, FUEL FEED & RTN (INCLS 2, 11, 18, 22, 25, 26, 27)	94-95	F67 (L32)	1	10268082
20.	4-A12	3.145	**PROTECTOR**, FUEL FEED & EVAP EMIS & RTN PIPE (3.163)	94-97	F	2	10232676
21.		8.977	**SCREW**, HEX W/FLAT WA (FUEL FEED & EVAP EMIS & RTN PIPE CLIP)	94-97		4	12337828
22.	4-A14	3.162	**RETAINER**, FUEL FEED & RTN PIPE (PART OF 19) (3.163)	94-97	F	1	25558819

cardiagn.com

23.	4-A14	3.162	**CLIP**, FUEL FEED & EVAP EMIS & RTN PIPE (U-SHAPED)	94-97	F	1	10112015
24.	4-A14	3.162	**CLIP**, FUEL FEED & RTN RR PIPE	94	F	1	10236965
	4-A[illegible]	3.162	**CLIP**, FUEL FEED & RTN RR PIPE	95-97	F (NW9)	1	10277410
	4-A[illegible]	3.162	**CLIP**, FUEL FEED & RTN RR PIPE	95-97	F (EXC NW9)	1	10288279
25.		N.S.	**RETAINER**, FUEL FEED PIPE FTG (PART OF 19)		.....		
26.		N.S.	**RETAINER**, FUEL RTN PIPE FTG (PART OF 19)		.....		
27.		N.S.	**INSULATOR**, FUEL FEED & RTN PIPE (PART OF 19)		.....		
28.		8.977	**SCREW**, HEX W/FLAT WA (FUEL FEED FRT PIPE CLIP)	94-97	.....	3	12337828
29.	4-A14	3.162	**CLIP**, FUEL FEED & EVAP EMIS & RTN INTER PIPE	94	F	1	10236965
	4-A14	3.162	**CLIP**, FUEL FEED & EVAP EMIS & RTN INTER PIPE	95-97	F (NW9)	1	10277410
	4-A14	3.162	**CLIP**, FUEL FEED & EVAP EMIS & RTN INTER PIPE	95-97	F (EXC NW9)	1	10288279
	4-A12	3.145	**CLIP**, FUEL FEED & EVAP EMIS & RTN INTER PIPE (3.162)	97	F (NW9)	1	10277410
	4-A12	3.145	**CLIP**, FUEL FEED & EVAP EMIS & RTN INTER PIPE (3.162)	97	F (EXC NW9)	1	10288279
30.		8.900	**BOLT**, HEX LARGE FLANGED M6X1X10 PC (PART OF 15)	94-97	F	1	11508567
31.		N.S.	**BRACKET**, F/TNK FIL. PIPE	94-97	.....		
32.		8.977	**SCREW**, HWH TAP M6.3X1.81X13 13 OD PZOR (FUEL FEED PIPE CLIP)	94-97	F	1	12338139
33.	4-A15	3.163	**PIPE**, FUEL FEED & RTN (2-LINE STEEL)	94-97	F	1	10191707
34.		8.900	**BOLT**, HFH (M6X1X20 9.8 PZOR (EVAP EMIS CNSTR PURGE SOL VLV BRKT) (AC-DELCO #11508600)	94-97	.....	1	11508600
35.		N.S.	**CLIP**, FUEL FEED & EVAP EMIS & RTN INTER PIPE (PART OF 15)		.....		
36.		8.977	**SCREW**, HEX W/FLAT WA (FUEL FEED RR PIPE CLIP)	94-97	.....	1	12337828
37.		8.948	**CLAMP**, SIZE 6, .30MIN. - .87MAX - HEX/SLOTTED (F/TNK VENT HOSE)	94-97	F	1	15620999
38.		8.965	**STRAP-TIE-7"ADJ** (W/ROSEBUD FOR .25 DIA HOLE .031-.14 TH) (FUEL FEED RR HOSE)	94-97	.....	1	3816659
39.	4-A11	3.120	**VALVE**, F/TNK VENT (PART OF 1) (USE T/W 9438373 & 1648216) ..	94-97	F	1	10245442
40.		8.948	**CLAMP**, SIZE 6, .30MIN. - .87MAX - HEX/SLOTTED (EVAP EMIS FRT HOSE)	94-97	F	AR	15620999
41.	4-A15	3.163	**SHIELD**, FUEL FEED & RTN FRT PIPE HT	94-97	F (LT1)	1	10258448
	4-A15	3.163	**SHIELD**, FUEL FEED & RTN FRT PIPE HT	94-95	F (L32)	1	10258448

cardiagn.com

	4-A15	3.163	SHIELD, FUEL FEED & RTN FRT PIPE HT	95-97	F (L36)	1	10258448
42.	4-A14	3.162	RETAINER, FUEL FEED & EVAP EMIS & RTN PIPE (9.780)	94-97	F (LT1)	1	12048089

RPO DEFINITIONS

LT1 – ENGINE–GAS, 8 CYL, 5.7L(5.7P),MFI,HO
L32 – ENGINE,3.4L,V6,(3.4S),SFI,OHV
L36 – ENGINE GAS, 6 CYL, 3.8K, MFI, V6, HO (ERV6 SERIES)
NW9 -- TRACTION CONTROL ELECTRONIC

cardiagn.com

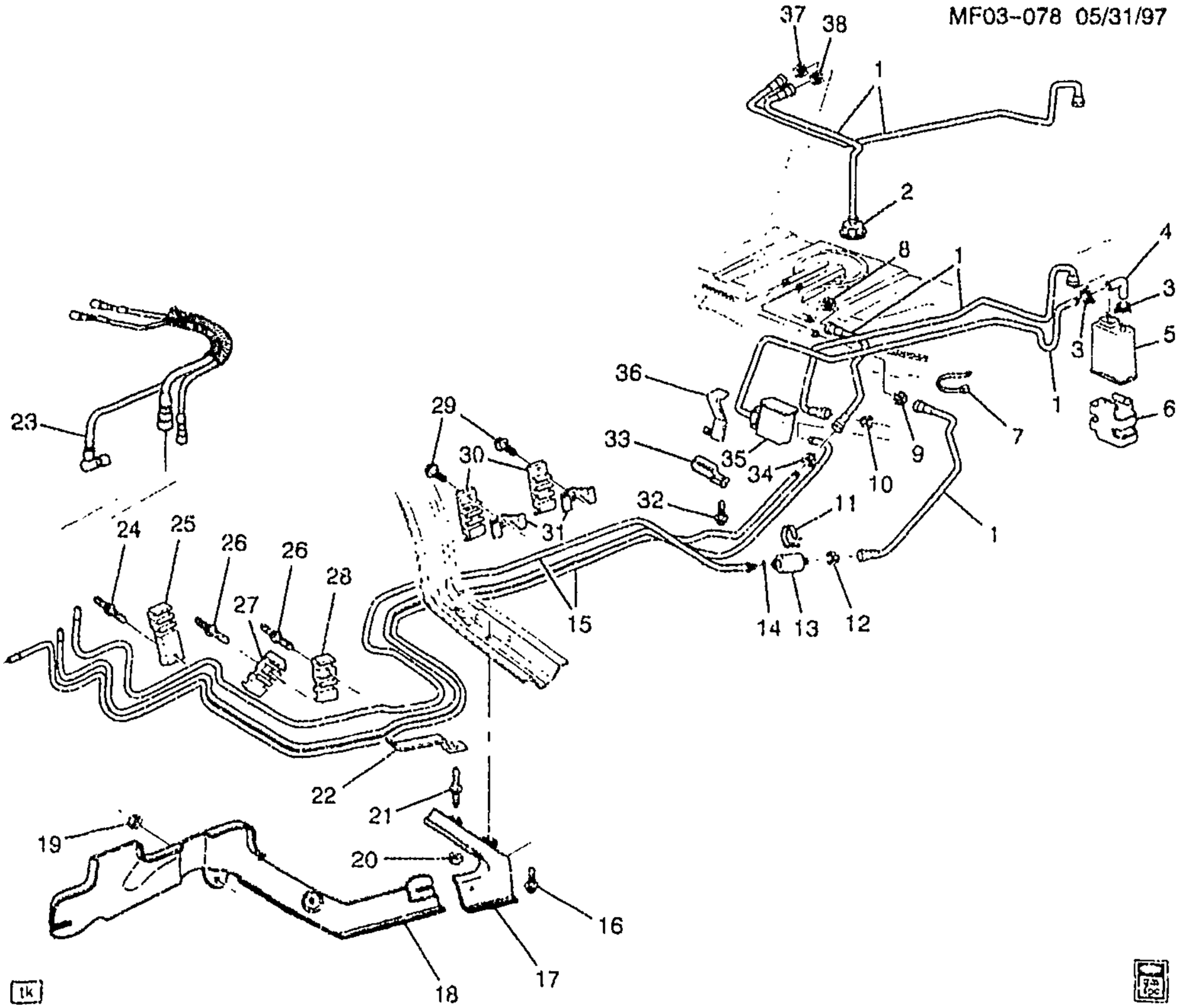

MF03-078

1998 F FUEL SUPPLY SYSTEM (L36/3.8K)

1.	4-A15	3.163	HOSE, FUEL FEED & RTN (INCLS 2, 8, 9, 10, 12, 14, 34, 35, 37, 38)	98 F	1	10406413
2.	4-A11	3.120	VALVE, F/TNK VENT (PART OF 1) (USE T/W 9438373 & 1648216)	98 F	1	10245442
3.		8.948	CLAMP, SIZE 6. .30MIN. -- .87MAX - HEX/SLOTTED (EVAP EMIS)	98 F	2	15620999
4.	4-A11	3.120	HOSE, EVAP EMIS	98 F	1	10406381
5.	4-A11	3.130	CANISTER, EVAP EMIS (AC-DELCO #215-176)	98 F	1	17113327
6.	4-A11	3.130	BRACKET, EVAP EMIS CNSTR	98 F	1	10274604
7.		8.950	STRAP, PLASTIC ADJ TIE (215MM LGTH) (FUEL FEED RR HOSE)	98 F	1	11501906
8.		N.S.	CONNECTOR, FUEL RTN PIPE (PART OF 1)			

cardiagn.com

9.		N.S.	**CONNECTOR**, FUEL FEED PIPE (PART OF 1)				
10.	4-A15	3.163	**CONNECTOR**, FUEL SDR CVR EVAP EMIS (PART OF 1)	98	F	1	10289557
11.	4-D15	3.890	**BRACKET**, FUEL FLTR	98	F	1	10152235
12.		N.S.	**CONNECTOR**, FUEL FEED PIPE (PART OF 1)				
13.	4-D15	3.890	**FILTER**, FUEL (AC-DELCO #GF627)	98	F (L36)	1	25121942
14.	4-A15	3.163	**SEAL**, FUEL FEED PIPE (O RING) (TO PORT) (PART OF 1, 15) (AC-DELCO #217-452)	98	F (L36)	1	22514722
15.	4-A15	3.163	**PIPE**, FUEL FEED & EVAP EMIS & RTN FRT (INCLS 14, 34)	98	F (L36)	1	10424769
16.		8.977	**SCREW**, 6.3X1.81X20 (FUEL HOSE SHLD)	98	F	1	11509051
17.	4-A15	3.163	**SHIELD**, FUEL RR PIPE	98	F	1	10278090
18.	4-A15	3.163	**SHIELD**, FUEL PIPE	98	F	1	10406412
19.		8.917	**NUT**, HEX W/CON WA 6X1X5.5 16-OD ZP 9 (FUEL HOSE SHLD)	98	F	5	11517293
20.		8.917	**NUT**, HEX W/CON WA 6X1X5.5 16-OD ZP 9 (FUEL HOSE SHLD)	98	F	5	11517293
21.	4-A15	3.163	**STUD**, FUEL FEED & RTN FRT PIPE H/SHLD (3.452)	98	F	1	25522171
22.	4-A14	3.162	**CLIP**, FUEL FEED & EVAP EMIS & RTN INTER PIPE	98	F	1	10278177
	4-A12	3.145	**CLIP**, FUEL FEED & EVAP EMIS & RTN INTER PIPE (3.162)	98	F	1	10278177
23.	4-A15	3.163	**PIPE**, FUEL FEED FRT	98	F (L36)	1	10281369
24.	4-A15	3.163	**STUD**, FUEL FEED & RTN FRT PIPE H/SHLD (3.452)	98	F	1	25522171
25.	4-A14	3.162	**RETAINER**, FUEL FEED & EVAP EMIS & RTN FRT PIPE	98	F	1	10288666
26.	4-A15	3.163	**STUD**, FUEL FEED & RTN FRT PIPE H/SHLD	98	F	2	10290570
27.	4-A14	3.162	**RETAINER**, FUEL FEED & EVAP EMIS & RTN FRT PIPE	98	F	1	10290569
28.	4-A14	3.162	**RETAINER**, FUEL FEED & EVAP EMIS & RTN FRT PIPE	98	F	1	10288665
29.		8.977	**SCREW**, 6.3X1.81X20 (FUEL FEED FRT PIPE CLIP)	98		2	11509051
30.	4-A14	3.162	**RETAINER**, FUEL FEED & EVAP EMIS & RTN FRT PIPE	98	F	2	10295174
31.		N.S.	**FLANGE**, FUEL PIPE RETAINER (PART OF FRAME RAIL)				
32.		8.977	**SCREW**, HEX W/FLAT WA (FUEL FEED RR PIPE CLIP)	98	F	1	12337828
33.	4-A14	3.162	**CLIP**, FUEL FEED & RTN RR PIPE	98	F (NW9)	1	10277410
	4-A14	3.162	**CLIP**, FUEL FEED & RTN RR PIPE	98	F (EXC NW9)	1	10288279
34.		N.S.	**CONNECTOR**, FUEL RTN PIPE (PART OF 1, 15)				
35.	4-A11	3.130	**VALVE**, EVAP EMIS CNSTR VENT SOL (PART OF 1)	98	F	1	24574755
36.	4-A11	3.130	**RETAINER**, EVAP EMIS CNSTR VENT VLV DIAPH	98	F	1	10299154

cardiagn.com

							MF03-078
37.		N.S.	CONNECTOR, EVAP EMIS RR HOSE (PART OF 1)		.....		
38.	4-A15	3.163	CONNECTOR, FUEL SDR CVR EVAP EMIS (PART OF 1)	98	F	1	10289567

RPO DEFINITIONS
L36 – ENGINE GAS, 6 CYL, 3.8K, MFI, V6, HO (ERV6 SERIES)
NW9 – TRACTION CONTROL ELECTRONIC

cardiagn.com

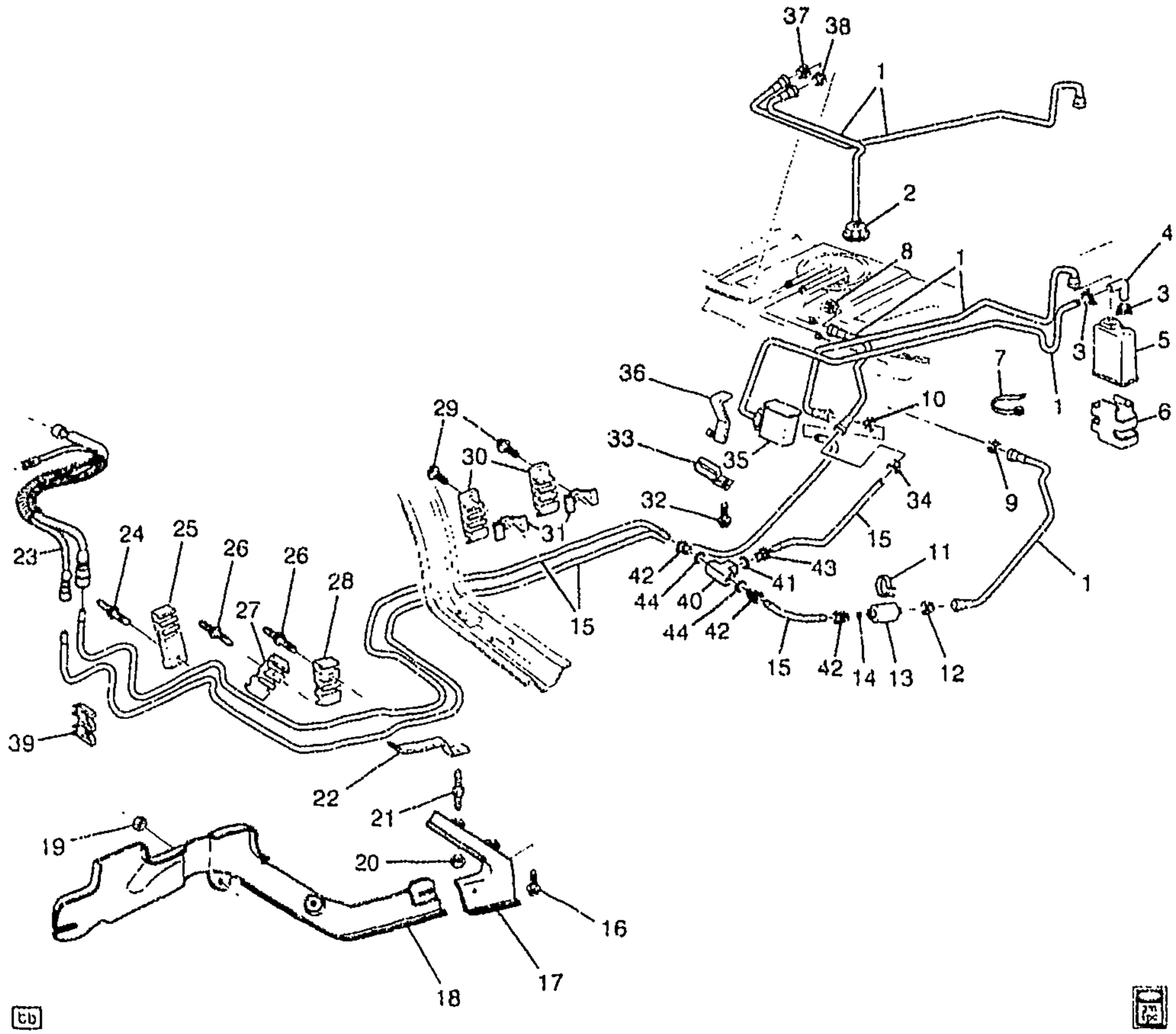

MF03-113

1998 F FUEL SUPPLY SYSTEM (LS1/5.7G)

1.	4--A15	3.163	HOSE, FUEL FEED & RTN (INCLS 2, 8–10, 12, 14, 34, 35, 37, 38, 40, 44)	98 F	1	10406413
2.	4--A11	3.120	VALVE, F/TNK VENT (PART OF 1) (USE T/W 9438373 & 1646216)	98 F	1	10245442
3.		8.948	CLAMP, SIZE 6, .30MIN. -- .87MAX – HEX/SLOTTED (EVAP EMIS)	98 F	2	15620999
4.	4–A11	3.120	HOSE, EVAP EMIS	98 F	1	10406381
5.	4–A11	3.130	CANISTER, EVAP EMIS (AC–DELCO #215–176)	98 F	1	17113327
6.	4--A11	3.130	BRACKET, EVAP EMIS CNSTR	98 F	1	10274604

cardiagn.com

7.		8.950	STRAP, PLASTIC ADJ TIE (215MM LGTH) (FUEL FEED RR HOSE)	98	F	1	11501906
8.		N.S.	CONNECTOR, FUEL RTN PIPE (PART OF 1)				
9.		N.S.	CONNECTOR, FUEL FEED PIPE (PART OF 1)				
10.	4-A15	3.163	CONNECTOR, FUEL SDR CVR EVAP EMIS (PART OF 1)	98	F	1	10289557
11.	4-D15	3.890	BRACKET, FUEL FLTR	98	F	1	10152235
12.		N.S.	CONNECTOR, FUEL FEED PIPE (PART OF 1)				
13.	4-D15	3.890	FILTER, FUEL (AC-DELCO #GF627)	98	F (LS1)	1	25121942
14.	4-A15	3.163	SEAL, FUEL FEED PIPE (O RING) (PART OF 1, 15) (AC-DELCO #217-452)	98	F (LS1)	1	22514722
15.	4-A15	3.163	PIPE, FUEL FEED & EVAP EMIS & RTN FRT (INCLS 14, 34, 40-44)	98	F (LS1)	1	10424768
16.		8.977	SCREW, 6.3X1.81X20 (FUEL HOSE SHLD)	98	F	1	11509051
17.	4-A15	3.163	SHIELD, FUEL RR PIPE	98	F	1	10278090
18.	4-A15	3.163	SHIELD, FUEL PIPE	98	F	1	10406412
19.		8.917	NUT, HEX W/CON WA 6X1X5.5 16-OD ZP 9 (FUEL HOSE SHLD)	98	F	5	11517293
20.		8.917	NUT, HEX W/CON WA 6X1X5.5 16-OD ZP 9 (FUEL HOSE SHLD)	98	F	5	11517293
21.	4-A15	3.163	STUD, FUEL FEED & RTN FRT PIPE H/SHLD (3.452)	98	F	1	25522171
22.	4-A14	3.162	CLIP, FUEL FEED & EVAP EMIS & RTN INTER PIPE	98	F	1	10278177
	4-A12	3.145	CLIP, FUEL FEED & EVAP EMIS & RTN INTER PIPE (3.162)	98	F	1	10278177
23.	4-A15	3.163	PIPE, FUEL FEED FRT	98	F (LS1)	1	10423252
24.	4-A15	3.163	STUD, FUEL FEED & RTN FRT PIPE H/SHLD (3.452)	98	F	1	25522171
25.	4-A14	3.162	RETAINER, FUEL FEED & EVAP EMIS & RTN FRT PIPE	98	F	2	10288666
26.	4-A15	3.163	STUD, FUEL FEED & RTN FRT PIPE H/SHLD	98	F	1	10290570
27.	4-A14	3.162	RETAINER, FUEL FEED & EVAP EMIS & RTN FRT PIPE	98	F	2	10290569
28.	4-A14	3.162	RETAINER, FUEL FEED & EVAP EMIS & RTN FRT PIPE	98	F	2	10288665
29.		8.977	SCREW, 6.3X1.81X20 (FUEL FEED FRT PIPE CLIP)	98	F	2	11509051
30.	4-A14	3.162	RETAINER, FUEL FEED & EVAP EMIS & RTN FRT PIPE	98	F	2	10295174
31.		N.S.	FLANGE, FUEL PIPE RETAINER (PART OF FRAME RAIL)				
32.		8.977	SCREW, HEX W/FLAT WA (FUEL FEED RR PIPE CLIP)	98	F	1	12337828
33.	4-A14	3.162	CLIP, FUEL FEED & RTN RR PIPE	98	F (NW9)	1	10277410
	4-A14	3.162	CLIP, FUEL FEED & RTN RR PIPE	98	F (EXC NW9)	1	10288279
34.		N.S.	CONNECTOR, FUEL RTN PIPE (PART OF 1, 15)				

cardiagn.com

35.	4–A11	3.130	**VALVE**, EVAP EMIS CNSTR VENT SOL (PART OF 1)	98	F	1	24574755
36.	4–A11	3.130	**RETAINER**, EVAP EMIS CNSTR VENT VLV DIAPH	98	F	1	10299154
37.		N.S.	**CONNECTOR**, EVAP EMIS RR HOSE (PART OF 1)				
38.	4–A15	3.163	**CONNECTOR**, FUEL SDR CVR EVAP EMIS (PART OF 1)	98	F	1	10289557
39.	4–A14	3.162	**RETAINER**, FUEL FEED & EVAP EMIS & RTN FRT PIPE (2–TUBE)	98	F	2	10284877
40.		N.S.	**FITTING**, FUEL TRANSFER (STAINLESS STEEL SAE 303) (PART OF 1, 15				
41.	4–A15	3.163	**SEAL**, FUEL FEED PIPE (O RING) (PART OF 15) (AC–DELCO #22516256)	98	F (LS1)	1	22516256
42.		N.S.	**NUT**, FUEL FEED & EVAP EMIS & RTN PIPE CLIP (PART OF 15)			3	
43.		N.S.	**NUT**, FUEL FEED & EVAP EMIS & RTN PIPE CLIP (PART OF 15)			1	
44.	4–A15	3.163	**SEAL**, FUEL FEED PIPE (O RING) (PART OF 1, 15) (AC–DELCO #217–452)	98	F (LS1)	2	22514722

RPO DEFINITIONS
LS1 – ENGINE GAS, 8 CYL, 5.7L, SFI, ALUMINUM ENGINE
NW9 – TRACTION CONTROL ELECTRONIC

cardiagn.com

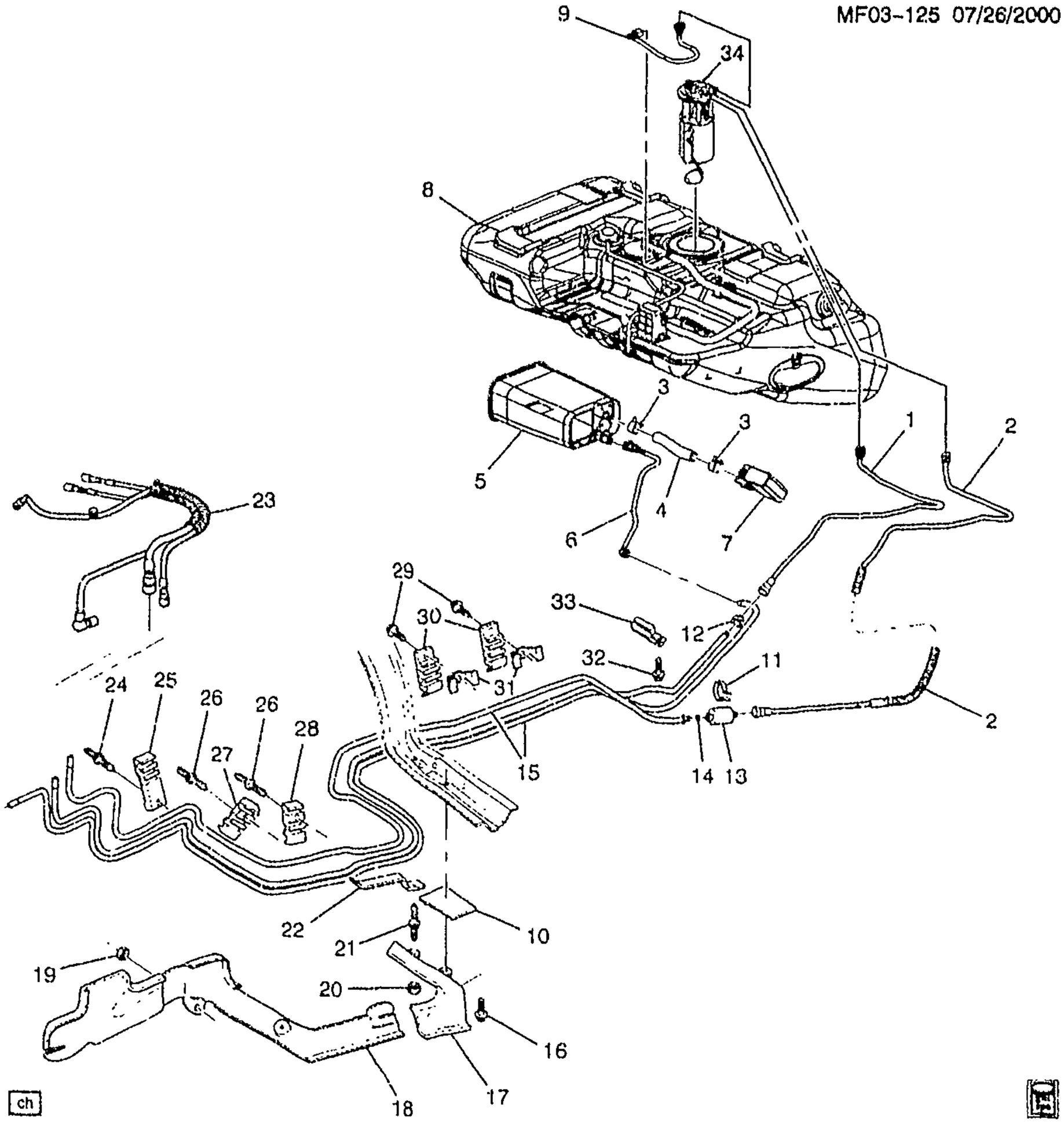

MF03-125

1999-2002 F FUEL SUPPLY SYSTEM

1.	4-A15	3.163	PIPE, FUEL SDR CVR FUEL RTN	99-02	F	1	10409861
2.	4-A15	3.163	PIPE, FUEL SDR CVR FUEL FEED	99-02	F	1	10409885
3.		8.948	CLAMP, SIZE 6, .30MIN. - .87MAX - HEX/SLOTTED (EVAP EMIS CNSTR VENT)	99-02	F	2	15620999
4.	4-A11	3.120	HOSE, EVAP EMIS CNSTR VENT	99-02	F	1	10409865

cardiagn.com

5.	4-A11	3.130	CANISTER, EVAP EMIS (AC-DELCO #215-181)	99-02	F	1	17113332
6.	4-A12	3.145	PIPE, EVAP EMIS CNSTR PURGE	99-02	F (LS1)	1	10409862
	4-A12	3.145	PIPE, EVAP EMIS CNSTR PURGE	99-02	F (L36)	1	10409862
7.	4-A11	3.130	VALVE, EVAP EMIS CNSTR PURGE SOL (AC-DELCO #214-641)	99-02	F (LS1)	1	1997278
	4-A11	3.130	VALVE, EVAP EMIS CNSTR PURGE SOL (LOCATION AT INTAKE MANIFOLD) (AC-DELCO #214-646)	99-02	F (L36)	1	1997279
	4-A11	3.130	VALVE, EVAP EMIS CNSTR PURGE SOL (LOCATION NEAR ENGINE INTAKE MANIFOLD (FROM THROTTLE BODY) (AC-DELCO #214-641)	99-02	F (L36)	1	1997278
8.	4-A8	3.001	TANK, FUEL	99-02	F	1	10422917
	4-A8	3.001	TANK, FUEL (BLUE) (14.865)	02	F (L36)	1	12077979
9.	4-A12	3.145	PIPE, EVAP EMIS	99-02	F	1	10409887
10.	4-N26	12.980	DEADENER, FLR PNL	99	F	1	10249163
	4-N26	12.980	DEADENER, FLR PNL	00-02	F	1	10249163
11.	4-D15	3.890	BRACKET, FUEL FLTR	99-02	F	1	10152235
12.		N.S.	CONNECTOR, FUEL RTN PIPE (PART OF 1)				
13.	4-D15	3.890	FILTER, FUEL (AC-DELCO #GF627)	99-02	F	1	25121942
14.	4-A15	3.163	SEAL, FUEL FEED PIPE (O RING) (TO PORT) (PART OF 15) (AC-DELCO #217-452)	99-02	F (LS1)	2	22514722
	4-A15	3.163	SEAL, FUEL FEED PIPE (O RING) (TO PORT) (PART OF 15) (AC-DELCO #217-452)	99-02	F (L36)	1	22514722
	4-A15	3.163	SEAL, FUEL FEED PIPE (O RING) (TO PORT) (PART OF 15) (AC-DELCO #22516256)	99-02	F (LS1)	1	22516256
	4-A15	3.163	SEAL, FUEL FEED PIPE (O RING) (TO REAR PIPE) (PART OF 15) (AC-DELCO #217-452)	99-02	F (LS1)	1	22514722
15.	4-A15	3.163	PIPE, FUEL FEED & EVAP EMIS & RTN FRT (INCLS 12, 14, 25, 27, 28, 30)	99-02	F (L36)	1	10424769
16.		8.977	SCREW, 6.3X1.81X20 (FUEL HOSE SHLD)	99-02	F	1	11509051
17.	4-A15	3.163	SHIELD, FUEL RR PIPE	99-02	F	1	10278090
18.	4-A15	3.163	SHIELD, FUEL PIPE	99-02	F	1	10406412
19.		8.917	NUT, HEX W/CON WA 6X1X5.5 16-OD ZP 9 (FUEL HOSE SHLD)	99-02	F	5	11517293
20.		8.917	NUT, HEX W/CON WA 6X1X5.5 16-OD ZP 9 (FUEL HOSE SHLD)	99-02	F	5	11517293
21.	4-A15	3.163	STUD, FUEL FEED & RTN FRT PIPE H/SHLD (3.452)	99-02	F	1	25522171
22.	4-A14	3.162	CLIP, FUEL FEED & EVAP EMIS & RTN INTER PIPE	99-02	F	1	10278177
	4-A12	3.145	CLIP, FUEL FEED & EVAP EMIS & RTN INTER PIPE (3.162)	99-02	F	1	10278177
23.	4-A15	3.163	PIPE, FUEL FEED FRT	99-02	F (L36)	1	10291925

cardiagn.com

24.	4-A15	3.163	STUD, FUEL FEED & RTN FRT PIPE H/SHLD (3.452)	99-02	F	1	25522171
25.	4-A14	3.162	RETAINER, FUEL FEED & EVAP EMIS & RTN FRT PIPE (PART OF 15)	99-02	F	1	10288666
26.	4-A15	3.163	STUD, FUEL FEED & RTN FRT PIPE H/SHLD	99-02	F	2	10290570
27.	4-A14	3.162	RETAINER, FUEL FEED & EVAP EMIS & RTN FRT PIPE (PART OF 15)	99-02	F	1	10290569
28.	4-A14	3.162	RETAINER, FUEL FEED & EVAP EMIS & RTN FRT PIPE (PART OF 15)	99-02	F	1	10288665
29.		8.977	SCREW, 6.3X1.81X20 (FUEL FEED FRT PIPE CLIP)	99-02		2	11509051
30.	4-A14	3.162	RETAINER, FUEL FEED & EVAP EMIS & RTN FRT PIPE (PART OF 15)	99-02	F	2	10295174
31.		N.S.	FLANGE, FUEL PIPE RETAINER (PART OF FRAME RAIL)				
32.		8.977	SCREW, HEX W/FLAT WA (FUEL FEED RR PIPE CLIP)	99-02	F	1	12337828
33.	4-A14	3.162	CLIP, FUEL FEED & RTN RR PIPE	99-02	F (LS1, NW9)	1	10277410
	4-A14	3.162	CLIP, FUEL FEED & RTN RR PIPE	99-02	F (LS1) (EXC NW9)	1	10288279
	4-A14	3.162	CLIP, FUEL FEED & RTN RR PIPE	99-02	F (L36)	1	10288279
34.	4-A9	3.107	SENSOR KIT, FUEL LVL	99-02	F (L36)	1	25316321
	4-A9	3.107	SENSOR KIT, FUEL LVL	99-02	F (LS1)	1	25323815

RPO DEFINITIONS
LS1 - ENGINE GAS, 8 CYL, 5.7L, SFI, ALUMINUM ENGINE
L36 - ENGINE GAS, 6 CYL, 3.8K, MFI, V6, HO (ERV6 SERIES)
NW9 - TRACTION CONTROL ELECTRONIC

cardiagn.com

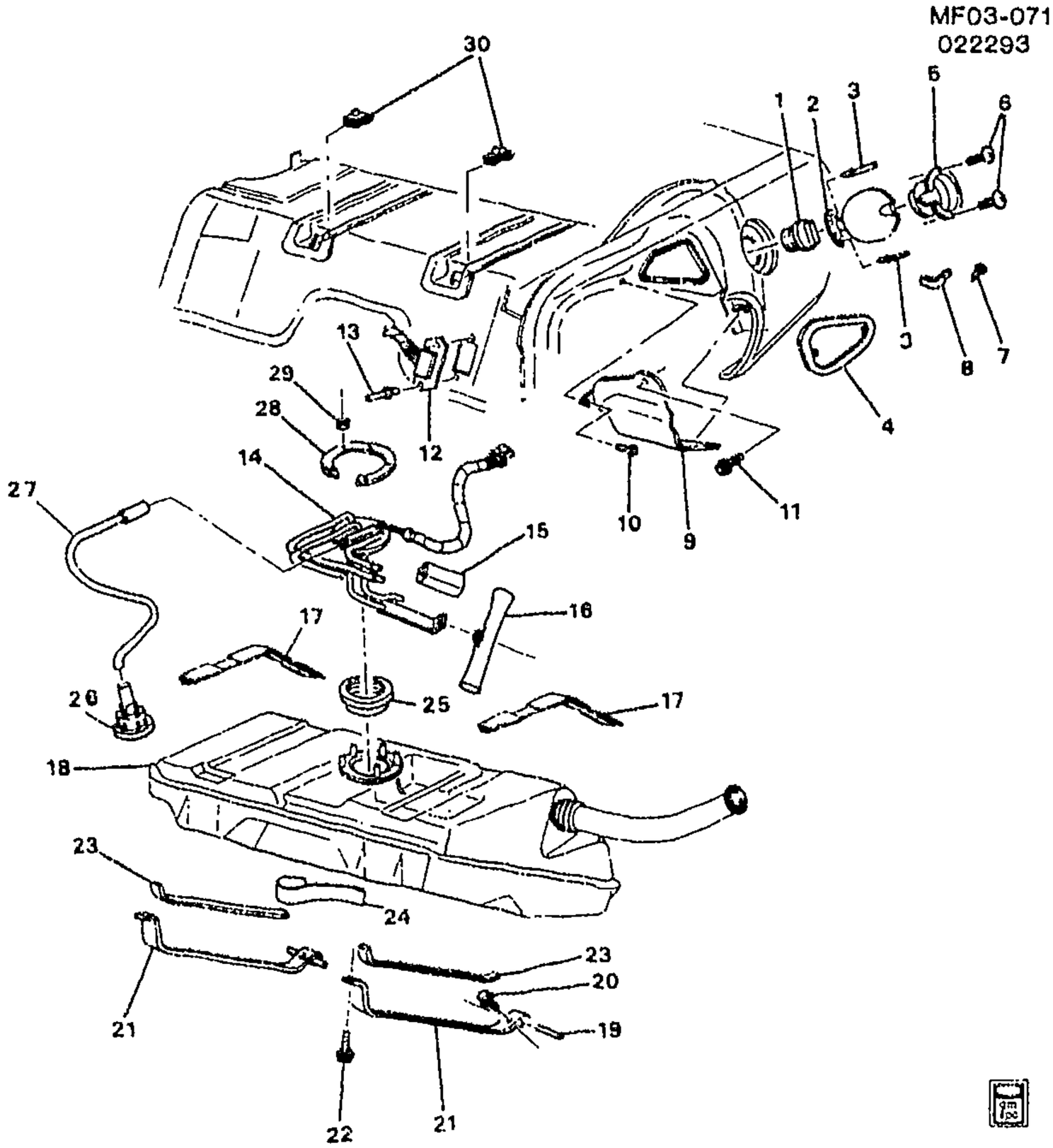

MF03-071

1993-1998 F FUEL TANK & MOUNTING

1.	4-A9	3.028	CAP, F/TNK FIL (AC-DELCO #GT222)	98	F	1	22616291
	4-A9	3.028	CAP, F/TNK FIL (W/HDL) (AC-DELCO #GT174)	93-97	F (GAS)	1	10164142
2.	4-N25	12.945	DOOR, F/TNK FIL (INCLS 7, 8)	93-97	F	1	16629244
	4-N25	12.945	DOOR, F/TNK FIL (INCLS 7, 8)	98	F	1	10264454
3.		8.967	RIVET, BLIND LG DOME, 1/8X0.255, 0.129- 0.133HOLE, 0.063-0.125 GRIP, 0.375 HD ODSTL, PZOR (F/TNK FIL DR HGE)	93-98	F	4	9441669
4.	4-N25	12.945	SEALING STRIP, F/TNK FIL DR OPG FIL	93-98	F	1	10406358
	4-N25	12.945	SEALING STRIP, F/TNK FIL DR OPG FIL	93-98	F	1	12399117

cardiagn.com

5.	4-A8	3.003	HOUSING, F/TNK FIL PIPE (INCLS 7)	93-98	F	1	10429538
	4-A8	3.003	HOUSING, F/TNK FIL PIPE (INCLS 7) (12.945)	94-97	F (NM8) (EXPORT)	1	10267996
6.		8.977	SCREW, LG RND WA HD W/BLK NYL WA, 4.2X 1.41X13, 11-OD, DRILL PT, 6172, PEOR (F/TNK FIL PKT)	93-98	F	2	10180421
7.	4-N25	12.945	BUMPER, F/TNK FIL DR (ON DOOR) (PART OF 2) (10.242)	93-98	F	1	10172357
	4-N25	12.945	BUMPER, F/TNK FIL DR (ON POCKET) (PART OF 5)	93-98	F	2	10257216
8.	4-N25	12.945	SPRING, F/TNK FIL DR (PART OF 2)	93-98	F	1	16622792
9.	4-A8	3.003	SHIELD, F/TNK FIL PIPE	93-98	F	1	10132511
10.	4-A8	3.003	RETAINER, F/TNK FIL PIPE SHLD (BLACK) (PUSH IN W/SCREW) (6.3MM DIA X 23MM) (1.276)	93-98	F	1	20664092
11.		8.977	BOLT, SCR HEX W/FLAT WA 12 DIA TYPE AB (F/TNK FIL PIPE SHLD)	93-98	F	1	11509374
12.		N.S.	CONNECTOR, SDR-FUEL				
13.		N.S.	RIVET, FUEL SDR WRG HARN CONN				
14.	4-A9	3.107	SENDER, FUEL (W/O PUMP) (AC-DELCO #25160326)	93-95	F	1	25160326
	4-A9	3.107	MODULE, F/TNK F/PMP (INCLS 15, 16) (INCLS F/PUMP) (AC-DELCO #MU18)	96-97	F (L36)	1	25164520
	4-D15	3.900	MODULE, F/TNK F/PMP (INCLS 15, 16) (INCLS F/PUMP) (3.107) (AC-DELCO #MU18)	96-97	F (L36)	1	25164520
	4-A9	3.107	MODULE, F/TNK F/PMP (INCLS 15, 16) (INCLS F/PUMP) (AC-DELCO #MU19)	96-97	F (LT1)	1	25164521
	4-D15	3.900	MODULE, F/TNK F/PMP (INCLS 15, 16) (INCLS F/PUMP) (3.107) (AC-DELCO #MU19)	96-97	F (LT1)	1	25164521
	4-A9	3.107	MODULE KIT, F/TNK F/PMP (INCLS 15, 16) (AC-DELCO #MU195)	98	F (LS1)	1	25319351
	4-D15	3.900	MODULE KIT, F/TNK F/PMP (INCLS 15, 16) (3.107) (AC-DELCO #MU195)	98	F (LS1)	1	25319351
15.	4-D15	3.900	PUMP, FUEL (PART OF 14) (AC-DELCO #43-914)	93-95	F (LT1)	1	25160334
	4-D15	3.900	PUMP, FUEL (PART OF 14) (AC-DELCO #43-915)	95	F (L36)	1	25160336
		N.S.	PUMP, FUEL (PART OF 14)	96-98			
	4-D15	3.900	PUMP, FUEL (PART OF 14) (AC-DELCO #43-913)	93-95	F (L32)	1	25160330
16.	4-A10	3.110	STRAINER KIT, FUEL (PART OF 14) (AC-DELCO #TS44)	93-95	F	1	25139035
		N.S.	STRAINER, FUEL SDR FUEL (PART OF 14)	96-97			
	4-A10	3.110	STRAINER KIT, FUEL (PART OF 14) (AC-DELCO #TS44)	98	F (L36)	1	25139035

cardiagn.com

	4-A10	3.110	STRAINER KIT, FUEL (PART OF 14) (AC-DELCO #TS101)	98	F (LS1)	1	25178845
17.		N.S.	INSULATOR, F/TNK				
18.	4-A8	3.001	TANK, FUEL	93	F	1	10269093
	4-A8	3.001	TANK, FUEL	94-97	F (EXC NM8)	1	10269093
	4-A8	3.001	TANK, FUEL	98	F (EXC NM8)	1	10293379
	4-A8	3.001	TANK, FUEL	98	F (NM8)	1	10293380
	4-A8	3.001	TANK, FUEL	94-96	F (NM8) (EXPORT)	1	10269094
19.	4-A8	3.015	PIN, F/TNK SUPT REINF BOLT COT (PART OF 21 (USED W/ F/TNK STRAP 10239827) (3.022)	93-98	F	2	10018707
20.	4-A9	3.023	BOLT, F/TNK CR STRP (PART OF 21) (USED W/ F/TNK STRAP 10270429) (M8X1.25X15 POR)	93-98	F	1	14060161
21.	4-A8	3.022	STRAP, F/TNK PROTR (INCLS 19, 20) (W/INSL)	93-98	F	2	10270429
22.	4-A9	3.023	BOLT, F/TNK STRP (10X1.5X50)	93-98	F	2	25537061
23.		N.S.	INSULATOR, F/TNK				
24.		N.S.	INSULATOR, F/TNK				
25.	4-A10	3.112	SEAL, FUEL SDR (O RING) (AC-DELCO #G3)	93-98	F	1	10152293
26.		N.S.	VALVE, F/TNK VENT (PART OF 27)				
27.	4-A11	3.120	VALVE, F/TNK VENT (INCLS 26) (USE T/W 9438373 & 1648216)	93-98	F	1	10245442
28.	4-A9	3.107	RING, FUEL SDR RET (AC-DELCO #TR15)	93-98	F	1	10218922
29.		8.915	NUT, M5X.8, 5 THK, 9M, PEOR (FUEL SDR RING)	93-98	F	5	11509203
30.		8.921	NUT, U-SHAPE M10X1.5 THD POR 33 LONG (F/TNK STRP) (3.023)	93-98	F	2	22531616

RPO DEFINITIONS
LS1 – ENGINE GAS, 8 CYL, 5.7L, SFI, ALUMINUM ENGINE
LT1 – ENGINE-GAS, 8 CYL, 5.7L(5.7P),MFI,HO
L32 – ENGINE,3.4L,V6,(3.4S),SFI,OHV
L36 – ENGINE GAS, 6 CYL, 3.8K, MFI, V6, HO (ERV6 SERIES)
NM8 – EMISSION SYSTEM,LEADED FUEL(EXPORT)

cardiagn.com

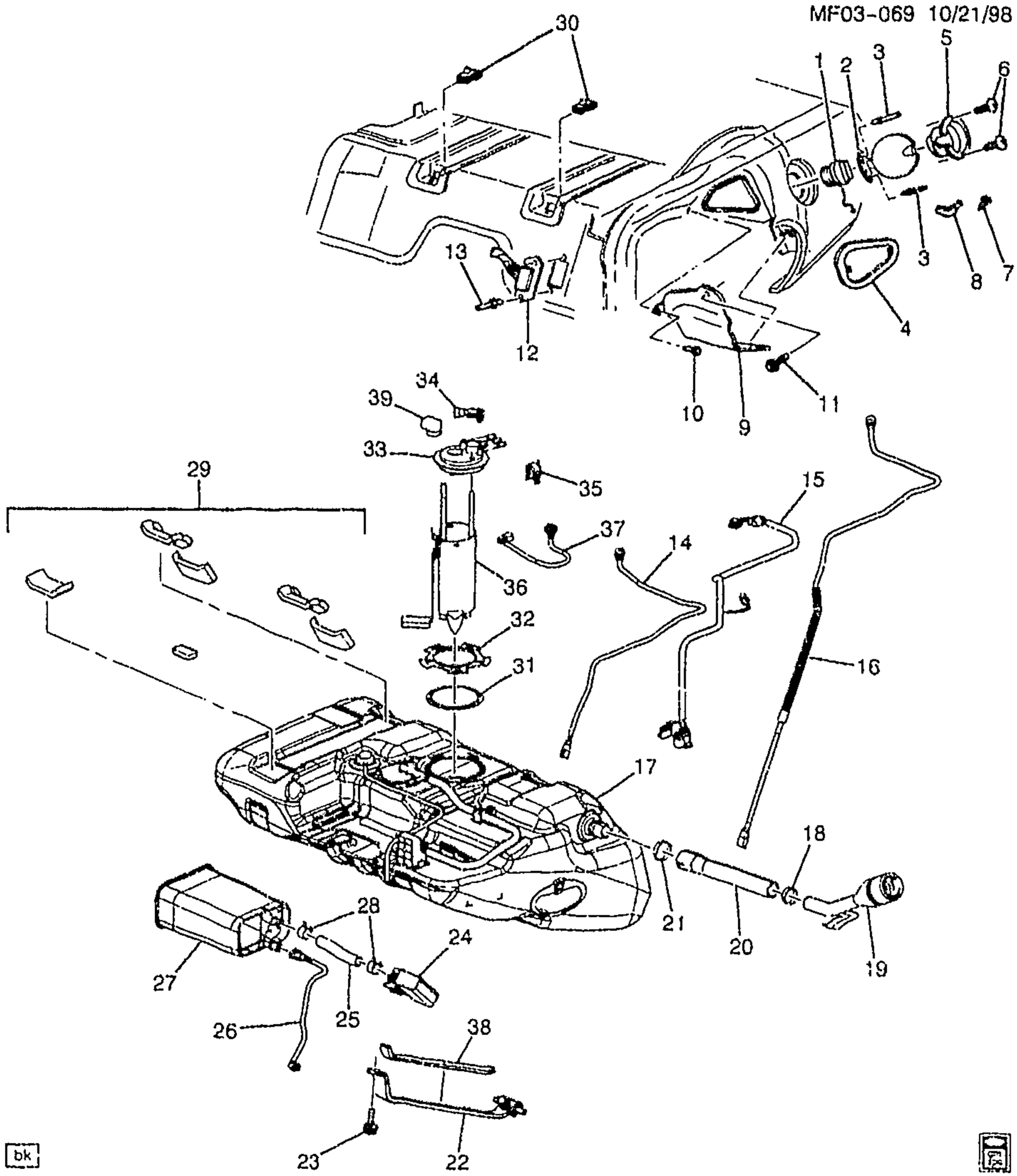

MF03-069

1999-2002 F FUEL TANK & MOUNTING

1.	4-A9	3.028	CAP, F/TNK FIL (W/HDL) (STRAP) (AC-DELCO #22616287)	99-02	F 1	22616287
	4-A9	3.028	CAP, F/TNK FIL (W/HDL) (AC-DELCO #22616286)	01-02	F 1	22616286
2.	4-N25	12.945	DOOR, F/TNK FIL (INCLS 7, 8) ..	99-02	F 1	10284454

cardiagn.com

3.		8.969	RIVET, TYPE P-DOME HD BL OL 1 7/16 DIA 5/64 HOLE 1/8 STL ZC (F/TNK FIL DR HGE) (8.967)	99-02	F	4	9426957
4.	4-N25	12.945	SEALING STRIP, F/TNK FIL DR OPG FIL	99-02	F	1	12399117
	4-N25	12.945	SEALING STRIP, F/TNK FIL DR OPG FIL	99-02	F	1	10406358
5.	4-A8	3.003	HOUSING, F/TNK FIL PIPE (INCLS 7)	99-00	F	1	10429538
	4-A8	3.003	HOUSING, F/TNK FIL PIPE (INCLS 7)	01-02	F	1	10315913
6.		8.977	SCREW-ROUNDWASHER M4.2X1.4X13, 8.63OD, 6010M, 6138M, C/R, TAP (F/TNK FIL PKT)	99-02	F	2	11515893
7.	4-N25	12.945	BUMPER, F/TNK FIL DR (ON DOOR) (PART OF 2) (10.242)	99-02	F	1	10172357
	4-N25	12.945	BUMPER, F/TNK FIL DR (ON POCKET) (PART OF 5)	99-02	F	2	10257216
8.	4-N25	12.945	SPRING, F/TNK FIL DR (PART OF 2)	99-02	F	1	16622792
9.	4-A8	3.003	SHIELD, F/TNK FIL PIPE	99-02	F	1	10132511
10.	4-A8	3.003	RETAINER, F/TNK FIL PIPE SHLD (BLACK) (PUSH IN W/SCREW) (6.3MM DIA X 23MM) (1.276)	99-02	F	1	20664092
11.		8.977	BOLT, SCR HEX W/FLAT WA 12 DIA TYPE AB (F/TNK FIL PIPE SHLD)	99-02	F	1	11509374
12.		N.S.	CONNECTOR, SDR-FUEL				
13.		8.967	RIVET (FUEL SDR WRG HARN CONN)	99-02	F	2	2477054
14.	4-A15	3.163	PIPE, FUEL SDR CVR FUEL RTN	99-02	F	1	10409861
	4-A15	3.163	CONNECTOR KIT, FUEL FEED PIPE (GREEN) (INCLS INST SHT & RET) (USE WITH 3/8 TUBE, NYLON) (3.162)	99-02	F	1	12522917
15.	4-A10	3.115	HARNESS, FUEL SDR WRG	99-02	F	1	15325840
	4-N26	13.100	CONNECTOR, INLINE-TO RR BODY HARN (4-WAY F) (W/LEADS, IN A ROW) (4.651) (AC-DELCO #PT368)	99-02	F	2	12102741
	4-N26	13.100	CONNECTOR, INLINE-TO RR BODY HARN (7-WAY F M/P 280) (W/LEADS) (AC-DELCO #PT1226)	99-02	F	2	15306064
	4-A9	3.107	CONNECTOR, SEN-F/TNK PRESS (BLACK) (3-WAY F) (W/LEADS) (2.535) (AC-DELCO #PT117)	99-02	F	1	12085495
	4-A12	3.140	CONNECTOR, SOL-EVAP EMIS CNSTR PURGE VLV (RED) (2-WAY F W/LEADS) (2.535) (AC-DELCO #PT250)	99-02	F (LS1, L36)	1	12101858
	4-N14	2.530	CONNECTOR, INLINE-TO F/TNK HARN (W/LEADS) (4-WAY F) (M/P 150 SLD) (18GA WIRE) (3.900) (AC-DELCO #PT1017)	99-02	F	2	15305876

cardiagn.com

16.	4-A15	3.163	PIPE, FUEL SDR CVR FUEL FEED	99-02	F	1	10409885
17.	4-A8	3.001	TANK, FUEL	99-02	F	1	10422917
	4-A8	3.001	TANK, FUEL (BLUE) (14.865)	02	F (L36)	1	12077979
18.	4-A8	3.003	CLAMP, F/TNK FIL HOSE UPR	99-02	F (LS1, L36)	1	10409871
	4-A8	3.003	CLAMP, F/TNK FIL HOSE UPR	99	F (LS1, NM2) (EXPORT)	1	10409870
19.	4-A8	3.003	PIPE, F/TNK FIL	99-02	F	1	10409867
	4-A8	3.003	PIPE, F/TNK FIL	99	F (LS1, NM8) (EXPORT)	1	10409868
20.	4-A8	3.003	HOSE, F/TNK FIL	99-02	F	1	10409866
21.	4-A8	3.003	CLAMP, F/TNK FIL HOSE LWR	99-02	F (LS1, L36)	1	10409870
	4-A8	3.003	CLAMP, F/TNK FIL HOSE LWR	99	F (LS1, NM2) (EXPORT)	1	10409871
22.	4-A8	3.022	STRAP, F/TNK PROTR (INCLS 38) (W/INSL)	99-02	F	2	10270429
23.		8.900	BOLT, HFT, 10X1.5X50 W/8 OD X 5 LG DOG PT, 21.5 OD, 9.8, PO 6174M (F/TNK STRP) (3.023)	99-02	F	AR	25537061
24.	4-A11	3.130	VALVE, EVAP EMIS CNSTR PURGE SOL (AC-DELCO #214-641)	99-02	F (LS1)	1	1997278
	4-A11	3.130	VALVE, EVAP EMIS CNSTR PURGE SOL (LOCATION AT INTAKE MANIFOLD) (AC-DELCO #214-646)	99-02	F (L36)	1	1997279
	4-A11	3.130	VALVE, EVAP EMIS CNSTR PURGE SOL (LOCATION NEAR ENGINE INTAKE MANIFOLD (FROM THROTTLE BODY) (AC-DELCO #214-641)	99-02	F (L36)	1	1997278
25.	4-A11	3.120	HOSE, EVAP EMIS CNSTR VENT	99-02	F	1	10409865
26.	4-A12	3.145	PIPE, EVAP EMIS CNSTR PURGE	99-02	F (LS1)	1	10409862
	4-A12	3.145	PIPE, EVAP EMIS CNSTR PURGE	99-02	F (L36)	1	10409862
27.	4-A11	3.130	CANISTER, EVAP EMIS (AC-DELCO #215-181)	99-02	F	1	17113332
28.		8.948	CLAMP, 12 WIDE, 23 NOM DIA, 1.4 THK, SAE 1075 STL, BLACK (EVAP EMIS CNSTR HOSE)	99-02		AR	25665982
29.	4-A8	3.022	INSULATOR, F/TNK	99-02	F	1	10414741
30.		8.921	NUT, U-SHAPE M10X1.5 THD POR 33 LONG (F/TNK STRP) (3.023)	99-02	F	2	22531616
31.	4-A10	3.112	GASKET, FUEL SDR (PART OF 33) (103MM ID, 113MM OD, 4MM THK)	99-02	F (LS1, L36)	1	25167743
32.	4-A9	3.107	RETAINER, FUEL SDR (CAM LOCK) (3.904) (AC-DELCO #21010287)	99-02	F	1	21010287
33.	4-A9	3.107	MODULE, F/TNK F/PMP (INCLS 31, 34-36) (AC-DELCO #MU167)	99-02	F (L36)	1	25316320
	4-D15	3.900	MODULE, F/TNK F/PMP (INCLS 31, 34-36) (3.107) (AC-DELCO #MU167)	99-02	F (L36)	1	25316320
	4-A9	3.107	MODULE, F/TNK F/PMP (W/SEAL) (INCLS 31, 34-36) (AC-DELCO #25323845)	99-02	F (LS1)	1	25323845

cardiagn.com

	4-D15	3.900	MODULE, F/TNK F/PMP (W/SEAL) (INCLS 31, 34-36) (3.107) (AC-DELCO #25323845)	99-02	F (LS1)	1	25323845
34.	4-A9	3.107	SENSOR, F/TNK PRESS (PART OF 33)	99-02	F	1	16238399
35.	4-A20	3.330	REGULATOR, FUEL PRESS (PART OF 33) (AC-DELCO #217-397)	99-02	F (L36)	1	17113346
36.	4-A10	3.110	STRAINER KIT, FUEL (PART OF 33) (AC-DELCO #TS90)	99-02	F (LS1, L36)	1	25166285
37.	4-A12	3.145	PIPE, EVAP EMIS	99-02	F	1	10409887
38.	4-A8	3.022	INSULATOR, F/TNK (LOWER) (PART OF 22)	99-02	F	1	10113030
39.		N.S.	P .E .B. CONNECTOR	99-02	.....	1	

RPO DEFINITIONS
LS1 -- ENGINE GAS, 8 CYL., 5.7L, SFI, ALUMINUM ENGINE
L36 -- ENGINE GAS, 6 CYL, 3.8K, MFI, V6, HO (ERV6 SERIES)
NM2 -- EMISSION SYSTEM EXPORT, LEADED FUEL
NM8 -- EMISSION SYSTEM,LEADED FUEL(EXPORT)

cardiagn.com

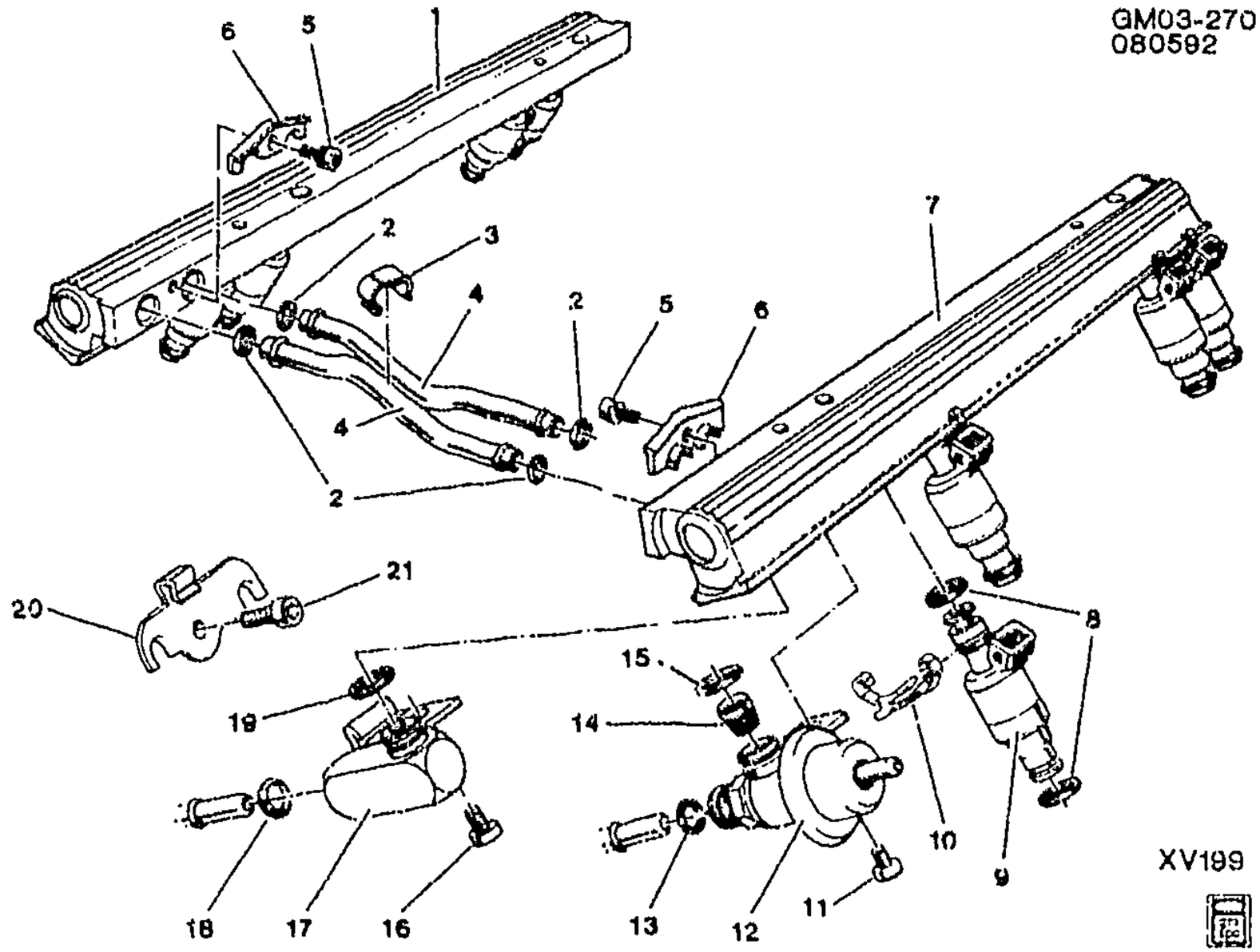

1993 F FUEL INJECTOR RAIL (MODEL R815)(LT1/5.7P)

1.	N.S.	**RAIL**, LH MFI FUEL (*KIT1)	
2.	N.S.	**O-RING**, FUEL CROSSOVER TUBE (*KIT1, KIT2, KIT3, KIT9)	
3.	N.S.	**CLIP**, FUEL CROSSOVER TUBE (*KIT5)	
4.	N.S.	**TUBE**, FUEL CROSSOVER (*KIT3)	
5.	N.S.	**SCREW**, CROSSOVER TUBE RETAINER ATTACHING (*KIT5, KIT10)	
6.	N.S.	**RETAINER**, FUEL CROSSOVER TUBE (*KIT5)	
7.	N.S.	**RAIL**, RH MFI FUEL (*KIT2)	
8.	N.S.	**O-RING**, FUEL INJECTOR (*KIT6, KIT8)	
9.	N.S.	**INJECTOR**, MFI FUEL (*KIT6)	
10.	N.S.	**CLIP**, INJECTOR RETAINER (*KIT6, KIT7)	
11.	N.S.	**SCREW**, PRESSURE REGULATOR ATTACHING (*KIT4, KIT10)	
12.	N.S.	**REGULATOR**, FUEL PRESSURE (*KIT4)	
13.	N.S.	**O-RING**, FUEL OUTLET TUBE (*KIT1, KIT2, KIT3, KIT4, KIT9)	
14.	N.S.	**SCREEN**, FILTER	

cardiagn.com

15.		N.S.	O-RING, FUEL INLET FITTING (*KIT1, KIT2, KIT3, KIT4, KIT9) ...					
16.		N.S.	SCREW, FUEL INLET ASM ATTACHING (*KIT10)					
17.		N.S.	INLET, FUEL					
18.		N.S.	O-RING, FUEL INLET TUBE (*KIT1, KIT2, KIT3, KIT9)					
19.		N.S.	O-RING, FUEL INLET ASM (*KIT1, KIT2, KIT3, KIT9)					
20.	4-A14	3.162	CLIP, F/INJN FUEL FEED & RTN PIPE	93	F (LT1)	1	10224230
21.	4-A14	3.162	BOLT, F/INJN FUEL FEED & RTN PIPE CLIP	93	F (LT1)	1	10224231

SERVICE KITS

1.		DISCON	RAIL KIT, M/PORT F/INJN FUEL (INCL 1, 2, 13, 15, 18, 19)	93	F (LT1)	LH	17112992
2.	4-A20	3.330	RAIL KIT, M/PORT F/INJN FUEL (INCL 2, 7, 13, 15, 18, 19) (AC-DELCO #17112993)	93	F (LT1)	RH	17112993
3.	4-A20	3.330	RAIL KIT, M/PORT F/INJN FUEL (CROSSOVER) (INCL 2, 4, 13, 15, 18, 19) (AC-DELCO #17112988)	93	F (LT1)	1	17112988
4.	4-A20	3.330	REGULATOR KIT, FUEL PRESS (INCL 11, 12, 13, 15) (AC-DELCO #217-370)	93	F (LT1)	1	17107491
5.	4-A20	3.330	FASTENER KIT, F/INJN FUEL RL (INCL 3, 5, 6) (AC-DELCO #17112991)	93	F (LT1)	1	17112991
6.	4-A19	3.300	INJECTOR, M/PORT FUEL (INCL 8, 9, 10) (AC-DELCO #217-272)	93	F (LT1)	8	17105094
7.	4-A22	3.332	RETAINER KIT, F/INJR (KIT CONTAINS 8 RETAINERS) (INCL 10) (AC-DELCO #17112633) ...	93	F (LT1)	1	17112633
8.	4-A21	3.331	SEAL KIT, F/INJR (O RING) (INCL 8) (BLUE;16 SEALS) (BLUE O-RING CAN BE USED TO SERVICE BLK/BRN O-RINGS) (AC-DELCO #217-1379)	93	F (LT1)	2	17113544
9.	4-A15	3.163	SEAL KIT, F/INJN FUEL FEED & RTN PIPE (INCL 2, 13, 15, 18, 19) (3.331) (AC-DELCO #217-460)	93	F (LT1)	1	17112989
10.	4-A21	3.331	BOLT KIT, F/INJN FUEL RL (INCL 5, 11, 16) (3.330) (AC-DELCO #17112990)	93	F (LT1)	1	17112990

RPO DEFINITIONS
LT1 – ENGINE-GAS, 8 CYL, 5.7L(5.7P),MFI,HO

cardiagn.com

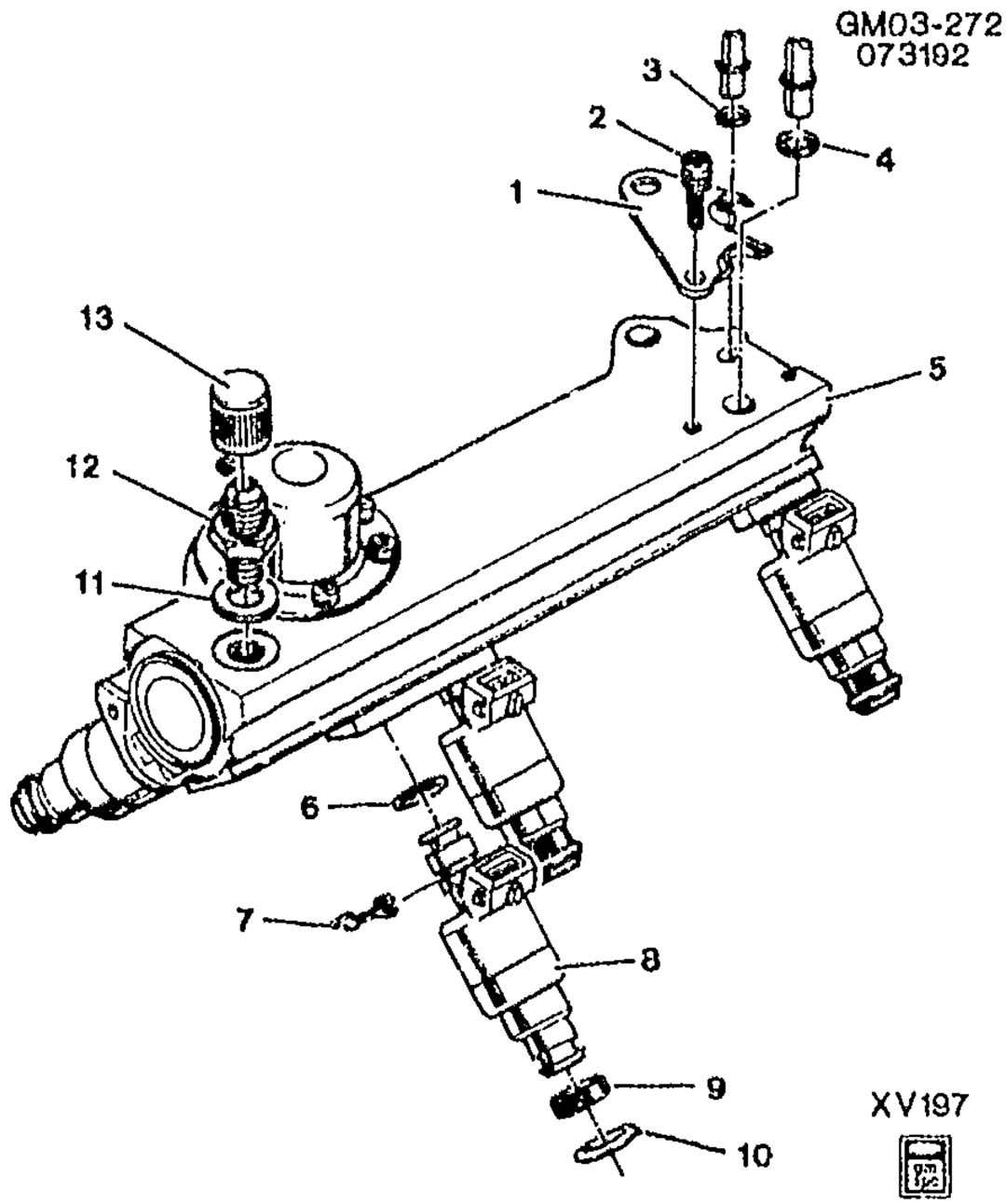

GM03-272

1993–1995 F FUEL INJECTOR RAIL (MODEL R610)(L32/3.4S)

1.	N.S.	**RETAINER**, FUEL TUBE (*KIT2)	
2.	N.S.	**SCREW**, FUEL TUBE ATTACHING (*KIT2)	
3.	N.S.	**O–RING**, FUEL INLET TUBE (*KIT1)	
4.	N.S.	**O–RING**, FUEL OUTLET TUBE (*KIT1)	
5.	N.S.	**RAIL**, FUEL (*KIT1)	
6.	N.S.	**O–RING**, UPPER INJECTOR (*KIT4, KIT5)	
7.	N.S.	**CLIP**, FUEL INJECTOR RETAINER (*KIT4, KIT6)	
8.	N.S.	**INJECTOR**, FUEL (*KIT4)	
9.	N.S.	**SEAL**, FUEL INJECTOR (*KIT4, KIT5)	
10.	N.S.	**O–RING**, LOWER INJECTOR (*KIT4, KIT5)	
11.	N.S.	**SEAL**, FUEL PRESSURE CONNECTION (*KIT3)	
12.	N.S.	**CONNECTION**, FUEL PRESSURE (*KIT3)	
13.	N.S.	**CAP**, FUEL PRESSURE CONNECTION (*KIT3)	

cardiagn.com

1.	4–A20	3.330	RAIL KIT, SEQ M/PORT F/INJN FUEL (INCL 3, 4, 5) (INCLS FUEL PRESSURE REGULATOR) (AC–DELCO #217–396)	93–95	F (L32)	1	17113227
2.	4–A14	3.162	NUT KIT, F/INJN FUEL FEED & RTN (INCL 1, 2) (3.330)	93–95	F (L32)	1	17112980
3.	4–A20	3.330	VALVE KIT, FUEL PRESS SERV (INCL 11, 12, 13) (AC–DELCO #217–388)	93–95	F (L32)	1	17112759
4.	4–A19	3.300	INJECTOR KIT, SEQ M/PORT FUEL (INCL 6, 7, 8, 9, 10) (AC–DELCO #217–301)	93–95	F (L32)	6	17113175
5.	4–A21	3.331	SEAL KIT, F/INJR (O RING) (INCL 6, 9, 10) (BLUE;16 SEALS) (BLUE O–RING CAN BE USED TO SERVICE BLK/BRN O–RINGS) (AC–DELCO #217–1379)	93–95	F (L32)	1	17113544
6.	4–A22	3.332	RETAINER KIT, F/INJR (QTY 5) (INCL 7) (CONTAINS 5 PCS) (AC–DELCO #17111267)	93–95	F (L32)	1	17111267

RPO DEFINITIONS
L32 – ENGINE,3.4L,V6,(3.4S),SFI,OHV

cardiagn.com

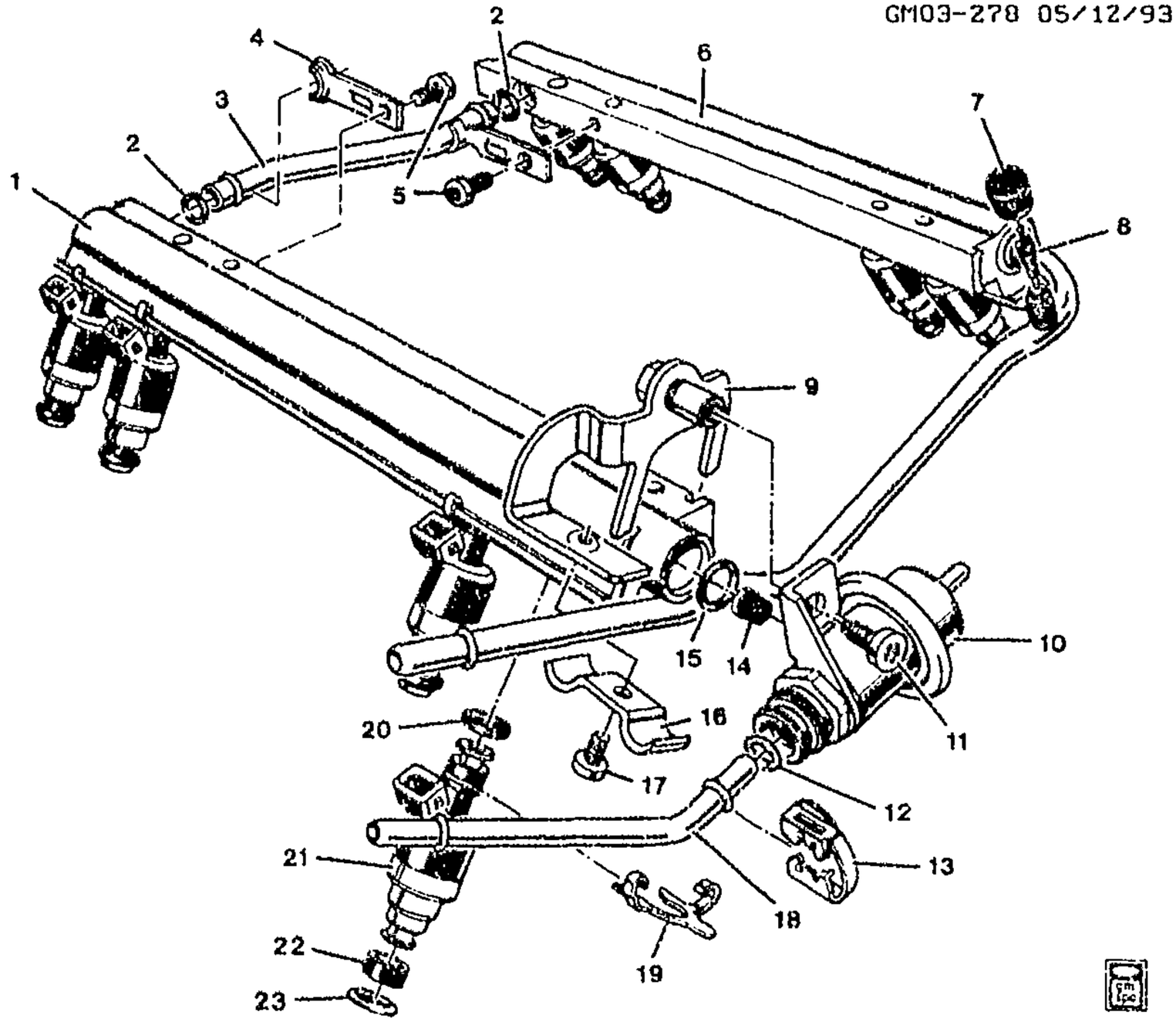

GM03-278F

1994-1997 F FUEL INJECTOR RAIL MPFI (MODEL R816)(5.7P)(LT1)

1.	N.S.	RAIL, FUEL (LEFT SIDE) (*KIT2)	
2.	N.S.	SEAL, O-RING CROSSOVER TUBE (*KIT8)	
3.	N.S.	TUBE, FUEL CROSSOVER (*KIT9)	
4.	N.S.	RETAINER, CROSSOVERTUBE (*KIT9)	
5.	N.S.	SCREW, CROSSOVER TUBE RETAINER ATTACHING (*KIT9)	
6.	N.S.	RAIL, FUEL (RIGHT SIDE) (*KIT1)	
7.	N.S.	CAP, FUEL PRESSURE CONNECTION (*KIT5)	
8.	N.S.	VALVE, FUEL PRESSURE CONNECTION (*KIT5)	
9.	N.S.	RETAINER, W/SPACER, REGULATOR (*KIT10)	
10.	N.S.	REGULATOR, FUEL PRESSURE (*KIT3)	
11.	N.S.	SCREW, PRESSURE REGULATOR ATTACHING (*KIT10)	

cardiagn.com

12.		N.S.	**SEAL**, O-RING FUEL OUTLET TUBE (*KIT8)					
13.		N.S.	**CLIP**, FUEL OUTLET TUBERETAINER (*KIT10)					
14.		N.S.	**SCREEN**, FILTER (NO LONGER REQUIRED FOR SERVICE					
15.		N.S.	**SEAL**, FUEL INLET FITTING (*KIT3, KIT8)					
16.		N.S.	**RETAINER**, FUEL TUBE (*KIT10)					
17.		N.S.	**SCREW**, FUEL TUBE RETAINER ATTACHING (*KIT10)					
18.		N.S.	**TUBE**, FUEL OUTLET (*KIT10)					
19.		N.S.	**CLIP**, INJECTOR RETAINER (*KIT4, KIT7)					
20.		N.S.	**SEAL**, O-RING UPPER INJECTOR (BLACK) (*KIT6)					
21.		N.S.	**INJECTOR**, FUEL (*KIT4)					
22.		N.S.	**SEAL**, BACKUP (O-RING) (*KIT6)					
23.		N.S.	**SEAL**, O-RING LOWER INJECTOR (BROWN USED IN PRODUCTION) (FOR SERVICE USE BROWN OR BLACK) (*KIT6)					

SERVICE KITS

1.	4-A20	3.330	**RAIL KIT**, M/PORT F/INJN FUEL (RIGHT SIDE) (INCL # 6)	94-97	F (LT1)	RH	17113251
2.	4-A20	3.330	**RAIL KIT**, M/PORT F/INJN FUEL (LEFT SIDE) (INCL # 1)	94-97	F (LT1)	LH	17113249
3.	4-A20	3.330	**REGULATOR KIT**, FUEL PRESS (INCL # 10, 15) (AC-DELCO #217--363)	94-95	F (LT1)	1	17091221
	4-A20	3.330	**REGULATOR**, FUEL PRESS (INCL # 10, 15) (AC-DELCO #217-365)	96-97	F (LT1)	1	17091947
4.	4-A19	3.300	**INJECTOR**, M/PORT FUEL (INCL # 19, 21) (AC-DELCO #217-313)	94-97	F (LT1)	8	17124248
5.	4-A20	3.330	**VALVE KIT**, FUEL PRESS SERV (INCL # 7, 8) (AC-DELCO #217-384)	94-97	F (LT1)	1	17112556
6.	4-A21	3.331	**SEAL KIT**, F/INJR (O RING) (INCL # 20, 22, 23) (BLUE;16 SEALS) (BLUE O-RING CAN BE USED TO SERVICE BLK/BRN O-RINGS) (AC-DELCO #217-1379)	94-97	F (LT1)	1	17113544
7.	4-A22	3.332	**RETAINER KIT**, F/INJR (INCL # 19) (AC-DELCO #17112633)	94-97	F (LT1)	1	17112633
8.	4-A21	3.331	**SEAL KIT**, F/INJN FUEL RL (FUEL RAIL) (INCL # 2, 12, 15) (AC-DELCO #217-449)	94--97	F (LT1)	1	17113086
9.	4-A20	3.330	**TUBE**, F/INJN FUEL RL C/OVR (INCL # 3, 4, 5)	94-97	F (LT1)	1	17113092
10.	4-A15	3.163	**PIPE KIT**, F/INJN FUEL RTN (INCL # 9, 11, 13, 16, 17, 18)	94-97	F (LT1)	1	17113095

cardiagn.com

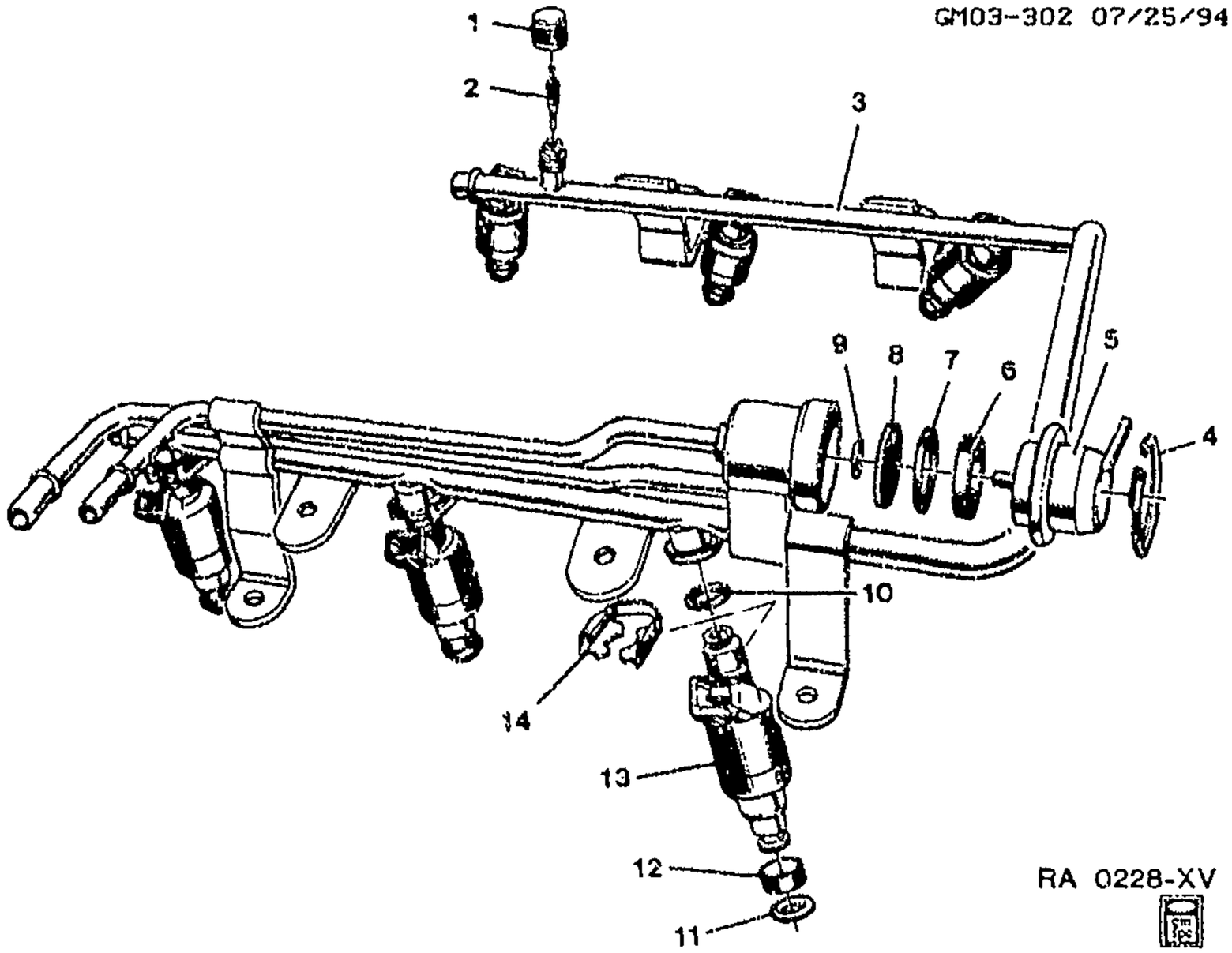

GM03--302F

1995--2002 F FUEL INJECTOR RAIL MPFI (MODEL 655)(L36/3.8K)

1.	N.S.	**CAP**, FUEL PRESSURE CONNECTION (*KIT1, KIT3)	.....
2.	N.S.	**VALVE CORE**, FUEL PRESSURE CONNECTION (*KIT1, KIT3)	.....
3.	N.S.	**RAIL ASM**, FUEL (*KIT1)	....
4.	N.S.	**CLIP**, REGULAR RETAINER (*KIT7)	.....
5.	N.S.	**REGULATOR ASM**, FUEL PRESSURE (*KIT2)	.....
6.	N.S.	**SEAL** REGULATOR SEAL O-R'NG (*KIT2)	.....
7.	N.S.	**SEAL**, REGULATOR SEAL FILTER (O-RING) (*KIT2)	....
8.	N.S.	**FILTER**, REGULATOR (*KIT2) ...	.....
9.	N.S.	**SEAL**, REGULATOR (O-RING) (*KIT2)	.....
10.	N.S.	**SEAL**, MPI FUEL INJECTOR UPPER (O-RING) (*KIT4, KIT5) ..	.....
11.	N.S.	**SEAL**, MPI FUEL INJECTOR LOWER (O--RING) (*KIT4, KIT5) .	....
12.	N.S.	**RING**, BACK-UP (*KIT4, KIT5) ..	.....
13.	N.S.	**INJECTOR**, MPI FUEL (*KIT4) ...	.....
14.	N.S.	**CLIP**, MPI FUEL INJECTOT RETAINER (*KIT4, KIT6)	... .

cardiagn.com

1.	4–A20	3.330	RAIL KIT, M/PORT F/INJN FUEL (INCL #1, 2, 3) (AC–DELCO #17113194)	95–99	F (L36)	1	17113194
	4–A20	3.330	RAIL KIT, M/PORT F/INJN FUEL (INCL #1, 2, 3) (AC–DELCO #17113624)	00–02	F (L36)	1	17113624
2.	4–A20	3.330	REGULATOR, FUEL PRESS (INCL #5, 6, 7, 8, 9) (AC–DELCO #217–397)	95–97	F (L36, M30)	1	17113346
	4–A20	3.330	REGULATOR, FUEL PRESS (INCL #5, 6, 7, 8, 9) (AC–DELCO #217–397)	96–97	F (L36, M49)	1	17113346
	4–A20	3.330	REGULATOR, FUEL PRESS (INCL #5, 6, 7, 8, 9) (AC–DELCO #217–397)	98–02	F (L36)	1	17113346
3.	4–A20	3.330	VALVE KIT, FUEL PRESS SERV (INCL #1, 2) (AC–DELCO #217–384)	95–02	F (L36)	1	17112556
4.	4–A19	3.300	INJECTOR, M/PORT FUEL (INCL #10, 11, 12, 13, 14) (AC–DELCO #217–306)	95–99	F (L36)	6	17120601
	4–A19	3.300	INJECTOR, M/PORT FUEL (INCL #10, 11, 12, 13, 14) (AC–DELCO #217–1436)	00–02	F (L36)	1	25323972
5.	4–A21	3.331	SEAL KIT, F/INJR (O RING) (INCL #10, 11, 12) (BLUE;16 SEALS) (BLUE O–RING CAN BE USED TO SERVICE BLK/BRN O–RINGS) (AC–DELCO #217–1379)	95–99	F (L36)	1	17113544
	4–A20	3.304	SEAL KIT, M/PORT F/INJR (INCL #10, 11, 12) (3.330) (AC–DELCO #217–1427)	00–01	F (L36)	1	17113400
	4–A20	3.304	SEAL KIT, M/PORT F/INJR (INCL #10, 11, 12) (3.330) (AC–DELCO #217–1427)	02	F (L36)	1	17113400
6.	4–A22	3.332	RETAINER KIT, F/INJR (INCL #14) (AC–DELCO #17113401)	00–02	F (L36)	1	17113401
	4–A22	3.332	RETAINER KIT, F/INJR (FUEL RL) (INCL #14) (AC–DELCO #17111800)	95–99	F (L36)	6	17111800
7.	4–A20	3.330	RETAINER, FUEL PRESS REG (INCL #4)	95–97	F (L36, M30)	1	17120213
	4–A20	3.330	RETAINER, FUEL PRESS REG (INCL #4)	96–97	F (L36, M49)	1	17120213

RPO DEFINITIONS

L36 – ENGINE GAS, 6 CYL, 3.8K, MFI, V6, HO (ERV6 SERIES)
M30 – TRANSMISSION,AUTOMATIC 4 SPEED,4L60E,ELECTRONIC
M49 – TRANSMISSION MAN 5 SPD, BORG WARNER, 77MM, 3.75 1ST, .76 5TH, O/D

cardiagn.com

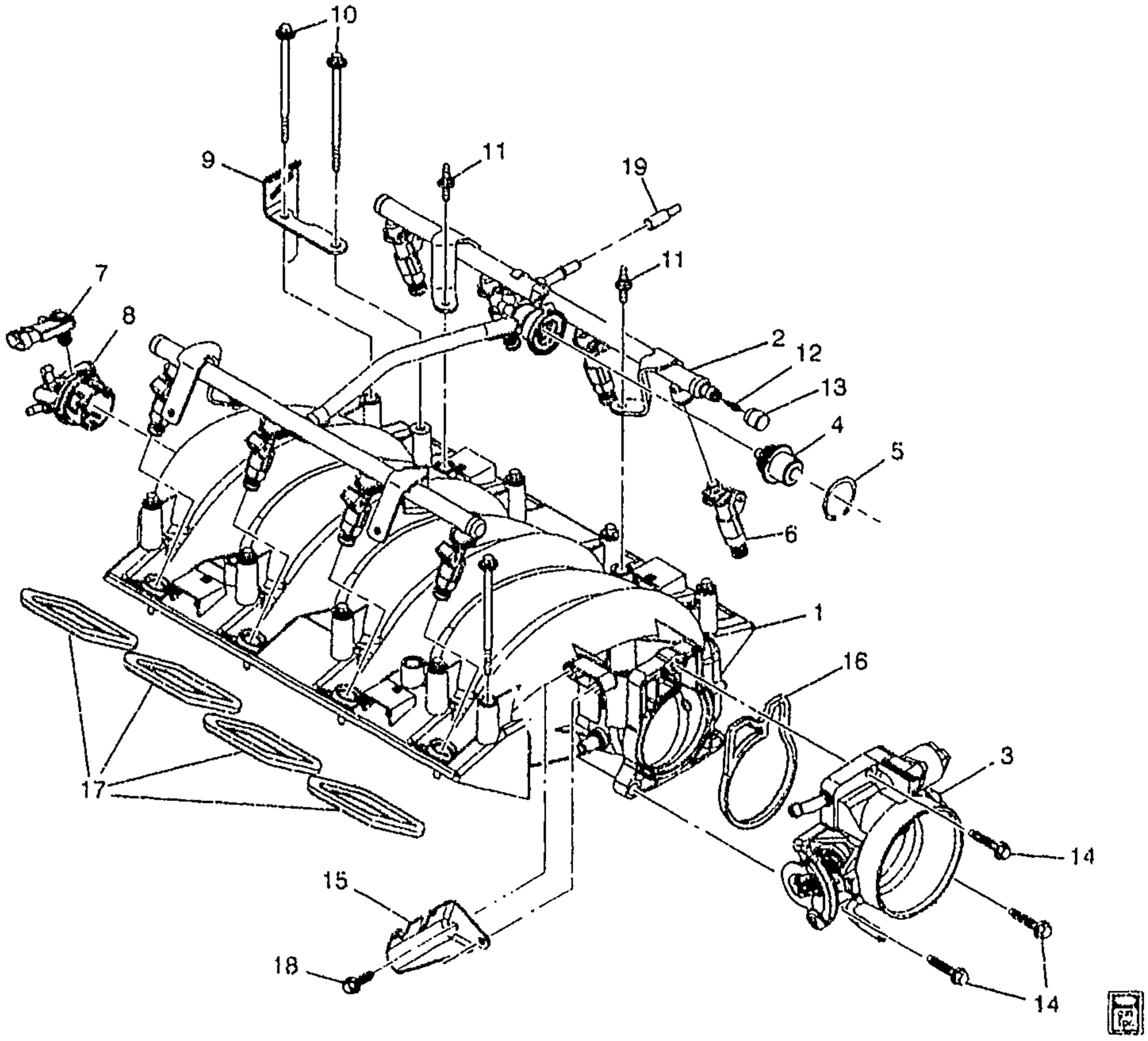

GM03-324

1998-2002 F FUEL INJECTOR RAIL SFI (LS1/5.7G)

1.	4-A16	3.265	MANIFOLD, INT (SERV) (INCL 8)	98-00	F (LS1)	1	12561269
	4-A16	3.265	MANIFOLD, INT (SERV) (INCLS MANIF, SEALS, GASKET, PLUG, SENSOR) (INCL 8)	01-02	F (LS1)	1	88890523
2.	4-A20	3.330	RAIL, SEQ M/PORT F/INJN FUEL (AC-DELCO #217-1401)	98-02	F (LS1)	1	12562815
3.	4-A22	3.335	BODY, THROT (SEE GROUP 3.000 "THROTTLE BODY"FOR DETAIL ILLUSTRATED VIEW.) (AC-DELCO #17113390)	98-99	F (LS1)	1	17113390
	4-A22	3.335	BODY, THROT (SEE GROUP 3.000 "THROTTLE BODY"FOR DETAIL ILLUSTRATED VIEW.) (AC-DELCO #17113647)	00-02	F (LS1)	1	17113647
4.	4-A9	3.107	DAMPENER, FUEL PULSE	98-02	F (LS1)	1	12555909

cardiagn.com

5.	4–A20	3.330	RING, FUEL PRESS REG RET ...	98–02	F (LS1)	1	24500246
6.	4–A19	3.300	INJECTOR KIT, SEQ M/PORT FUEL (AC–DELCO #12533952) .	98	F (LS1)	8	12533952
	4–A19	3.300	INJECTOR KIT, M/PORT FUEL (AC–DELCO #12456154)	99	F (LS1)	8	12456154
	4–A19	3.300	INJECTOR KIT, M/PORT FUEL (AC–DELCO #12456154)	00	F (LS1)	8	12456154
	4–A19	3.300	INJECTOR KIT, SEQ M/PORT FUEL	01	F (LS1)	8	12482704
	4–A19	3.300	INJECTOR KIT, SEQ M/PORT FUEL	02	F (LS1)	8	12482704
7.	4–C26	3.682	SENSOR, MAP (W/SEAL) (AC–DELCO #213–331)	98–02	F (LS1)	1	16212460
	4–C26	3.682	CONNECTOR, SEN–MAP (GRAY) (3–WAY F)	98–02	F (LS1)	1	12129946
8.		N.S.	PLUG, MAP SEN HOLE (PART OF 1)		.....		
9.	4–A20	3.330	BRACKET, F/INJN FUEL RL	98–02	F (LS1)	LH	12556074
10.	4–A17	3.275	BOLT, INT MANIF (W/FLAT WASHER) (M6X1.0X21.8, 13.6 OD, GM500M, ZF, MACH, ADHES)	98–02	F (LS1)	10	12552344
11.	4–A20	3.330	STUD, F/INJN FUEL RL (HFH 6X1X18.5X14 W/ADH, 6X1X14, 39.1 OAL, 14.2 OD, 9.8, 7114M) (AC–DELCO #12554211)	98–01	F (LS1)	4	12554211
	4–A20	3.330	STUD, F/INJN FUEL RL (HFH 6X1X18.5X14 W/ADH, 6X1X14, 39.1 OAL, 14.2 OD, 9.8, 7114M) (AC–DELCO #12554211)	02	F (LS1)	4	12554211
12.	4–A20	3.330	VALVE, FUEL PRESS SERV (3.302)	98–02	F (LS1)	1	25532663
13.	4–A20	3.330	CAP, FUEL PRESS SERV VLV (3.163) (AC–DELCO #214–1044)	98–02	F (LS1)	1	25532662
14.		8.900	BOLT, METRIC HEX FLG HD (M6X1X30) (POR 9.8) (THROT BODY)	98–02	.....	3	11514008
15.	4–B3	3.454	BRACKET, ACCEL CONT CBL ...	98–02	F (LS1)	1	12552278
16.	4–A23	3.336	SEAL, THROT BODY	98–02	F (LS1)	1	12552542
17.	4–A17	3.270	GASKET KIT, INT MANIF (CONTAINS 8 GASKETS)	98–02	F (LS1)	1	12533587
18.		8.900	BOLT, M6X1X16, 13.5 THD, 14.2 OD, 9.8, SN–ZN (ACCEL CONT CBL CBL BRKT)	98–02	.....	2	11517517
19.		N.S.	CAP, OUTLET (PROTECTIVE)		.....		

RPO DEFINITIONS

LS1 – ENGINE GAS, 8 CYL, 5.7L, SFI, ALUMINUM ENGINE

cardiagn.com

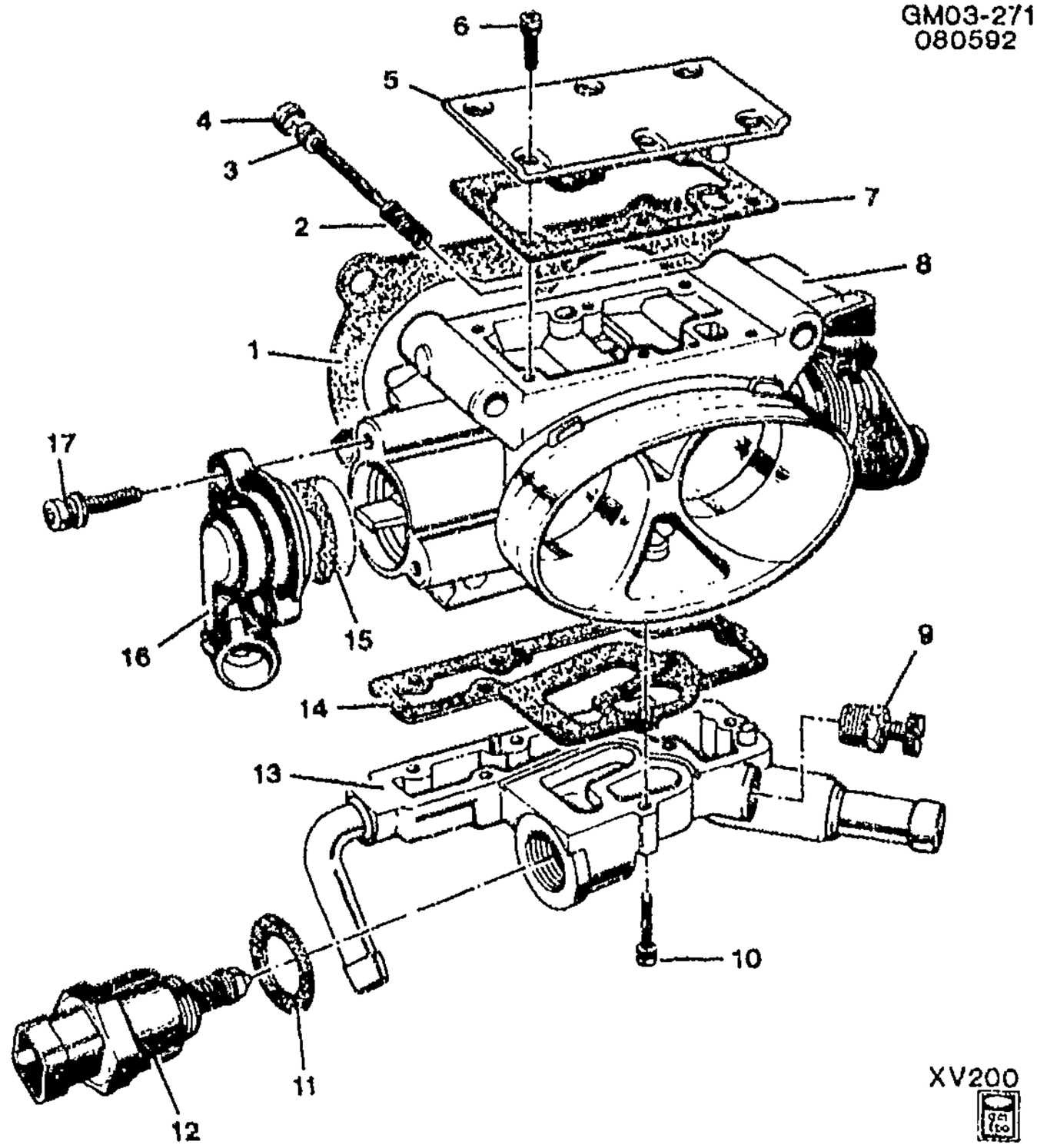

GM03-271

1993 F THROTTLE BODY (MODEL B210)(LT1/5.7P)

1.	4-A23	3.336	GASKET, THROT BODY (*KIT1, KIT2, KIT3, KIT4) (AC-DELCO #40-718)	93 F (LT1)	1	10105379
2.		N.S.	SPRING, IDLE STOP SCREW (*KIT1)			
3.		N.S.	SCREW, IDLE STOP (*KIT1)			
4.		N.S.	PLUG, IDLE STOP SCREW (*KIT1)			
5.		N.S.	COVER, CLEAN AIR (*KIT1, KIT3)			
6.		N.S.	SCREW, CLEAN AIR COVER ATCH (*KIT1, KIT5)			
7.		N.S.	GASKET, CLEAN AIR COVER (*KIT1, KIT2, KIT3, KIT4)			
8.		N.S.	THROTTLE BODY ASM (*KIT1)			
9.	4-A24	3.338	VALVE, INT MANIF RUNNER CONT (*KIT1, KIT4) (AC-DELCO #17101908)	93 F (LT1)	1	17101908

cardiagn.com

10.	N.S.	**SCREW**, IACV COVER ASM TO THROT BODY (*KIT1, KIT5)	.....
11.	N.S.	**GASKET**, IACV (*KIT1, KIT2, KIT3, KIT4, KIT7)	.....
12.	N.S.	**VALVE**, IDLE AIR CONT (IACV) (*KIT1, KIT7)	.....
13.	N.S.	**COVER**, IACV/COOLANT (*KIT1, KIT4)	.....
14.	N.S.	**GASKET**, IACV/COOLANT COVER TO THROT BODY (*KIT1, KIT2, KIT3, KIT4)	.....
15.	N.S.	**SEAL**, STATIC (*KIT1)	.....
16.	N.S.	**SENSOR**, THROTTLE POSITION (TPS) (*KIT1, KIT6)	.....
17.	N.S.	**SCREW**, TPS ATCH (*KIT1, KIT5, KIT6)	.....

SERVICE KITS

1.	4–A22	3.335	**BODY**, THROT (INCL 1–17) (AC–DELCO #17093107)	93	F (LT1)	1	17093107
2.	4–A23	3.336	**GASKET KIT**, THROT BODY (INCL 1, 7, 11, 14) (AC–DELCO #40–742)	93	F (LT1)	1	17112833
3.	4–A24	3.337	**COVER KIT**, THROT BODY (INCL 1, 5, 7, 11, 14) (AC–DELCO #17112831)	93	F (LT1)	1	17112831
4.		DISCON	**HOUSING KIT**, IDLE AIR C/VLV (W/GSKT) (INCL 1, 7, 9, 11, 13, 14) (3.337)	93	F (LT1)	1	17113012
5.	4–A23	3.336	**BOLT/SCREW KIT**, IDLE AIR C/VLV & THROT POSN SEN (INCL 6, 10, 17) (AC–DELCO #17112832)	93	F (LT1)	1	17112832
6.	4–A25	3.339	**SENSOR KIT**, THROT POSN (INCL 16, 17) (AC–DELCO #213–896)	93	F (LT1)	1	17106682
7.	4–D10	3.820	**VALVE KIT**, IDLE AIR CONT (THROT BODY) (INCL 11, 12) (3 338) (AC–DELCO #217–415)	93	F (LT1)	1	17112193

RPO DEFINITIONS
LT1 – ENGINE–GAS, 8 CYL, 5.7L(5.7P),MFI,HO

cardiagn.com

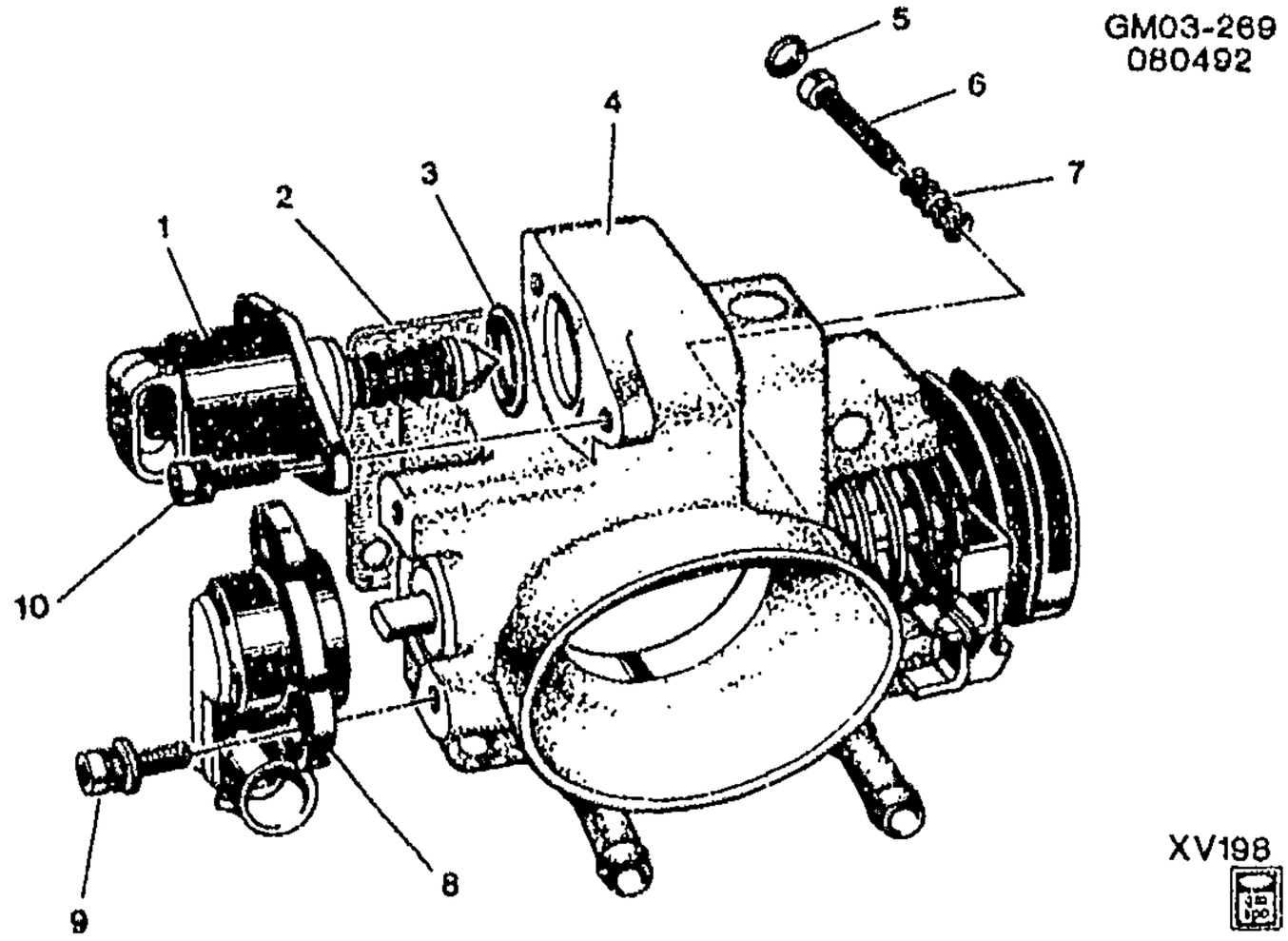

1993–1995 F THROTTLE BODY (MODEL B112) (L32/3.4S)

1.		N.S.	**VALVE**, IDLE AIR CONTROL (IAC) (*KIT2)				
2.	4–A23	3.336	**GASKET**, THROT BODY (3.726) (AC–DELCO #40–749)	93–95	F (L32)	1	24504016
3.	4–A23	3.336	**SEAL**, IDLE AIR C/VLV (O RING) (AC–DELCO #217–1428)	93–95	F (L32)	1	17082049
4.		N.S.	**BODY**, THROTTLE (*KIT1)				
5.		N.S.	**PLUG**, IDLE STOP SCREW (*KIT1)				
6.		N.S.	**SCREW**, IDLE STOP (*KIT1)				
7.		N.S.	**SPRING**, IDLE STOP SCREW (*KIT1)				
8.	4–A25	3.339	**SENSOR KIT**, TBI THROT POSN (W/O SEAL) (3.764) (AC–DELCO #21?–895)	93–95	F (L32)	1	17106681
9.		N.S.	**SCREW**, TP SENSOR ATTACHING (*KIT3)				
10.		N.S.	**SCREW**, IAC VALVE ATTACHING (*KIT3)				

SERVICE KITS

1.	4–A22	3.335	**BODY**, THROT (INCL 4, 5, 6, 7)	93–95	F (L32, M30)	1	17094150
2.	4–D10	3.820	**VALVE KIT**, IDLE AIR CONT (THROT BODY) (INCL 1) (W/SEAL) (3.338) (AC–DELCO #217–419)	93–95	F (L32)	1	17112350
3.	4–A24	3.338	**BOLT/SCREW KIT**, IDLE AIR C/VLV & THROT POSN SEN (INCL 9, 10) (3.724) (AC–DELCO #17112689)	93–95	F (L32)	1	17112689

cardiagn.com

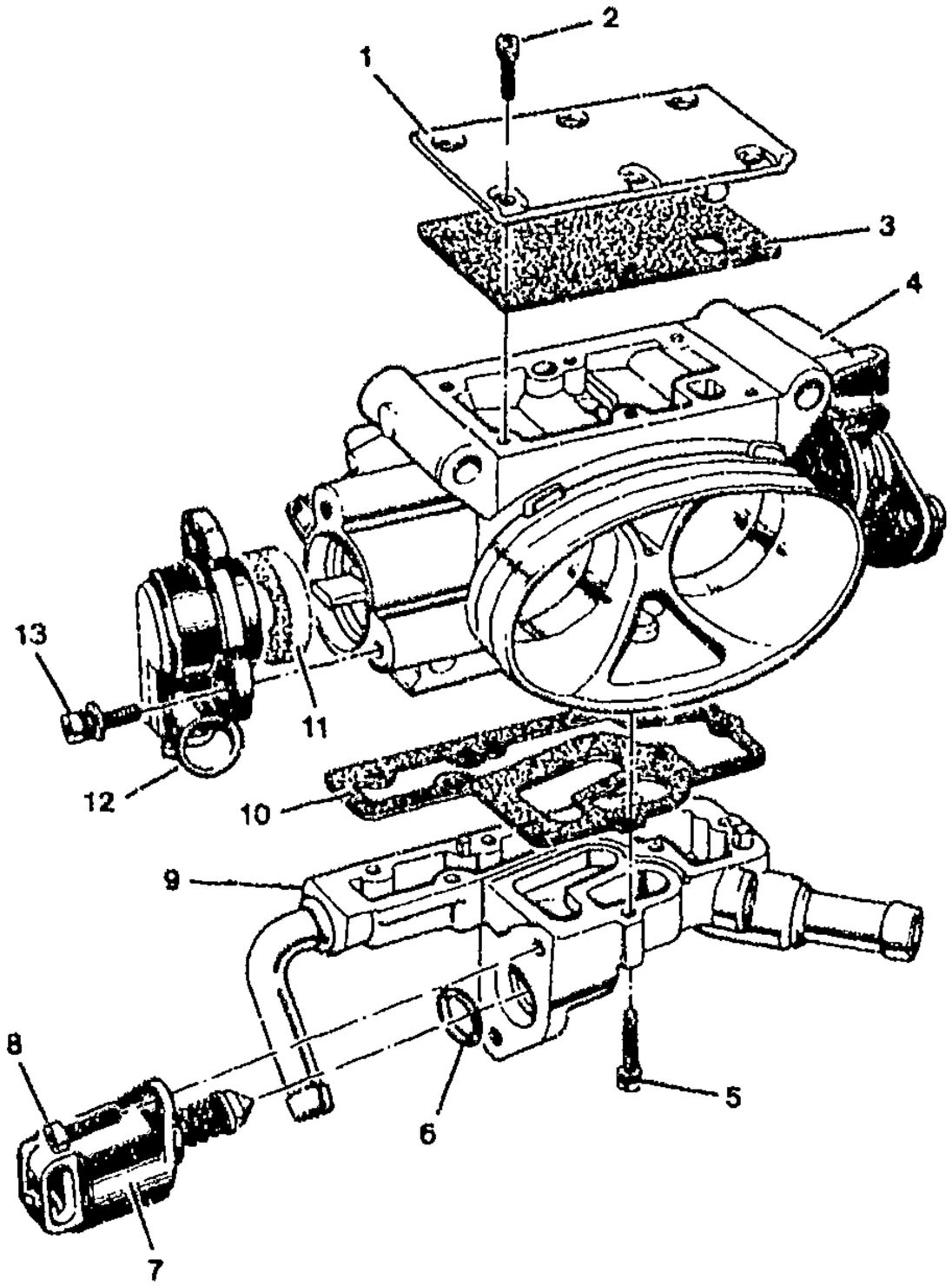

GM03-277

1994-1997 F THROTTLE BODY (MODEL B210)(LT1/5.7P)

1.	N.S.	**COVER**, CLEAN AIR (*KIT1, KIT3)	
2.	N.S.	**SCREW**, CLEAN AIRCOVER ATTACHING (*KIT1, KIT5)	
3.	N.S.	**GASKET**, CLEAN AIR COVER (*KIT1, KIT2, KIT3)	
4.	N.S.	**THROTTLE**, BODY (*KIT1)	
5.	N.S.	**SCREW**, IACV/COOLANT COVER ATTACHING (*KIT1, KIT5)	
6.	N.S.	**SEAL**, O RING IAC VALVE ASM (*KIT1, KIT7)	
7.	N.S.	**VALVE**, IDLE AIR CONTROL (IAC) (*KIT1, KIT7)	
8.	N.S.	**SCREW**, IAC VALVE ATTACHING (*KIT1, KIT5)	
9.	N.S.	**COVER**, IACV/COOLANT (*KIT1, KIT4)	

cardiagn.com

10.		N.S.	GASKET, IACV/COOLANT COVER TO THROTTLE BODY (*KIT1, KIT4)				
11.		N.S.	SEAL, STATIC (*KIT1)				
12.		N.S.	SENSOR, THROTTLE POSITION (TP) (*KIT1, KIT6)				
13.		N.S.	SCREW, TP SENSOR ATTACHING (*KIT1, KIT5)				

SERVICE KITS

1.	4–A22	3.335	BODY, THROT (INCL #1–13) (AC–DELCO #17094163)	94	F (LT1)	1	17094163
	4–A22	3.335	BODY, THROT (INCL #1–13) (AC–DELCO #17095236)	95–97	F (LT1)	1	17095236
2.	4–A23	3.336	GASKET KIT, THROT BODY (INCL #3) (AC–DELCO #40–743)	94–97	F (LT1)	1	17113074
3.	4–A24	3.337	COVER KIT, THROT BODY (INCL #1, 3) (AC–DELCO #17112831)	94–97	F (LT1)	1	17112831
4.	4–A24	3.338	HOUSING KIT, IDLE AIR C/VLV (W/GSKT) (INCL #9, 10) (AC–DELCO #17113121)	94	F (LT1)	1	17113121
	4–A24	3.338	HOUSING KIT, IDLE AIR C/VLV (W/GSKT) (INCL #9, 10) (AC–DELCO #17113097)	95	F (LT1, KC4)	1	17113097
	4–A24	3.338	HOUSING KIT, IDLE AIR C/VLV (W/GSKT) (INCL #9, 10) (AC–DELCO #17113187)	95–97	F (LT1)	1	17113187
5.	4–A23	3.336	BOLT/SCREW KIT, IDLE AIR C/VLV & THROT POSN SEN (INCL #2, 5, 8, 13) (AC–DELCO #17113098)	94–97	F (LT1)	1	17113098
6.	4–A25	3.339	SENSOR, THROT BODY THROT POSN (INCL #12) (AC–DELCO #213–894)	94–97	F (LT1)	1	17106680
7.	4–D10	3.820	VALVE KIT, IDLE AIR CONT (THROT BODY) (INCL #6, 7) (3.338) (AC–DELCO #217–429)	94	F (LT1)	1	17113099
	4–D10	3.820	VALVE KIT, IDLE AIR CONT (THROT BODY) (INCL #6 7) (3.338) (AC–DELCO #217–429)	95	F (LT1, KC4)	1	17113099
	4–D10	3.820	VALVE KIT, IDLE AIR CONT (THROT BODY) (INCL #6, 7) (3.338) (AC–DELCO #217–433)	95	F (LT1) (EXC KC4)	1	17113188
	4–D10	3.820	VALVE KIT, IDLE AIR CONT (THROT BODY) (INCL #6, 7) (3.338) (AC–DELCO #217–433)	96–97	F (LT1)	1	17113188

RPO DEFINITIONS
KC4 – COOLING SYSTEM,ENGINE OIL
LT1 – ENGINE–GAS, 8 CYL, 5.7L(5.7P),MFI,HO

cardiagn.com

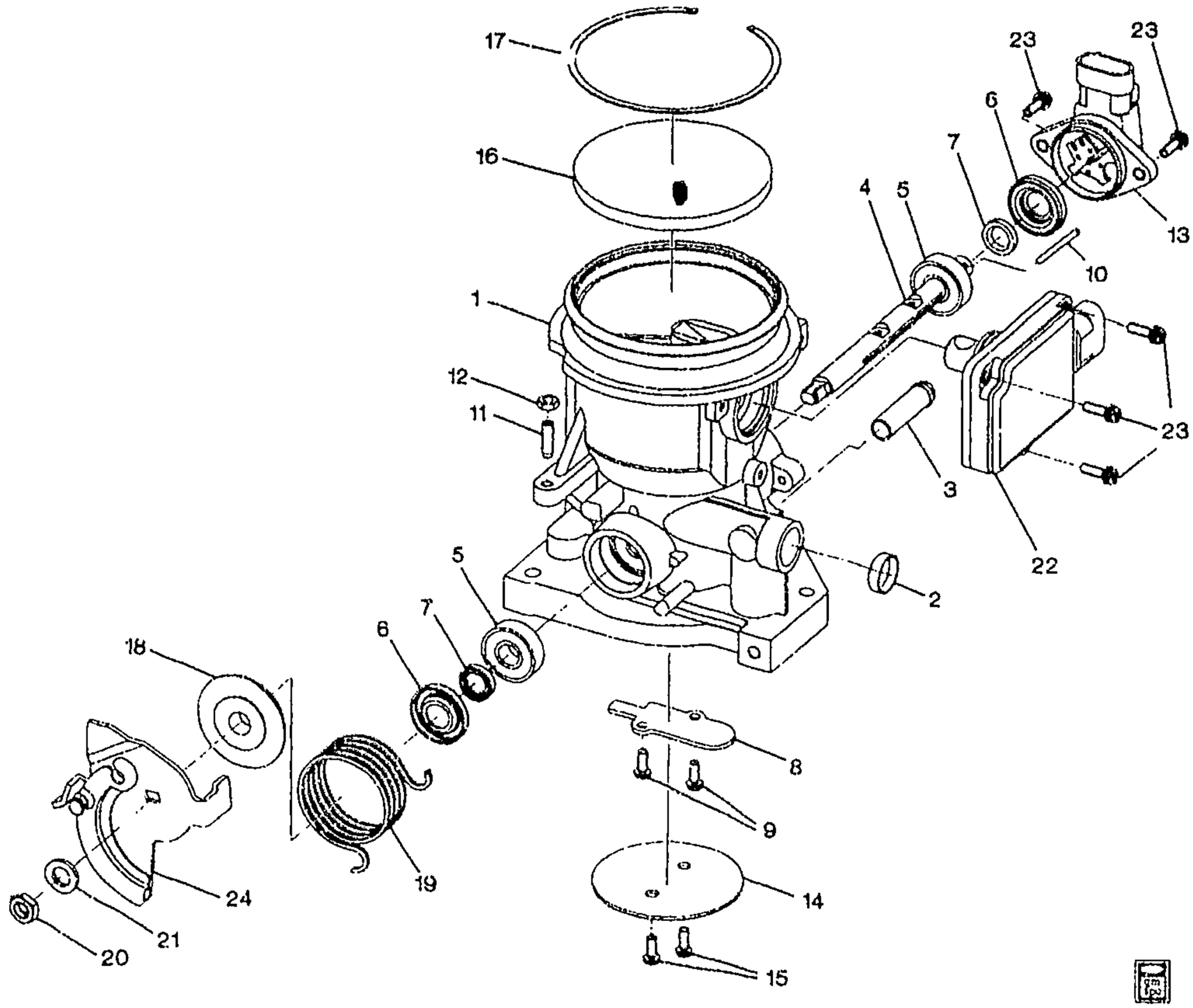

GM03-298F

1995 F THROTTLE BODY/MPFI V6 (MODEL RHA57-4B)(L36/3.8K)

1.	N.S.	THROTTLE, BODY (*KIT1)	
2.	N.S.	PLUG, IDLE AIR (*KIT1)	
3.	N.S.	PLUG, VACUUM (*KIT1)	
4.	N.S.	SHAFT, THROTTLE (*KIT1)	
5.	N.S.	BEARING, BALL (*KIT1)	
6.	N.S.	SEAL, RING (*KIT1)	
7.	N.S.	SEAL, DUST (*KIT1)	
8.	N.S.	PLATE, BACK (*KIT1)	
9.	N.S.	SCREW, BACK PLATE (*KIT1)	
10.	N.S.	PIN, TPS DRIVE (*KIT1)	
11.	N.S.	SCREW, ADJUST (IDLE) (*KIT1)	
12.	N.S.	NUT, (M5) (*KIT1)	

cardiagn.com

13.	4-A25	3.339	**SENSOR**, THROT BODY THROT POSN (*KIT1) (AC-DELCO #213-916)	95	F (L36, M30)	1	24504798
14.		N.S.	**VALVE**, THROTTLE (*KIT1)				
15.		N.S.	**SCREW**, (THROTTLEVALVE) (*KIT1)				
16.	4-A24	3.337	**SCREEN**, THROT BODY AIR INL (*KIT1) (AC-DELCO #217-1425)	95	F (L36)	1	24503677
17.	4-A22	3.335	**RING**, THROT BODY AIR INL SCRN RET (*KIT1)	95	F (L36)	1	24503676
18.		N.S.	**SLEEVE**, (SPRING) (*KIT1)				
19.		N.S.	**SPRING**, LEVER (*KIT1)				
20.		N.S.	**NUT**, LEVER (*KIT1)				
21.		N.S.	**WASHER**, SPRING LEVER (*KIT1)				
22.	4-C26	3.682	**SENSOR**, MASS AIRFLOW (*KIT1) (AC-DELCO #213-278)	95	F (L36, M30)	1	24504302
23.		N.S.	**SCREW**, MASS AIR FLOW SENSOR (AFS, TPS) (*KIT1, KIT2)				
24.		N.S.	**LEVER**, THROTTLE SHAFT (*KIT1)				

SERVICE KITS

1.	4-A22	3.335	**BODY**, THROT (INCL ITEMS #1 THRU 24)) (AC-DELCO #24503386)	95	F (L36, M30)	1	24503386
2.	4-A23	3.336	**BOLT/SCREW KIT**, IDLE AIR C/VLV & THROT POSN SEN (SCREWS & CLIPS) (INCL ITEMS #23) (AC-DELCO #217-1407)	95	F (L36, M30)	1	12537403

RPO DEFINITIONS

L36 – ENGINE GAS, 6 CYL, 3.8K, MFI, V6, HO (ERV6 SERIES)
M30 – TRANSMISSION,AUTOMATIC 4 SPEED,4L60E,ELECTRONIC

cardiagn.com

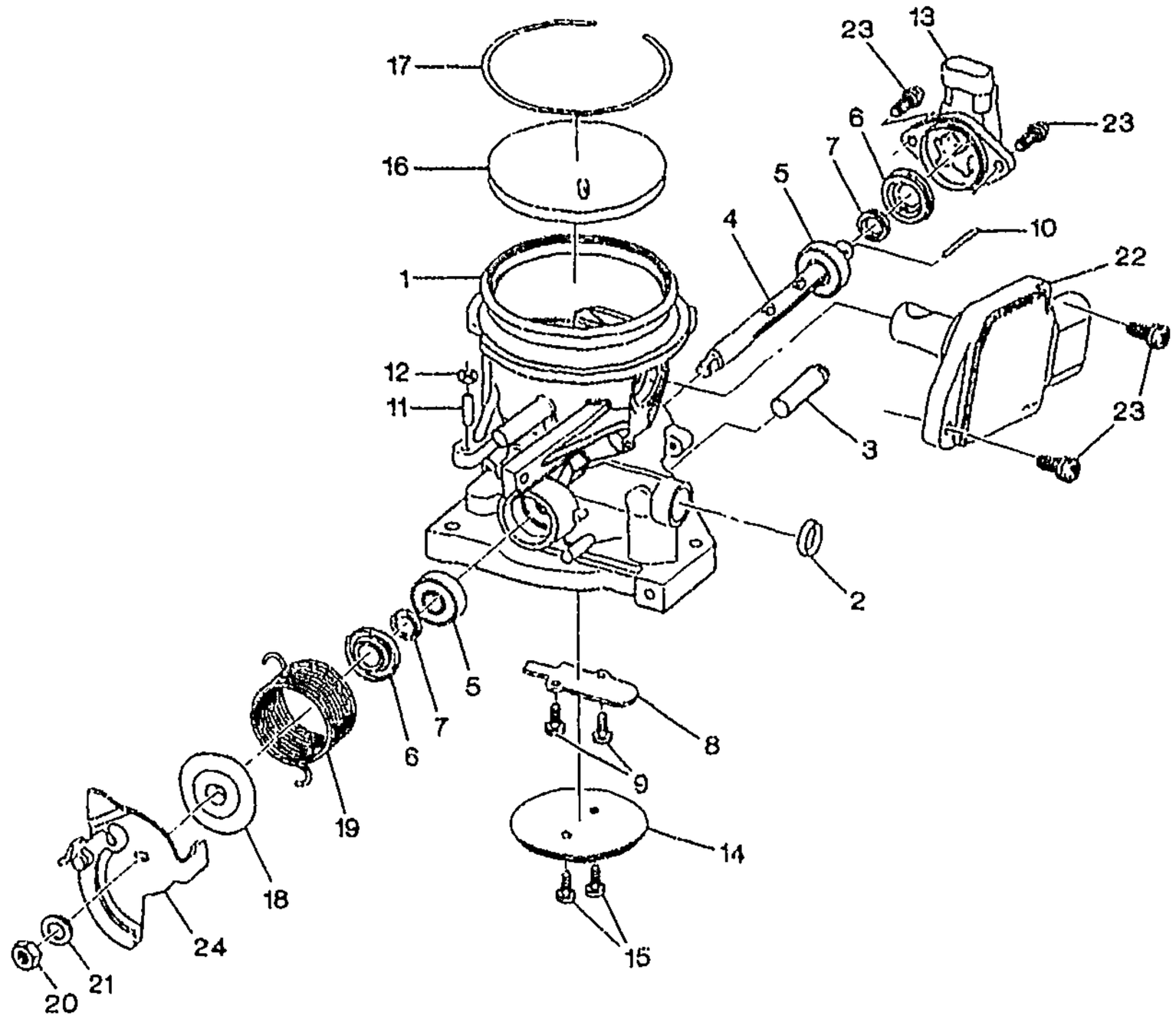

GM03-306F

1996-1998 F THROTTLE BODY/MPFI V6 (MODEL RHA57-4B)(L36/3.8K)(M30 A/TRANS)

1.		N.S.	THROTTLE, BODY (*KIT1)		.....		
2.		N.S.	PLUG, IDLE AIR (*KIT1)		.....		
3.		N.S.	PIPE, VACUUM (*KIT1)		.....		
4.		N.S.	SHAFT, THROTTLE (*KIT1)		.....		
5.		N.S.	BEARING, BALL (*KIT1)		.....		
6.		N.S.	SEAL, RING (*KIT1)		.....		
7.		N.S.	SEAL, DUST (*KIT1)		.....		
8.		N.S.	PLATE, BACK (*KIT1)		.....		
9.		N.S.	SCREW, BACK PLATE (*KIT1) ...		.....		
10.		N.S.	PIN, TPS DRIVE (*KIT1)		.....		
11.		N.S.	SCREW, ADJUST (IDLE) (*KIT1) .		.....		
12.		N.S.	NUT, (M5) (*KIT1)		.....		
13.	4-A25	3.339	SENSOR, THROT BODY THROT POSN (*KIT1) (AC-DELCO #213-916)	96-98	F (L36, M30)	1	24504798
14.		N.S.	VALVE, THROTTLE (*KIT1)		.....		

cardiagn.com

15.		N.S.	**SCREW**, (THROTTLE VALVE) (*KIT1)				
16.	4-A24	3.337	**SCREEN**, THROT BODY AIR INL (*KIT1) (AC-DELCO #217-1425)	96-98	F (L36)	1	24503677
17.	4-A22	3.335	**RING**, THROT BODY AIR INL SCRN RET (*KIT1)	96-98	F (L36)	1	24503676
18.		N.S.	**SLEEVE**, (SPRING) (*KIT1)				
19.		N.S.	**SPRING**, LEVER (*KIT1)				
20.		N.S.	**NUT**, LEVER (*KIT1)				
21.		N.S.	**WASHER**, SPRING LEVER (*KIT1)				
22.	4-C26	3.682	**SENSOR**, MASS AIRFLOW (*KIT1) (AC-DELCO #213-278) (3 SCREW ATCH)	96	F (L36, M30) (1ST DES)	1	24504302
	4-C26	3.682	**SENSOR**, MASS AIRFLOW (*KIT1) (AC-DELCO #213-301)	98	F (L36, M30)	1	24505519
	4-C26	3.682	**SENSOR**, MASS AIRFLOW (2 SCREW ATCH) (*KIT1) (AC-DELCO #213-301)	96-97	F (L36, M30) (2ND DES)	1	24505519
23.		N.S.	**SCREW**, MASS AIR FLOW SENSOR (AFS, TPS) (*KIT1, KIT2)				
24.		N.S.	**LEVER**, THROTTLE SHAFT (*KIT1)				

SERVICE KITS

1.	4-A22	3.335	**BODY**, THROT (INCL ITEMS #1 THRU 24)) (AC-DELCO #24503386)	96-98	F (L36, M30)	1	24503386
2.	4-A23	3.336	**ATTACHMENT KIT**, THROT BODY (SCREWS & CLIPS) (INCL ITEMS #23) (AC-DELCO #217-1407)	96-98	F (L36)	1	12537403

RPO DEFINITIONS
L36 -- ENGINE GAS, 6 CYL, 3.8K, MFI, V6, HO (ERV6 SERIES)
M30 -- TRANSMISSION,AUTOMATIC 4 SPEED,4L60E,ELECTRONIC

cardiagn.com

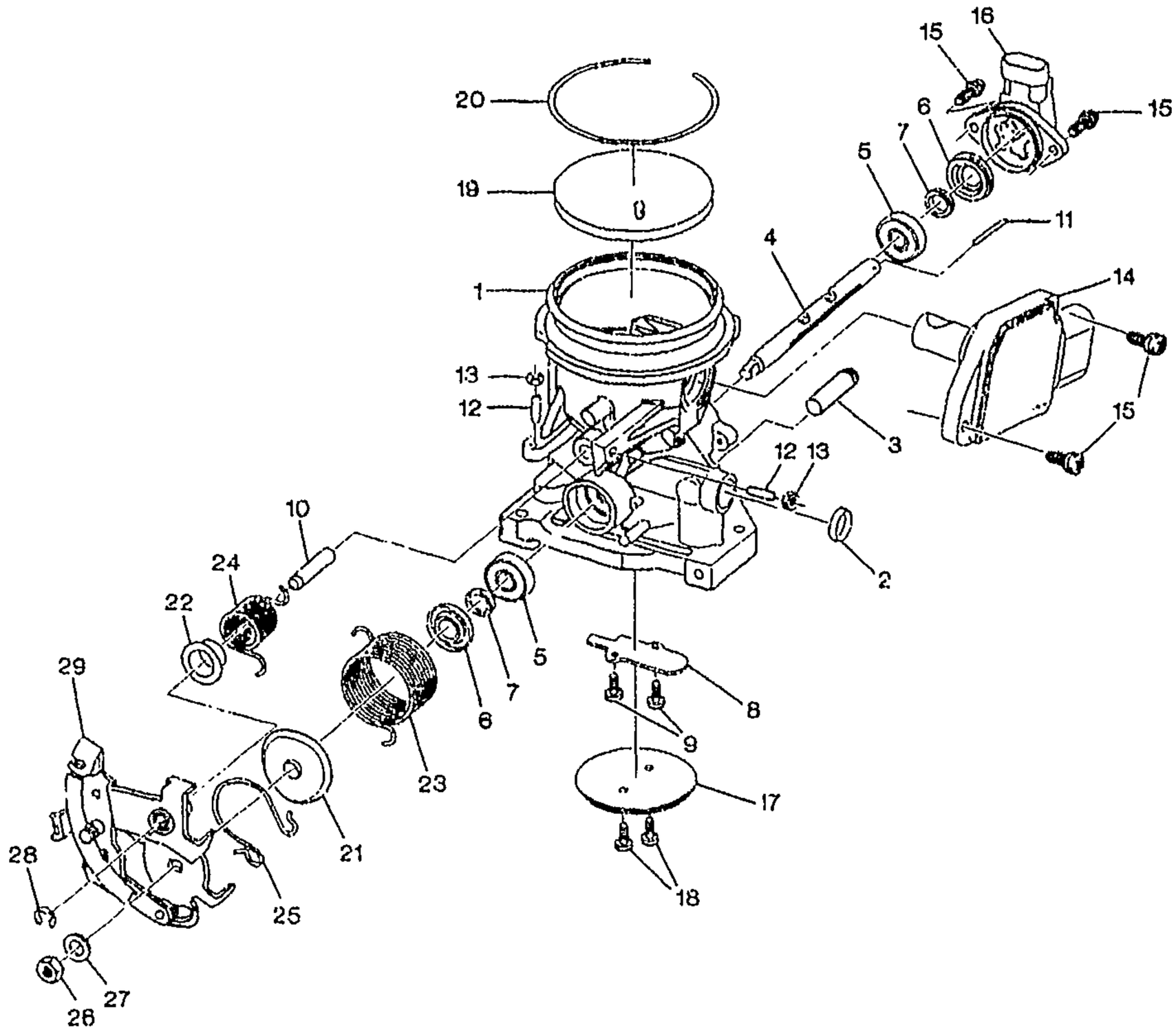

GM03-307F

1996-1998 F THROTTLE BODY/MPFI V6 (MODEL RHA57-4B)(L36/3.8K)(W/M49-MANUAL TRANSMISSION)

1.		N.S.	THROTTLE, BODY (*KIT1)		.....		
2.		N.S.	PLUG, IDLE AIR (*KIT1)		.....		
3.		N.S.	PIPE, VACUUM (*KIT1)		.....		
4.		N.S.	SHAFT, THROTTLE (*KIT1)		.....		
5.		N.S.	BEARING, BALL (*KIT1)		.....		
6.		N.S.	SEAL, RINGPRESS (*KIT1)		.....		
7.		N.S.	SEAL, DUST (*KIT1)		.....		
8.		N.S.	PLATE, BACK (*KIT1)		.....		
9.		N.S.	SCREW, BACK PLATE (*KIT1) ...		.....		
10.		N.S.	SHAFT, DRIVE SHAFT (*KIT1) ...		.....		
11.		N.S.	PIN, SPRING (*KIT1)		.....		
12.		N.S.	SCREW, (IDLE ADJUST) (*KIT1) .		.....		
13.		N.S.	NUT, ADJ (M5) (*KIT1)		.....		
14.	4-C26	3.682	SENSOR, MASS AIRFLOW (*KIT1) (AC-DELCO #213-301)	96-98	F (L36, M49)	1	24505519

cardiagn.com

15.		N.S.	SCREW, (M4X14) (*KIT1, KIT2)				
16.	4-A25	3.339	SENSOR, THROT BODY THROT POSN (*KIT1) (AC-DELCO #213-916)	96-98	F (L36, M49)	1	24504798
17.		N.S.	VALVE, THROTTLE (*KIT1)				
18.		N.S.	SCREW, (THROTTLE VALVE) (*KIT1, KIT2)				
19.	4-A24	3.337	SCREEN, THROT BODY AIR INL (*KIT1) (AC-DELCO #217-1425)	96-98	F (L36)	1	24503677
20.	4-A22	3.335	RING, THROT BODY AIR INL SCRN RET	96-98	F (L36)	1	24503676
21.		N.S.	SLEEVE, NYLON (MAIN SPRING) (*KIT1)				
22.		N.S.	SLEEVE, NYLON (SUB SPRING) (*KIT1)				
23.		N.S.	SPRING, MAIN (*KIT1)				
24.		N.S.	SPRING, (SUB) (*KIT1)				
25.		N.S.	SPRING, (ASSIST) (*KIT1)				
26.		N.S.	NUT, (M8) (*KIT1)				
27.		N.S.	WASHER, SPRING (M8) (*KIT1)				
28.		N.S.	E RING, LEVER ASM (*KIT1, KIT2)				
29.		N.S.	LEVER ASSEMBLY, (*KIT1)				

SERVICE KITS

1.	4-A22	3.335	BODY, THROT (14MM STUD CR/CONT CABLE, ATCH STUD ON ORIG THROT BODY) (INCL ITEMS #1 THRU 29)) (AC-DELCO #24503387)	96-98	F (L36, M49)	1	24503387
2.	4-A23	3.336	ATTACHMENT KIT, THROT BODY (SCREWS & CLIPS) (INCLS ITEMS #15, 18, 28) (AC-DELCO #217-1407)	96-98	F (L36)	1	12537403

RPO DEFINITIONS
L36 – ENGINE GAS, 6 CYL, 3.8K, MFI, V6, HO (ERV6 SERIES)
M49 – TRANSMISSION MAN 5 SPD, BORG WARNER, 77MM, 3.75 1ST, .76 5TH, O/D

cardiagn.com

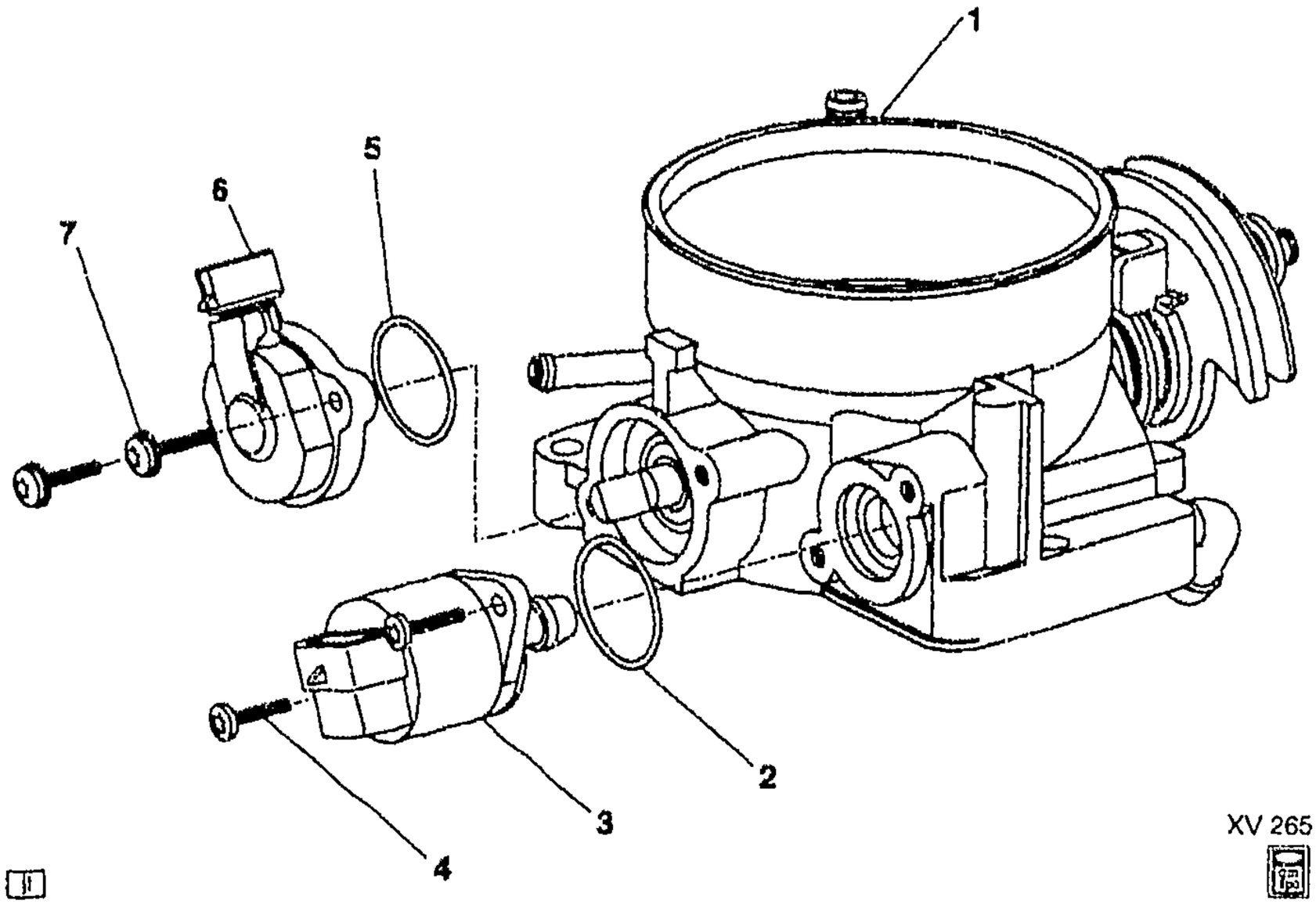

GM03-328

1998-2002 F THROTTLE BODY/MPFI V6 (MODEL 145)(LS1/5.7G)

1.	N.S.	**BODY**, THROTTLE (*KIT1)	.....
2.	N.S.	**SEAL**, IAC VALVE ASM (O-RING (*KIT1, KIT3, KIT4)	.....
3.	N.S.	**VALVE**, IDLE AIR CONTROL (IAC) (*KIT1, KIT3)	.....
4.	N.S.	**SCREW**, IDLE VALVE ATTACHING (*KIT1, KIT5)	.....
5.	N.S.	**SEAL**, TP SENSOR (O-RING (*KIT1, KIT2)	.....
6.	N.S.	**SENSOR**, THROTTLE POSITION (TP) (*KIT1, KIT2)	.....
7.	N.S.	**SCREW**, SENSOR ATTACHING (TP) (*KIT1, KIT5)	.....

SERVICE KITS

1.	4-A22	3.335	**BODY**, THROT (INCLS 1, 2, 3, 4, 5, 6, 7) (AC-DELCO #17113390)	98-99	F (LS1)	1	17113390
	4-A22	3.335	**BODY**, THROT (INCLS 1, 2, 3, 4, 5, 6, 7) (AC-DELCO #17113647)	00-02	F (LS1)	1	17113647
2.	4-A25	3.339	**SENSOR**, THROT POSN (INCLS 5, 6) (W/SEAL) (AC-DELCO #213-912)	98-02	F (LS1)	1	17123852
3.	4-D10	3.820	**VALVE KIT**, IDLE AIR CONT (THROT BODY) (INCLS 2, 3) (3.336) (AC-DELCO #17113391)	98-99	F (LS1)	1	17113391

cardiagn.com

	4–D10	3.820	VALVE, IDLE AIR CONT (AC–DELCO #17113598)	00–02	F (LS1)	1	17113598
	4–N25	9.280	VALVE, IDLE AIR CONT (3.820) (AC–DELCO #17113598)	00–02	F (LS1)	1	17113598
4.	4–A23	3.336	SEAL, IDLE AIR C/VLV (O RING) (INCL 2) (AC–DELCO #217–1428)	98–02	F (LS1)	1	17082049
5.	4–A24	3.338	BOLT/SCREW KIT, IDLE AIR C/VLV & THROT POSN SEN (INCL 4, 7) (3.336) (AC–DELCO #17113119)	98–02	F (LS1)	1	17113119

RPO DEFINITIONS

LS1 – ENGINE GAS, 8 CYL, 5.7L, SFI, ALUMINUM ENGINE

cardiagn.com

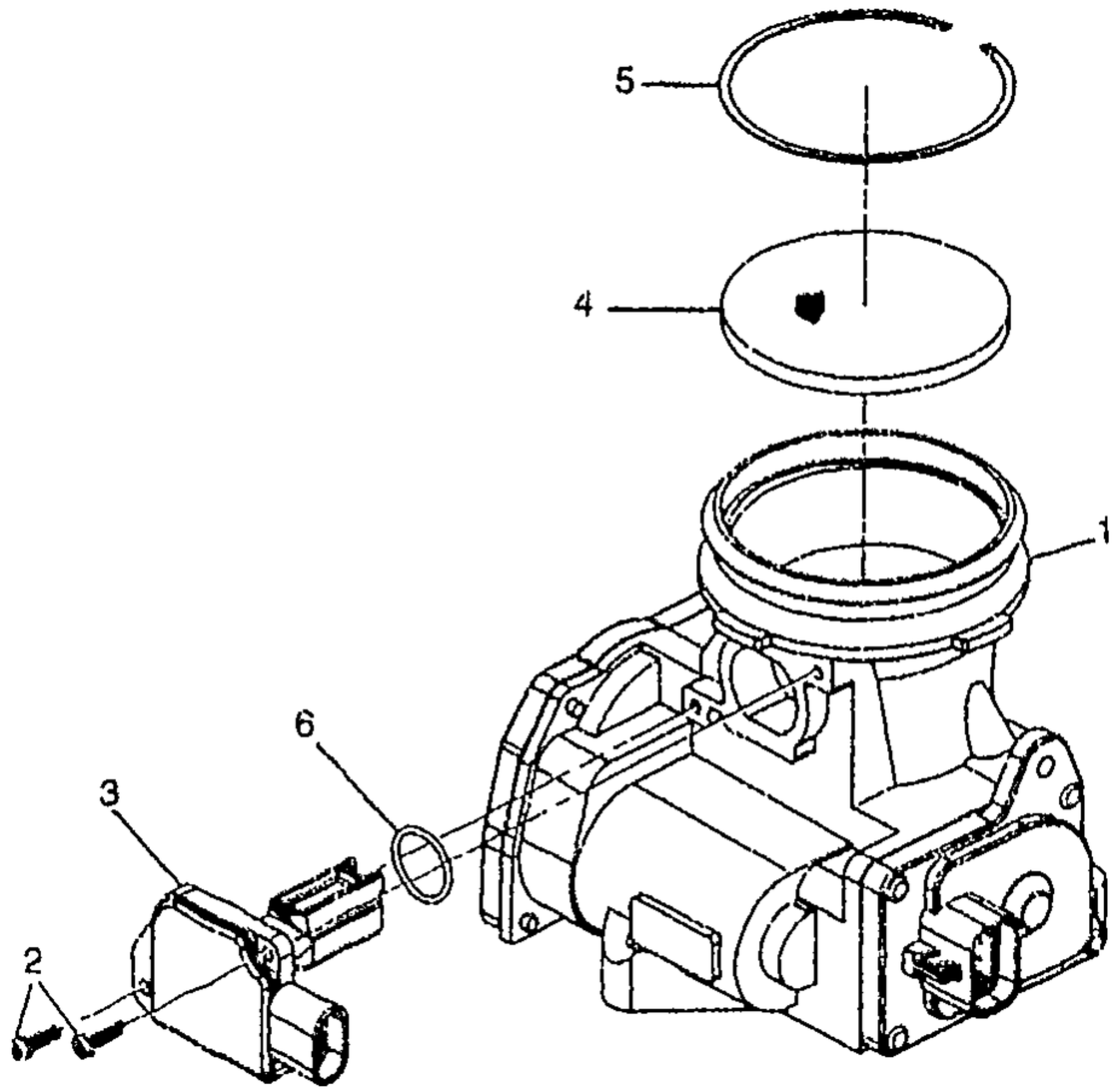

GM03-337

1999-2002 F THROTTLE BODY/MPFI V6 (MODEL-ELECTRONIC THROTTLE ACTUATION CONTROL-TAC)(L36/3.8K)

1.	4-A22	3.335	BODY, THROT (INCLS 2, 3, 4, 5, 6) (AC-DELCO #24507244)	01-02	F (L36)	1	24507244
	4-A22	3.335	BODY, THROT (W/ELEC THR BODY) (INCLS 2, 3, 4, 5, 6) (AC-DELCO #24507244)	99-00	F (L36)	1	24507244
2.		N.S.	SCREW, MASS AIRFLOW (*KIT1)		.....		
3.	4-C26	3.682	SENSOR, MASS AIRFLOW (PART OF 1) (INCL 6) (AC-DELCO #213-952)	99-01	F (L36)	1	12568877
	4-C26	3.662	SENSOR, MASS AIRFLOW (PART OF 1) (INCL 6) (AC-DELCO #213-952)	02	F (LS1)	1	12568877
4.	4-A24	3.337	SCREEN, THROT BODY AIR INL (PART OF 1) (AC-DELCO #217-1425)	99-02	F (L36)	1	24503677
5.	4-A22	3.335	RING, THROT BODY AIR INL SCRN RET (PART OF 1)	99-02	F (L36)	1	24503676
6.		N.S.	SEAL, MASS AIR FLOW SEN (PART OF 1 AND 3)		.....		

cardiagn.com

SERVICE KITS

1.	**4–A23**	**3.336**	**ATTACHMENT KIT, THROT BODY (SCREWS & CLIPS) (INCL #2) (AC–DELCO #217–1407) . .**	**99–02**	F (L36)	**1**	**12537403**

RPO DEFINITIONS

LS1 -- ENGINE GAS, 8 CYL, 5.7L, SFI, ALUMINUM ENGINE
L36 -- ENGINE GAS, 6 CYL, 3.8K, MFI, V6, HO (ERV6 SERIES)

cardiagn.com

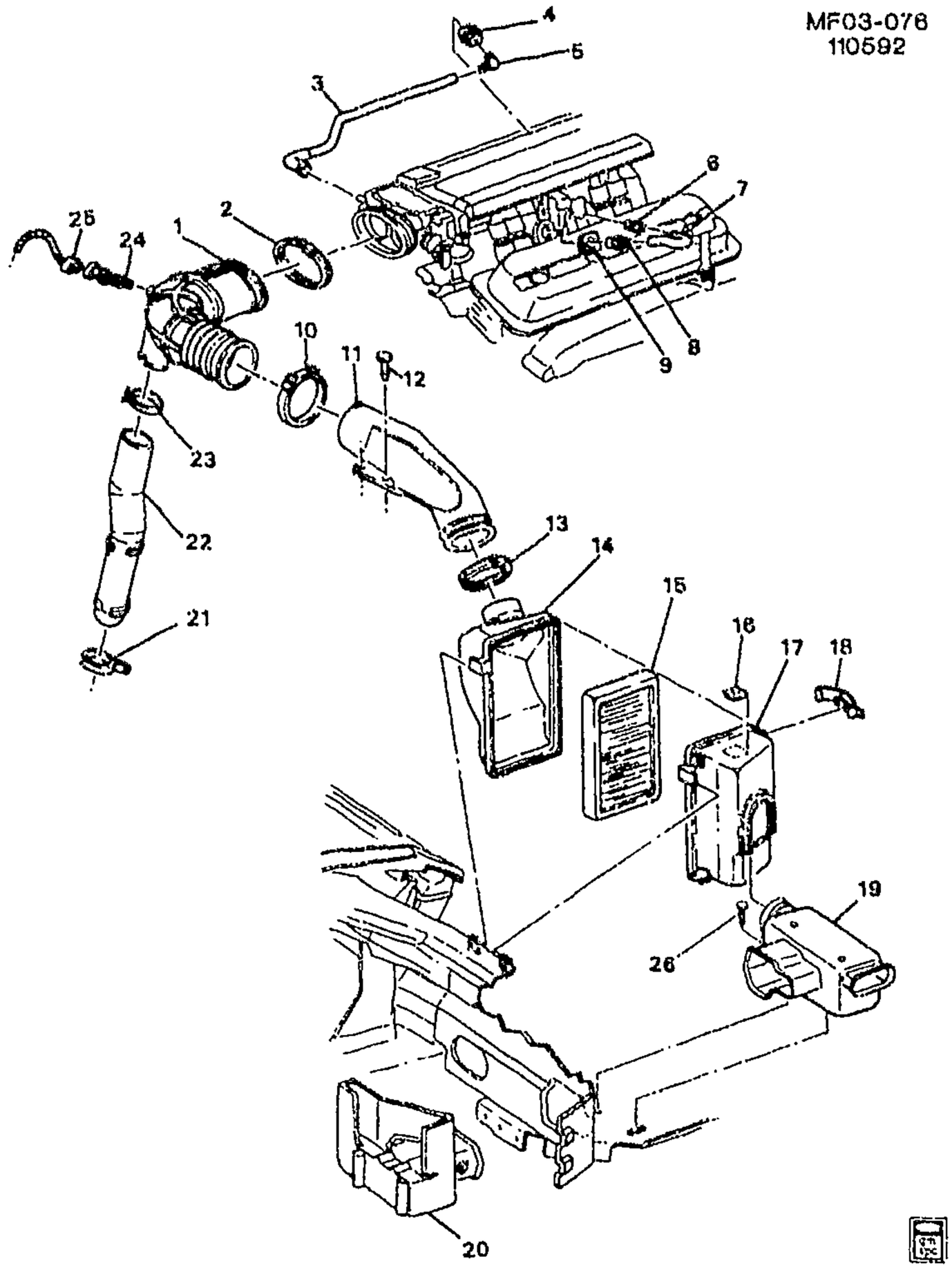

1993 F AIR INTAKE SYSTEM (LT1/5.7P)

1.	4-A25	3.407	DUCT, A/CL OTLT RR (W/INT AIR TEMP SEN) (INCLS 2, 10, 21-24)	93	F (LT1, C60) (EXC VP6)	1	25147209
	4-A25	3.407	DUCT, A/CL OTLT RR (W/INT AIR TEMP SEN) (INCLS 2, 10, 21-24)	93	F (LT1, C41) (EXC VP6)	1	25147210
	4-A25	3.407	DUCT, A/CL OTLT RR (W/INT AIR TEMP SEN) (INCLS 2, 10, 21-24)	93	F (LT1, C60, VP6) (EXPORT)	1	25147211
2.		N.S.	CLAMP, A/CL OTLT RR DUCT (PART OF 1)		.....		
3.	4-N8	1.762	HOSE, PCV	93	F (LT1)	1	10128365
4.	4-N7	1.745	GROMMET, PCV VLV (1.762)	93	F (LT1)	LH	10207699

cardiagn.com

	4-N7	1.745	GROMMET, PCV VLV (TOP RR VALVE CVR) (23/32 ID-1.22 OD) .	93	F (LT1)	RH	10088126
5.	4-N8	1.762	CONNECTOR, PCV HOSE	93	F (LT1)	RH	12550625
6.	4-N7	1.745	CONNECTOR, PCV VLV HOSE (1/4-18 NPTF W/3/8 NIPPLE) ...	93	F (LT1)	1	336018
7.	4-N8	1.762	HOSE, PCV VLV	93	F (LT1)	1	10126361
8.	4-N7	1.745	VALVE, PCV (CV895C, 1 VACUUM PORT) (AC-DELCO #CV895C)	93	F (LT1)	1	25095452
9.	4-N7	1.745	GROMMET, PCV VLV (1.762)	93	F (LT1)	LH	10207699
	4-N7	1.745	GROMMET, PCV VLV (TOP RR VALVE CVR) (23/32 ID-1.22 OD) .	93	F (LT1)	RH	10088126
10.		N.S.	CLAMP, A/CL OTLT RR DUCT (PART OF 1)		.....		
11.	4-A25	3.407	DUCT, A/CL OTLT (INCLS 13)	93	F (LT1)	1	25162700
12.	4-A25	3.407	RETAINER, A/CL OTLT DUCT (PUSH IN) (3.417)	93	F	2	10105276
13.		N.S.	CLAMP, A/CL OTLT DUCT (PART OF 11)		.....		
14.	4-A25	3.402	CLEANER, AIR (INCLS 15-18) ..	93	F	1	25147156
15.	4-A26	3.410	ELEMENT, A/CL (PART OF 14) (AC-DELCO #A1163C)	93	F (LT1)	1	25098463
16.		N.S.	LABEL, A/CL (PART OF 14)		.....		
17.		N.S.	COVER, A/CL HSG (PART OF 14)		.....		
18.	4-A25	3.403	RETAINER, A/CL (PART OF 14) (HINGED CLIP TYPE; STAINLESS STEEL) (3.410)	93	F	2	25043286
19.	4-A27	3.417	DUCT, FRT INT AIR	93	F (EXC VP6)	1	25099578
	4-A27	3.417	DUCT, FRT INT AIR	93	F (LT1, VP6) (EXPORT)	1	25099674
20.	4-A27	3.417	BAFFLE, INT AIR	93	F	1	10237720
21.		N.S.	RETAINER, A/CL RESO (PART OF 1)		....		
22.		N.S.	DUCT, A/CL RESO (PART OF 1) ..		.....		
23.		N.S.	CLAMP, A/CL RESO (PART OF 1)		.....		
24.		N.S.	SENSOR, INT AIR TEMP (PART OF 1)		.....		
25.	4-C26	3.682	CONNECTOR, SEN-INT AIR TEMP (GRAY) (2-WAY F) (W/LEADS) (AC-DELCO #PT307)	93	F (LT1)	1	12102620
26.		8.950	RETAINER, FITS .250 HOLE, 1.01LG.700-OD NYLON BLACK (FRT AIR INT DUCT)	93	F	1	10121502

RPO DEFINITIONS
C41 - HEATER,OUTSIDE AIR,WITH FAN AND DEFROSTER
C60 - AIR CONDITIONER,FRONT,MANUAL CONTROLS
LT1 - ENGINE-GAS, 8 CYL, 5.7L(5.7P),MFI,HO
VP6 - NOISE LEVEL CONTROL

cardiagn.com

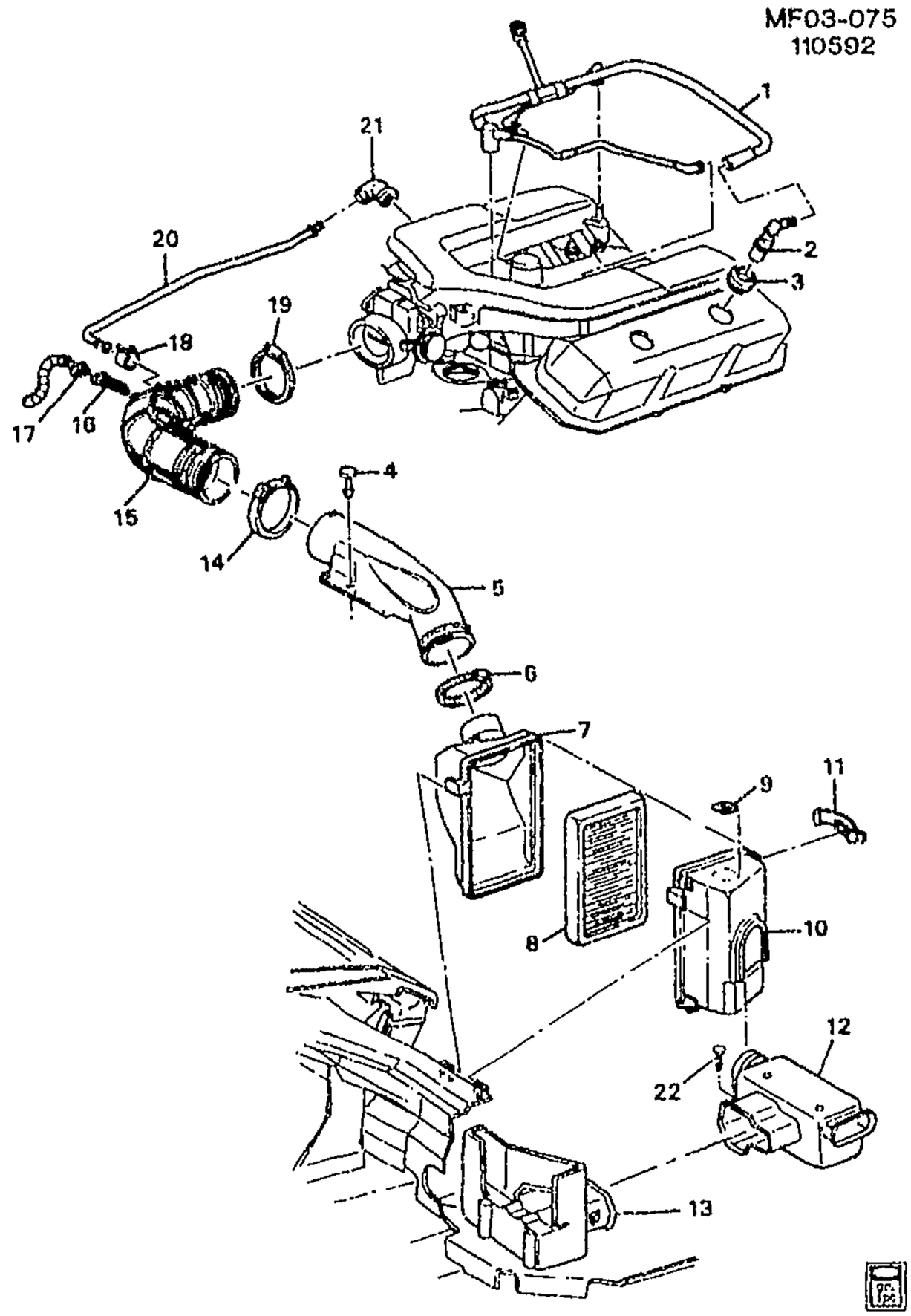

MF03-075

1993-1995 F AIR INTAKE SYSTEM (L32/3.4S)

1.	4-N7	1.745	HARNESS, PCV VLV	93-95	F (L32)	1	10217828
2.	4-N7	1.745	VALVE, PCV (AC-DELCO #CV789C)	93-95	F (L32)	1	8995284
3.	4-N7	1.745	GROMMET, PCV VLV	93-95	F (L32)	1	14091870
4.	4-A25	3.407	RETAINER, A/CL OTLT DUCT (PUSH IN) (3.417)	93	F	2	10105276
	4-A25	3.407	RETAINER, A/CL OTLT DUCT (PUSH IN)	95	F (L32)	1	12551599

cardiagn.com

	4-A25	3.407	RETAINER, A/CL OTLT DUCT (PUSH IN) (USE W/ASM OF 4.5-7.5MM THICK PNL W/6.3MM DIA HOLE, FOR 2ND DES SEE 12551599) (3.417)	94	F (1ST DES)	2	10105276
	4-A25	3.407	RETAINER, A/CL OTLT DUCT (PUSH IN) (USED ON ASM W/4.5-9.0MM THICK PNL W/8.0MM DIA HOLE, FOR 1ST DES SEE 10105276)	94	F (2ND DES)	1	12551599
5.	4-A25	3.407	DUCT, A/CL OTLT (INCLS 6)	93	F (L32, MD8)	1	25160026
	4-A25	3.407	DUCT, A/CL OTLT (INCLS 6)	93-95	F (L32, M49)	1	25162700
	4-A25	3.407	DUCT, A/CL OTLT (INCLS 6)	94-95	F (L32, M30)	1	25160026
6.		N.S.	CLAMP, A/CL OTLT DUCT (PART OF 5)				
7.	4-A25	3.402	CLEANER, AIR (INCLS 8-11)	93-95	F	1	25147156
8.	4-A26	3.410	ELEMENT, A/CL (PART OF 7) (AC-DELCO #A1163C)	93-95	F (L32)	1	25098463
9.		N.S.	LABEL, A/CL (PART OF 7)				
10.		N.S.	COVER, A/CL HSG (PART OF 7)				
11.	4-A25	3.403	RETAINER, A/CL (PART OF 7) (HINGED CLIP TYPE; STAINLESS STEEL) (3.410)	93-95	F	2	25043286
12.	4-A27	3.417	DUCT, FRT INT AIR	93	F (EXC VP6)	1	25099578
	4-A27	3.417	DUCT, FRT INT AIR	95	F (L32) (EXC VP6)	1	25099578
	4-A27	3.417	DUCT, FRT INT AIR	93-95	F (L32, VP6) (EXPORT)	1	25099674
13.	4-A27	3.417	BAFFLE, INT AIR	93-95	F	1	10237720
14.		N.S.	CLAMP, A/CL OTLT RR DUCT (PART OF 15)				
15.	4-A25	3.407	DUCT, A/CL OTLT RR (W/INT AIR TEMP SEN) (INCLS 14, 16, 19)	93-95	F (L32)	1	25098353
16.	4-C26	3.682	SENSOR, INT AIR TEMP (ALSO PART OF 15) (AC-DELCO #213-243)	93-95	F (L32)	1	12160244
17.	4-C26	3.682	CONNECTOR, SEN-INT AIR TEMP (GRAY) (2-WAY F) (W/LEADS) (AC-DELCO #PT307)	93	F (L32)	1	12102620
	4-C26	3.682	CONNECTOR, SEN-INT AIR TEMP (GRAY) (2-WAY F) (W/LEADS) (AC-DELCO #PT307)	94-95	F	1	12102620
18.		8.948	CLAMP, SIZE 6, .30MIN. - .87MAX - HEX/SLOTTED (C/CASE VENT TUBE)	93-95		1	15620999
19.		N.S.	CLAMP, A/CL OTLT RR DUCT (PART OF 15)				
20.	4-N8	1.762	TUBE, PCV	93-95	F (L32)	1	10118691
21.	4-N7	1.745	GROMMET, PCV TUBE (15/32I.D. X 25/32O.D)	93-95	F (L32)	1	14078872
22.		8.950	RETAINER, FITS .250 HOLE, 1.01LG.700-OD NYLON BLACK (FRT AIR INT DUCT)	93-95	F	1	10121502

RPO DEFINITIONS
L32 - ENGINE,3.4L,V6,(3.4S),SFI,OHV
MD8 -- TRANSMISSION,AUTOMATIC 4-SPEED(THM700R4/4L60)
M30 - TRANSMISSION,AUTOMATIC 4 SPEED,4L60E,ELECTRONIC

cardiagn.com

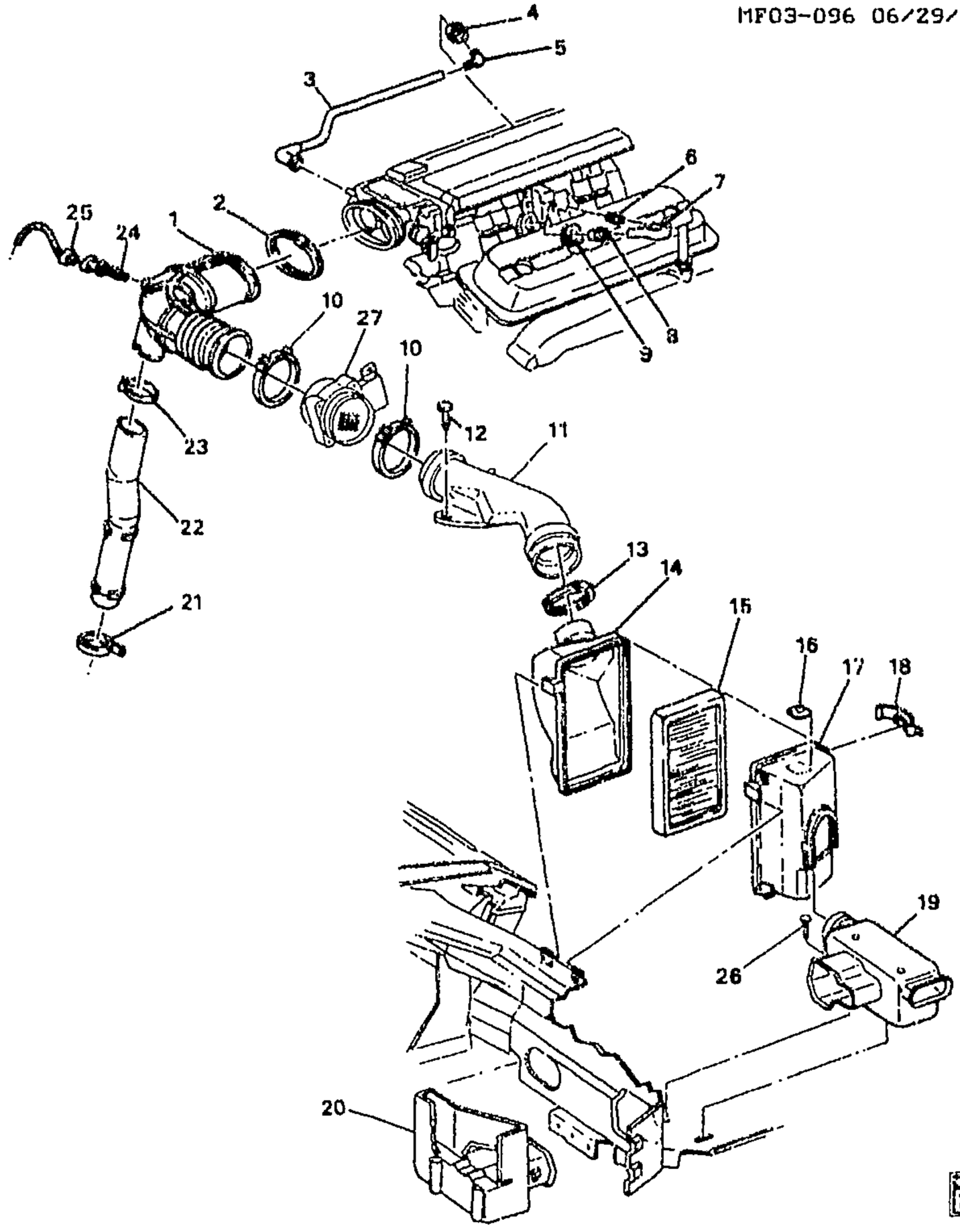

MF03-096

1994-1997 F AIR INTAKE SYSTEM (LT1/5.7P)

1.	4-A25	3.407	DUCT, A/CL OTLT RR (W/INT AIR TEMP SEN) (INCLS 2, 10, 21-24)	94	F (LT1, C60) (EXC VP6)	1 25147209
	4-A25	3.407	DUCT, A/CL OTLT RR (W/INT AIR TEMP SEN) (INCLS 2, 10, 21-24)	94	F (LT1, C41) (EXC VP6)	1 25147210
	4-A25	3.407	DUCT, A/CL OTLT RR (W/INT AIR TEMP SEN) (INCLS 2, 10, 21-24)	95	F (LT1, C60) (EXC VP6)	1 25147186
	4-A25	3.407	DUCT, A/CL OTLT RR (W/INT AIR TEMP SEN) (INCLS 2, 10, 21-24)	95	F (LT1, C41) (EXC VP6)	1 25147187
	4-A25	3.407	DUCT, A/CL OTLT RR (W/INT AIR TEMP SEN) (INCLS 2, 10, 21-24)	96-97	F (LT1) (EXC VP6)	1 25147186

cardiagn.com

	4-A25	3.407	DUCT, A/CL OTLT RR (W/INT AIR TEMP SEN) (INCLS 2, 10, 21-24)	94	F (LT1, C60, VP6) (EXPORT)	1	25147211
	4-A25	3.407	DUCT, A/CL OTLT RR (W/INT AIR TEMP SEN) (INCLS 2, 10, 21-24)	95	F (LT1, C60, VP6) (EXPORT)	1	25147188
	4-A25	3.407	DUCT, A/CL OTLT RR (W/INT AIR TEMP SEN) (INCLS 2, 10, 21-24)	96-97	F (LT1, VP6) (EXPORT)	1	25147188
2.		N.S.	CLAMP, A/CL OTLT RR DUCT (PART OF 1)				
3.	4-N8	1.762	HOSE, PCV (INCLS 5)	94-97	F (LT1)	1	10128365
4.	4-N7	1.745	GROMMET, PCV VLV (TOP RR VALVE CVR) (23/32 ID-1.22 OD)	94-97	F (LT1)	RH	10088126
5.	4-N8	1.762	CONNECTOR, PCV HOSE (PART OF 3)	94-97	F (LT1)	RH	12550625
6.	4-N7	1.745	CONNECTOR, PCV VLV HOSE (1/4-18 NPTF W/3/8 NIPPLE)	94-97	F (LT1)	1	336018
7.	4-N8	1.762	HOSE, PCV VLV	94	F (LT1)	1	10128361
	4-N8	1.762	HOSE, PCV VLV	95-97	F (LT1)	1	12551389
8.	4-N7	1.745	VALVE, PCV (CV895C, 1 VACUUM PORT) (AC-DELCO #CV895C)	94-97	F (LT1)	1	25095452
9.	4-N7	1.745	GROMMET, PCV VLV (INT MANIF) (1.762)	94-97	F (LT1)	LH	10240676
10.		N.S.	CLAMP, A/CL OTLT RR DUCT (PART OF 1, 27)				
11.	4-A25	3.407	DUCT, A/CL OTLT (INCLS 13)	94-97	F (LT1)	1	25160024
12.	4-A25	3.407	RETAINER, A/CL OTLT DUCT (PUSH IN)	95-97	F (LT1)	1	12551599
	4-A25	3.407	RETAINER, A/CL OTLT DUCT (PUSH IN) (USE W/ASM OF 4.5-7.5MM THICK PNL W/6.3MM DIA HOLE, FOR 2ND DES SEE 12551599) (3.417)	94	F (1ST DES)	2	10105276
	4-A25	3.407	RETAINER, A/CL OTLT DUCT (PUSH IN) (USED ON ASM W/4.5-9.0MM THICK PNL W/8.0MM DIA HOLE, FOR 1ST DES SEE 10105276)	94	F (2ND DES)	1	12551599
13.		N.S.	CLAMP, A/CL OTLT DUCT (PART OF 11)				
14.	4-A25	3.402	CLEANER, AIR (INCLS 15, 16, 17, 18)	94-97	F	1	25147156
15.	4-A26	3.410	ELEMENT, A/CL (PART OF 14) (AC-DELCO #A1163C)	94-97	F (LT1)	1	25098463
16.		N.S.	LABEL, A/CL (PART OF 14)				
17.		N.S.	COVER, A/CL HSG (PART OF 14)				
18.	4-A25	3.403	RETAINER, A/CL (PART OF 14) (HINGED CLIP TYPE; STAINLESS STEEL) (3.410)	94-97	F	2	25043286
19.	4-A27	3.417	DUCT, FRT INT AIR	94-97	F (LT1) (EXC VP6)	1	25099578
	4-A27	3.417	DUCT, FRT INT AIR	97	F (LT1, VP6)	1	25164268
	4-A27	3.417	DUCT, FRT INT AIR	94-96	F (LT1, VP6) (EXPORT)	1	25099674
20.	4-A27	3.417	BAFFLE, INT AIR	94-97	F	1	10237720
21.		N.S.	RETAINER, A/CL RESO (PART OF 1)				
22.		N.S.	DUCT, A/CL RESO (PART OF 1)				
23.		N.S.	CLAMP, A/CL RESO (PART OF 1)				
24.	4-C26	3.682	SENSOR, INT AIR TEMP (PART OF 1) (AC-DELCO #213-243)	94	F (LT1, C41) (EXC VP6)	1	12160244

cardiagn.com

	4-C26	3.682	SENSOR, INT AIR TEMP (PART OF 1) (AC-DELCO #213-243) ..	94	F (LT1, C60)	1	12160244
	4-C26	3.682	SENSOR, INT AIR TEMP (PART OF 1) (AC-DELCO #213-243) ..	95-97	F (LT1)	1	12160244
25.	4-C26	3.682	CONNECTOR, SEN-INT AIR TEMP (GRAY) (2-WAY F) (W/LEADS) (AC-DELCO #PT307)	94-97	F	1	12102620
26.		8.950	RETAINER, FITS .250 HOLE, 1.01LG.700-OD NYLON BLACK (FRT AIR INT DUCT)	94-97	.....	1	10121502
27.	4-C26	3.682	SENSOR, MASS AIRFLOW (INCLS 10) (INCLS SNSR & 2 CLMPS) (AC-DELCO #213-252)	94-97	F (LT1)	1	25008308

RPO DEFINITIONS

C41 – HEATER,OUTSIDE AIR,WITH FAN AND DEFROSTER
C60 – AIR CONDITIONER,FRONT,MANUAL CONTROLS
LT1 – ENGINE-GAS, 8 CYL, 5.7L(5.7P),MFI,HO
VP6 – NOISE LEVEL CONTROL

cardiagn.com

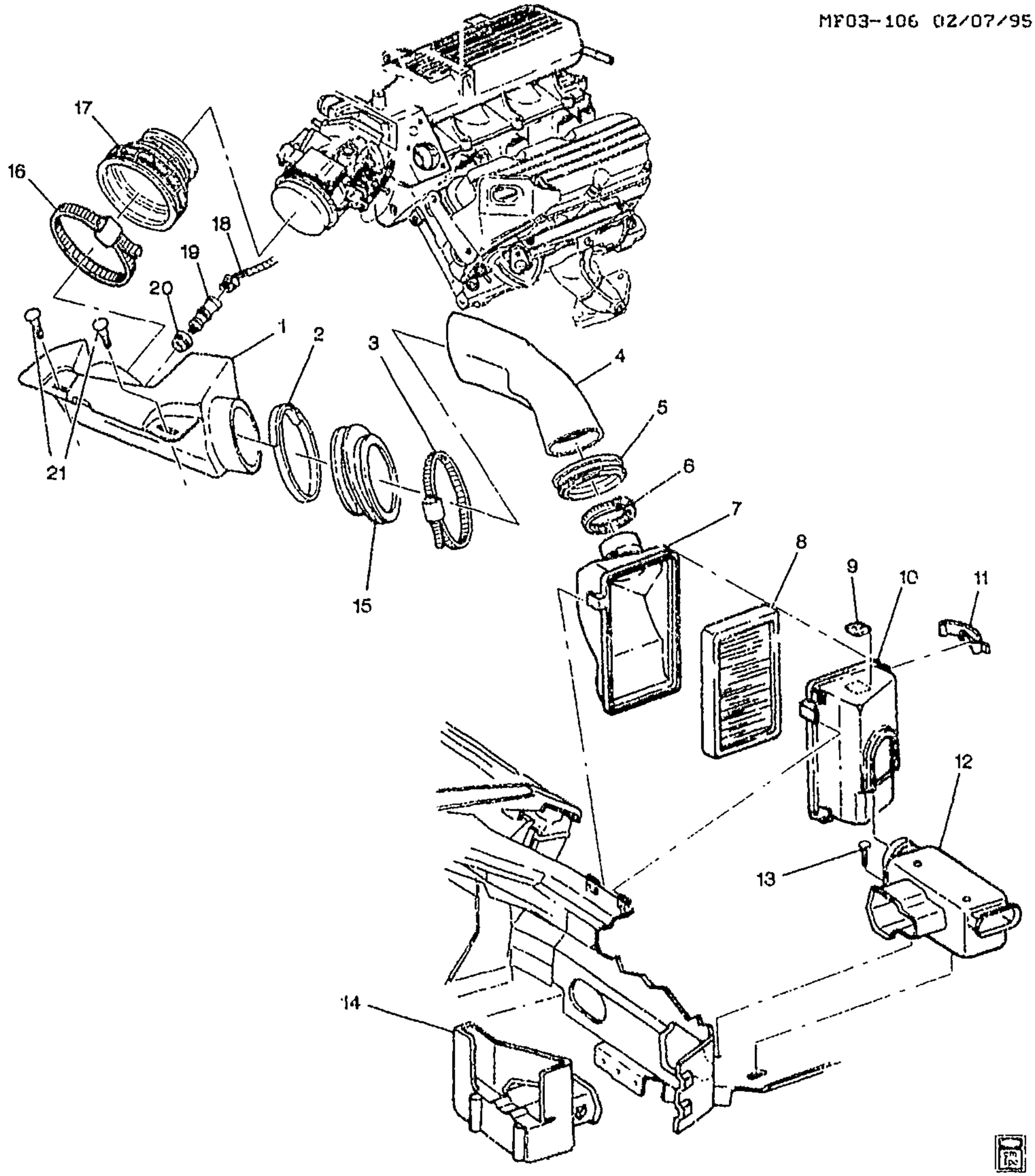

MF03-106

1995–1997 F AIR INTAKE SYSTEM (L36/3.8K)

1.	4–A27	3.417	**RESONATOR**, RR INT AIR DUCT (INCLS 2, 3, 15, 16, 17, 19, 20) . . .	95–97 F (L36)	1 24505181
2.		N.S.	**CLAMP**, INTER INT AIR DUCT (PART OF 1)	. . . . .	

cardiagn.com

3.	4–A27	3.417	**CLAMP**, RR INTER INT AIR DUCT (PART OF 1)	95–97	F (L36)	1	24503301
4.	4–A27	3.417	**DUCT**, INTER INT AIR (INCLS 5, 6)	95–97	F (L36)	1	24506058
5.		N.S.	**SEAL**, INTER INT AIR DUCT (PART OF 4)				
6.	4–A27	3.417	**CLAMP**, INTER INT AIR DUCT (PART OF 4)	95–97	F (L36)	1	24503301
7.	4–A25	3.402	**CLEANER**, AIR (INCLS 8–11)	95–97	F	1	25147156
8.	4–A26	3.410	**ELEMENT**, A/CL (PART OF 7) (AC–DELCO #A1163C)	95–97	F (L36)	1	25098463
9.		N.S.	**LABEL**, A/CL (PART OF 7)				
10.		N.S.	**COVER**, A/CL HSG (PART OF 7)				
11.	4–A25	3.403	**RETAINER**, A/CL (PART OF 7) (HINGED CLIP TYPE; STAINLESS STEEL) (3.410)	95–97	F	2	25043286
12.	4–A27	3.417	**DUCT**, FRT INT AIR	95–97	F (L36)	1	25099578
13.		6.950	**RETAINER**, FITS .250 HOLE, 1.01LG.700–OD NYLON BLACK (FRT INT AIR DUCT (PUSH IN))	95–97	F	1	10121502
14.	4–A27	3.417	**BAFFLE** INT AIR	95–97	F	1	10237720
15.		N.S.	**DUCT**, RR INTER INT AIR (PART OF 1)				
16.		N.S.	**CLAMP**, RR INT AIR DUCT RESO (PART OF 1)				
17.		N.S.	**DUCT**, RR INT AIR (PART OF 1)				
18.	4–C26	3.682	**CONNECTOR**, SEN–INT AIR TEMP (PART OF ENGINE WRG HARNESS) (GRAY) (2–WAY F) (W/LEADS) (AC–DELCO #PT307)	95–97	F	1	12102620
19.	4–C26	3.682	**SENSOR**, INT AIR TEMP (PART OF 1) (AC–DELCO #213–243)	95–97	F (L36)	1	12160244
20.	4–A27	3.415	**GROMMET**, INT AIR TEMP SEN (PART OF 1)	95–97	F (L36)	1	24504388
21.	4–A27	3.417	**RETAINER**, RR INT AIR DUCT RESO (TO UPR RAD PNL) (PUSH IN)	95–97	F (L36)	2	10105276

RPO DEFINITIONS

L36 – ENGINE GAS, 6 CYL, 3.8K, MFI, V6, HO (ERV6 SERIES)

cardiagn.com

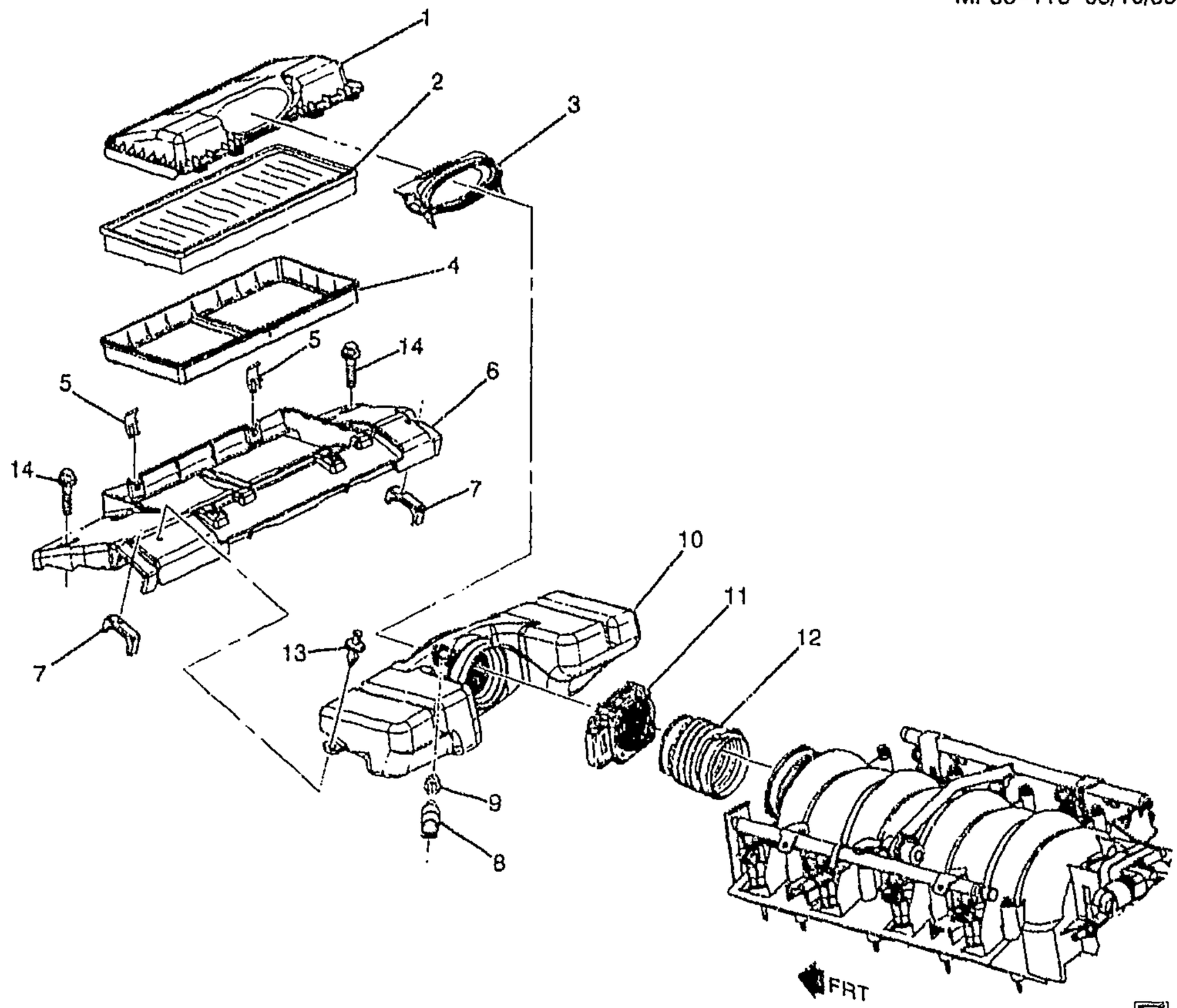

ch

MF03-110

1998-2002 F AIR INTAKE SYSTEM (LS1/5.7G)

1.	4-A26	3.410	COVER, A/CL HSG (3.407)	98-99	F (LS1)	1	25176483
	4-A26	3.410	COVER, A/CL HSG (3.407)	00	F (LS1)	1	25326245
	4-A26	3.410	COVER, A/CL HSG	01-02	F (LS1)	1	10308923
2.	4-A26	3.410	ELEMENT, A/CL (PAPER) (AC-DELCO #A917C)	98-02	F (LS1)	1	25042562
3.	4-A25	3.407	DUCT, A/CL OTLT	98-02	F	1	25171732
4.	4-A25	3.406	HOUSING, A/CL	98-02	F (LS1)	1	25166571
5.	4-A25	3.403	RETAINER, A/CL (HINGED CLIP TYPE; STAINLESS STEEL) (3.410)	98-02	F (LS1)	2	25043286
6.	4-N6	1.270	SUPPORT, RAD	98-02	F (LS1)	1	25170361
7.	4-N6	1.270	INSULATOR, RAD UPR	98-02	F	2	10188026
8.	4-C26	3.682	SENSOR, INT AIR TEMP (AC-DELCO #213-243)	98-02	F (LS1)	1	12160244
9.	4-A27	3.415	GROMMET, INT AIR TEMP SEN .	98-02	F (LS1)	1	24504389

cardiagn.com

10.	4-A25	3.407	DUCT, A/CL OTLT (W/RESO & INT AIR TEMP SEN)	98-99	F (LS1)	1	25175840
	4-A25	3.407	DUCT, A/CL OTLT (W/RESO & INT AIR TEMP SEN)	00-02	F (LS1)	1	25315017
11.	4-C26	3.682	SENSOR, MASS AIRFLOW (AC-DELCO #213-353)	98-02	F (LS1)	1	25179711
12.	4-A25	3.407	DUCT, A/CL OTLT	98-02	F	1	25170358
13.	4-A27	3.417	RETAINER, FRT INT AIR DUCT (PUSH IN) (3.407)	98-02	F (LS1)	2	12551599
14.		8.977	BOLT, HEX W/WA, M6X1X35, 9.8, POR, 24 OD, ABPT (A/CL)	98-02	.....	4	11513947

RPO DEFINITIONS

LS1 – ENGINE GAS, 8 CYL, 5.7L, SFI, ALUMINUM ENGINE

cardiagn.com

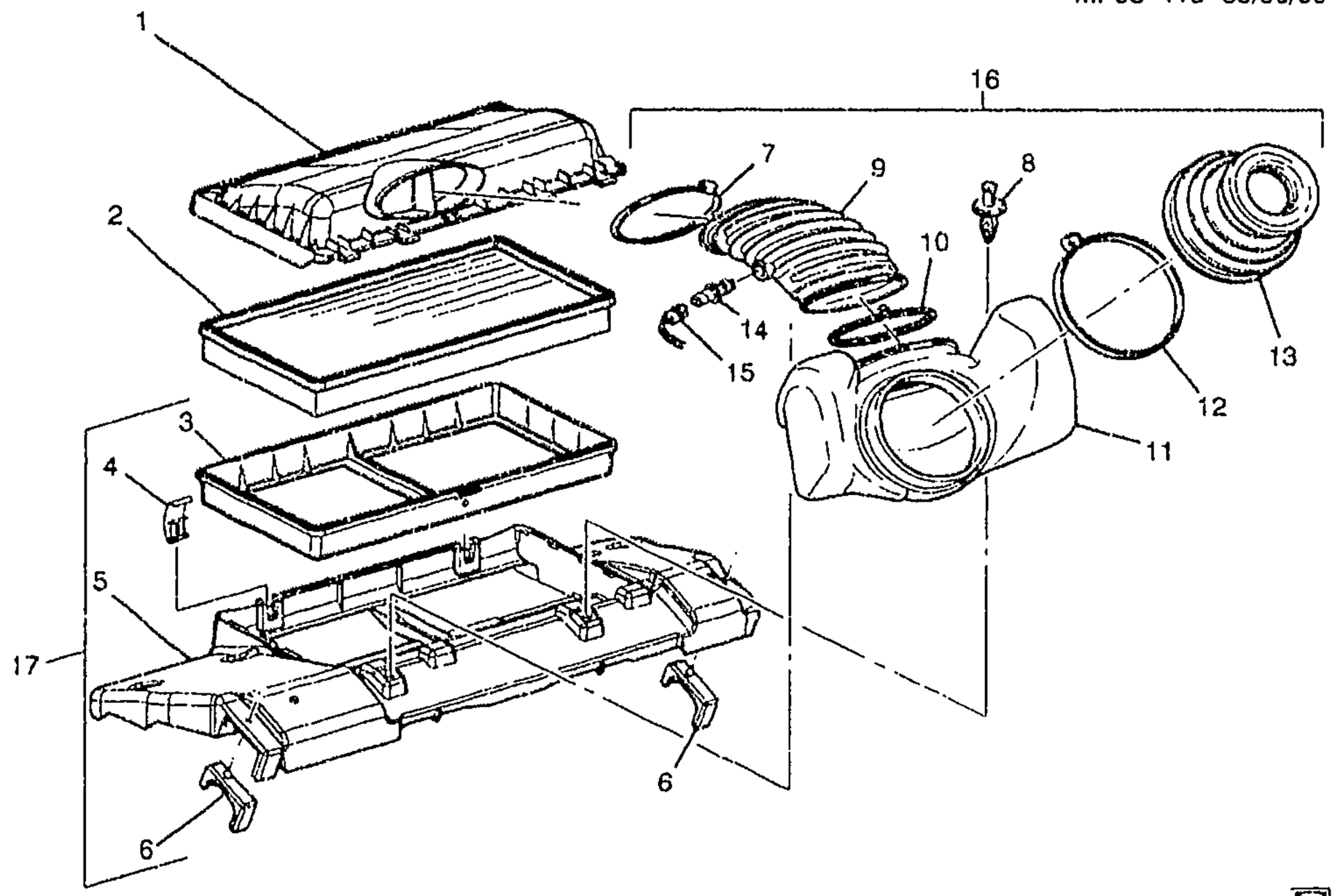

ch

MF03-119

1998-2002 F AIR INTAKE SYSTEM (L36/3.8K)

1.	4-A26	3.410	COVER, A/CL HSG	98-99	F (L36)	1	25326244
	4-A26	3.410	COVER, A/CL HSG	00-02	F (L36)	1	25326244
2.	4-A26	3.410	ELEMENT, A/CL (PAPER) (AC-DELCO #A917C)	98-02	F (L36)	1	25042562
3.	4-A25	3.406	HOUSING, A/CL	98-02	F (L36)	1	25166571
4.	4-A25	3.403	RETAINER, A/CL (PART OF 17) (HINGED CLIP TYPE; STAINLESS STEEL) (3.410)	98-02	F (L36)	2	25043286
5.	4-N6	1.270	SUPPORT, RAD (PART OF 17)	98-02	F (L36)	1	25170361
6.	4-N6	1.270	INSULATOR, RAD UPR (PART OF 17)	98-02	F	2	10188026
7.	4-A27	3.417	CLAMP, RR INTER INT AIR DUCT (PART OF 16)	98-02	F (L36)	1	24506615
8.	4-A27	3.417	RETAINER, FRT INT AIR DUCT (PUSH IN) (3.407)	98-02	F (L36)	2	12551599
9.		N.S.	DUCT, INTER INT AIR (PART OF 16)				
10.		N.S.	CLAMP, RR INTER INT AIR DUCT (PART OF 16)				
11.		N.S.	RESONATOR, RR INT AIR DUCT (PART OF 16)				
12.		N.S.	CLAMP, FRT INT AIR DUCT (PART OF 16)				

cardiagn.com

13.		N.S.	DUCT, FRT INT AIR (PART OF 16)		.....		
14.	4–C26	3.682	SENSOR, INT AIR TEMP (PART OF 16) (AC–DELCO #213–243) .	98–02	F (L36)	1	12160244
15.	4–C26	3.682	CONNECTOR, SEN–INT AIR TEMP (GRAY) (2–WAY F) (W/LEADS) (AC–DELCO #PT307)	98–02	F	1	12102620
16.	4–A27	3.417	RESONATOR, RR INT AIR DUCT (INCLS 7, 9–14)	98	F (L36)	1	24505565
	4–A27	3.417	RESONATOR, RR INT AIR DUCT (INCLS 7, 9–14)	99–02	F (L36)	1	12563057
17.	4–N6	1.270	SUPPORT, RAD UPR (INCLS 4, 5, 6)	98–02	F (L36)	1	25178622

RPO DEFINITIONS
L36 – ENGINE GAS, 6 CYL, 3.8K, MFI, V6, HO (ERV6 SERIES)

cardiagn.com

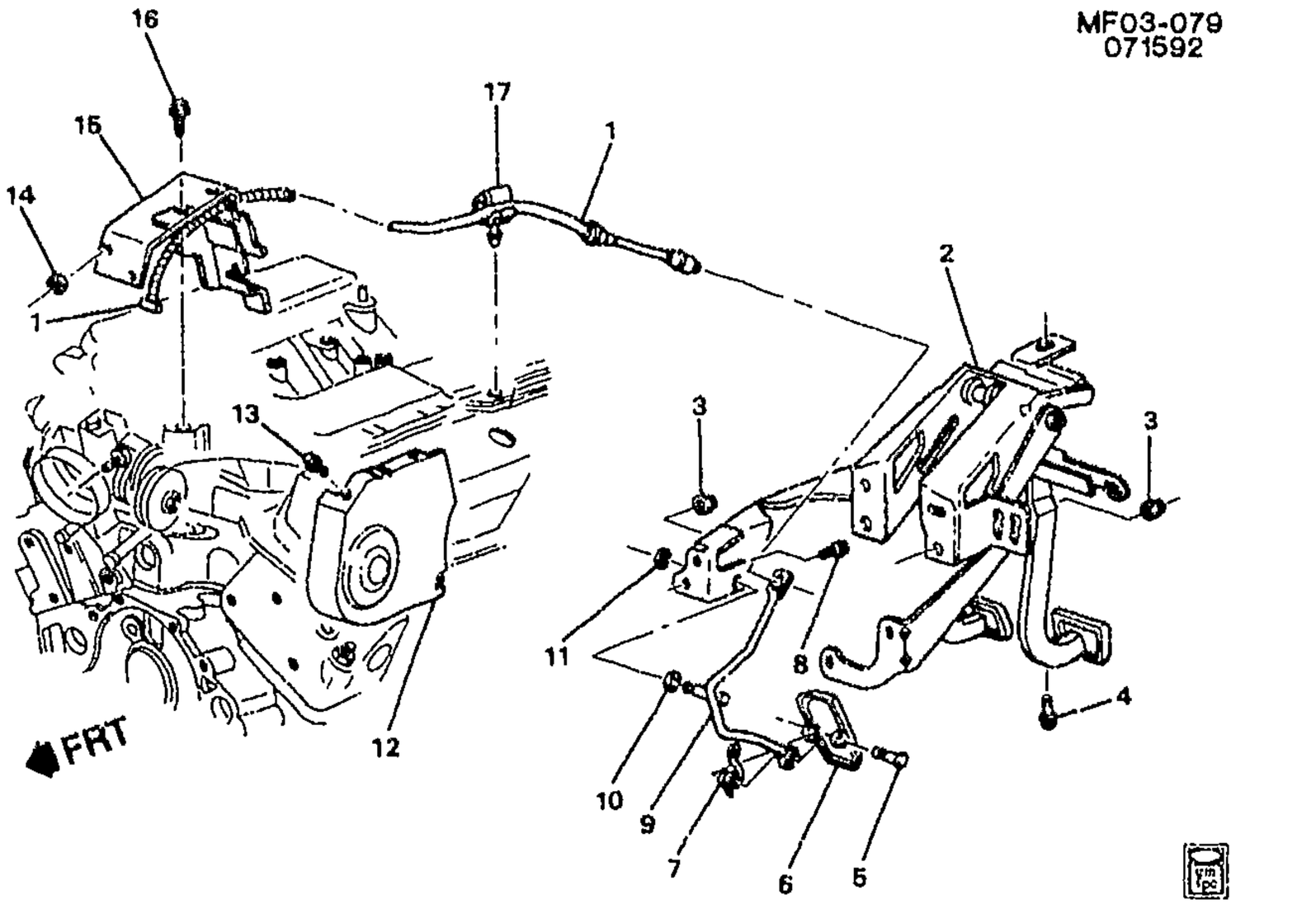

1993 F ACCELERATOR CONTROL–V6 (L32/3.4S)

1.	4–A28	3.430	**CABLE**, ACCEL CONT	93	F (L32)	1	10233815
2.	4–B2	3.451	**PEDAL**, BRK & ACCEL & CLU (W/BRKT) (INCLS 5–7, 9–11) (4.625)	93	F (M28)	1	10400399
	4–B2	3.451	**PEDAL**, BRK & ACCEL & CLU (W/BRKT) (INCLS 5–7, 9–11) (4.625)	93	F (M29)	1	10400399
	4–B2	3.451	**PEDAL**, BRK & ACCEL & CLU (W/BRKT) (INCLS 5–7, 9–11) (4.625)	93	F (M49)	1	10400399
	4–B2	3.451	**PEDAL**, BRK & ACCEL (W/BRKT) (INCLS 5–7, 9–11) (4.625)	93	F (MD8)	1	10400442
3.		8.917	**NUT**, M8X1.25X7.1, ZC 10 (BRK PED)	93		5	11515748
		8.929	**WASHER**, M8X24X2.3 (BRK PED)	93		5	11500323
4.		8.900	**BOLT–HEX**, M8X1.25X30, 22 THD, 24MM OD, 9.8, 7114M (BRK PED BRKT)	93		1	11516594
5.		N.S.	**PIN**, ACCEL PED PIV (PART OF 2)				
6.	4–B2	3.451	**PAD**, ACCEL PED (PART OF 2)	93	F	1	10254530
7.		N.S.	**SPRING**, ACCEL PED (PART OF 2)				
8.		8.900	**BOLT**, HFH M8X1.25X18 (BRK PED BRKT)	93		1	11513703
9.	4–B2	3.451	**PEDAL**, ACCEL (PART OF 2)	93	F	1	10254534
10.		N.S.	**WASHER**, ACCEL PED LVR (PART OF 2)				

cardiagn.com

11.		N.S.	RETAINER, ACCEL PED LVR (PART OF 2)		.....		
12.	4-B4	3.469	SHIELD, ACCEL CONT CBL SPH	93	F (L32)	1	10174474
13.		8.977	BOLT-SCREW, M4.2X1.41X13, 5.4 THD, 12.5 OD, GM6172M, GM6138M (ACCEL CONT CBL SPH SHLD)	93	.....	2	15714277
14.	4-B3	3.463	NUT, ACCEL CONT CBL BRKT (M8X1.25) (8.915) (AC-DELCO #11514596)	93	F (L32)	1	11514596
15.		DISCON	BRACKET, ACCEL CONT CBL ...	93	F (L32)	1	10111608
16.		8.900	BOLT, M8X1.25X14 (ACCEL CONT CBL BRKT)	93	.....	1	25534835
17.	4-A28	3.425	CLIP, ACCEL CONT CBL (13.090)	93	F	1	20038997

RPO DEFINITIONS
L32 - ENGINE,3.4L,V6,(3.4S),SFI,OHV
MD8 - TRANSMISSION,AUTOMATIC 4-SPEED(THM700R4/4L60)
M28 - TRANSMISSION MAN, 6 SPD, BORG WARNER, 85MM, 3.36 1ST, 1.35 3RD
M29 - TRANSMISSION MAN, 6 SPD, BORG WARNER, 85MM, 2.97 1ST, 1.44 3RD
M49 - TRANSMISSION MAN 5 SPD, BORG WARNER, 77MM, 3.75 1ST, .76 5TH, O/D

cardiagn.com

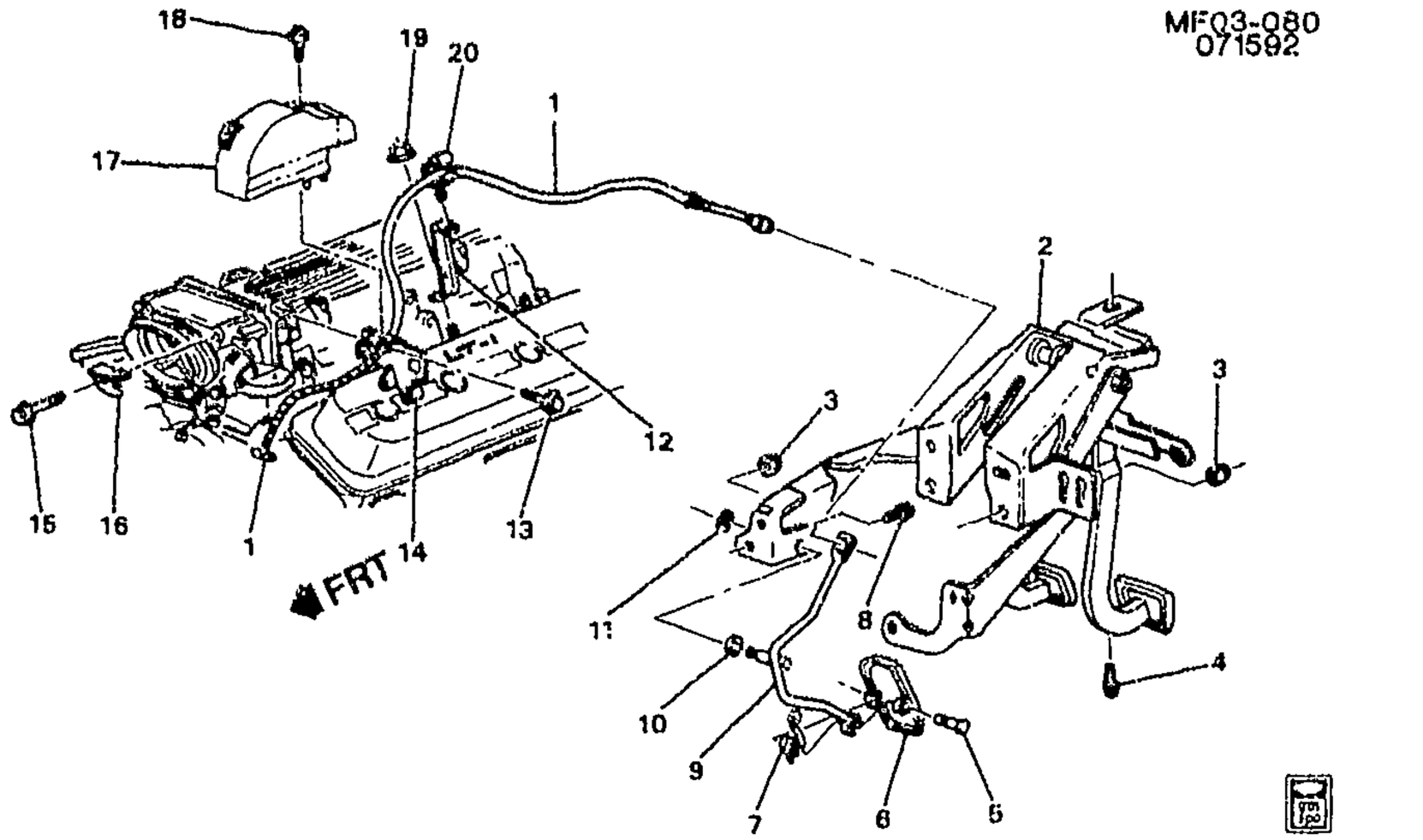

1993-1994 F ACCELERATOR CONTROL--V8
1995-1997 F ACCELERATOR CONTROL (LT1/5.7P EXC NW9)

1.	4-A28	3.430	CABLE, ACCEL CONT	93	F (LT1)	1	12550657
	4-A28	3.430	CABLE, ACCEL CONT	94	F (LT1)	1	12550676
	4-A28	3.430	CABLE, ACCEL CONT	95-96	F (LT1) (EXC NW9)	1	12550676
	4-A28	3.430	CABLE, ACCEL CONT	97	F (LT1) (EXC NW9)	1	12554652
2.	4-B2	3.451	PEDAL, BRK & ACCEL & CLU (W/BRKT) (INCLS 5-7, 9-11) (4.625)	93	F (M28)	1	10400399
	4-B2	3.451	PEDAL, BRK & ACCEL & CLU (W/BRKT) (INCLS 5-7, 9-11) (4.625)	93	F (M29)	1	10400399
	4-B2	3.451	PEDAL, BRK & ACCEL & CLU (W/BRKT) (INCLS 5-7, 9-11) (4.625)	93-97	F (M49)	1	10400399
	4-B2	3.451	PEDAL, BRK & ACCEL & CLU (W/BRKT) (INCLS 5-7, 9-11) (4.625)	94-97	F (MM6)	1	10400399
	4-N22	4.625	PEDAL, BRK & ACCEL (W/BRKT) (INCLS 5, 6, 7, 9, 10, 11)	93	F (MD8)	1	10400442
	4-B2	3.451	PEDAL, BRK & ACCEL (W/BRKT) (INCLS 5, 6, 7, 9, 10, 11) (4.625) .	93	F (MD8)	1	10400442
	4-N22	4.625	PEDAL, BRK & ACCEL (W/BRKT) (INCLS 5, 6, 7, 9, 10, 11)	94-97	F (M30)	1	10400442
	4-B2	3.451	PEDAL, BRK & ACCEL (W/BRKT) (INCLS 5, 6, 7, 9, 10, 11) (4.625) .	94-97	F (M30)	1	10400442
3.	4-N23	4.634	NUT, BRK PED (BRK PED) (HEX M8-1.25) (8.917)	93-96	F	2	11502811
	4-N23	4.634	NUT, BRK PED (BRK PED) (M8X1.25, 9THK, 17.6OD) (8.917)	97	F	5	11517031

cardiagn.com

4.		8.900	**BOLT-HEX**, M8X1.25X30, 22 THD, 24MM OD, 9.8, 7114M (BRK PED BRKT)	93-97		1	11516594
5.		N.S.	**PIN**, ACCEL PED PIV (PART OF 2)				
6.	4-B2	3.451	**PAD**, ACCEL PED (PART OF 2)	93-97	F	1	10254530
7.		N.S.	**SPRING**, ACCEL PED (PART OF 2)				
8.		8.900	**BOLT**, HFH M8X1.25X18 (BRK PED BRKT)	93-97		1	11513703
9.	4-B2	3.451	**PEDAL**, ACCEL (PART OF 2)	93-97	F	1	10254534
10.		N.S.	**WASHER**, ACCEL PED LVR (PART OF 2)				
11.		N.S.	**RETAINER**, ACCEL PED LVR (PART OF 2)				
12.	4-A14	3.162	**BRACKET**, ACCEL CONT CBL CLIP	93	F (LT1)	1	10150070
	4-A14	3.162	**BRACKET**, ACCEL CONT CBL CLIP	94-97	F (LT1)	1	12553052
13.		8.900	**BOLT**, M6X1X12, 10 THD, 11.6 OD, 9.8 GM500-M, POR, MACH (ACCEL CONT CBL BRKT) (AC-DELCO #11514149)	93-97		3	11514149
14.	4-B3	3.454	**BRACKET**, ACCEL CONT CBL	93	F (LT1)	1	10226089
	4-B3	3.454	**BRACKET**, ACCEL CONT CBL	94-97	F (LT1)	1	10192221
15.		8.900	**BOLT**, HFH M8X1.25X65 9.8 POR (THROT BODY)	93-97		4	11508083
16.	4-B4	3.469	**BRACKET**, ACCEL CONT CBL SPH SHLD	93-97	F (LT1)	1	10242904
17.	4-B4	3.469	**SHIELD**, ACCEL CONT CBL SPH	93-97	F (LT1)	1	10260166
18.		8.977	**BOLT-SCREW**, M4.2X1.41X13, 5.4 THD, 12.5 OD, GM6172M, GM6138M (ACCEL CONT CBL SPH SHLD)	93-97		1	15714277
19.		8.917	**NUT**, .375 16 HEX (ACCEL CONT CBL CLIP BRKT)	93-97		1	14057304
20.	4-A28	3.425	**CLIP**, ACCEL CONT CBL (13.090)	93-94	F	1	20038997
	4-A28	3.425	**CLIP**, ACCEL CONT CBL (13.090)	95-97	F (LT1)	1	20038997

RPO DEFINITIONS

LT1 – ENGINE-GAS, 8 CYL, 5.7L(5.7P),MFI,HO
MD8 – TRANSMISSION,AUTOMATIC 4-SPEED(THM700R4/4L60)
MM6 – TRANSMISSION MAN 6 SPD, BORG WARNER, 85MM, 1ST 2.66, 6TH 0.50, O/D
M28 – TRANSMISSION MAN, 6 SPD, BORG WARNER, 85MM, 3.36 1ST, 1.35 3RD
M29 – TRANSMISSION MAN, 6 SPD, BORG WARNER, 85MM, 2.97 1ST, 1.44 3RD
M30 – TRANSMISSION,AUTOMATIC 4 SPEED,4L60E,ELECTRONIC
M49 – TRANSMISSION MAN 5 SPD, BORG WARNER, 77MM, 3.75 1ST, .76 5TH, O/D
NW9 – TRACTION CONTROL ELECTRONIC

cardiagn.com

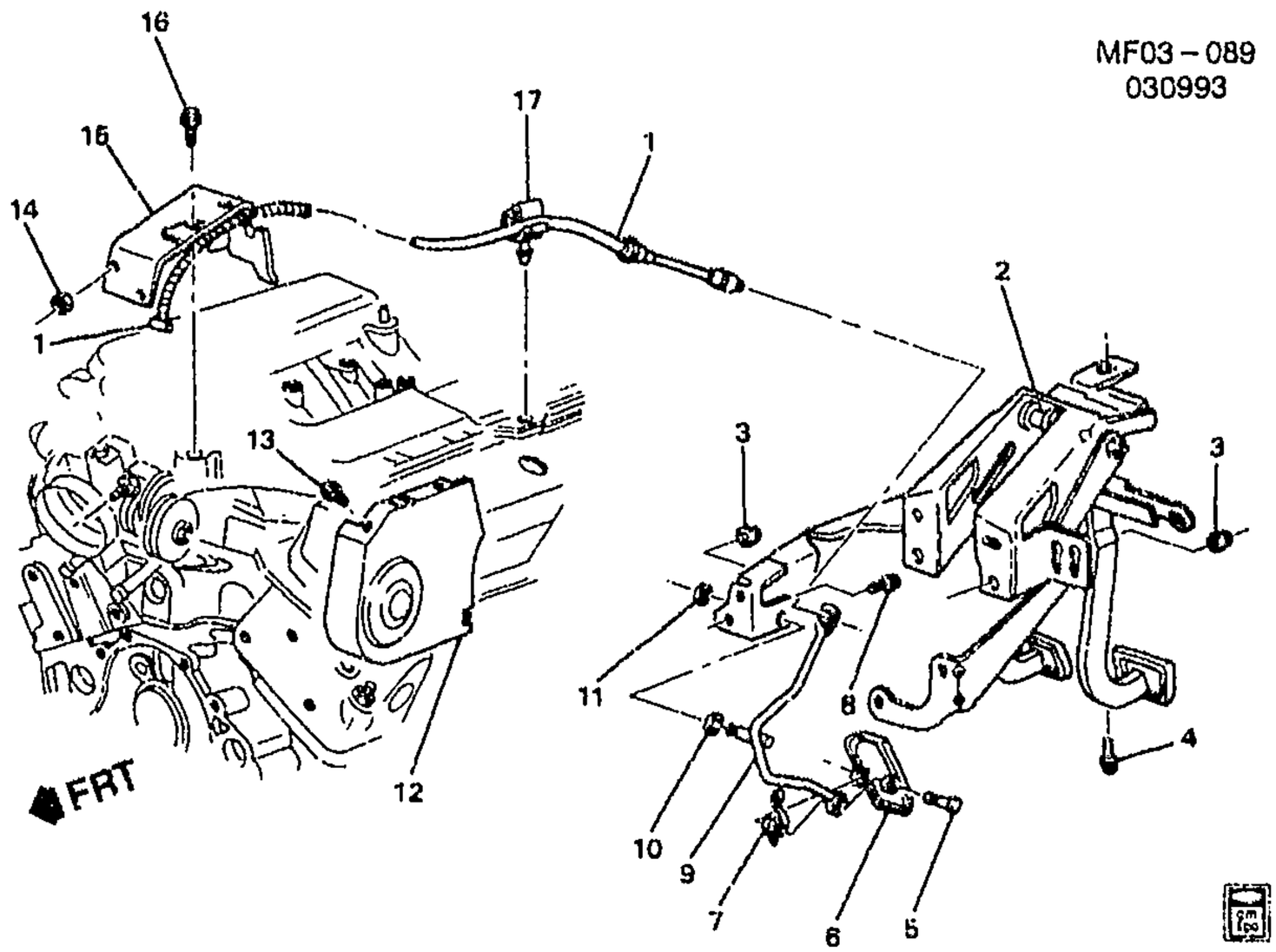

MF03–089

1994–1995 F ACCELERATOR CONTROL–V6 (L32/3.4S)

1.	4–A28	3.430	**CABLE**, ACCEL CONT	94–95	F (L32)	1	10233615
2.	4–B2	3.451	**PEDAL**, BRK & ACCEL & CLU (W/BRKT) (INCLS 5–7, 9–11) (4.625)	94–95	F (M49)	1	10400399
	4–B2	3.451	**PEDAL**, BRK & ACCEL & CLU (W/BRKT) (INCLS 5–7, 9–11) (4.625)	94–95	F (MM6)	1	10400399
	4–B2	3.451	**PEDAL**, BRK & ACCEL (W/BRKT) (INCLS 5, 6, 7, 9, 10, 11) (4.625)	94–95	F (M30)	1	10400442
3.		8.917	**NUT**, M8X1.25X7.1, ZC 10 (BRK PED)	94	F	5	11515748
		8.929	**WASHER**, M8X24X2.3 (BRK PED)	94	F	5	11500323
		8.917	**NUT**, HFH, M8X1.25X8.8, 17.9 OD, 10 DIN, PREV TORQUE (BRK PED)	95	F	5	11517031
4.		8.900	**BOLT–HEX**, M8X1.25X30, 22 THD, 24MM OD, 9.8, 7114M (BRK PED BRKT)	94–95		1	11516594
5.		N.S.	**PIN**, ACCEL PED PIV (PART OF 2)				
6.	4–B2	3.451	**PAD**, ACCEL PED (PART OF 2)	94–95	F	1	10254530
7.		N.S.	**SPRING**, ACCEL PED (PART OF 2)				
8.		8.900	**BOLT**, HFH M8X1.25X18 (BRK PED BRKT)	94–95	F	1	11513703
9.	4–B2	3.451	**PEDAL**, ACCEL (PART OF 2)	94–95	F	1	10254534
10.		N.S.	**WASHER**, ACCEL PED LVR (PART OF 2)				

cardiagn.com

11.		N.S.	RETAINER, ACCEL PED LVR (PART OF 2)					
12.	4-B4	3.469	SHIELD, ACCEL CONT CBL SPH	94-95	F (L32)		1	10174474
13.		8.977	BOLT-SCREW, M4.2X1.41X13, 5.4 THD, 12.5 OD, GM6172M, GM6138M (ACCEL CONT CBL SPH SHLD)	94-95	F		2	15714277
14.	4-B3	3.463	NUT, ACCEL CONT CBL BRKT (M8X1.25) (8.915) (AC-DELCO #11514596)	94-95	F87 (L32)		1	11514596
15.		DISCON	BRACKET, ACCEL CONT CBL	94-95	F (L32)		1	10215388
16.		8.900	BOLT, M8X1.25X14 (ACCEL CONT CBL BRKT)	94-95	F		1	25534835
17.	4-A28	3.425	CLIP, ACCEL CONT CBL (13.090)	94	F		1	20038997
	4-A28	3.425	CLIP, ACCEL CONT CBL (13.090)	95	F (L32)		1	20038997

RPO DEFINITIONS
L32 - ENGINE,3.4L,V6,(3.4S),SFI,OHV
MM6 - TRANSMISSION MAN 6 SPD, BORG WARNER, 85MM, 1ST 2.66, 6TH 0.50, O/D
M30 - TRANSMISSION,AUTOMATIC 4 SPEED,4L60E,ELECTRONIC
M49 - TRANSMISSION MAN 5 SPD, BORG WARNER, 77MM, 3.75 1ST, .76 5TH, O/D

cardiagn.com

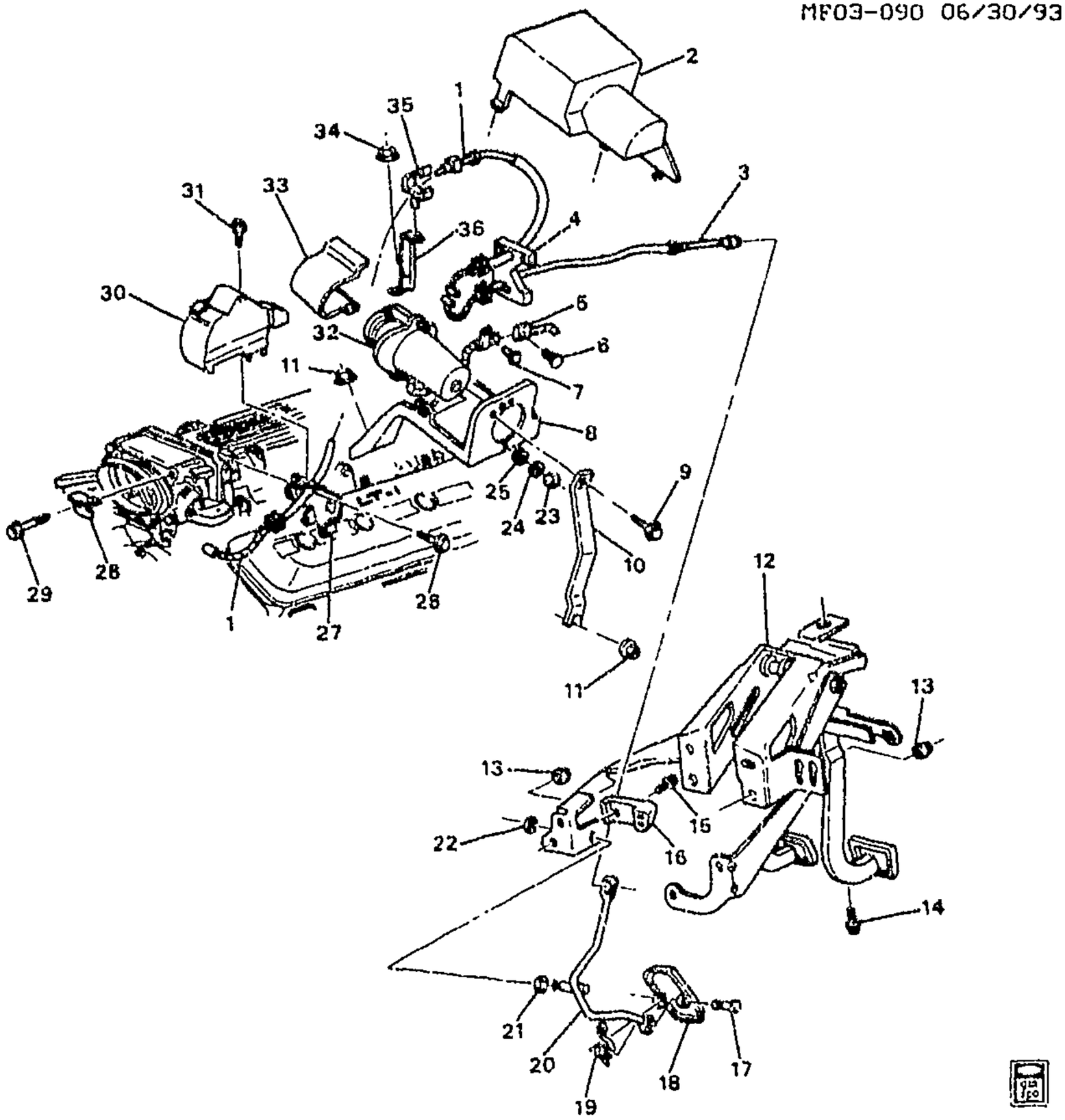

MF03-090

1995-1997 F ACCELERATOR CONTROL-V8 (LT1/5.7P)(NW9)

1.	4-A28	3.430	CABLE, THROT LVR	97	F (LT1, NW9)	1	12558642
	4-A28	3.430	CABLE, THROT LVR (BTWN THROT BODY & THROT RELAXER)	95-96	F (LT1, NW9)	1	10186850
2.	4-B3	3.454	COVER, ACCEL CONT & CRCONT SERVO CBL ADJR	95-97	F (LT1, NW9)	1	10211348
3.	4-A28	3.430	CABLE, ACCEL CONT	95-96	F (LT1, NW9) (EXC K34)	1	10228905
	4-A28	3.430	CABLE, ACCEL CONT (FROM THROT RELAXER TO ACCEL PED)	95	F (LT1, K34, NW9)	1	10186851
	4-A28	3.430	CABLE, ACCEL CONT (FROM THROT RELAXER TO ACCEL PED)	96-97	F (LT1, NW9)	1	10186851
4.	4-B4	3.469	SHIELD, ACCEL CONT CBL SPH	95-97	F (LT1)	1	10260166

cardiagn.com

5.	4-D10	3.820	**CONNECTOR**, MOT-THROT BODY IDLE SPD CONT ACTR (2-WAY F) (W/LEADS) (W/SEAL) (2.535) (AC-DELCO #PT247) ...	95-97	F (LT1)	1	12101855
6.	4-N20	2.559	**RETAINER**, FWD LP WRG HARN BRKT (14.683) (HOLDS THROT RELAXER CONN TO BRKT)	95-97	F (NW9)	1	20032850
7.	4-A28	3.425	**RETAINER**, ACCEL CONT & CRCONT SERVO CBL ADJR (BLACK) (PUSH IN W/SCREW) (6.3MM DIA X 23MM) (1.276)	95-97	F (LT1, NW9)	1	20664092
8.	4-B3	3.454	**BRACKET**, ACCEL CONT & CRCONT SERVO CBL ADJR	95-97	F (LT1, NW9)	1	10186862
9.		8.900	**BOLT**, HEX W/FL WA & NYLON WA M6X1X20 9.8 FBMS 1-46 STL WA 16 OD, NYL WA 24 OD (ACCEL CONT & CRCONT SERVO CBL ADJR BRKT BR)	95-97	F	1	20375021
10.	4-B3	3.454	**BRACE**, ACCEL CONT & CRCONT SERVO CBL ADJR BRKT	95-97	F (LT1, NW9)	1	10211347
11.		8.917	**NUT**, .375 16 HEX (ACCEL CONT & CRCONT SERVO CBL ADJR BRKT BR)	95-97	F	2	14057004
12.	4-B2	3.451	**PEDAL**, BRK & ACCEL (W/BRKT) (SEE BRAKE PEDAL & MASTER CYL MOUNTING ILLUSTRATION IN GRP. 4.000 FOR DETAILED VIEW) (INCLS 13, 17-22) (4.625)	95-97	F (M30)	1	10400442
	4-B2	3.451	**PEDAL**, BRK & ACCEL & CLU (W/BRKT) (SEE BRAKE PEDAL & MASTER CYL MOUNTING ILLUSTRATION IN GRP. 4.000 FOR DETAILED VIEW) (INCLS 13, 17-22) (4.625)	95-97	F (M49)	1	10400399
	4-B2	3.451	**PEDAL**, BRK & ACCEL & CLU (W/BRKT) (SEE BRAKE PEDAL & MASTER CYL MOUNTING ILLUSTRATION IN GRP. 4.000 FOR DETAILED VIEW) (INCLS 13, 17-22) (4.625)	95-97	F (MM6)	1	10400399
13.	4-N23	4.634	**NUT**, BRK PED (PART OF 12) (HEX M8-1.25) (8.917)	95-96	F	2	11502811
	4-N23	4.634	**NUT**, BRK PED (PART OF 12) (M8X1.25, 9THK, 17.6OD) (8.917)	97	F	5	11517031
14.		8.900	**BOLT-HEX**, M8X1.25X30, 22 THD, 24MM OD, 9.8, 7114M (BRK PED BRKT)	95-97	F	1	11516534
15.		8.900	**BOLT**, HEX W/FL WA, M8X1.25X30, 17 OD, 23.8GRIP, THD RLR, 6171M. PS (BRK PED BRKT)	95-97	F	1	11509509
16.	4-B2	3.451	**STOP** ACCEL PED	95-97	F (LT1, NW9)	1	12555158
17.		N.S.	**PIN**, ACCEL PED PIV (PART OF 12)		.....		
18.	4-B2	3.451	**PAD**, ACCEL PED (PART OF 12) .	95-97	F	1	10254530
19.		N.S.	**SPRING**, ACCEL PED (PART OF 12)		.....		

cardiagn.com

20.	4-B2	3.451	**PEDAL**, ACCEL (PART OF 12)	95-97	F	1	10254534
21.		N.S.	**WASHER**, ACCEL PED LVR (PART OF 12)				
22.		N.S.	**RETAINER**, ACCEL PED LVR (PART OF 12)				
23.		8.917	**NUT**, HFH M6X1X6.5 ZOR 9 (ACCEL CONT & CRCONT SERVO CBL ADJR BRKT)	95-97	F	2	3530297
24.	4-B3	3.454	**BUSHING**, ACCEL CONT & CRCONT SERVO CBL ADJR BRKT INSL	95-97	F (LT1, NW9)	2	10178793
25.	4-B3	3.454	**INSULATOR**, ACCEL CONT & CRCONT SERVO CBL ADJR BRKT	95-97	F (LT1, NW9)	1	12551356
26.		8.900	**BOLT**, M6X1X12, 10 THD, 11.6 OD, 9.8 GM500--M, POR, MACH (ACCEL CONT CBL BRKT) (AC-DELCO #11514149)	95-97	F	3	11514149
27.	4-B3	3.454	**BRACKET**, ACCEL CONT CBL	95-97	F (LT1)	1	10192221
28.	4-B4	3.469	**BRACKET**, ACCEL CONT CBL SPH SHLD	95-97	F (LT1)	1	10242904
29.		8.900	**BOLT**, HFH M8X1.25X65 9.8 POR (THROT BODY)	95-97	F	4	11508083
30.	4--B4	3.469	**SHIELD**, ACCEL CONT CBL SPH	95-97	F (LT1)	1	10260166
31.		8.977	**BOLT--SCREW**, M4.2X1.41X13, 5.4 THD, 12.5 OD, GM6172M, GM6138M (ACCEL CONT CBL SPH SHLD)	95-97	F	1	15714277
32.	4-B3	3.454	**ADJUSTER**, ACCEL CONT & CRCONT SERVO CBL (INCLS 33)	95-97	F (NW9)	1	12557971
33.		N.S.	**SHIELD**, ACCEL CONT & CRCONT SERVO CBL ADJR (PART OF 32)				
34.		8.917	**NUT**, .375 16 HEX (ACCEL CONT CBL CLIP BRKT)	95-97	F	1	14057004
35.	4-A28	3.425	**CLIP**, ACCEL CONT CBL (13.090)	95-97	F (LT1)	1	20038997
36.	4-A14	3.162	**BRACKET**, ACCEL CONT CBL CLIP	95-97	F (LT1)	1	12553052

RPO DEFINITIONS

K34 - CRUISE CONTROL,AUTOMATIC,ELECTRONIC
LT1 - ENGINE-GAS, 8 CYL, 5.7L(5.7P),MFI,HO
MM6 - TRANSMISSION MAN 6 SPD, BORG WARNER, 85MM, 1ST 2.66, 6TH 0.50, O/D
M30 - TRANSMISSION,AUTOMATIC 4 SPEED,4L60E,ELECTRONIC
M49 - TRANSMISSION MAN 5 SPD, BORG WARNER, 77MM, 3.75 1ST, .76 5TH, O/D
NW9 - TRACTION CONTROL ELECTRONIC

cardiagn.com

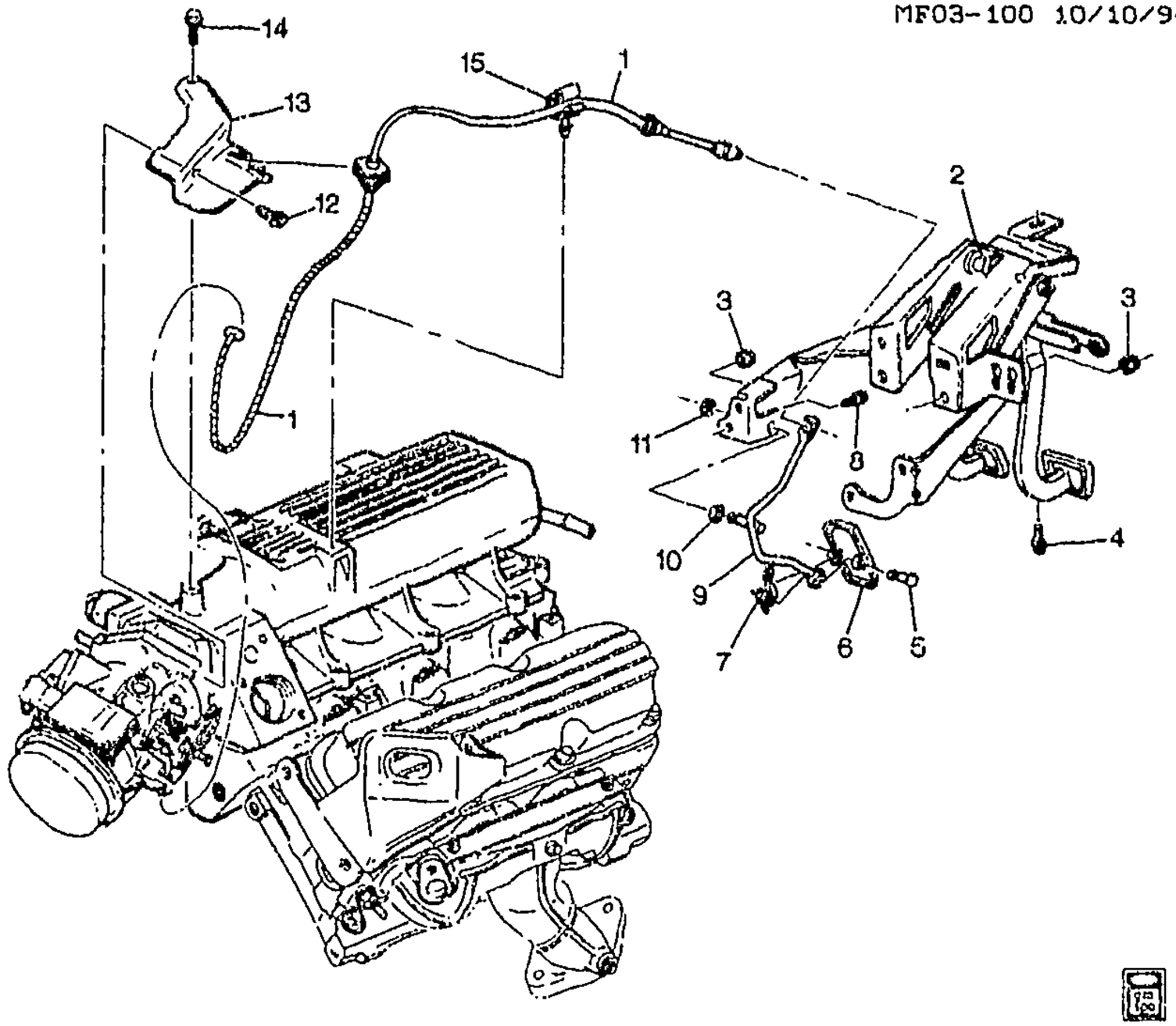

1995-1998 F ACCELERATOR CONTROL-V6 (L36/3.8K)

1.	4-A28	3.430	CABLE, ACCEL CONT	95-98	F (L36, M30)	1	12557565
	4-A28	3.430	CABLE, ACCEL CONT	96-98	F (L36, M49)	1	12556795
2.	4-B2	3.451	PEDAL, BRK & ACCEL (W/BRKT) (INCLS 5-7, 9-11) (4.625)	95-98	F (M30)	1	10400442
	4-N22	4.625	PEDAL, BRK & ACCEL & CLU (W/BRKT) (INCLS 5-7, 9-11) ...	95-97	F (M49)	1	10400399
	4-N22	4.625	PEDAL, BRK & ACCEL & CLU (W/BRKT) (INCLS 5-7, 9-11) ...	95-97	F (MM6)	1	10400399
	4-N6 4-N6	0.830	PEDAL, BRK & ACCEL & CLU (W/BRKT) (INCLS 5-7, 9-11) (4.625)	95-97	F (MM6)	1	10400399
	4-N6 4-N6	0.830	PEDAL, BRK & ACCEL & CLU (W/BRKT) (INCLS 5-7, 9-11) (4.625)	95-97	F (M49)	1	10400399
	4-N22	4.625	PEDAL, BRK & ACCEL & CLU (W/BRKT) (INCLS 5-7, 9-11) (INCLUDES PAD, ARM, PEDAL, SPRING, PIN, NUT, BUSHING, RETAINER)	98	F (MM6)	1	10400451

cardiagn.com

	4-N22	4.625	PEDAL, BRK & ACCEL & CLU (W/BRKT) (INCLS 5-7, 9-11) (INCLUDES PAD, ARM, PEDAL, SPRING, PIN, NUT, BUSHING, RETAINER)	98	F (M49)	1	10400451
	4-N6 4-N6	0.830	PEDAL, BRK & ACCEL & CLU (W/BRKT) (INCLS 5-7, 9-11) (INCLUDES PAD, ARM, PEDAL, SPRING, PIN, NUT, BUSHING, RETAINER) (4.625)	98	F (MM6)	1	10400451
	4-N6 4-N6	0.830	PEDAL, BRK & ACCEL & CLU (W/BRKT) (INCLS 5-7, 9-11) (INCLUDES PAD, ARM, PEDAL, SPRING, PIN, NUT, BUSHING, RETAINER) (4.625)	98	F (M49)	1	10400451
	4-N6 4-N6	0.831	BUSHING, CLU PED	95-98	F (MM6)	2	10278875
	4-N6 4-N6	0.831	BUSHING, CLU PED	95-98	F (M49)	2	10278875
	4-N6 4-N6	0.831	BUSHING, CLU PED RTN SPR ..	95-98	F (M49, MM6)	1	10278876
3.	4-N23	4.634	NUT, BRK PED (HEX M8-1.25) (8.917)	95-96	F	2	11502811
	4-N23	4.634	NUT, BRK PED (M8X1.25, 9THK, 17.6OD) (8.917)	97-98	F	5	11517031
4.		8.900	BOLT-HEX, M8X1.25X30, 22 THD, 24MM OD, 9.8, 7114M (BRK PED BRKT)	95-98	F	1	11516594
5.		N.S.	PIN, ACCEL PED PIV (PART OF 2)		.....		
6.	4-B2	3.451	PAD, ACCEL PED (PART OF 2) ..	95-98	F	1	10254530
7.		N.S.	SPRING, ACCEL PED (PART OF 2)		.....		
8.		8.977	SCREW, HEX W/FL WA, M8X1.25X20, PO (BRK PED BRKT)	95-98	F	1	11515358
9.	4-B2	3.451	PEDAL, ACCEL (PART OF 2)	95-98	F	1	10254534
10.		N.S.	WASHER, ACCEL PED LVR (PART OF 2)		.....		
11.		N.S.	RETAINER, ACCEL PED LVR (PART OF 2)		.....		
12.	4-B3	3.463	BOLT, ACCEL CONT CBL BRKT (TO THROTTLE BODY) (M6X16) (9.8 7114M) (8.900)	95-98	F (L36)	2	11516398
13.	4-B3	3.454	BRACKET, ACCEL CONT CBL (A/TRANS TO THROT BODY)	95-98	F (L36, M30)	1	24505490
	4-B3	3.454	BRACKET, ACCEL CONT CBL (M/TRANS TO THROTTLE BODY)	95-98	F (L36, M49)	1	24505491
14.	4-B3	3.463	BOLT, ACCEL CONT CBL BRKT (TO THROTTLE BODY) (M6X16) (9.8 7114M) (8.900)	95-98	F (L36)	2	11516398
15.	4-A28	3.425	CLIP, ACCEL CONT CBL	95-98	F (L36)	1	12555983

RPO DEFINITIONS
L36 - ENGINE GAS, 6 CYL, 3.8K, MFI, V6, HO (ERV6 SERIES)
MM6 - TRANSMISSION MAN 6 SPD, BORG WARNER, 85MM, 1ST 2.66, 6TH 0.50, O/D
M30 - TRANSMISSION,AUTOMATIC 4 SPEED,4L60E,ELECTRONIC
M49 - TRANSMISSION MAN 5 SPD, BORG WARNER, 77MM, 3.75 1ST, .76 5TH, O/D

cardiagn.com

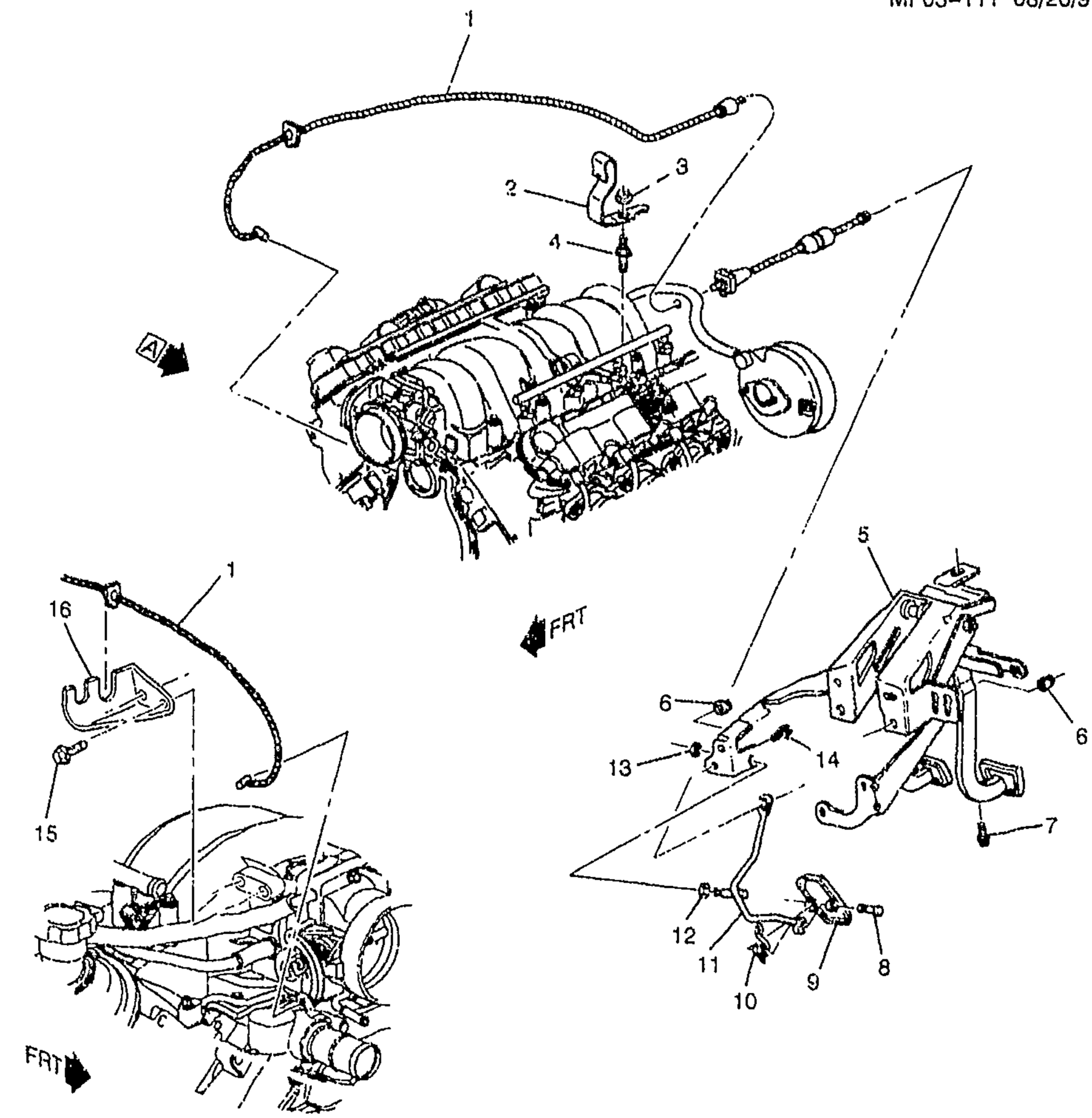

VIEW A

MF03-111

1998-2002 F ACCELERATOR CONTROL-V8 (LS1/5.7G)(EXC NW9)

1.	4-A28	3.430	CABLE, ACCEL CONT	98-99	F (LS1) (EXC NW9)	1	12565559
	4-A28	3.430	CABLE, ACCEL CONT	00-02	F (LS1) (EXC NW9)	1	12565560
2.	4-B3	3.454	BRACKET, ACCEL CONT CBL & CRCONT SERVO	98-02	F (LS1)	1	12552865
	4-D12	3.885	BRACKET, ACCEL CONT CBL & CRCONT SERVO (3.454)	99-02	F (LS1)	1	12552865

cardiagn.com

3.		8.917	NUT, HFH M6X1X6.5 ZOR 9 (ACCEL CONT CBL BRKT)	98-02	F	1	3530297
4.	4-A20	3.330	STUD, F/INJN FUEL RL (HFH 6X1X18.5X14 W/ADH, 6X1X14, 39.1 OAL, 14.2 OD, 9.8, 7114M) (AC-DELCO #12554211)	98-02	F (LS1)	4	12554211
5.	4-N22	4.625	PEDAL, BRK & ACCEL (W/BRKT) (SEE BRAKE PEDAL & MASTER CYL MOUNTING ILLUSTRATION IN GRP. 4.000 FOR DETAILED VIEW) (INCLS 6, 8-13)	98	F (M30)	1	10400442
	4-B2	3.451	PEDAL, BRK & ACCEL (W/BRKT) (SEE BRAKE PEDAL & MASTER CYL MOUNTING ILLUSTRATION IN GRP. 4.000 FOR DETAILED VIEW) (INCLS 6, 8-13) (4.625) ..	98	F (M30)	1	10400442
	4-N22	4.625	PEDAL, BRK & ACCEL (W/BRKT) (SEE BRAKE PEDAL & MASTER CYL MOUNTING ILLUSTRATION IN GRP. 4.000 FOR DETAILED VIEW) (INCLS 6, 8-13)	99-02	F (LS1, M30)	1	10400442
	4-B2	3.451	PEDAL, BRK & ACCEL (W/BRKT) (SEE BRAKE PEDAL & MASTER CYL MOUNTING ILLUSTRATION IN GRP. 4.000 FOR DETAILED VIEW) (INCLS 6, 8-13) (4.625) ..	09-02	F (LS1, M30)	1	10400442
6.	4-N23	4.634	NUT, BRK PED (PART OF 5) (M8X1.25, 9THK, 17.6OD) (8.917)	98-02	F	5	11517031
7.		8.900	BOLT-HEX, M8X1.25X30, 22 THD, 24MM OD, 9.8, 7114M (BRK PED BRKT)	98-02	F	1	11516594
8.		N.S.	PIN, ACCEL PED PIV (PART OF 5)		.....		
9.	4-B2	3.451	PAD, ACCEL PED (PART OF 5) ..	98-02	F	1	10254530
10.		N.S.	SPRING, ACCEL PED (PART OF 5)		.....		
11.	4-B2	3.451	PEDAL, ACCEL (PART OF 5)	98	F	1	10254534
	4-B2	3.451	PEDAL, ACCEL (PART OF 5)	99-02	F (LS1)	1	10254534
12.		N.S.	WASHER, ACCEL PED LVR (PART OF 5)		.....		
13.		N.S.	RETAINER, ACCEL PED LVR (PART OF 5)		.....		
14.		8.900	BOLT, HEX W/FL WA, M8X1.25X30, 17 OD, 23.8GRIP, THD RLR, 6171M, PS (BRK PED BRKT)	98-02	F	1	11509509
15.		8.900	BOLT/SCREW, HFH M6X1X20, 9.8, 7114M, DOG PT, 14.2 OD (ACCEL CONT CBL BRKT)	98-02	F	AR	11516398
16.	4-B3	3.454	BRACKET, ACCEL CONT CBL ...	98-02	F (LS1)	1	12552278

RPO DEFINITIONS
LS1 - ENGINE GAS, 8 CYL, 5.7L, SFI, ALUMINUM ENGINE
M30 - TRANSMISSION,AUTOMATIC 4 SPEED,4L60E,ELECTRONIC
NW9 - TRACTION CONTROL ELECTRONIC

cardiagn.com

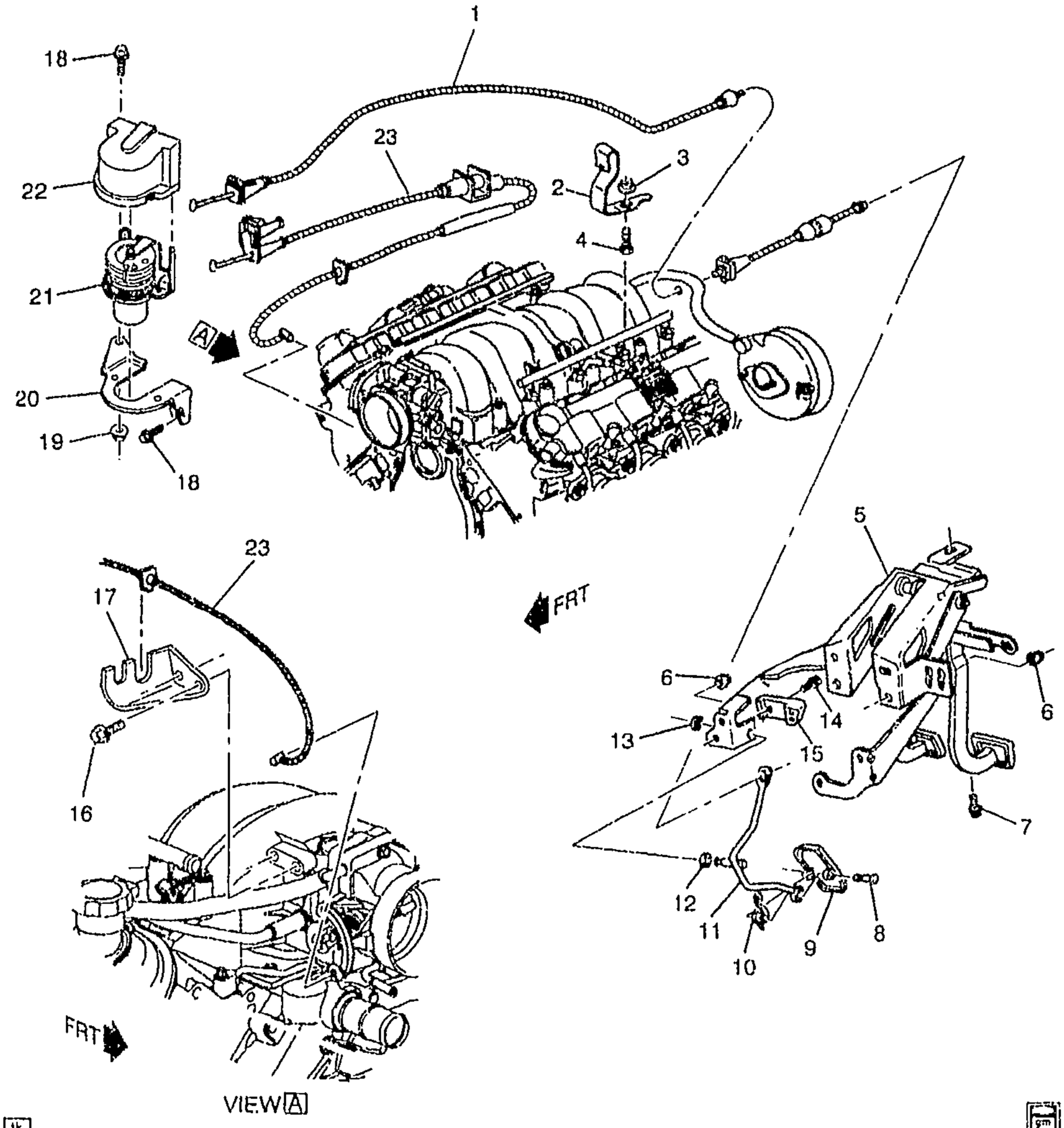

MF03-112

1998-2002 F ACCELERATOR CONTROL-V8 (LS1/5.7G)(NW9)

1.	4-A28	3.430	CABLE, ACCEL CONT	98-99	F (LS1, NW9)	1	12552267
	4-A28	3.430	CABLE, ACCEL CONT	00-02	F (LS1, NW9)	1	12563651
2.	4-B3	3.454	BRACKET, ACCEL CONT CBL & CRCONT SERVO	98-02	F (LS1)	1	12552865
	4-D12	3.885	BRACKET, ACCEL. CONT CBL & CRCONT SERVO (3.454)	99-02	F (LS1)	1	12552865
3.		8.917	NUT, HFH M6X1X6.5 ZOR 9 (ACCEL CONT CBL BRKT)	98-02	F	1	3530297

cardiagn.com

4.	4-A20	3.330	STUD, F/INJN FUEL RL (HFH 6X1X18.5X14 W/ADH, 6X1X14, 39.1 OAL, 14.2 OD, 9.8, 7114M) (AC-DELCO #12554211)	98-02	F (LS1)	4	12554211
5.	4-N22	4.625	PEDAL, BRK & ACCEL (W/BRKT) (SEE BRAKE PEDAL & MASTER CYL MOUNTING ILLUSTRATION IN GRP. 4.000 FOR DETAILED VIEW) (INCLS 6, 8-13)		.....		10400442
	4-N22	4.625	PEDAL, BRK & ACCEL & CLU (W/BRKT) (SEE BRAKE PEDAL & MASTER CYL MOUNTING ILLUSTRATION IN GRP. 4.000 FOR DETAILED VIEW) (INCLS 6, 8-13) (INCLUDES PAD, ARM, PEDAL, SPRING, PIN, NUT, BUSHING, RETAINER)		.....		10400451
6.	4-N23	4.634	NUT, BRK PED (PART OF 5) (M8X1.25, 9THK, 17.6OD) (8.917)	98-02	F	5	11517031
7.		8.900	BOLT-HEX, M8X1.25X30, 22 THD, 24MM OD, 9.8, 7114M (BRK PED BRKT)	98-02	F	1	11516594
8.		N.S.	PIN, ACCEL PED PIV (PART OF 5)		.....		
9.	4-B2	3.451	PAD, ACCEL PED (PART OF 5) ..	98-02	F	1	10254530
10.		N.S.	SPRING, ACCEL PED (PART OF 5)		.....		
11.	4-B2	3 451	PEDAL, ACCEL (PART OF 5)	98	F	1	10254534
	4-B2	3.451	PEDAL, ACCEL (PART OF 5)	99-02	F (LS1)	1	10254534
12.		N.S.	WASHER, ACCEL PED LVR (PART OF 5)		.....		
13.		N.S.	RETAINER, ACCEL PED LVR (PART OF 5)		....		
14.		8.900	BOLT, HEX W/FL WA, M8X1.25X30, 17 OD, 23.8GRIP, THD RLR, 6171M, PS (BRK PED BRKT)	98-02	F	1	11509509
15.	4-B2	3.451	STOP, ACCEL PED	98-02	F (LS1, NW9)	1	12555159
16.		8.900	BOLT/SCREW, HFH M6X1X20, 9.8, 7114M, DOG PT, 14.2 OD (ACCEL CONT CBL BRKT)	98-02	.....	AR	11516398
17.	4-B3	3.454	BRACKET, ACCEL CONT CBL ...	98-02	F (LS1)	1	12552278
18.		8.977	BOLT, HWH, M8X1.25X21, THD FORMING, POR (ACCEL CONT & CRCONT SERVO CBL ADJR BRKT)	98-02	.....	2	11516671
19.		8.917	NUT, HFH M6X1X6.5 ZOR 9 (ACCEL CONT & CRCONT SERVO CBL ADJR)	98-02	F	2	3530297
20.	4-B3	3.454	BRACKET, ACCEL CONT & CRCONT SERVO CBL ADJR	98-02	F (LS1, NW9)	1	12552273
	4-D11	3.880	BRACKET, ACCEL CONT & CRCONT SERVO CBL ADJR (3.454)	98-02	F (LS1, NW9)	1	12552273
21.	4-D11	3.880	ADJUSTER, ACCEL CONT & CRCONT SERVO CBL (INCLS 22) (3.454)	96-99	F (LS1, NW9)	1	12557351

cardiagn.com

	4-B3	3.454	ADJUSTER, ACCEL CONT & CRCONT SERVO CBL (INCLS 22)	00-02	F (LS1, NW9)	1	12563338
	4-D11	3.880	ADJUSTER, ACCEL CONT & CRCONT SERVO CBL (INCLS 22) (3.454)	02	F (LS1, NW9)	1	12563338
22.		N.S.	COVER, ACCEL CONT & CRCONT SERVO CBL ADJR (PART OF 21)		.....		
23.	4-A28	3.430	CABLE, THROT LVR	98-99	F (LS1, NW9)	1	12563242
	4-A28	3.430	CABLE, THROT LVR	00-02	F (LS1, NW9)	1	12563339

RPO DEFINITIONS
LS1 – ENGINE GAS, 8 CYL, 5.7L, SFI, ALUMINUM ENGINE
NW9 – TRACTION CONTROL ELECTRONIC

cardiagn.com

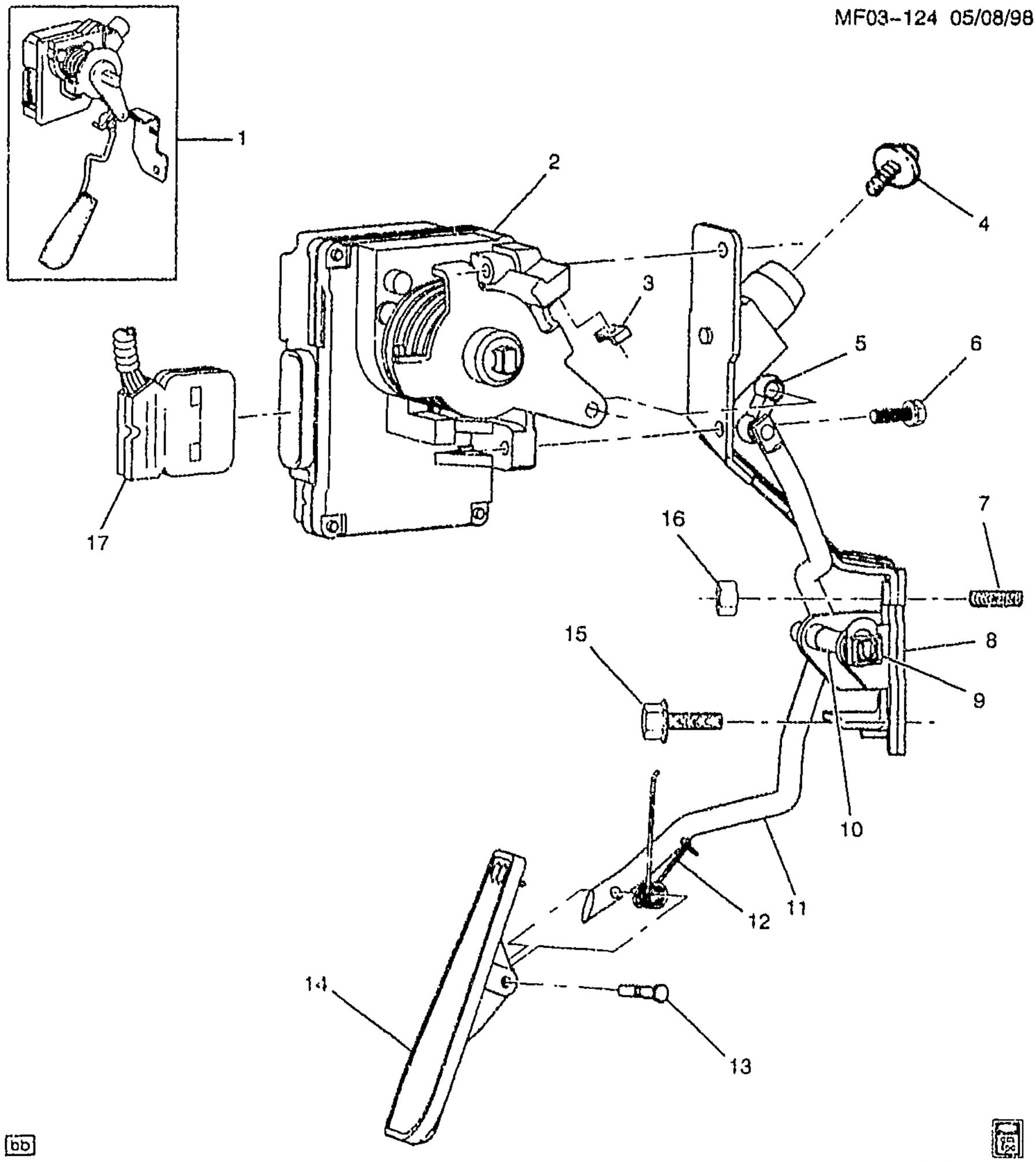

bb

MF03-124

1999-2002 F ACCELERATOR CONTROL-V6 (L36/3.8K)

1.	4-B2	3.451	PEDAL, ACCEL (W/MDL & POSN SEN) (INCLS 2, 3, 5, 6, 8-14) (INCLUDES BRACKET & PAD) ...	99-02	F (L36)	1 24506358
2.		N.S.	MODULE, ACCEL PED (PART OF 1)		.....	
3.	4-B2	3.451	PAD, ACCEL PED STOP (PART OF 1)	99-02	F (L36)	1 24508124

cardiagn.com

4.	4-B2	3.452	BOLT, ACCEL PED SUPT	99-02	F (L36)	1	24507566
5.		N.S.	LINK, NYLON (PART OF 1, 8)		.....		
6.	4-B2	3.452	BOLT, ACCEL PED BRKT (PART OF 1) (17.070)	99-02	F	2	15683577
7.		N.S.	STUD, ENG COMPT		.....		
8.	4-B2	3.452	BRACKET, ACCEL PED (PART OF 1) (INCLS 5, 9-11) (3.451) ...	99-02	F (L36)	1	24506357
9.		N.S.	CLIP, RETAINER (PART OF 1, 8) .		.....		
10.		N.S.	BUSHING, NYLON (PART OF 1, 8)		.....		
11.		N.S.	ROD, ACCEL PED (PART OF 1, 8)		.....		
12.	4-B3	3.459	SPRING, ACCEL PED (PART OF 1)	99-02	F (L36)	1	368077
13.	4-B2	3.452	PIN, ACCEL PED PIV (PART OF 1)	99-02	F (L36)	1	368078
14.	4-B2	3.451	PAD, ACCEL PED (PART OF 1) ..	99-02	F	1	10254530
15.		8.977	SCREW, HEX SER WA HD TAP M8-1.25X20 (ACCEL PED SUPT)	99-02	F	1	11501812
16.		8.917	NUT, HFH, M8X1.25X8.8, 17.9 OD, 10 DIN, PREV TORQUE (ACCEL PED BRKT)	99-02	F	1	11517031
17.	4-C12	3.670	CONNECTOR, MDL-THROT ACTR CONT (24-WAY F) (INCLS CONN, SEAL, RETAINER, TERMINALS & STRAIN RELIEF) (4.720) (AC-DELCO #15306089)	99-02	F (L36)	1	15306089

RPO DEFINITIONS

L36 -- ENGINE GAS, 6 CYL, 3.8K, MFI, V6, HO (ERV6 SERIES)

cardiagn.com

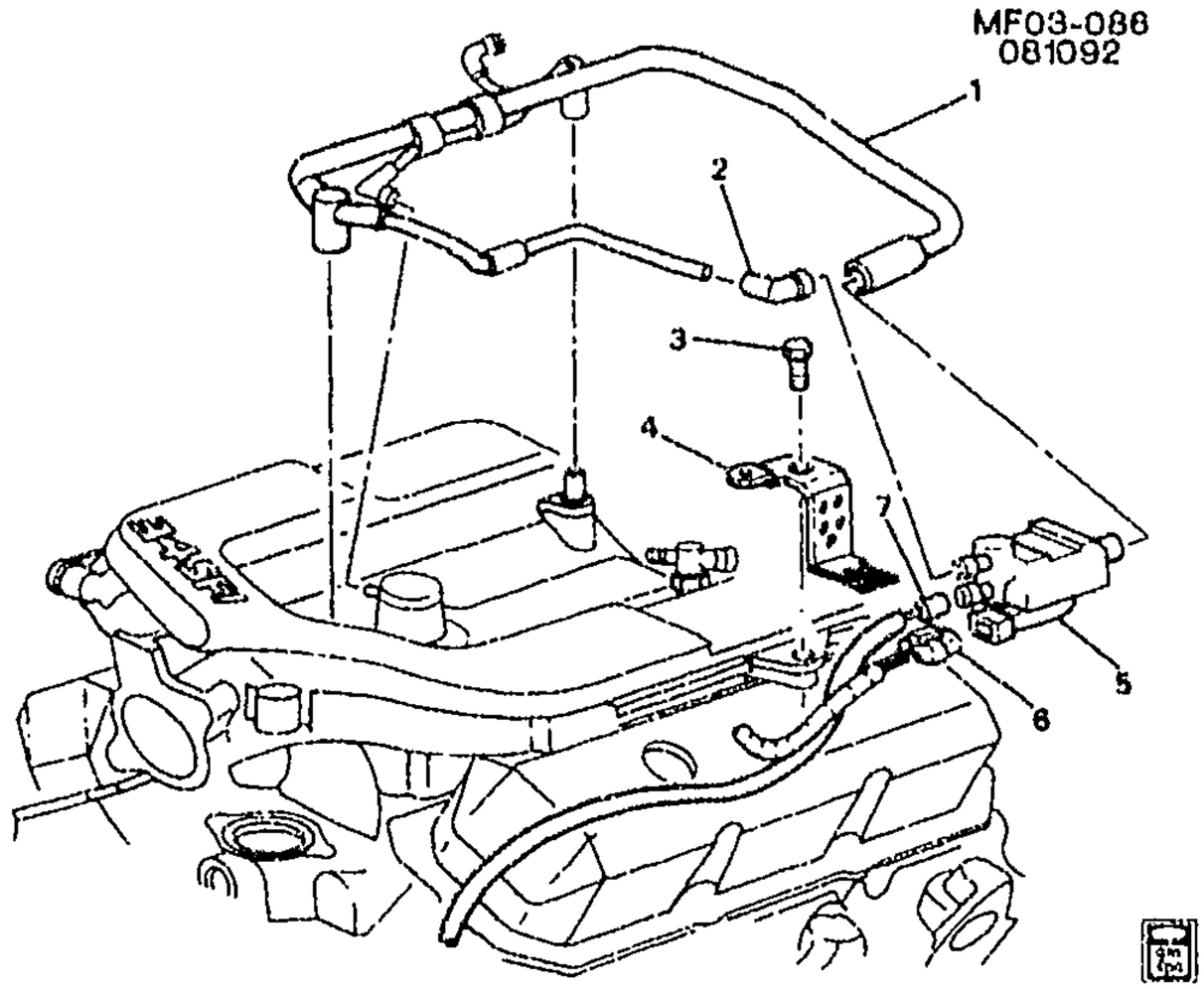

MF03-086

1993-1995 F VAPOR CANISTER LINES & VALVE (L32/3.4S)

1.	4-N7	1.745	HARNESS, PCV VLV (INCLS 2) ..	93-95	F (L32)	1	10217828
2.	4-N7	1.745	CONNECTOR, PCV VLV HOSE (PART OF 1) (90 DEG ELBOW) (3.145)	93-95	F (L32)	1	14091622
3.	4-A11	3.130	BOLT, EVAP EMIS CNSTR PURGE SOL VLV BRKT (HFH M6X1X20 9.8 PZOR) (8.900) (AC-DELCO #11508600)	93-95	F (L32)	1	11508600
	4-A11	3.130	BOLT, EVAP EMIS CNSTR PURGE SOL VLV BRKT (M6X1X20, 19THD, 14.2OD) (8.900) (AC-DELCO #11517518)	93-95	F (L32)	1	11517518
4.	4-A11	3.130	BRACKET, EVAP EMIS CNSTR PURGE SOL VLV	93-95	F (L32)	1	10473187
5.	4-A11	3.130	VALVE, EVAP EMIS CNSTR PURGE SOL (2 PORT VAC, 2 BLADE TERM) (AC-DELCO #214-565)	93-95	F (L32)	1	1997201
6.		8.965	CONNECTOR (FUEL VPR CNSTR PURGE SOL VLV) (2.535) (AC-DELCO #PT250)	93-95	F	1	12101858
7.	4-A15	3.163	PIPE, FUEL FEED & RTN (SEE FUEL SUPPLY SYSTEM ILLUSTRATION IN GRP. 3.000 FOR DETAILED VIEW.)	93-95	F87	1	10268081
	4-A15	3.163	PIPE, FUEL FEED & RTN (SEE FUEL SUPPLY SYSTEM ILLUSTRATION IN GRP. 3.000 FOR DETAILED VIEW.)	94-95	F67	1	10268082

RPO DEFINITIONS
L32 - ENGINE,3.4L,V6,(3.4S),SFI,OHV

cardiagn.com

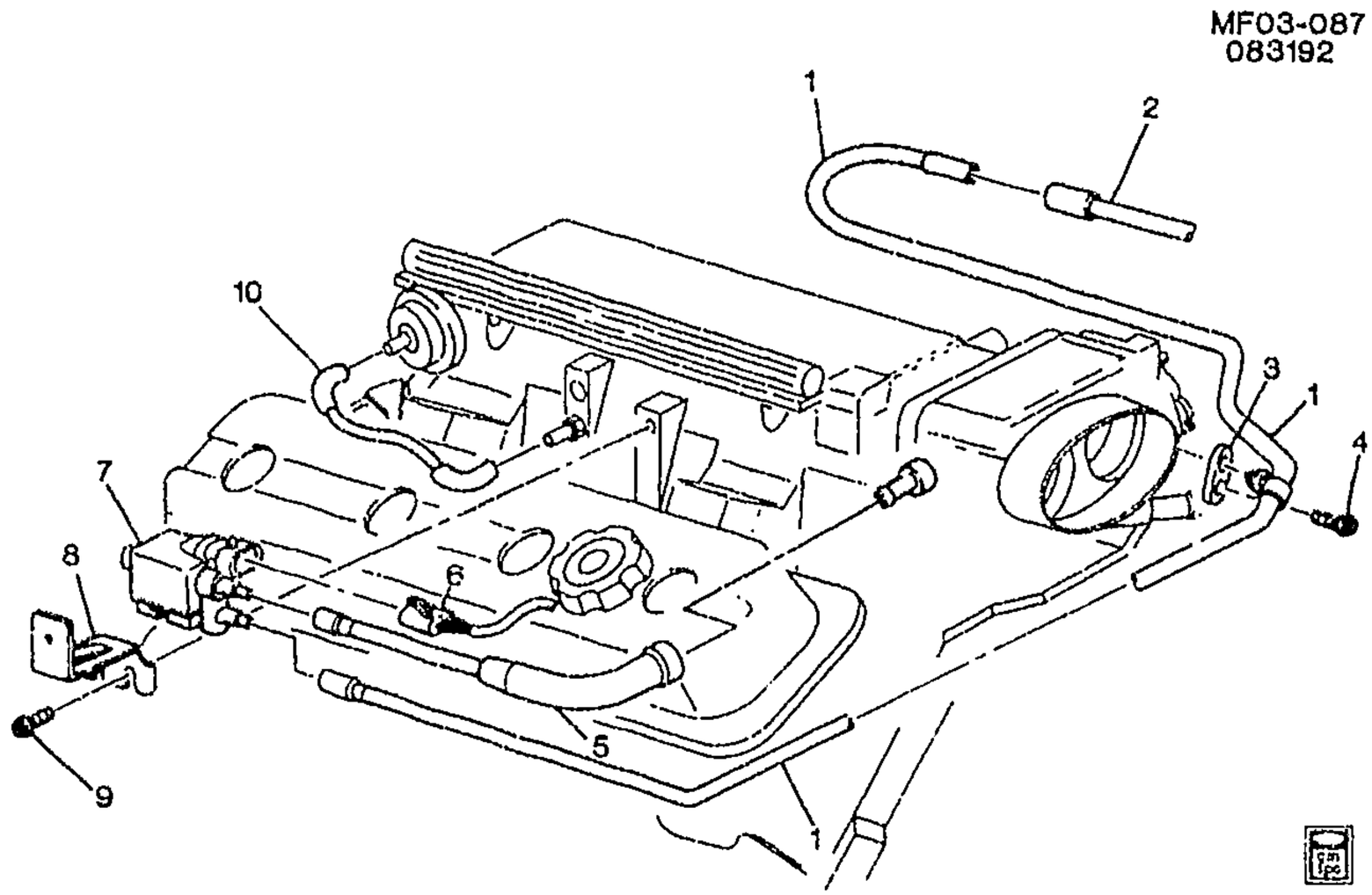

MF03-087

1993-1995 F VAPOR CANISTER LINES & VALVE (LT1/5.7P)

1.	4-A12	3.145	TUBE, EVAP EMIS CNSTR PURGE	93	F (LT1)	1	10105311
	4-A12	3.145	TUBE, EVAP EMIS CNSTR PURGE	94-95	F (LT1)	1	10228934
2.	4-A15	3.163	PIPE, FUEL FEED & RTN (SEE FUEL SUPPLY SYSTEM ILLUSTRATION IN GRP. 3.000 FOR DETAILED VIEW.)	93	F87	1	10268081
	4-A15	3.163	PIPE, FUEL FEED & RTN (SEE FUEL SUPPLY SYSTEM ILLUSTRATION IN GRP. 3.000 FOR DETAILED VIEW.)	94-95	F67 (LT1)	1	10258442
	4-A15	3.163	PIPE, FUEL FEED & RTN (SEE FUEL SUPPLY SYSTEM ILLUSTRATION IN GRP. 3.000 FOR DETAILED VIEW.)	94-95	F87 (LT1)	1	10258441
3.	4-A12	3.145	RETAINER, EVAP EMIS CNSTR PURGE TUBE	93-95	F (LT1)	1	10186192
4.		8.900	BOLT, HEX 3/8-16 X 3/4 PH, 300M STL (IGN COIL)	93-95		1	9424338
5.	4-A12	3.145	PIPE, EVAP EMIS CNSTR PURGE SOL VLV	93-95	F (LT1)	1	10105324
6.		8.965	CONNECTOR (SOL-EVAP EMIS CNSTR PURGE VLV) (2.535) (AC-DELCO #PT250)	93-95	F	1	12101858
7.	4-A11	3.130	VALVE, EVAP EMIS CNSTR PURGE SOL (2 PORT VAC, 2 BLADE TERM) (AC-DELCO #214-565)	93-95	F (LT1)	1	1997201

cardiagn.com

8.	4-A11	3.130	BRACKET, EVAP EMIS CNSTR PURGE SOL VLV	93-95	F (LT1)	1	10229207
9.		8.900	BOLT, HFH, M5X.8X10, 8.8 THD, 11.4 OD, 9.8, PO (EVAP EMIS CNSTR PURGE SOL VLV BRKT) .	93-95	.....	1	11514607
10.	4-A20	3.330	TUBE, FUEL PRESS REG VAC ..	93	F (LT1)	1	10105322
	4-A20	3.330	TUBE, FUEL PRESS REG VAC ..	94-95	F (LT1)	1	10216948

RPO DEFINITIONS

LT1 -- ENGINE-GAS, 8 CYL., 5.7L(5.7P),MFI,HO

cardiagn.com

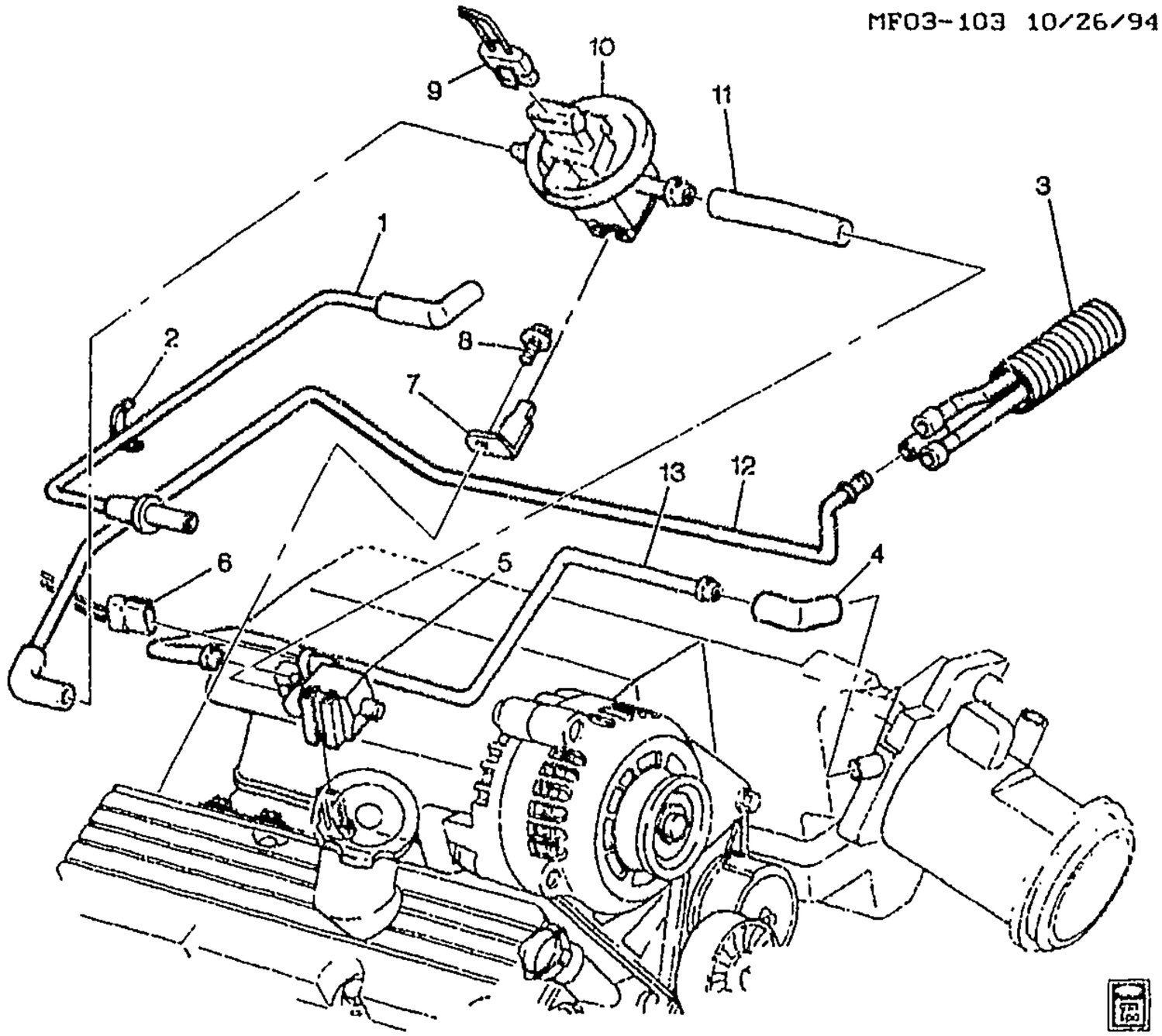

MF03-103

1995-1997 F VAPOR CANISTER LINES & VALVE (L36/3.8K)

1.	4-A20	3.330	TUBE, FUEL PRESS REG VAC ..	95-97	F (L36)	1	24503421
2.		N.S.	TAPE, PRESS SENS ADH		.....		
3.	4-A15	3.163	PIPE, FUEL FEED & RTN	95-97	F67 (L36)	1	10285261
	4-A15	3.163	PIPE, FUEL FEED & RTN	95-97	F87 (L36)	1	10285260
4.	4-A12	3.145	CONNECTOR, EVAP EMIS CNSTR PURGE PIPE	95-97	F (L36)	1	24503110
5.	4-A11	3.130	VALVE, EVAP EMIS CNSTR PURGE (AC-DELCO #214-567)	95-97	F (L36)	1	1997210
6.		8.965	CONNECTOR (SOL-EVAP EMIS CNSTR PURGE VLV) (2.535) (AC-DELCO #PT250)	95-97	F	AR	12101858
7.	4-A11	3.130	BRACKET, EVAP EMIS CNSTR PURGE SOL VLV	95-97	F (L36)	1	24503875
8.		8.977	BOLT, M6X1X13, 10 THD, 12.5 OD (EVAP EMIS CNSTR PURGE VAC SW)	95-97	F	1	11509699
9.	4-A11	3.130	CONNECTOR, SW-EVAP EMIS CNSTR PURGE VAC (BLACK) (2-WAY F W/LEADS) (3.670) (AC-DELCO #PT374)	95-97	F (L36)	1	12102747
10.	4-A12	3.140	SWITCH, EVAP EMIS CNSTR PURGE VAC (10MM VENT PORT) (AC-DELCO #212-358)	95-97	F (L36)	1	24506192

cardiagn.com

11.	4-A12	3.145	PIPE, EVAP EMIS CNSTR PURGE SOL VLV	95-97	F (L36)	1	24505518
12.	4-A12	3.145	PIPE, EVAP EMIS CNSTR PURGE	95-97	F (L36, M30)	1	24505530
	4-A12	3.145	PIPE, EVAP EMIS CNSTR PURGE	96-97	F (L36, M49)	1	24505530
13.	4-A12	3.145	PIPE, EVAP EMIS CNSTR PURGE	95-97	F (L36)	1	24503426

RPO DEFINITIONS

L36 -- ENGINE GAS, 6 CYL, 3.8K, MFI, V6, HO (ERV6 SERIES)
M30 -- TRANSMISSION,AUTOMATIC 4 SPEED,4L60E,ELECTRONIC
M49 -- TRANSMISSION MAN 5 SPD, BORG WARNER, 77MM, 3.75 1ST, .76 5TH, O/D

cardiagn.com

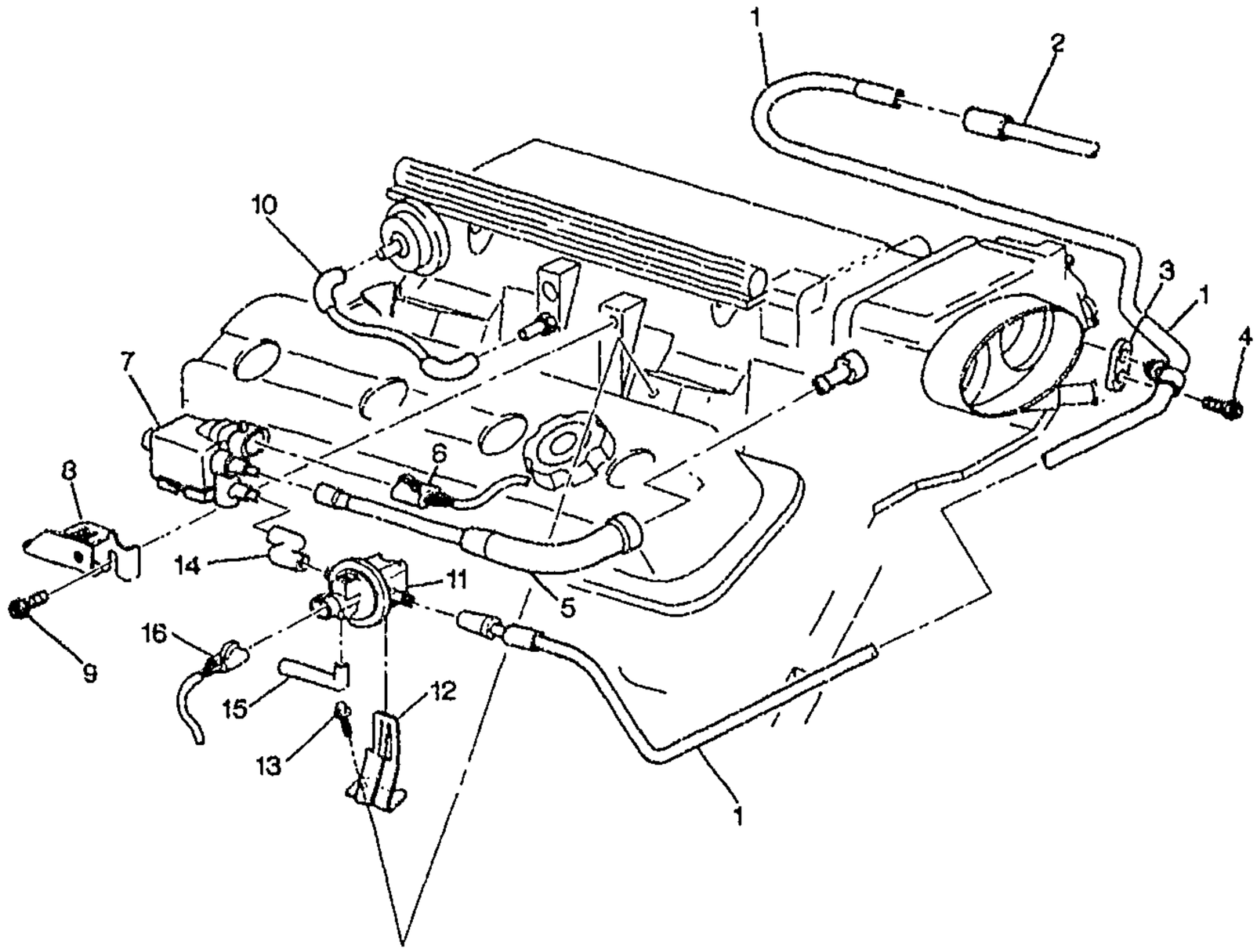

MF03-108

1996-1997 F VAPOR CANISTER LINES & VALVE (LT1/5.7P)

1.	4-A12	3.145	TUBE, EVAP EMIS CNSTR PURGE	96-97	F (LT1)	1	12555606
2.	4-A15	3.163	PIPE, FUEL FEED & RTN (SEE FUEL SUPPLY SYSTEM ILLUSTRATION IN GRP. 3.000 FOR DETAILED VIEW.)	96-97	F67 (LT1)	1	10258442
	4-A15	3.163	PIPE, FUEL FEED & RTN (SEE FUEL SUPPLY SYSTEM ILLUSTRATION IN GRP. 3.000 FOR DETAILED VIEW.)	96-97	F87 (LT1)	1	10258441
3.	4-A12	3.145	RETAINER, EVAP EMIS CNSTR PURGE TUBE	96-97	F (LT1)	1	10186192
4.		8.900	BOLT, HEX 3/8-16 X 3/4 PH, 300M STL (IGN COIL)	96-97	.....	1	9424336
5.	4-A12	3.145	PIPE, EVAP EMIS CNSTR PURGE SOL VLV	96-97	F (LT1)	1	10105324
6.		8.965	CONNECTOR (SOL-EVAP EMIS CNSTR PURGE VLV) (2.535) (AC-DELCO #PT250)	96-97	F	1	12101858

cardiagn.com

7.	4-A11	3.130	**VALVE**, EVAP EMIS CNSTR PURGE SOL (2 PORT VAC, 2 BLADE TERM) (AC-DELCO #214-565)	96-97	F (LT1)	1	1997201
8.	4-A11	3.130	**BRACKET**, EVAP EMIS CNSTR PURGE SOL VLV	96-97	F (LT1)	1	12551612
9.		8.900	**BOLT**, HFH, M5X.8X10, 8.8 THD, 11.4 OD, 9.8, PO (EVAP EMIS CNSTR PURGE SOL VLV BRKT)	96-97		1	11514607
10.	4-A20	3.330	**TUBE**, FUEL PRESS REG VAC	96-97	F (LT1)	1	10216948
11.	4-A12	3.140	**SWITCH**, EVAP EMIS CNSTR PURGE VAC (SWITCH W/2 CONNECTIONS W/VENT HOLE)	96-97	F (LT1)	1	12555984
12.	4-A12	3.140	**BRACKET**, EVAP EMIS CNSTR PURGE VAC SW	96-97	F (LT1)	1	12551613
13.		8.977	**BOLT**, M6X1X13, 10 THD, 12.5 OD (FWD LP WRG HARN RLY BLK)	96-97	F	1	11509699
14.	4-A11	3.120	**HOSE**, EVAP EMIS CNSTR PURGE VAC SW (3.145)	96-97	F (LT1)	1	12556259
15.	4-A12	3.145	**CONNECTOR**, EVAP EMIS CNSTR PURGE HOSE (90 DEG ELBOW)	96-97	F (LT1)	1	12555830
16.	4-A12	3.140	**CONNECTOR**, SW-EVAP EMIS CNSTR PURGE VAC DIAGN (BLACK) (2-WAY F W/LEADS) (3.670) (AC-DELCO #PT374)	96-97	F	2	12102747

RPO DEFINITIONS
LT1 – ENGINE-GAS, 8 CYL, 5.7L(5.7P),MFI,HO

cardiagn.com

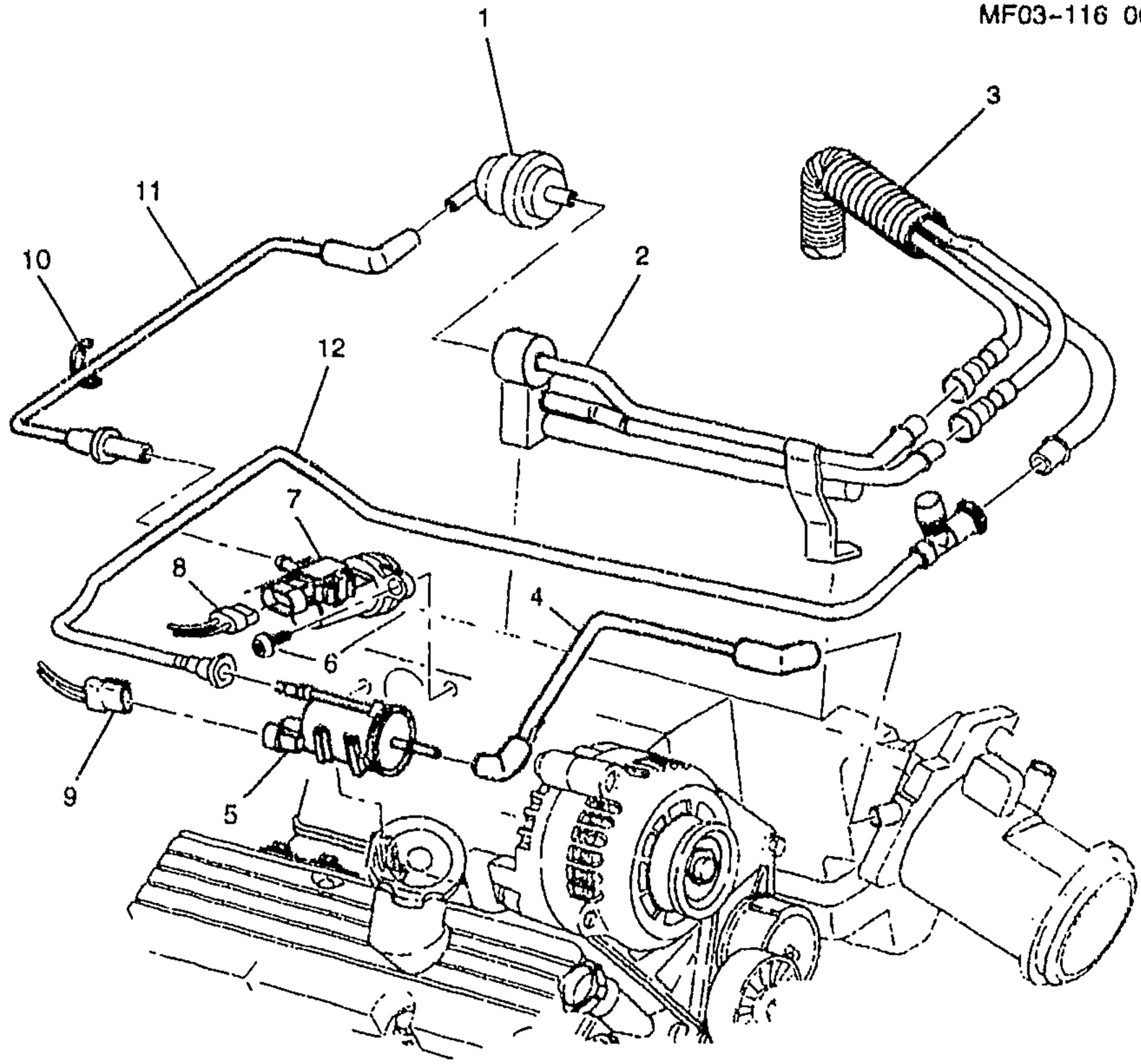

MF03-116

1998 F VAPOR CANISTER LINES & VALVE (L36/3.8K)

1.	4-A20	3.330	**REGULATOR**, FUEL PRESS (PART OF 2) (AC-DELCO #217-397)	98 F (L36)	1	17113346
2.		N.S.	**INJECTOR**, SEQ M/PORT FUEL (W/FUEL RL) (INCLS 1) (SEE GROUP 3.000 "INJECTOR, SEQ" FOR DETAIL ILLUSTRATED VIEW)			
3.	4-A15	3.163	**PIPE**, FUEL FEED FRT	98 F (L36)	1	10281369
4.	4-A12	3.145	**TUBE**, EVAP EMIS CNSTR PURGE	98 F (L36)	1	24505602
5.	4-A11	3.130	**VALVE**, EVAP EMIS CNSTR PURGE SOL (LOCATION NEAR ENGINE INTAKE MANIFOLD (FROM THROTTLE BODY) (AC-DELCO #214-641)	98 F (L36)	1	1997278
6.	4-A19	3.278	**BOLT**, VAC SCE HARN MANIF	98 F (L36)	2	24505038
7.	4-A19	3.278	**MANIFOLD**, VAC SCE	98 F (L36)	1	24503419

cardiagn.com

8.		8.965	CONNECTOR (SOL-EVAP EMIS CNSTR PURGE VLV) (2.535) (AC-DELCO #PT250)	98	F	AR	12101858
9.		8.965	CONNECTOR (SOL-EVAP EMIS CNSTR PURGE VLV) (2.535) (AC-DELCO #PT250)	98	F	AR	12101858
10.		N.S.	TAPE, PRESS SENS ADH		.....		
11.	4-A20	3.330	TUBE, FUEL PRESS REG VAC ..	98	F (L36)	1	24503421
12.	4-A12	3.145	PIPE, EVAP EMIS CNSTR PURGE (INCLS EVAP EMIS CNSTR VALVE)	98	F (L36)	1	24505605

RPO DEFINITIONS

L36 – ENGINE GAS, 6 CYL, 3.8K, MFI, V6, HO (ERV6 SERIES)

cardiagn.com

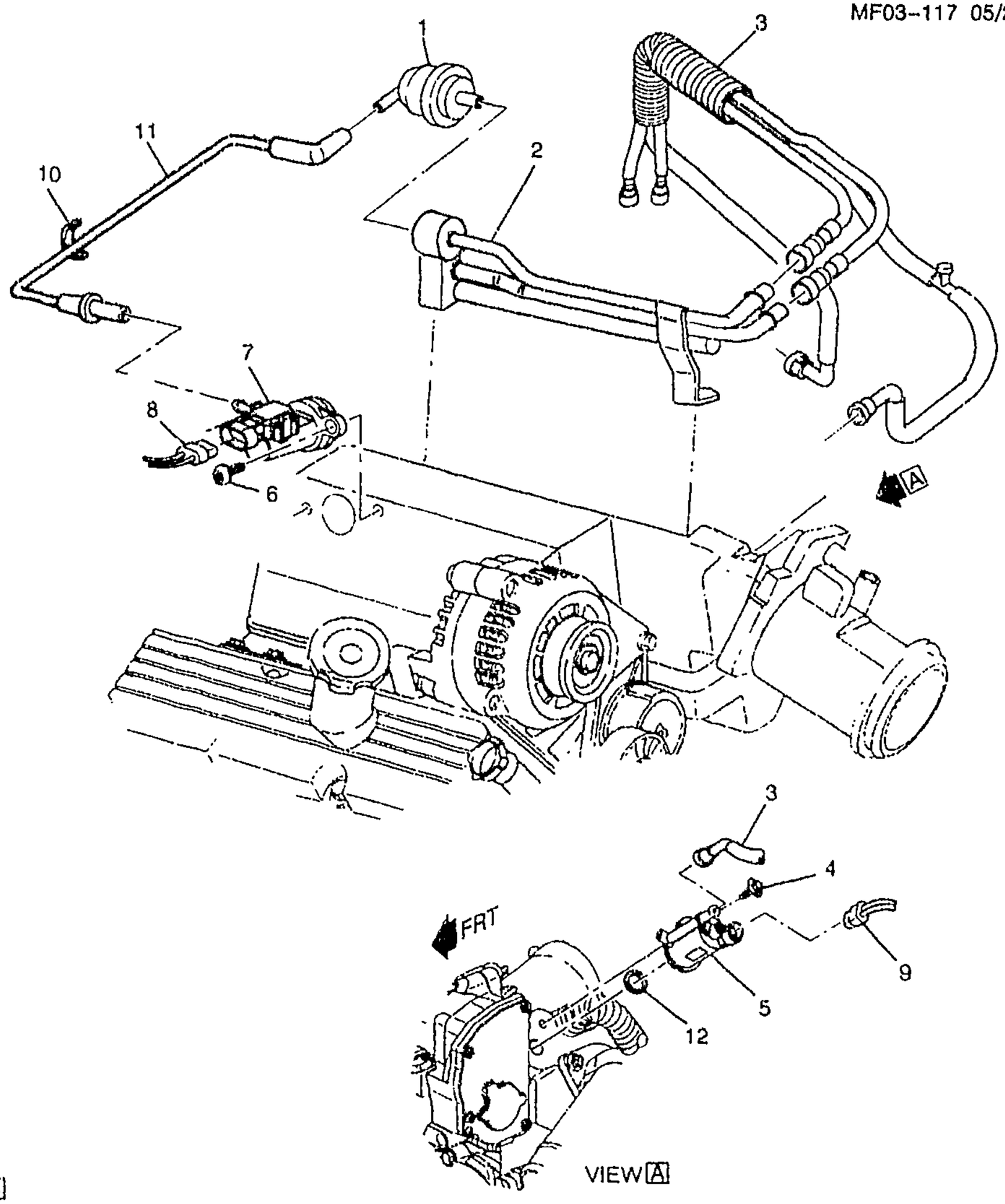

1999-2002 F VAPOR CANISTER LINES & VALVE (L36/3.8K)

1.	4-A20	3.330	REGULATOR, FUEL PRESS (PART OF 2) (AC-DELCO #217-397)	99-02 F (L36)	1 17113346

cardiagn.com

2.		N.S.	**INJECTOR**, SEQ M/PORT FUEL (W/FUEL RL) (INCLS 1) (SEE GROUP 3.000 "INJECTOR, SEQ" FOR DETAIL ILLUSTRATED VIEW)				
3.	4-A15	3.163	**PIPE**, FUEL FEED FRT	99-02	F (L36)	1	10291925
4.		8.900	**BOLT/SCREW**, HEX W/FL WA 17 OD, M6X1X20, 9.8, 4345M, DOG PT (EVAP EMIS CNSTE PURGE SOL VLV)	99-02	F	1	11515704
5.	4-A11	3.130	**VALVE**, EVAP EMIS CNSTR PURGE SOL (LOCATION AT INTAKE MANIFOLD) (INCLS 12) (AC-DELCO #214-646)	99-02	F (L36)	1	1997279
	4-A11	3.130	**VALVE**, EVAP EMIS CNSTR PURGE SOL (LOCATION NEAR ENGINE INTAKE MANIFOLD (FROM THROTTLE BODY) (INCLS 12) (AC-DELCO #214-641)	99-02	F (L36)	1	1997278
6.	4-A19	3.278	**BOLT**, VAC SCE HARN MANIF	99-02	F (L36)	2	24505038
7.	4-A19	3.278	**MANIFOLD**, VAC SCE	99-02	F (L36)	1	24503419
8.		8.965	**CONNECTOR** (SOL-EVAP EMIS CNSTR PURGE VLV) (2.535) (AC-DELCO #PT250)	99-02	F	AR	12101858
9.		8.965	**CONNECTOR** (SOL-EVAP EMIS CNSTR PURGE VLV) (2.535) (AC-DELCO #PT250)	99-02	F	AR	12101858
10.		N.S.	**TAPE**, PRESS SENS ADH				
11.	4-A20	3.330	**TUBE**, FUEL PRESS REG VAC	99-02	F (L36)	1	24503421
12.	4-A11	3.130	**SEAL**, EVAP EMIS CNSTR PURGE SOL VLV (O RING) (PART OF 5)	99-02	F (L36)	1	10490666

RPO DEFINITIONS
L36 – ENGINE GAS, 6 CYL, 3.8K, MFI, V6, HO (ERV6 SERIES)

cardiagn.com

CHEVROLET
CHASSIS GROUP 3.000

ILLUSTRATION INDEX

	TITLE	GRID
1993	F A.I.R. PUMP & RELATED PARTS (LT1/5.7P)	4–I5
1993–1995	F A.I.R. PUMP & RELATED PARTS (L32/3.4S)	4–I7
1994	F A.I.R. PUMP & RELATED PARTS (LT1/5.7P)	4–I9
1995	F A.I.R. PUMP & RELATED PARTS (LT1/5.7P)(1ST DES)	4–I9
1995	F A.I.R. PUMP & RELATED PARTS (LT1/5.7P)(2ND DES)	4–I12
1996–1997	F A.I.R. PUMP & RELATED PARTS (LT1/5.7P)	4–I15
1998–1999	F A.I.R. PUMP & RELATED PARTS (LS1/5.7G)	4–I17
2000–2002	F A.I.R. PUMP & RELATED PARTS (LS1/5.7G)	4–I20
1993	F CRUISE CONTROL (K34)	4–I23
1994	F CRUISE CONTROL (K34)	4–J2
1995–1997	F CRUISE CONTROL (K34,EXC NW9)	4–J2
1995–1997	F CRUISE CONTROL (K34,NW9)	4–J6
1998–2002	F CRUISE CONTROL (K34,EXC NW9)	4–J9
1998–2002	F CRUISE CONTROL (K34,NW9)	4–J14
1994–1995	F E.C.M. MODULE & WIRING HARNESS (L32/3.4S)	4–J20
1993	F P.C.M. MODULE & WIRING HARNESS (L32/3.4S)	4–J22
1993	F P.C.M. MODULE & WIRING HARNESS (LT1/5.7P)	4–J24
1994–1997	F P.C.M. MODULE & WIRING HARNESS (LT1/5.7P)	4–J26
1995–2002	F P.C.M. MODULE & WIRING HARNESS (L36/3.8K)	4–K2
1998–2002	F P.C.M. MODULE & WIRING HARNESS (LS1/5.7G)	4–K6
1993	F E.G.R. VALVE & RELATED PARTS (LT1/5.7P)	4–K9
1993–1995	F E.G.R. VALVE & RELATED PARTS (L32/3.4S)	4–K11
1994–1997	F E.G.R. VALVE & RELATED PARTS (LT1/5.7P)	4–K12
1995–2002	F E.G.R. VALVE & RELATED PARTS (L36/3.8K)	4–K14
1998–2002	F E.G.R. VALVE & RELATED PARTS (LS1/5.7G)	4–K16
1993	F M.A.P. & OXYGEN SENSORS (LT1/5.7P)	4–K18
1993–1995	F M.A.P. & OXYGEN SENSORS (L32/3.4S)	4–K20
1994–1997	F M.A.P. & OXYGEN SENSORS (LT1/5.7P)	4–K22
1995–2002	F M.A.P. & OXYGEN SENSORS (L36/3.8K)	4–K24
1998	F M.A.P. & OXYGEN SENSORS (LS1/5.7G)(EXC NM8)	4–K27
1998	F M.A.P. & OXYGEN SENSORS (LS1/5.7G)(NM8)	4–L2
1999–2002	F M.A.P. & OXYGEN SENSORS (LS1/5.7G)(NM2)	4–L2
1993–1994	F EXHAUST SYSTEM–V8 (LT1/5.7P)	4–L4
1995	F EXHAUST SYSTEM–V8 (LT1/5.7P)(NA5)	4–L4
1993–1995	F EXHAUST SYSTEM–V6 (L32/3.4S)	4–L7
1995	F EXHAUST SYSTEM –V8 (LT1/5.7P)(NB6)	4–L10
1996–1997	F EXHAUST SYSTEM–V8 (LT1/5.7P)	4–L10
1995–1997	F EXHAUST SYSTEM–V6 (L36/3.8K)(SINGLE	4–L13
1996–1997	F EXHAUST SYSTEM–V6 (L36/3.8K)(DUAL	4–L16
1998	F EXHAUST SYSTEM–V8 (LS1/5.7G)(EXC VP6)	4–L19
1998	F EXHAUST SYSTEM–V8 (LS1/5.7G)(SINGLE(NM8,VP6)	4–L22
1999–2002	F EXHAUST SYSTEM–V8 (LS1/5.7G)(NM2,VP6)	4–L22
1998	F EXHAUST SYSTEM–V6 (L36/3.8K)	4–L25
1999	F EXHAUST SYSTEM–V8 (LS1/5.7G)(DUAL(EXC VP6)	4–M2

cardiagn.com

	TITLE	GRID
1999–2002	F EXHAUST SYSTEM–V6 (L36/3.8K)(DUAL	4–M5
1993–1997	F CATALYTIC CONVERTER HEAT ALARM (UD6)	4–M8

cardiagn.com

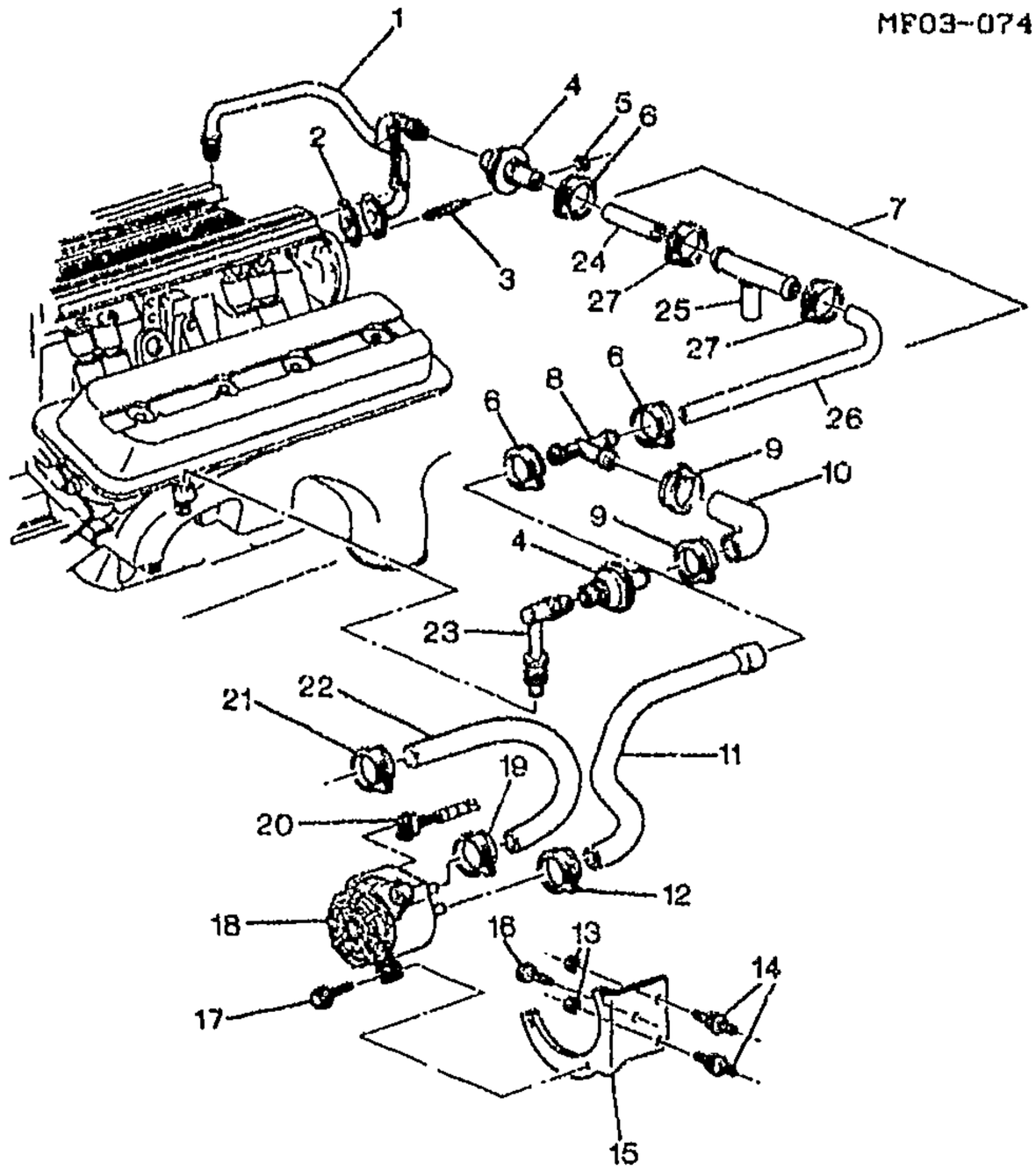

MF03-074

1993 F A.I.R. PUMP & RELATED PARTS (LT1/5.7P)

1.	4-C21	3.675	**PIPE**, SECD AIR INJN (AC-DELCO #10220124)	93	F (LT1)	RH	10220124
2.	4-C21	3.675	**GASKET**, SECD AIR INJN CHK VLV PIPE	93	F (LT1)	2	10055726
3.	4-C21	3.675	**STUD**, SECD AIR INJN BYPASS VLV PIPE (5/16 X 18 X 1 43/64) (1.428)	93	F (LT1)	2	14080362
4.	4-C12	3.670	**VALVE**, SECD AIR INJN CHK (AC-DELCO #214-419)	93	F (LT1)	2	22048212
5.		8.917	**NUT**, HFH 5/16-18X.20 286M PC .67-OD (SECD AIR INJN BYPASS VLV PIPE)	93	.....	2	1359887
6.		8.948	**CLAMP**, SIZE 6, .30MIN. - .87MAX - HEX/SLOTTED (SECD AIR INJN BYPASS VLV DVTR HOSE)	93	.....	3	15620999
7.	4-C21	3.675	**HOSE**, SECD AIR INJN BYPASS VLV (475MM) (INCLS 24-27)	93	F (LT1)	1	10235327
8.	4-C24	3.680	**CONNECTOR**, SECD AIR INJN CHK VLV PIPE (15.5X15.5X22) ...	93	F (LT1)	1	10105352
9.		8.948	**CLAMP**, SIZE 6, .30MIN. - .87MAX - HEX/SLOTTED (SECD AIR INJN CHK VLV HOSE)	93	.....	2	15620999

cardiagn.com

10.	4-C21	3.675	**HOSE**, SECD AIR INJN BYPASS VLV (56MM)	93	F (LT1)	1	10108496
11.	4-C21	3.675	**HOSE**, SECD AIR INJN CHK VLV	93	F (LT1)	1	12550300
12.		8.948	**CLAMP**, 28.6-86.2 DIA WORM GEAR (SECD AIR INJN PUMP HOSE) (AC-DELCO #12338017)	93		1	12338017
13.		8.917	**NUT**, HEX W/CON WA 6X1X5.5 16--OD ZP 9 (SECD AIR INJN PUMP BRKT)	93		2	11517293
14.	4-C11	3.655	**STUD**, SECD AIR INJN PUMP BRKT (M10X1.5X30/M6X1X26)	93	F (LT1)	2	10186163
15.	4-C11	3.655	**BRACKET**, SECD AIR INJN PUMP	93	F (LT1)	1	10243575
16.	4-C11	3.655	**BOLT**, SECD AIR INJN PUMP BRKT (M6X1.0X34.35) (10.152)	93	F (LT1)	1	10222298
17.		8.900	**BOLT**, HEX W/WA, M6X1X40, 9.8, POR, 24 OD, ACPNT (SECD AIR INJN PUMP BRKT)	93		3	11513677
18.	4-C12	3.660	**PUMP**, SECD AIR INJN (AC-DELCO #215-345) (ON 1993, MUST ALSO USE BRKT 10243575)	93	F (LT1)	1	24505066
19.		8.948	**CLAMP**, SIZE 6, .30MIN. - .87MAX - HEX/SLOTTED (SECD AIR INJN PUMP HOSE)	93		1	15620999
20.	4-C12	3.660	**CONNECTOR**, MOT-SECD AIR INJN PUMP (BLACK) (3-WAY F) (W/LEADS) (2.383) (AC-DELCO #PT420)	93	F	1	12117025
21.		8.948	**CLAMP**, SIZE 6, .30MIN. - .87MAX - HEX/SLOTTED (SECD AIR INJN PUMP A/CL HOSE)	93		1	15620999
22.	4-C21	3.675	**HOSE**, SECD AIR INJN PUMP A/CL	93	F (LT1)	1	12550271
23.	4-C21	3.675	**PIPE**, SECD AIR INJN (AC--DELCO #10209979)	93	F (LT1)	LH	10209979
24.	4-C21	3.875	**HOSE**, SECD AIR INJN BYPASS VLV VAC (PART OF 7) (55MM LG)	93	F	1	10235329
25.	4-C12	3.670	**VALVE**, SECD AIR INJN BL (PART OF 7) (AC-DELCO #214--614)	93	F (LT1)	1	10235337
26.	4-C21	3.675	**HOSE**, SECD AIR INJN BYPASS VLV VAC (PART OF 7) (122MM LG)	93	F	1	10235328
27.		8.948	**CLAMP**, SIZE 6, .30MIN. - .87MAX - HEX/SLOTTED (PART OF 7)	93		2	15620999

RPO DEFINITIONS

LT1 - ENGINE-GAS, 8 CYL, 5.7L(5.7P),MFI,HO

cardiagn.com

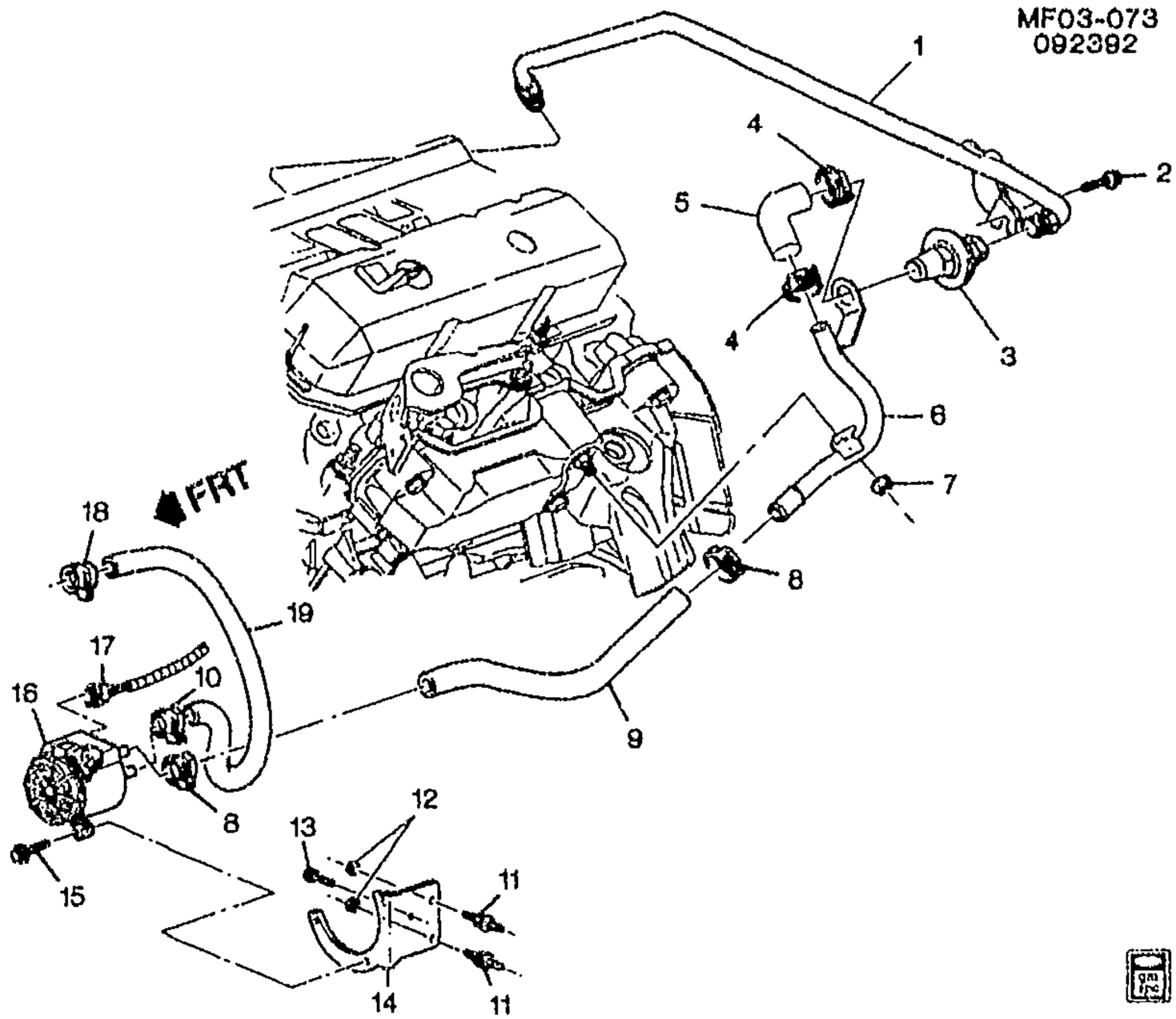

MF03-073

1993-1995 F A.I.R. PUMP & RELATED PARTS (L32/3.4S)

1.	4-C21	3.675	PIPE, SECD AIR INJN CHK VLV (AC-DELCO #10235782)	93-95	F (L32, M49)	1	10235782
2.		8.900	BOLT, HFH M10X1.5X16 9.8 PEOR DIM A-14 21.5 OD (SECD AIR INJN PIPE)	93-95	.....	1	11515763
3.	4-C12	3.670	VALVE, SECD AIR INJN CHK (AC-DELCO #214-419)	93-95	F (L32, M49)	2	22048212
4.		8.948	CLAMP, SPR (25-29MM) (SECD AIR INJN CHK VLV HOSE)	93-95	....	2	10108255
5.	4-C24	3.680	CONNECTOR, SECD AIR INJN CHK VLV PIPE (AT PIPE) (3.675) .	93-95	F (L32)	1	10217106
	4-C24	3.680	CONNECTOR, SECD AIR INJN CHK VLV PIPE (AT PIPE) (5/8 X 5/8 X 3/16)	94-95	F (L32, M49)	1	24504030
6.	4-C21	3.675	PIPE, SECD AIR INJN PUMP (BACK PIPE) (BACK PIPE) (AC-DELCO #219-212)	93-95	F (L32, M49)	1	10227073
7		8.917	NUT, HFH, M6X1.25, 17.9 OD, 738 THK, 13MM HEX, 10, ZF (SECD AIR INJN PIPE) (8.915) (AC-DELCO #11514596)	93-95	.....	1	11514596
8.		8.948	CLAMP, 28.6-86.2 DIA WORM GEAR (SECD AIR INJN PUMP HOSE) (AC-DELCO #12338017)	93-95	F	1	12338017

cardiagn.com

9.	4-C21	3.675	HOSE, SECD AIR INJN PUMP ...	93-95	F (L32, M49)	1	10242422
10.		8.948	CLAMP, SIZE 6, .30MIN. - .87MAX - HEX/SLOTTED (SECD AIR INJN PUMP HOSE)	93-95	.....	1	15620999
11.	4-C11	3.655	STUD, SECD AIR INJN PUMP BRKT (M10X1.5X30/M6X1X26) ...	93-95	F (L32, M49)	2	10186163
12.		8.917	NUT, HEX W/CON WA 6X1X5.5 16-OD ZP 9 (SECD AIR INJN PUMP BRKT)	93-95	.....	2	11517293
13.		8.977	SCREW, (M6.3-1.81X35 HEX TAP W/CONICAL & SEAL WA-PC) (SECD AIR INJN PUMP BRKT)	93-95	.....	1	499558
14.	4-C11	3.655	BRACKET, SECD AIR INJN PUMP	93-95	F (L32, M49)	1	10243575
15.		8.900	BOLT, HEX W/WA, M6X1X40, 9.8, POR, 24 OD, ACPNT (SECD AIR INJN PUMP BRKT)	93-95	.....	3	11513677
16.	4-C12	3.660	PUMP, SECD AIR INJN (AC--DELCO #215-345) (ON 1993, MUST ALSO USE BRKT 10243575)	93-95	F (L32, M49)	1	24505066
17.	4-C12	3.660	CONNECTOR, MOT-SECD AIR INJN PUMP (BLACK) (3--WAY F) (W/LEADS) (2.383) (AC-DELCO #PT420)	93-95	F	1	12117025
18.		8.948	CLAMP, SIZE 6, .30MIN. - .87MAX - HEX/SLOTTED (SECD AIR INJN PUMP A/CL HOSE)	93-95	.....	1	15620999
19.	4-C21	3.675	HOSE, SECD AIR INJN PUMP A/CL	93-95	F (L32, M49)	1	12550271

RPO DEFINITIONS

L32 - ENGINE,3.4L,V6,(3.4S),SFI,OHV

M49 - TRANSMISSION MAN 5 SPD, BORG WARNER, 77MM, 3.75 1ST, .76 5TH, O/D

cardiagn.com

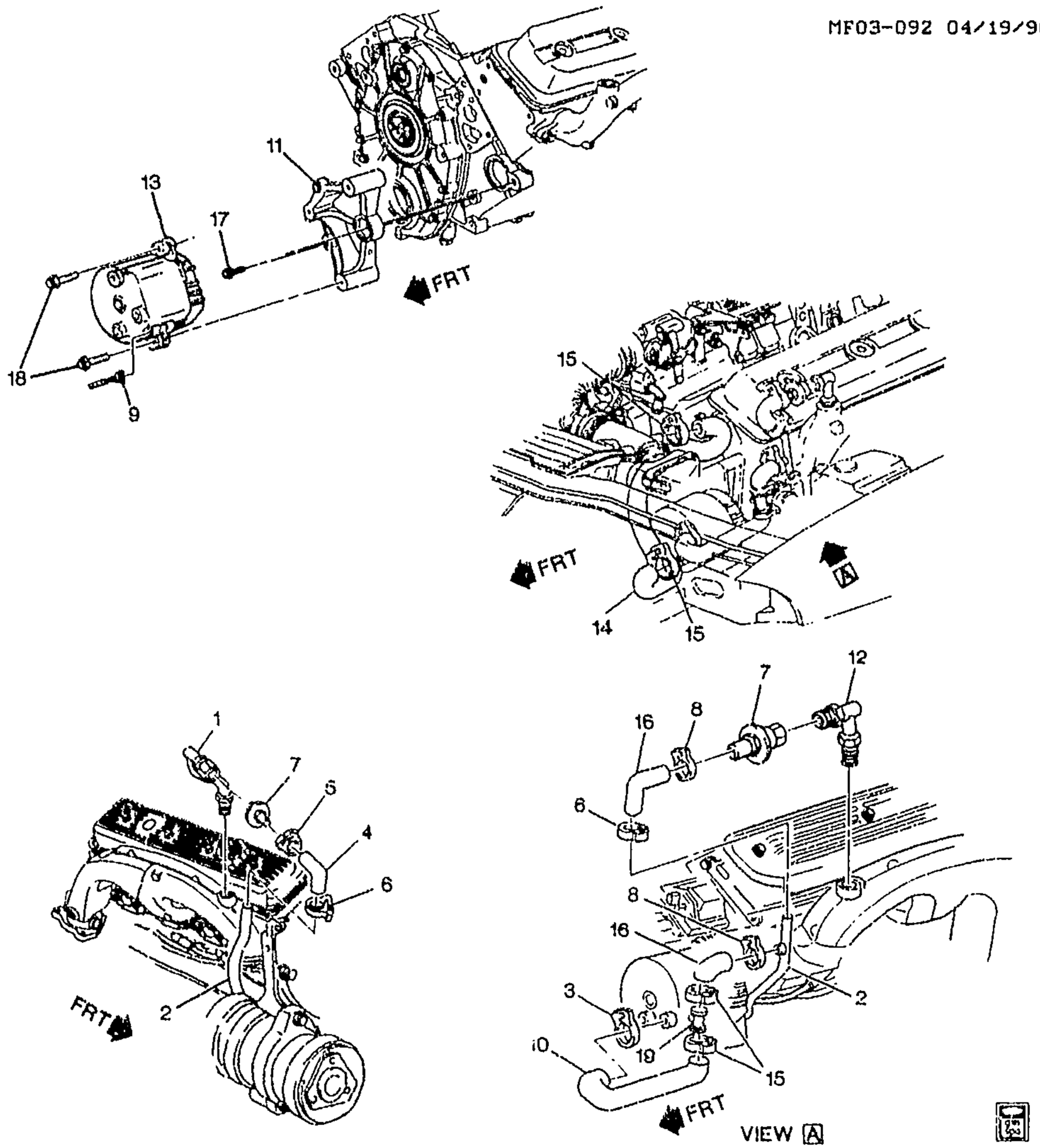

MF03-092

1994 F A.I.R. PUMP & RELATED PARTS (LT1/5.7P)
1995 F A.I.R. PUMP & RELATED PARTS (LT1/5.7P)(1ST DES)

1.	4-C21	3.675	PIPE, SECD AIR INJN (AC-DELCO #219-209)	94 F	RH	10244578

cardiagn.com

	4-C21	3.675	PIPE, SECD AIR INJN (A.I.R. PIPE FITS DIRECTLY IN THE EXT MANIF) (FOR 2ND DES SEE 12552899) (AC-DELCO #219-209)	95	F (1ST DES)	RH	10244578
2.	4-C21	3.675	PIPE, SECD AIR INJN (CROSSUNDER PIPE) (AC-DELCO #219-213)	94-95	F	1	10244579
3.		8.948	CLAMP, 28.6-86.2 DIA WORM GEAR (SECD AIR INJN PUMP HOSE) (AC-DELCO #12338017)	94-95	F	1	12338017
4.	4-C21	3.675	HOSE, SECD AIR INJN CHK VLV	94	F (LT1)	RH	12550222
	4-C21	3.675	HOSE, SECD AIR INJN CHK VLV (A.I.R. PIPE FITS DIRECTLY IN MANIF, FOR 2ND DES SEE 12554957)	95	F (LT1) (1ST DES)	RH	12550222
5.		8.948	CLAMP, 28.6-86.2 DIA WORM GEAR (SECD AIR INJN CHK VLV HOSE) (AC-DELCO #12338017)	94-95	F	1	12338017
6.	4-C24	3.680	CLAMP, SECD AIR INJN CHK VLV PIPE CONN (1.762)	94-95	F (LT1)	2	1623010
7.	4-C12	3.670	VALVE, SECD AIR INJN CHK (AC-DELCO #214-419)	94-95	F (LT1)	2	22048212
8.		8.948	CLAMP, SIZE 6, .30MIN. - .87MAX - HEX/SLOTTED (SECD AIR INJN CHK VLV HOSE)	94-95	F	2	15620999
9.	4-C12	3.660	CONNECTOR, MOT-SECD AIR INJN PUMP (BLACK) (3-WAY F) (W/LEADS) (2.383) (AC-DELCO #PT420)	94-95	F	1	12117025
10.	4-C21	3.675	HOSE, SECD AIR INJN PUMP (INCLS 15, 16 & 19) (W/FOAM FLTR IN BLEED VLV)	94	F (LT1) (2ND DES)	1	10239163
	4-C21	3.675	HOSE, SECD AIR INJN PUMP (INCLS 15, 16 & 19) (W/O VLV: VLV IS EXTERNAL)	94	F (LT1) (1ST DES)	1	12550917
	4-C21	3.675	HOSE, SECD AIR INJN PUMP (INCLS 15, 16 & 19) (W/FOAM FLTR IN BLEED VLV)	95	F (LT1)	1	10239163
11.	4-C11	3.655	BRACKET, SECD AIR INJN PUMP	94-95	F (LT1)	1	10215680
12.	4-C21	3.675	PIPE, SECD AIR INJN (AC-DELCO #219-208)	94	F	LH	12550779
	4-C21	3.675	PIPE, SECD AIR INJN (A.I.R. PIPE FITS DIRECTLY IN THE EXT MANIF) (AC-DELCO #219-208)	95	F (1ST DES)	LH	12550779
	4-C21	3.675	PIPE, SECD AIR INJN (A.I.R. PIPE FITTED IN MANIFOLD W/MALE CONNECTOR, FOR 1ST DES SEE 12550779) (AC-DELCO #219-177)	95	F (LT1) (2ND DES)	LH	12552898
13.	4-C12	3.660	PUMP, SECD AIR INJN (AC-DELCO #215-133)	94-95	F (LT1)	1	12554580
14.	4-C21	3.675	HOSE, SECD AIR INJN PUMP (TO A/CLNR)	94-95	F (LT1)	1	10217102
15.		8.948	CLAMP, SIZE 6, .30MIN. - .87MAX - HEX/SLOTTED (PART OF 10)	94-95	F	3	15620999

cardiagn.com

16.	4-C24	3.680	**CONNECTOR**, SECD AIR INJN CHK VLV PIPE (AT PIPE) (PART OF 10) (3.675)	94-95	F (LT1)	1	10217106
17.		8.900	**BOLT**, HFH 3/8-16X1.12 280M ZP FULL THD .75-OD (SECD AIR INJN PUMP BRKT)	94-95	F	2	9440071
18.		8.900	**BOLT**, METRIC HEX FLG HD (M6X1X30) (POR 9.8) (SECD AIR INJN PUMP BRKT)	94-95	F	3	11514008
19.		N.S.	**VALVE**, SECD AIR INJN BL (PART OF 10)		.....		

RPO DEFINITIONS

LT1 – ENGINE-GAS, 8 CYL, 5.7L(5.7P),MFI,HO

cardiagn.com

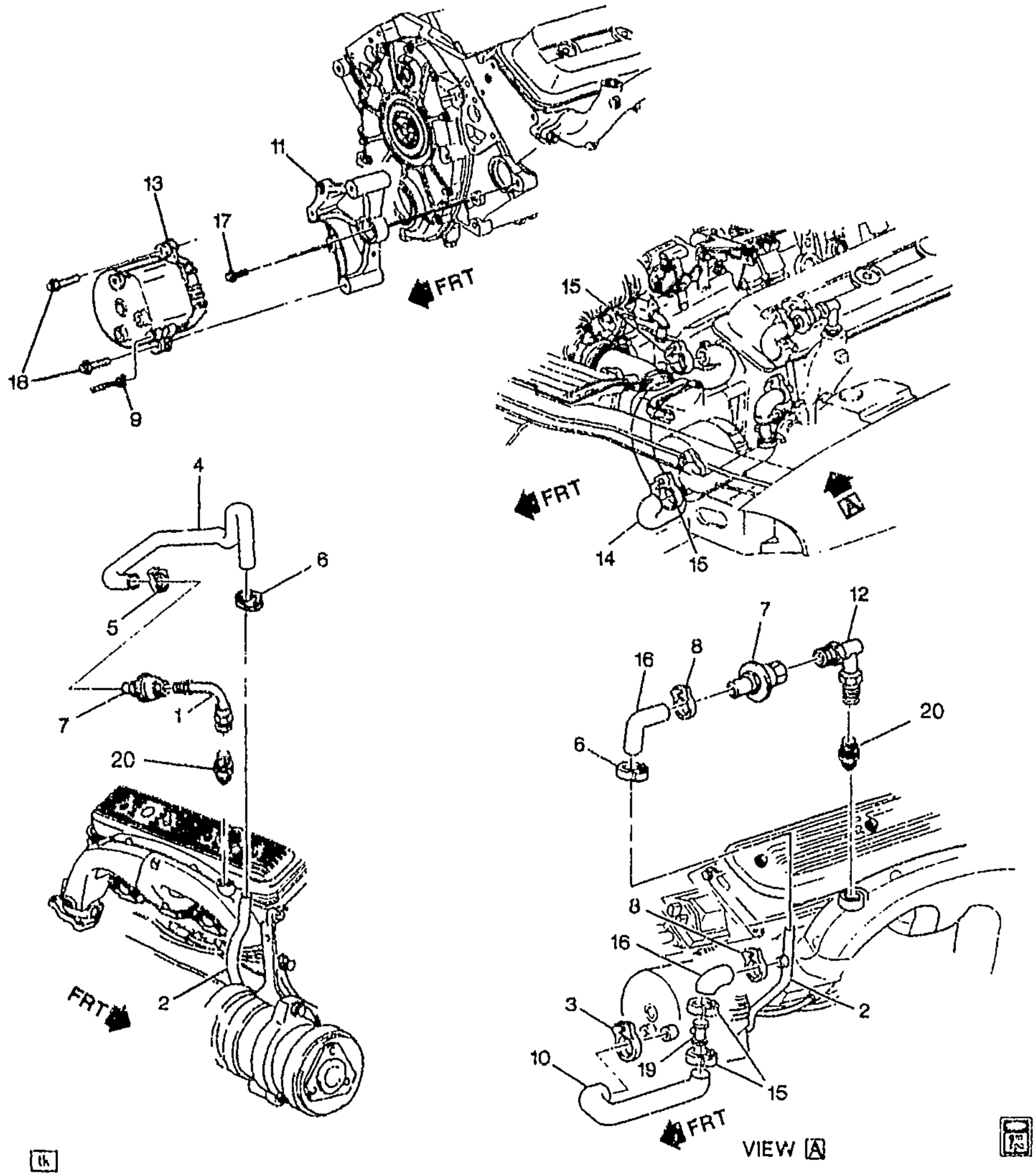

MF03--107

1995 F A.I.R. PUMP & RELATED PARTS (LT1/5.7P)(2ND DES)

1.	4-C21	3.675	PIPE. SECD AIR INJN (A.I.R. PIPE FITS IN THE EXT MANIF W/MALE CONN) (AC-DELCO #219-178) (A.I.R. PIPE FITS IN EXT MANIF W/MALE CONN. FOR 1ST DES SEE 10244578)	95 F (LT1) (2ND DES)	RH 12552899

cardiagn.com

2.	4-C21	3.675	**PIPE**, SECD AIR INJN (CROSSUNDER PIPE) (AC-DELCO #219-213)	95	F	1	10244579
3.		8.948	**CLAMP**, 28.6-86.2 DIA WORM GEAR (SECD AIR INJN PUMP HOSE) (AC-DELCO #12338017)	95	F	1	12338017
4.	4-C21	3.675	**HOSE**, SECD AIR INJN CHK VLV (A.I.R. PIPE FITS IN MANIFOLD W/MALE CONNECTOR, FOR 1ST DES SEE 12550222)	95	F (LT1) (2ND DES)	RH	12554957
5.		8.948	**CLAMP**, 28.6-86.2 DIA WORM GEAR (SECD AIR INJN CHK VLV HOSE) (AC-DELCO #12338017)	95	F	1	12338017
6.	4-C24	3.680	**CLAMP**, SECD AIR INJN CHK VLV PIPE CONN (1.762)	95	F (LT1)	2	1623010
7.	4-C12	3.670	**VALVE**, SECD AIR INJN CHK (AC-DELCO #214-419)	95	F (LT1)	2	22048212
8.		8.948	**CLAMP**, SIZE 6, .30MIN. - .87MAX - HEX/SLOTTED (SECD AIR INJN CHK VLV HOSE)	95	F	2	15620999
9.	4-C12	3.660	**CONNECTOR**, MOT-SECD AIR INJN PUMP (BLACK) (3-WAY F) (W/LEADS) (2.383) (AC-DELCO #PT420)	95	F	1	12117025
10.	4-C21	3.675	**HOSE**, SECD AIR INJN PUMP (INCLS 15, 16 & 19) (W/FOAM FLTR IN BLEED VLV)	95	F (LT1)	1	10239163
11.	4-C11	3.655	**BRACKET**, SECD AIR INJN PUMP	95	F (LT1)	1	10215680
12.	4-C21	3.675	**PIPE**, SECD AIR INJN (A.I.R. PIPE FITTED IN MANIFOLD W/MALE CONNECTOR, FOR 1ST DES SEE 12550779) (A.I.R. PIPE FITS IN EXT MANIF W/MALE CONN) (AC-DELCO #219-177)	95	F (LT1) (2ND DES)	LH	12552898
13.	4-C12	3.660	**PUMP**, SECD AIR INJN (AC-DELCO #215-133)	95	F (LT1)	1	12554580
14.	4-C21	3.675	**HOSE**, SECD AIR INJN PUMP (TO A/CLNR)	95	F (LT1)	1	10217102
15.		8.948	**CLAMP**, SIZE 6, .30MIN. - .87MAX - HEX/SLOTTED (PART OF 10)	95	F	3	15620999
16.	4-C24	3.680	**CONNECTOR**, SECD AIR INJN CHK VLV PIPE (AT PIPE) (PART OF 10) (3.675)	95	F (LT1)	1	10217106
17.		8.900	**BOLT**, HFH 3/8-16X1.12 280M ZP FULL THD .75-OD (SECD AIR INJN PUMP BRKT)	95	F	2	9440071
18.		8.900	**BOLT**, METRIC HEX FLG HD (M6X1X30) (POR 9.8) (SECD AIR INJN PUMP BRKT)	95	F	3	11514008
19.		N.S.	**VALVE**, SECD AIR INJN BL (PART OF 10)		.....		
20.	4-C24	3.680	**CONNECTOR**, SECD AIR INJN CHK VLV PIPE (HAS FTG IN MANIF W/MALE CONN, NO COMPARABLE 1ST DES)	95	F (2ND DES)	1	12552329

cardiagn.com

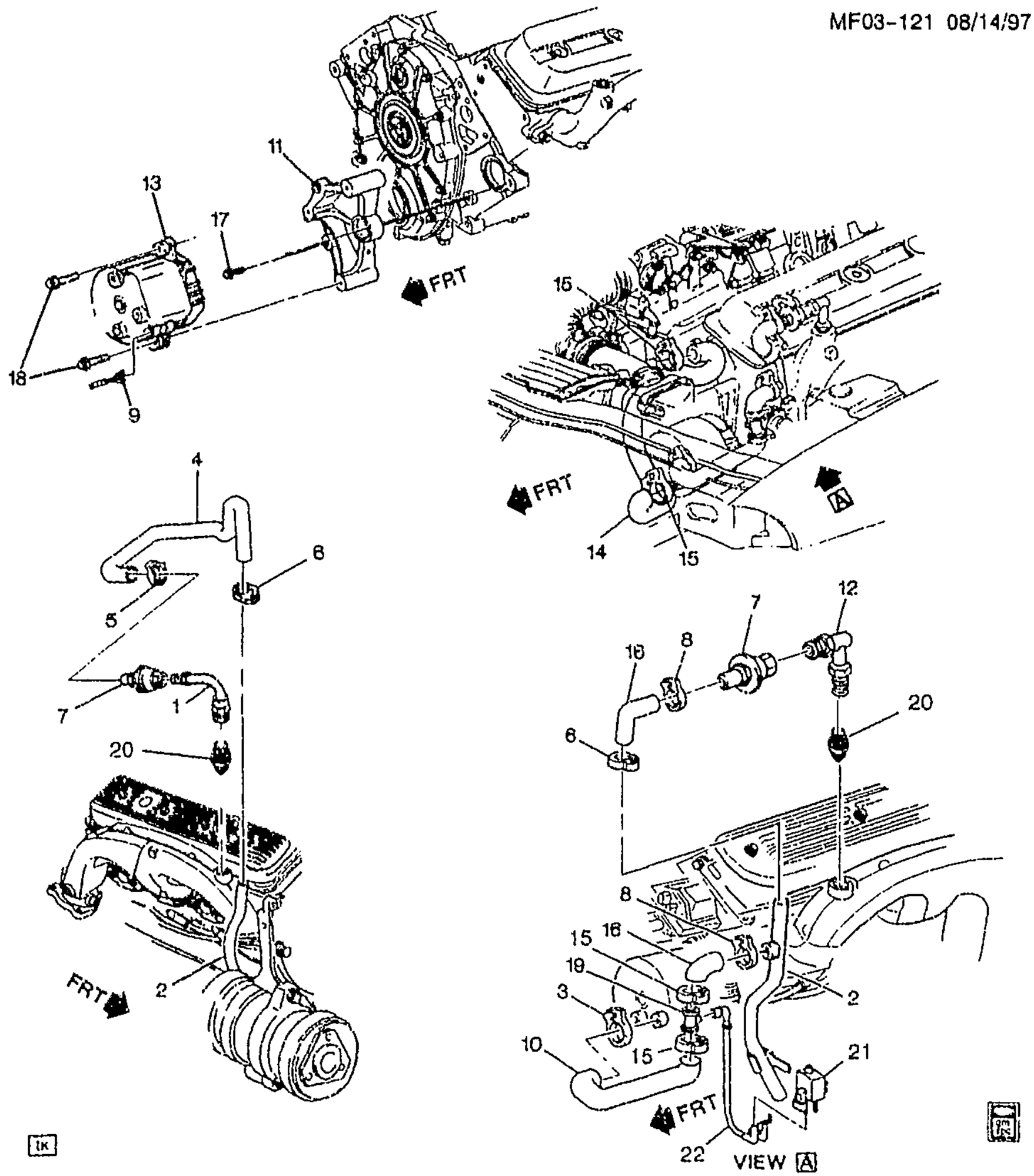

MF03-121

1996--1997 F A.I.R. PUMP & RELATED PARTS (LT1/5.7P)

1.	4-C21	3.675	PIPE, SECD AIR INJN (AC-DELCO #219-178)	96-97 F (LT1)	RH	12552899
2.	4-C21	3.675	PIPE, SECD AIR INJN (CROSSUNDER PIPE) (AC-DELCO #219-189)	96-97	1	12552789

cardiagn.com

3.		8.948	**CLAMP**, 28.6-86.2 DIA WORM GEAR (SECD AIR INJN PUMP HOSE) (AC-DELCO #12338017)	96-97	F	1	12338017
4.	4-C21	3.675	**HOSE**, SECD AIR INJN CHK VLV	96-97	F (LT1)	RH	12554957
5.		8.948	**CLAMP**, 28.6-86.2 DIA WORM GEAR (SECD AIR INJN CHK VLV HOSE) (AC-DELCO #12338017)	96-97	F	1	12338017
6.	4-C24	3.680	**CLAMP**, SECD AIR INJN CHK VLV PIPE CONN (1.762)	96-97	F (LT1)	2	1623010
7.	4-C12	3.670	**VALVE**, SECD AIR INJN CHK (AC-DELCO #214-419)	96-97	F (LT1)	2	22048212
8.		8.948	**CLAMP**, SIZE 6, .30MIN. - .87MAX - HEX/SLOTTED (SECD AIR INJN CHK VLV HOSE)	96-97	F	2	15620999
9.	4-C12	3.660	**CONNECTOR**, MOT-SECD AIR INJN PUMP (BLACK) (3-WAY F) (W/LEADS) (2.383) (AC-DELCO #PT420)	96-97	F	1	12117025
10.	4-C21	3.675	**HOSE**, SECD AIR INJN PUMP (INCLS 15, 16 & 19)	96-97	F (LT1)	1	12550917
11.	4-C11	3.655	**BRACKET**, SECD AIR INJN PUMP	96-97	F (LT1)	1	10215680
12.	4-C21	3.675	**PIPE**, SECD AIR INJN (AC-DELCO #219-177)	96-97	F (LT1)	LH	12552898
13.	4-C12	3.660	**PUMP**, SECD AIR INJN (AC-DELCO #215-133)	96-97	F (LT1)	1	12554580
14.	4-C21	3.675	**HOSE**, SECD AIR INJN PUMP (TO A/CLNR)	96-97	F (LT1)	1	10217102
15.		8.948	**CLAMP**, SIZE 6, .30MIN. - .87MAX - HEX/SLOTTED (PART OF 10)	96-97	F	3	15620999
16.	4-C24	3.680	**CONNECTOR**, SECD AIR INJN CHK VLV PIPE (AT PIPE) (PART OF 10) (3.675)	96-97	F (LT1)	1	10217106
17.		8.900	**BOLT**, HFH 3/8-16X1.12 280M ZP FULL THD .75-OD (SECD AIR INJN PUMP BRKT)	96-97	F	2	9440071
18.		8.900	**BOLT**, METRIC HEX FLG HD (M6X1X30) (POR 9.8) (SECD AIR INJN PUMP BRKT)	96-97	F	3	11514008
19.		N.S.	**VALVE**, SECD AIR INJN BL (PART OF 10)				
20.	4-C24	3.680	**CONNECTOR**, SECD AIR INJN CHK VLV PIPE	96-97	F	2	12552329
21.	4-C12	3.670	**VALVE**, SECD AIR INJN BL SOL (2 PORT VAC, 2 BLADE TERM) (3.130) (AC-DELCO #214-565)	96-97	F (LT1)	1	1997201
22.	4-C21	3.675	**HARNESS**, DCLR VLV VAC	96-97	F (LT1)	1	12552790

RPO DEFINITIONS
LT1 - ENGINE-GAS, 8 CYL., 5.7L(5.7P),MFI,HO

cardiagn.com

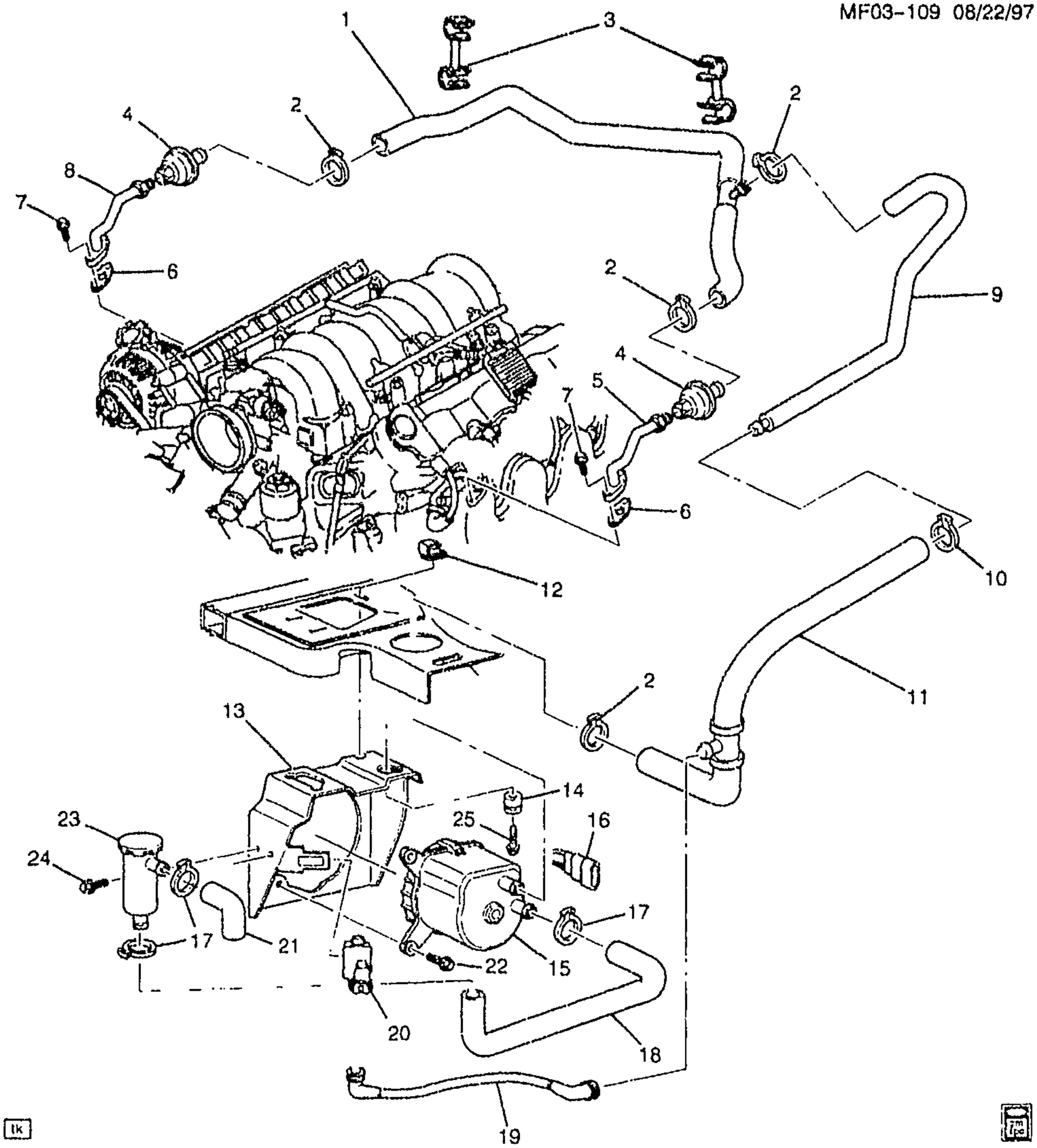

MF03-109

1998-1999 F A.I.R. PUMP & RELATED PARTS (LS1/5.7G)

1.	4-C21	3.675	HOSE, SECD AIR INJN CHK VLV (ASM INCLS: 3 HOSES, 2 CONNECTORS)	98 F (LS1)	1	12559200
	4-C21	3.675	HOSE, SECD AIR INJN CHK VLV .	99 F (LS1)	1	12559187

cardiagn.com

2.		8.948	**CLAMP**, SIZE 6, .30MIN. -- .87MAX - HEX/SLOTTED (SECD AIR INJN PUMP HOSE)	98-99	F	2	15620999
3.	4-C21	3.675	**STRAP**, SECD AIR INJN CHK VLV HOSE	98-99	F (LS1)	2	12557900
4.	4-C12	3.670	**VALVE**, SECD AIR INJN CHK (PART OF 5) (AC-DELCO #214-419)	98-99	F (LS1)	2	22048212
5.	4-C21	3.675	**PIPE**, SECD AIR INJN (INCLS 4) (AC-DELCO #219-233)	98	F (LS1)	LH	12556767
	4-C21	3.675	**PIPE**, SECD AIR INJN (INCLS 4) (AC-DELCO #219-244)	99	F (LS1)	LH	12559188
6.	4-C24	3.680	**GASKET**, SECD AIR INJN PIPE	98-99	F (LS1)	2	12553617
7.	4-C21	3.675	**BOLT**, SECD AIR INJN PIPE (M8X1.25X24.4) (20 THD) (0.056)	98-99	F (LS1)	4	12556127
8.	4-C21	3.675	**PIPE**, SECD AIR INJN (AC-DELCO #219-234)	98	F (LS1)	RH	12556768
	4-C21	3.675	**PIPE**, SECD AIR INJN (AC-DELCO #219-245)	99	F (LS1)	RH	12559189
9.	4-C21	3.675	**HOSE**, SECD AIR INJN PUMP	98-99	F (LS1)	1	12559199
	4-C21	3.675	**HOSE**, SECD AIR INJN PUMP (TO ENG)	98-99	F (LS1)	1	12559197
10.		8.950	**STRAP**, PLASTIC ADJ TIE (215MM LGTH) (RDO PWR ANT WRG HARN)	98-99	F	AR	11501906
11.	4-C21	3.675	**HOSE**, SECD AIR INJN PUMP (FRT)	98-99	F (LS1)	1	12559199
	4-C21	3.675	**HOSE**, SECD AIR INJN PUMP (TO ENG) (FRT)	98-99	F (LS1)	1	12559197
12.	4-C11	3.655	**NUT**, SECD AIR INJN PUMP BRKT (M6X1, 16.5X25.5) (W/WIRE PROTECTOR) (14.865)	98-99	F (LS1)	4	25602015
13.	4-C11	3.655	**BRACKET**, SECD AIR INJN PUMP (USE T/W 11516075 NUT)	98-99	F (LS1)	1	12560726
14.	4-C11	3.655	**INSULATOR**, SECD AIR INJN PUMP BRKT (NATURAL RUBBER) (O.D. DIA 22MM)	98-99	F (LS1)	4	12559192
15.	4-C12	3.660	**PUMP**, SECD AIR INJN (INCLS 16) (AC-DELCO #215-353)	98-99	F (LS1)	1	12559193
16.		N.S.	**CONNECTOR**, INLINE--TO FWD LP HARN (PART OF 15)				
17.	4-C21	3.675	**CLAMP**, SECD AIR INJN PUMP HOSE (1.762)	98-99	F (LS1)	3	1623010
18.	4-C21	3.675	**HOSE**, SECD AIR INJN PUMP (POA SECD A.I.R. PMP FRT BRKT)	98-99	F (LS1)	1	12559196
19.	4-C21	3.675	**HARNESS**, DCLR VLV VAC	98-99	F (LS1)	1	12556758
20.	4-C12	3.670	**VALVE**, SECD AIR INJN BL SOL (2 PORT VAC, 2 BLADE TERM) (3.130) (AC-DELCO #214-565)	98-99	F (LS1)	1	1997201
21.	4-C24	3.680	**CONNECTOR**, SECD AIR INJN CHK VLV PIPE (AT PIPE) (3.675)	98-99	F (LS1)	1	10217106
22.		8.977	**BOLT**, HEX W/WA, M6X1X35, 9.8, POR, 24 OD, ABPT (SECD AIR INJN PUMP)	98-99	F	3	11513947
23.	4-C12	3.670	**FILTER**, SECD AIR INJN PUMP A/CL	98-99	F (LS1)	1	12559195

cardiagn.com

						MF03-109
24.	8.977	BOLT, M6X1X13, 10 THD, 12.5 OD	98-99	F	1	11509699
25.	8.900	BOLT, METRIC HEX FLG HD (M6X1X30) (POR 9.8) (SECD AIR INJN PUMP)	98-99	F	4	11514008

RPO DEFINITIONS

LS1 – ENGINE GAS, 8 CYL, 5.7L, SFI, ALUMINUM ENGINE

cardiagn.com

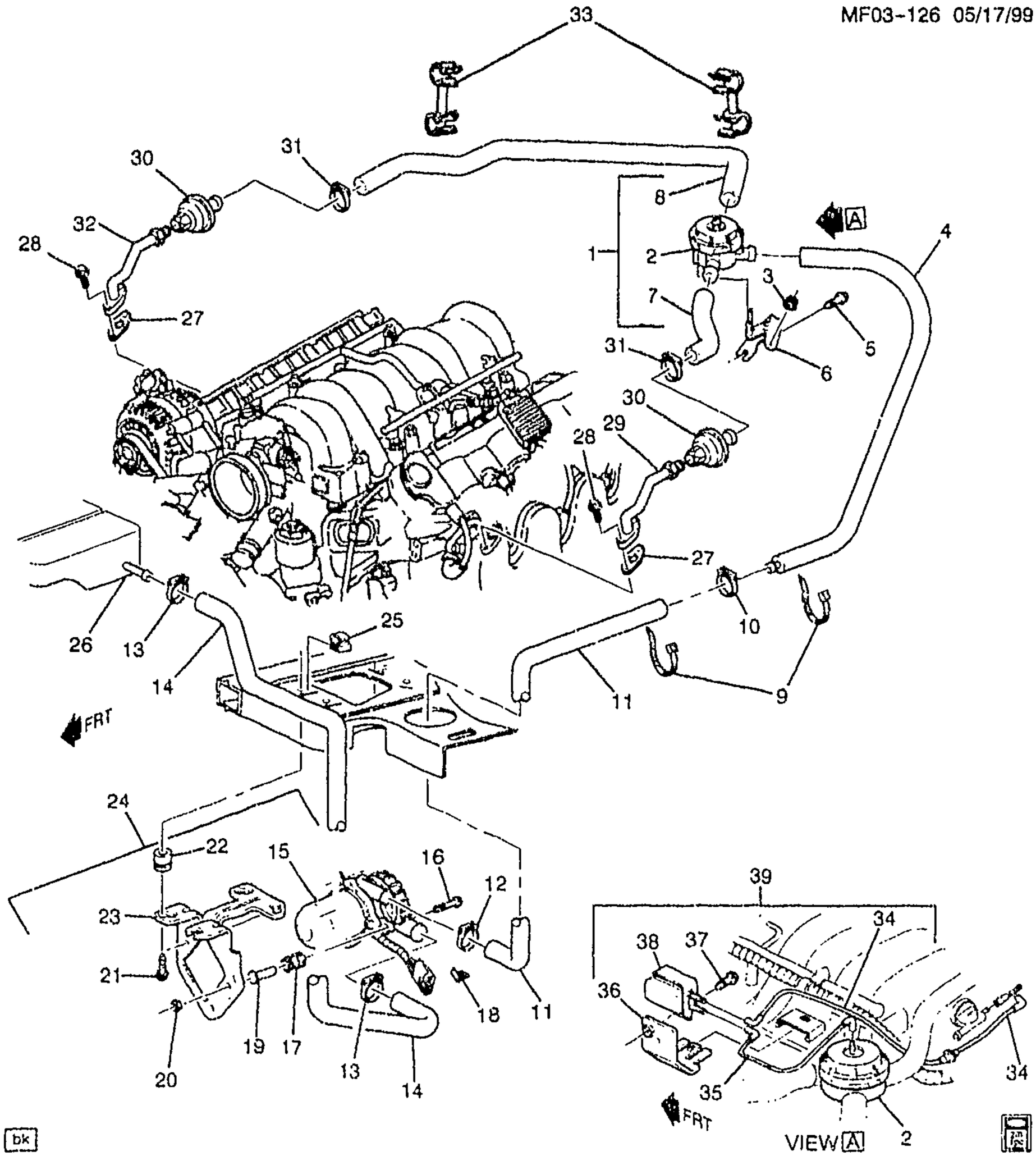

MF03-126

2000-2002 F A.I.R. PUMP & RELATED PARTS (LS1/5.7G)

1.		N.S.	VALVE, SECD AIR INJN SHUTOFF (INCLS 2, 6-8)			
2.	4-C12	3.670	VALVE, SECD AIR INJN SHUTOFF (PART OF 1)	00-02 F (LS1)	1	12563355

cardiagn.com

3.		8.917	NUT, HFH M6X1X6.5 ZOR 9 (SECD AIR INJN SW VLV BRKT)	00-02	F	1	3530297
4.	4-C21	3.675	HOSE, SECD AIR INJN PUMP	00-02	F	1	12561659
5.		8.900	BOLT, M10X1.5X20, 18 THD, 22.3 OD, 10.9 MAT (SECD AIR INJN SW VLV BRKT)	00-02	F	1	11515764
6.	4-C21	3.675	BRACKET, SECD AIR INJN SW VLV (PART OF 1)	00-02	F (LS1)	1	12562868
7.	4-C24	3.680	CONNECTOR, SECD AIR INJN PIPE (PART OF 1)	00-02	F	1	12562127
8.	4-C24	3.680	CONNECTOR, SECD AIR INJN PIPE (PART OF 1)	00-02	F	1	12562128
9.		8.950	STRAP, PLASTIC ADJ TIE (215MM LGTH) (SECD AIR INJN PUMP HOSE)	00-02	F	2	11501906
10.		8.950	STRAP, PLASTIC ADJ TIE (215MM LGTH) (RDO PWR ANT WRG HARN)	00-02	F	AR	11501906
11.	4-C21	3.675	HOSE, SECD AIR INJN PUMP	00-02	F	AR	12565133
12.	4-N6	1.166	CLAMP, WORM TYPE (.50" TO .97" DIA) (SECD AIR INJN PUMP HOSE) (8.948)	00-02	F	AR	1470029
13.	4-C24	3.680	CLAMP, SECD AIR INJN PUMP A/CL HOSE	00-02	F (LS1)	1	12561863
14.	4-C21	3.675	HOSE, SECD AIR INJN PUMP A/CL	00-02	F (LS1)	1	12562811
15.	4-C12	3.660	PUMP, SECD AIR INJN (PART OF 24) (AC-DELCO #215-414)	00-02	F (LS1)	1	12568241
16.	4-C11	3.655	BOLT, SECD AIR INJN PUMP (PART OF 24)	00-02	F (LS1)	3	15152297
17.	4-C11	3.655	INSULATOR, SECD AIR INJN PUMP (BUTYL RUBBER) (O.D. DIM 23.40MM) (PART OF 24) (CODE 7725)	00-02	F (LS1)	3	15007725
18.	4-N20	2.559	CLIP, SECD AIR INJN PMP WRG HARN (PART OF 24) (13.090) (AC-DELCO #12084149)	00-02	F	1	12084149
19.	4-C11	3.655	SPACER, SECD AIR INJN PUMP (PART OF 24) (CODE 7726)	00-02	F (LS1)	3	15007726
20.		N.S.	NUT, SECD AIR INJN PUMP (PART OF 24)				
21.		8.900	BOLT, METRIC HEX FLG HD (M6X1X30) (POR 9.8) (SECD AIR INJN PUMP BRKT)	00-02	FA	AR	11514008
22.	4-C11	3.655	INSULATOR, SECD AIR INJN PUMP BRKT (NATURAL RUBBER) (O.D. DIA 22MM) (PART OF 24)	00-02	F (LS1)	4	12559192
23.	4-C11	3.655	BRACKET, SECD AIR INJN PUMP (PART OF 24)	00-02	F (LS1)	1	12562810
24.		N.S.	PUMP, SECD AIR INJN (W/BRKT) (INCLS 15-20, 22, 23)				
25.	4-C11	3.655	NUT, SECD AIR INJN PUMP BRKT (M6X1, 16.5X25.5) (W/WIRE PROTECTOR) (14.865)	00-02	F (LS1)	4	25602015

cardiagn.com

26.		N.S.	DUCT, A/CL OTLT (W/RESO & INT AIR TEMP SEN) (SEE GROUP 3, 000 "AIR INTAKE SYSTEM" FOR DETAILED ILLUSTRATED VIEW)				
27.	4-C24	3.680	GASKET, SECD AIR INJN PIPE	00-02	F (LS1)	2	12553617
28.	4-C24	3.680	BOLT, SECD AIR INJN CHK VLV PIPE (M8X1.25X24.4) (20 THD) (0.056)	00-02	F (LS1)	4	12556127
29.	4-C21	3.675	PIPE, SECD AIR INJN (INCLS 30) (AC-DELCO #219-326)	00-02	F (LS1)	LH	12565501
30.	4-C12	3.670	VALVE, SECD AIR INJN CHK (PART OF 29, 32) (AC-DELCO #214-1045)	00-02	F (LS1)	1	12565503
31.		8.948	CLAMP, SIZE 6, .30MIN. - .87MAX - HEX/SLOTTED (SECD AIR INJN CHK)	00-02	F	2	15620999
32.	4-C21	3.675	PIPE, SECD AIR INJN (INCLS 30) (AC-DELCO #219-327)	00-02	F (LS1)	RH	12565502
33.	4-C21	3.675	CLIP, SECD AIR INJN CHK VLV HOSE	00-02	F (LS1)	2	12557900
34.	4-C21	3.675	HARNESS, SECD AIR INJN SHUTOFF VLV VAC (PART OF 39)	00-02	F	1	12562871
35.	4-C21	3.675	HARNESS, SECD AIR INJN SHUTOFF VLV VAC (PART OF 39)	00-02	F	1	12562870
36.	4-C20	3.671	BRACKET, SECD AIR INJN VAC CONT SOL VLV (PART OF 39)	00-02	F (LS1)	1	12562872
37.	4-C20	3.671	BOLT, SECD AIR INJN SHUTOFF VLV VAC CONT SOL VLV (PART OF 39) (M6X12) (3.602)	00-02	F (LS1)	6	10228350
38.	4-C12	3.670	SOLENOID, SECD AIR INJN SW VLV SOL VLV (PART OF 39)	00-02	F (LS1)	1	1997272
39.		N.S.	BRACKET, SECD AIR INJN VAC CONT SOL VLV (INCLS 34-38)				

RPO DEFINITIONS
LS1 – ENGINE GAS, 8 CYL, 5.7L, SFI, ALUMINUM ENGINE

cardiagn.com

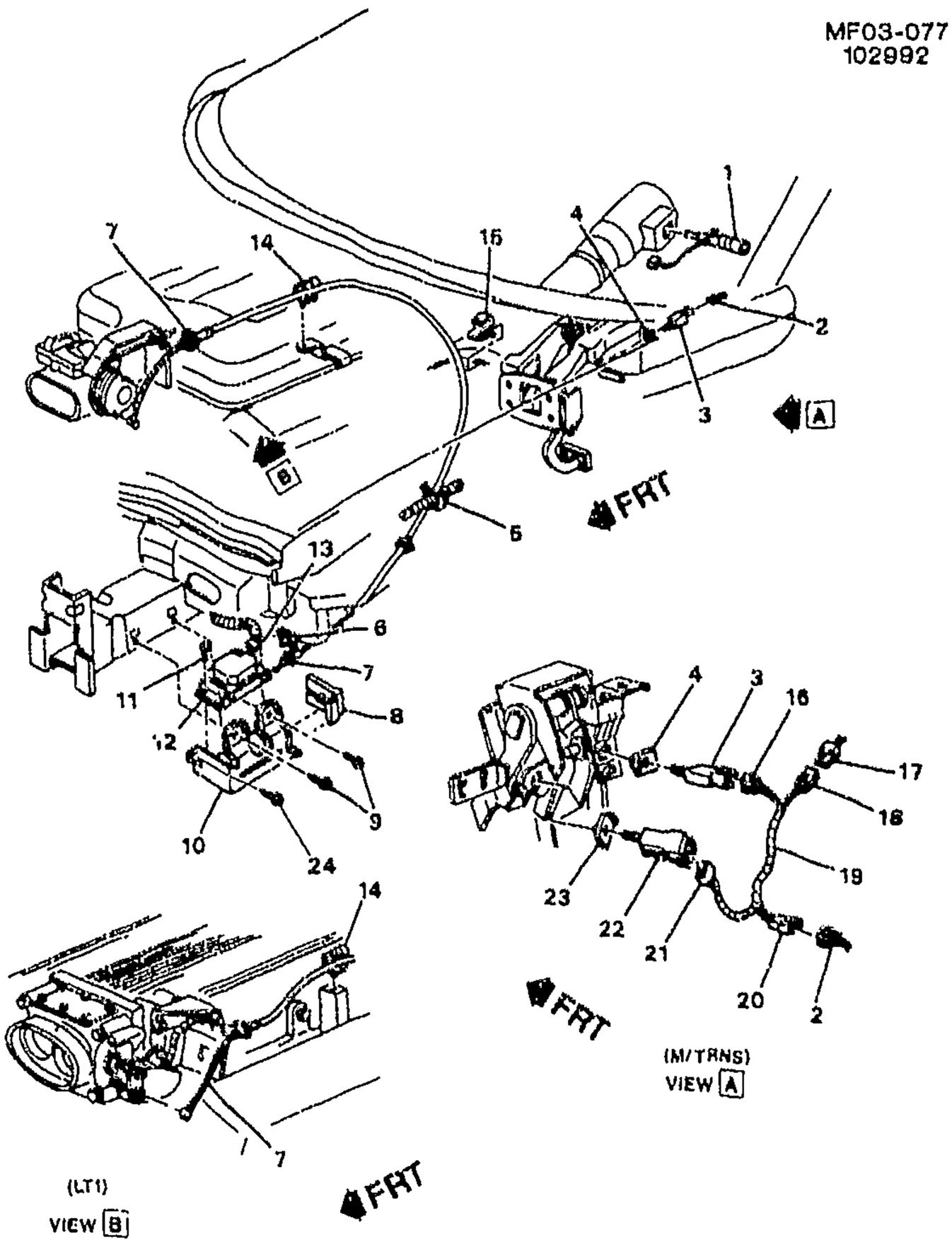

MF03-077

1993 F CRUISE CONTROL (K34)

1.	4-N22	2.897	LEVER, T/SIG & HDLP D/SW & CRCONT ACTR & WSW & WSWA (AC--DELCO #25140540)	93 F (K34) (EXC UK2)	1	25140540
	4-N22	2.897	LEVER, T/SIG & HDLP D/SW & CRCONT ACTR & WSW & WSWA (AC-DELCO #25140540)	93 F (K34, UK2) (EXPORT)	1	25140540
2.	4-D13	3.887	CONNECTOR, SW-CRCONT REL (GRAY) (2-WAY F W/LEADS) (INDEX TAB CTR CAVITY A&B) (2.535) (AC-DELCO #PT217)	93 F	1	12101625

cardiagn.com

3.	4-D13	3.887	SWITCH, CRCONT REL (BRK SW LOC) (W/RET) (INCLS 4)	93	F (K34)	1	10248347
4.	4-D13	3.887	RETAINER, CRCONT REL SW (PART OF 3) (3.885)	93	F (K34)	1	10194431
5.		N.S.	CLIP, CRCONT SERVO CBL				
6.	4-D12	3.885	RETAINER, CRCONT SERVO (AC-DELCO #10192278)	93	F (K34)	1	10192278
7.	4-D11	3.880	CABLE, CRCONT SERVO (INCLS 15)	93	F (LT1, K34)	1	12550719
	4-D11	3.880	CABLE, CRCONT SERVO (INCLS 15)	93	F (L32, K34)	1	12550720
8.	4-D12	3.885	COVER, CRCONT SERVO (AC-DELCO #10195513)	93	F (K34)	1	10195513
9.		8.900	BOLT/SCREW, HEX FL WA, M6X1X25, 17 OD, 6202M STL, 7111M, MACH (CRCONT MDL BRKT)	93		AR	11516413
10.	4-D12	3.885	BRACKET, CRCONT MDL	93	F (K34)	1	10195575
11.	4-D12	3.885	BOLT, CRCONT SERVO (M6X1.0X34.35) (10.152)	93	F (K34)	3	10222298
12.	4-D13	3.887	MODULE, CRCONT (AC-DELCO #25140793)	93	F (K34)	1	25140793
13.	4-D13	3.887	CONNECTOR, MDL-CRCONT (BLACK) (10--WAY F) (W/LEADS) (2.530) (AC-DELCO #PT588)	93	F	1	12125676
14.	4-A26	3.425	CLIP, ACCEL CONT CBL (13.090)	93	F	1	20038997
15.		N.S.	CLIP, CRCONT SERVO CBL (PART OF 7)				
16.	4-D13	3.887	CONNECTOR, SW-CRCONT REL (W/LEADS) (PART OF 19) (GRAY) (2-WAY F W/LEADS) (INDEX TAB CTR CAVITY A&B) (2.535) (AC-DELCO #PT217)	93	F	1	12101825
17.		N.S.	CONNECTOR, INLINE-TO I/P HARN				
18.		N.S.	CONNECTOR, INLINE-TO I/P HARN (PART OF 19)				
19.	4-D13	3.887	HARNESS, CRCONT WRG (INCLS 16, 18, 20, 21)	93	F (L32, M49)	1	12113914
	4-D13	3.887	HARNESS, CRCONT WRG (INCLS 16, 18, 20, 21)	93	F (LT1, M28, M29, K34)	1	12113916
20.	4-D13	3.887	CONNECTOR, CRCONT HARN (PART OF 19) (BLACK) (4-WAY M) (2.535)	93	F	1	12085206
	4-D13	3.887	CONNECTOR, CRCONT HARN (PART OF 19) (GREEN) (2-WAY M) (14.875)	93	F	1	12117275
21.	4-D13	3.887	CONNECTOR, SW-CRCONT REL (PART OF 19) (GRAY) (2-WAY F W/LEADS) (INDEX TAB CTR CAVITY A&B) (2.535) (AC-DELCO #PT217)	93	F	1	12101825
	4-D13	3.887	CONNECTOR, SW-CRCONT REL (PART OF 19) (4-WAY F) (W/LEADS) (9.764) (AC-DELCO #PT483)	93	F	1	12117350

cardiagn.com

	4-D13	3.887	**CONNECTOR**, SW-CRCONT REL (PART OF 19) (6-WAY F W/LEADS) (13.090) (AC-DELCO #PT1032)	93	F	1	15305888
	4-D13	3.887	**CONNECTOR**, SW-CRCONT REL (PART OF 19) (6-WAY F W/LEADS) (13.090) (AC-DELCO #PT1032)	93	F (MM5, U82, Z49) (EXPORT)	1	15305888
22.	4-D12	3.883	**SWITCH**, CRCONT (INCLS 23) (W/RET) (3.887) (AC-DELCO #10195523)	93	F (M49, K34)	1	10195523
	4-D12	3.883	**SWITCH**, CRCONT (CLU SW) (INCLS 23) (3.887)	93	F (LT1, K34, M28, M29)	1	10248347
23.	4-D13	3.887	**RETAINER**, CRCONT REL SW (PART OF 22) (3.885)	93	F (K34)	1	10194431
24.		8.977	**BOLT**, SCR HEX W/FLAT WA 12 DIA TYPE AB (CRCONT MDL BRKT)	93	.....	1	11509374

RPO DEFINITIONS

K34 – CRUISE CONTROL,AUTOMATIC,ELECTRONIC
LT1 – ENGINE-GAS, 8 CYL, 5.7L(5.7P),MFI,HO
L32 – ENGINE,3.4L,V6,(3.4S),SFI,OHV
MM5 – TRANSMISSION,MANUAL 5--SPEED PROVISIONS(MERCHANDISING OPTION)
M28 – TRANSMISSION MAN, 6 SPD, BORG WARNER, 85MM, 3.36 1ST, 1.35 3RD
M29 – TRANSMISSION MAN, 6 SPD, BORG WARNER, 85MM, 2.97 1ST, 1.44 3RD
M49 – TRANSMISSION MAN 5 SPD, BORG WARNER, 77MM, 3.75 1ST, .76 5TH, O/D
UK2 – LEVER,DIRECTIONAL SIGNAL(EXPORT)
U82 – SPEAKER SYSTEM 3, DUAL DR MTD, RR PKG SHELF
Z49 – MANDATORY CANADIAN BASE EQUIPMENT MODIFICATIONS(CANADIAN)

cardiagn.com

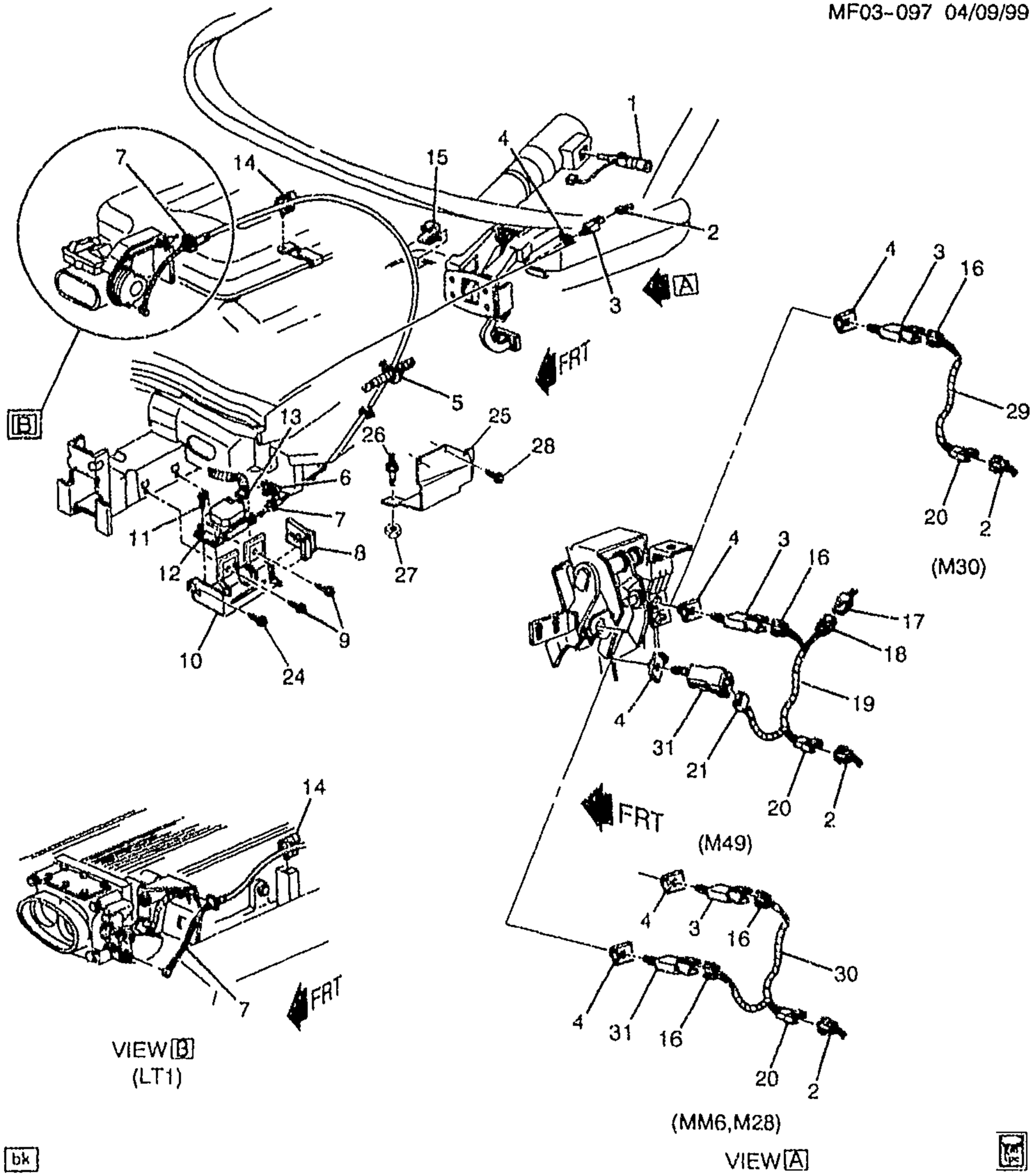

MF03-097

1994 F CRUISE CONTROL (K34)
1995-1997 F CRUISE CONTROL (K34,EXC NW9)

1.	4--N22	2.897	LEVER, T/SIG & HDLP D/SW & CRCONT ACTR & WSW & WSWA (AC-DELCO #25140743)	94-97 F (K34) (EXC UK2)	1	25140743

cardiagn.com

	4–N22	2.897	**LEVER**, T/SIG & HDLP D/SW & CRCONT ACTR & WSW & WSWA (AC–DELCO #25140540)	94–97	F (K34, UK2) (EXPORT)	1	25140540
2.	4–D13	3.887	**CONNECTOR**, INLINE–TO CRCONT SW HARN (GRAY) (2–WAY F W/LEADS) (INDEX TAB CTR CAVITY A&B) (2.535) (AC–DELCO #PT217)	94–97	F	1	12101825
3.	4–D13	3.887	**SWITCH**, CRCONT REL (W/O RET)	94–97	F (K34)	1	22584374
4.	4–D13	3.887	**RETAINER**, CRCONT REL SW (3.885)	94–97	F (K34)	1	10194431
5.		N.S.	**CLIP**, CRCONT SERVO CBL		.....		
6.	4–D12	3.885	**RETAINER**, CRCONT SERVO (AC–DELCO #10192278)	94–97	F (K34)	1	10192278
7.	4–D11	3.880	**CABLE**, CRCONT SERVO (INCLS 15)	94	F (LT1, K34)	1	12550719
	4–D11	3.880	**CABLE**, CRCONT SERVO (INCLS 15)	94	F (L32, K34)	1	12550720
	4–D11	3.880	**CABLE**, CRCONT SERVO (INCLS 15)	95	F (LT1, K34) (EXC NW9)	1	12550719
	4–D11	3.880	**CABLE**, CRCONT SERVO (INCLS 15)	95	F (L32, K34)	1	12553257
	4–D11	3.880	**CABLE**, CRCONT SERVO (INCLS 15)	95–96	F (L36, K34)	1	12554095
	4–D11	3.880	**CABLE**, CRCONT SERVO (INCLS 15)	96	F (LT1, K34) (EXC NW9)	1	12551470
	4–D11	3.880	**CABLE**, CRCONT SERVO (INCLS 15)	96	F (L36, M49, K34)	1	12552516
	4–D11	3.880	**CABLE**, CRCONT SERVO (INCLS 15)	97	F (L36, M30, K34)	1	12558779
	4–D11	3.880	**CABLE**, CRCONT SERVO (INCLS 15)	97	F (L36, M49, K34)	1	12558780
	4–D11	3.880	**CABLE**, CRCONT SERVO (INCLS 15)	97	F (LT1, K34) (EXC NW9)	1	12558781
8.	4–D12	3.885	**COVER**, CRCONT SERVO (AC–DELCO #10195513)	94–97	F (K34)	1	10195513
9.		N.S.	**CLAMP**, A/CL OTLT RR DUCT ...		.....		
10.	4–D12	3.885	**BRACKET**, CRCONT MDL	94–97	F (K34)	1	10195575
11.	4–D12	3.885	**BOLT**, CRCONT SERVO (M6X1.0X34.35) (10.152)	94–97	F (K34)	3	10222298
12.	4–D13	3.887	**MODULE**, CRCONT (AC–DELCO #25140793)	94–97	F (LT1, K34)	1	25140793
	4–D13	3.887	**MODULE**, CRCONT (AC–DELCO #25140793)	94	F (L32, M30, K34) (EXC J1F)	1	25140793
	4–D13	3.887	**MODULE**, CRCONT	94–95	F (L32, M49, K34)	1	25162757
	4–D13	3.887	**MODULE**, CRCONT (AC–DELCO #25140793)	95	F (L32, M30, K34) (EXC LAC)	1	25140793
	4–D13	3.887	**MODULE**, CRCONT	95–97	F (L36, K34)	1	25140823
	4–D13	3.887	**MODULE**, CRCONT	94	F (L32, M30, J1F, K34) (EXPORT)	1	25162757
	4–D13	3.887	**MODULE**, CRCONT	95	F (L32, M30, K34, LAC) (EXPORT)	1	25162757
13.	4–D13	3.887	**CONNECTOR**, MDL–CRCONT (BLACK) (10–WAY F) (W/LEADS) (2.530) (AC–DELCO #PT588) ...	94–97	F	1	12125676
14.	4–A28	3.425	**CLIP**, ACCEL CONT CBL (13.090)	94	F	1	20038997
	4–A28	3.425	**CLIP**, ACCEL CONT CBL	95–97	F (L36)	1	12555983

cardiagn.com

	4–A28	3.425	CLIP, ACCEL CONT CBL (13.090)	95–97	F (LT1)	1	20038997
	4–A28	3.425	CLIP, ACCEL CONT CBL (13.090)	95	F (L32)	1	20038997
15.		N.S.	CLIP, CRCONT SERVO CBL (PART OF 7)				
16.	4–D13	3.887	CONNECTOR, SW–CRCONT REL (W/LEADS) (PART OF 19, 29, 30) (BLACK) (2–WAY F) (W/LEADS) (2.530) (AC–DELCO #PT733)	94–97	F	AR	12126463
17.		N.S.	CONNECTOR, INLINE–TO I/P HARN				
18.		N.S.	CONNECTOR, INLINE–TO I/P HARN (PART OF 19)				
19.	4–D13	3.887	HARNESS, CRCONT WRG (INCLS 16, 18, 20, 21) (TAPE BACK EXTRA CONN ON M30 APPLICATION)	94–95	F (L32, M49, K34)	1	12145111
	4–D13	3.887	HARNESS, CRCONT WRG (INCLS 16, 18, 20, 21) (TAPE BACK EXTRA CONN ON M30 APPLICATION)	96–97	F (L36, M49, K34)	1	12145111
20.	4–N14	2.530	CONNECTOR, INLINE–TO FWD LP HARN (PART OF 19, 29, 30) (BLACK) (10–WAY F) (W/LEADS) (AC–DELCO #PT588)	94–97	F	1	12125676
	4–N14	2.530	CONNECTOR, INLINE–TO FWD LP HARN (PART OF 19, 29, 30) (GREEN) (2–WAY M) (14.875)	94–97	F	1	12117275
	4–N14	2.530	CONNECTOR, INLINE–TO FWD LP HARN (PART OF 19, 29, 30) (6–WAY F) (W/LEADS) (2.535) (AC–DELCO #PT246)	95	F	2	12101854
	4–N14	2.530	CONNECTOR, INLINE–TO FWD LP HARN (PART OF 19, 29, 30) (WHITE) (8–WAY F) (W/LEADS) (2.535) (AC–DELCO #PT444)	95–97	F (L36)	1	12117271
	4–N14	2.530	CONNECTOR, INLINE–TO FWD LP HARN (PART OF 19, 29, 30) (WHITE) (8–WAY F) (W/LEADS) (2.535) (AC–DELCO #PT444)	96–97	F (LT1)	1	12117271
	4–N14	2.530	CONNECTOR, INLINE–TO FWD LP HARN (PART OF 19, 29, 30) (GREY) (2–WAY F, M/P 150 SLD W/LEADS) (4.710) (AC–DELCO #PT1357)	95–97	F	1	15306302
21.	4–D13	3.887	CONNECTOR, SW–CRCONT REL (PART OF 19) (BLACK) (2–WAY F) (W/LEADS) (2.530) (AC–DELCO #PT733)	94–97	F	AR	12126463
22.	4–D12	3.883	SWITCH, CRCONT (W/RET) (3.887) (AC–DELCO #10195523)	94–97	F (M49, K34)	1	10195523
24.		8.977	BOLT, SCR HEX W/FLAT WA 12 DIA TYPE AB (CRCONT MDL BRKT)	94–97		1	11509374
25.	4–D12	3.885	SHIELD, CRCONT MDL	94–97	F (K34)	1	12550734
26.	4–N24	7.242	STUD, FRT STAB SHF INSL CLA	94–96	F (K34)	1	10254770
	4–N24	7.242	STUD, FRT STAB SHF INSL CLA	97	F	1	10254770

cardiagn.com

27.		8.917	NUT, HFH, M8X1.25, 17.9 OD, 738 THK, 13MM HEX, 10, ZF (CRCONT MDL) (8.915) (AC-DELCO #11514596)	94-97	F	1	11514596
28.		8.977	SCREW, 6.3X1.81X20 (CRCONT MDL)	94-97	F	2	11509051
29.	4-D13	3.887	HARNESS, CRCONT WRG (INCLS 16, 20) (TAPE BACK EXTRA CONN ON M30 APPLICATION)	94-97	F (M30, K34)	1	12145111
30.	4-D13	3.887	HARNESS, CRCONT WRG (INCLS 16, 20, 32)	94-97	F (LT1, MM6, K34)	1	12145113
31.	4-D12	3.883	SWITCH, CRCONT (W/RET) (3.887)	94-97	F (K34, MM6, M30)	1	10212750
	4-D12	3.883	SWITCH, CRCONT (W/O RET) (3.887)	94-97	F (K34, MM6)	1	22584374

RPO DEFINITIONS
J1F – BRAKE,SPECIAL(EXPORT)
K34 – CRUISE CONTROL,AUTOMATIC,ELECTRONIC
LAC – MODULE CRUISE CONTROL
LT1 – ENGINE–GAS, 8 CYL, 5.7L(5.7P),MFI,HO
L32 – ENGINE,3.4L,V6,(3.4S),SFI,OHV
L36 – ENGINE GAS, 6 CYL, 3.8K, MFI, V6, HO (ERV6 SERIES)
MM6 – TRANSMISSION MAN 6 SPD, BORG WARNER, 85MM, 1ST 2.66, 6TH 0.50, O/D
M30 – TRANSMISSION,AUTOMATIC 4 SPEED,4L60E,ELECTRONIC
M49 – TRANSMISSION MAN 5 SPD, BORG WARNER, 77MM, 3.75 1ST, .76 5TH, O/D
NW9 – TRACTION CONTROL ELECTRONIC
UK2 – LEVER,DIRECTIONAL SIGNAL(EXPORT)

cardiagn.com

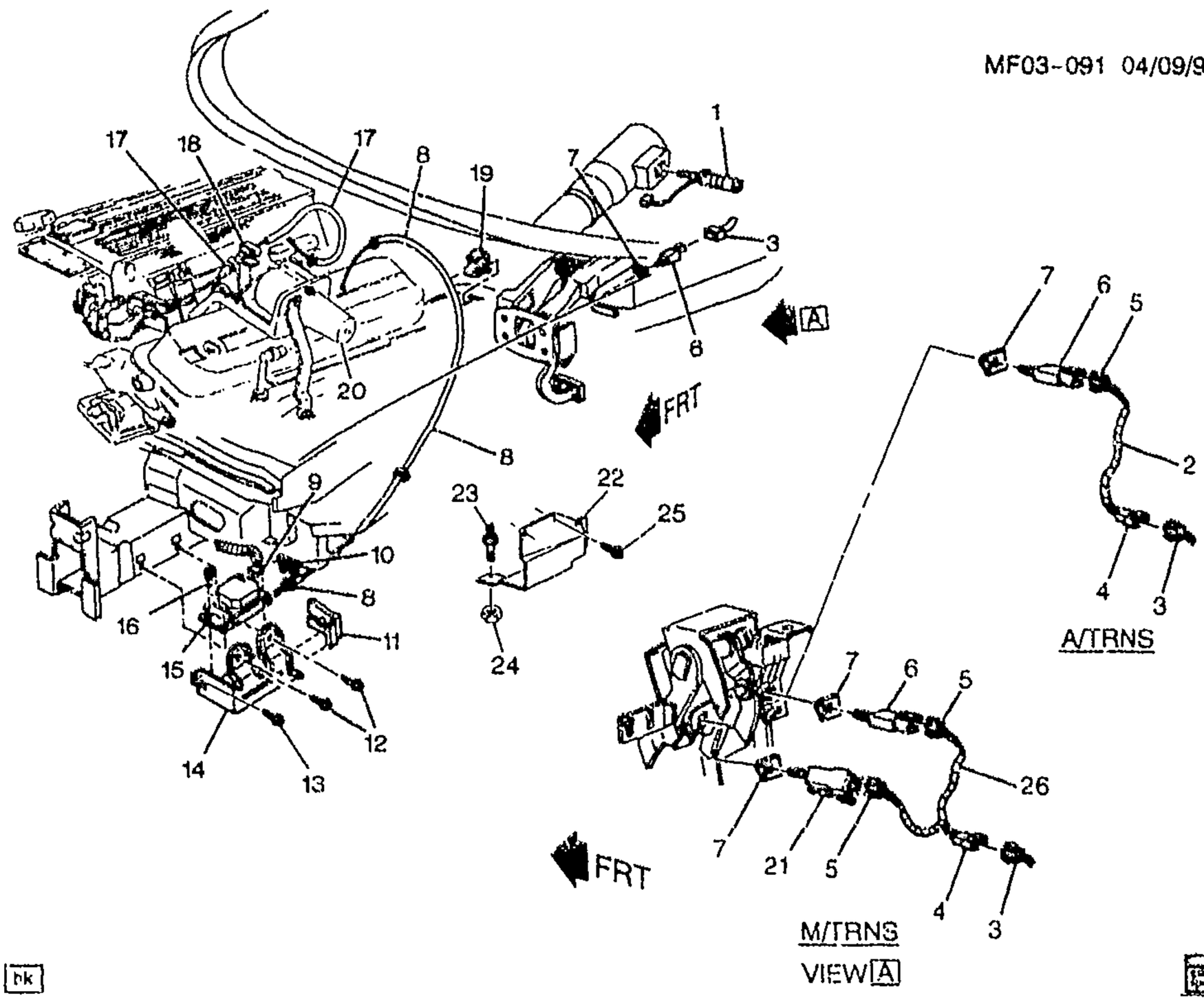

MF03-091

1995-1997 F CRUISE CONTROL (K34,NW9)

1.	4-N22	2.897	LEVER, T/SIG & HDLP D/SW & CRCONT ACTR & WSW & WSWA (AC-DELCO #25140743)	95-97	F (K34) (EXC UK2)	1	25140743
	4-N22	2.897	LEVER, T/SIG & HDLP D/SW & CRCONT ACTR & WSW & WSWA (AC-DELCO #25140540)	95-97	F (K34, UK2) (EXPORT)	1	25140540
2.	4-D13	3.887	HARNESS, CRCONT WRG (INCLS 4, 5) (TAPE BACK EXTRA CONN ON M30 APPLICATION) ..	95-97	F (M30, K34)	1	12145111
3.	4-D13	3.887	CONNECTOR, INLINE-TO CRCONT SW HARN (GRAY) (2-WAY F W/LEADS) (INDEX TAB CTR CAVITY A&B) (2.535) (AC-DELCO #PT217)	95-97	F	1	12101825
4.	4-N14	2.530	CONNECTOR, INLINE-TO FWD LP HARN (PART OF 2, 26) (GREEN) (2-WAY M) (14.875) ...	95-97	.....		12117275

cardiagn.com

5.	4-D13	3.887	CONNECTOR, SW-CRCONT REL (PART OF 2, 26) (BLACK) (2-WAY F) (W/LEADS) (2.530) (AC-DELCO #PT733)	95-97	F	AR	12126463
6.	4-D13	3.887	SWITCH, CRCONT REL (W/O RET)	95-97	F (K34)	1	22584374
7.	4-D13	3.887	RETAINER, CRCONT REL SW (3.885)	95-97	F (K34)	1	10194431
8.	4-D11	3.880	CABLE, CRCONT SERVO (INCLS 19)	95-96	F (LT1, K34, NW9)	1	10186849
	4-D11	3.880	CABLE, CRCONT SERVO (INCLS 19)	95-96	F (L36, K34)	1	12554095
	4-D11	3.880	CABLE, CRCONT SERVO (INCLS 19)	96	F (L36, M49, K34)	1	12552516
	4-D11	3.880	CABLE, CRCONT SERVO (INCLS 19)	97	F (LT1, K34, NW9)	1	12554596
	4-D11	3.880	CABLE, CRCONT SERVO (INCLS 19)	97	F (L36, M30, K34)	1	12558779
	4-D11	3.880	CABLE, CRCONT SERVO (INCLS 19)	97	F (L36, M49, K34)	1	12558780
9.	4-D13	3.887	CONNECTOR, MDL-CRCONT (BLACK) (10-WAY F) (W/LEADS) (2.530) (AC-DELCO #PT588)	95-97	F	1	12125876
10.	4-D12	3.885	RETAINER, CRCONT SERVO (AC-DELCO #10192278)	95-97	F (K34)	1	10192278
11.	4-D12	3.885	COVER, CRCONT SERVO (AC-DELCO #10195513)	95-97	F (K34)	1	10195513
12.		8.900	BOLT/SCREW, HEX FL WA, M6X1X25, 17 OD, 6202M STL, 7111M, MACH (CRCONT MDL BRKT)	95-97		AR	11516413
13.		8.977	BOLT, SCR HEX W/FLAT WA 12 DIA TYPE AB (CRCONT MDL BRKT)	95-97	F	1	11509374
14.	4-D12	3.885	BRACKET, CRCONT MDL	95-97	F (K34)	1	10195575
15.	4-D13	3.887	MODULE, CRCONT (AC-DELCO #25140793)	95-97	F (LT1, K34)	1	25140793
	4-D13	3.887	MODULE, CRCONT	95	F (L32, M49, K34)	1	25162757
	4-D13	3.887	MODULE, CRCONT (AC-DELCO #25140793)	95	F (L32, M30, K34) (EXC LAC)	1	25140793
	4-D13	3.887	MODULE, CRCONT	95-97	F (L36, K34)	1	25140823
	4-D13	3.887	MODULE, CRCONT	95	F (L32, M30, K34, LAC) (EXPORT)	1	25162757
16.	4-D12	3.885	BOLT, CRCONT SERVO (M6X1.0X34.35) (10.152)	95-97	F (K34)	3	10222298
17.	4-A28	3.430	CABLE, THROT LVR	97	F (LT1, NW9)	1	12558642
	4-A28	3.430	CABLE, THROT LVR (BTWN THROT BODY & THROT RELAXER)	95-96	F (LT1, NW9)	1	10186850
18.	4-A28	3.425	CLIP, ACCEL CONT CBL	95-97	F (L36)	1	12555983
	4-A28	3.425	CLIP, ACCEL CONT CBL (13.090)	95-97	F (LT1)	1	20038997
	4-A28	3.425	CLIP, ACCEL CONT CBL (13.090)	95	F (L32)	1	20038997
19.		N.S.	CLIP, CRCONT SERVO CBL (PART OF 8)				

cardiagn.com

							MF03-091
20.		N.S.	ADJUSTER, ACCEL CONT & CRCONT SERVO CBL (SEE ACCELERATOR CONTROL ILLUSTRATION IN GRP. 3.000 FOR DETAILED VIEW.)		.....		10236749
21.	4-D12	3.883	SWITCH, CRCONT (W/RET) (3.887) (AC-DELCO #10195523)	95-97	F (M49, K34)	1	10195523
22.	4-D12	3.885	SHIELD, CRCONT MDL	95-97	F (K34)	1	12550734
23.	4-N24	7.242	STUD, FRT STAB SHF INSL CLA	95-96	F (K34)	1	10254770
	4-N24	7.242	STUD, FRT STAB SHF INSL CLA	97	F	1	10254770
24.		8.917	NUT, HFH, M8X1.25, 17.9 OD, 738 THK, 13MM HEX, 10, ZF (CRCONT MDL) (8.915) (AC-DELCO #11514596)	95-97	F	1	11514596
25.		8.977	SCREW, 6.3X1.81X20 (CRCONT MDL)	95-97	F	2	11509051
26.	4-D13	3.887	HARNESS, CRCONT WRG (INCLS 4, 5)	95-97	F (LT1, MM6, K34)	1	12145113

RPO DEFINITIONS

K34 – CRUISE CONTROL,AUTOMATIC,ELECTRONIC
LAC – MODULE CRUISE CONTROL
LT1 – ENGINE-GAS, 8 CYL, 5.7L(5.7P),MFI,HO
L32 – ENGINE,3.4L,V6,(3.4S),SFI,OHV
L36 – ENGINE GAS, 6 CYL, 3.8K, MFI. V6, HO (ERV6 SERIES)
MM6 – TRANSMISSION MAN 6 SPD, BORG WARNER, 85MM, 1ST 2.66, 6TH 0.50, O/D
M30 – TRANSMISSION,AUTOMATIC 4 SPEED,4L60E,ELECTRONIC
M49 – TRANSMISSION MAN 5 SPD, BORG WARNER, 77MM, 3.75 1ST, .76 5TH, O/D
NW9 – TRACTION CONTROL ELECTRONIC
UK2 -- LEVER,DIRECTIONAL SIGNAL(EXPORT)

cardiagn.com

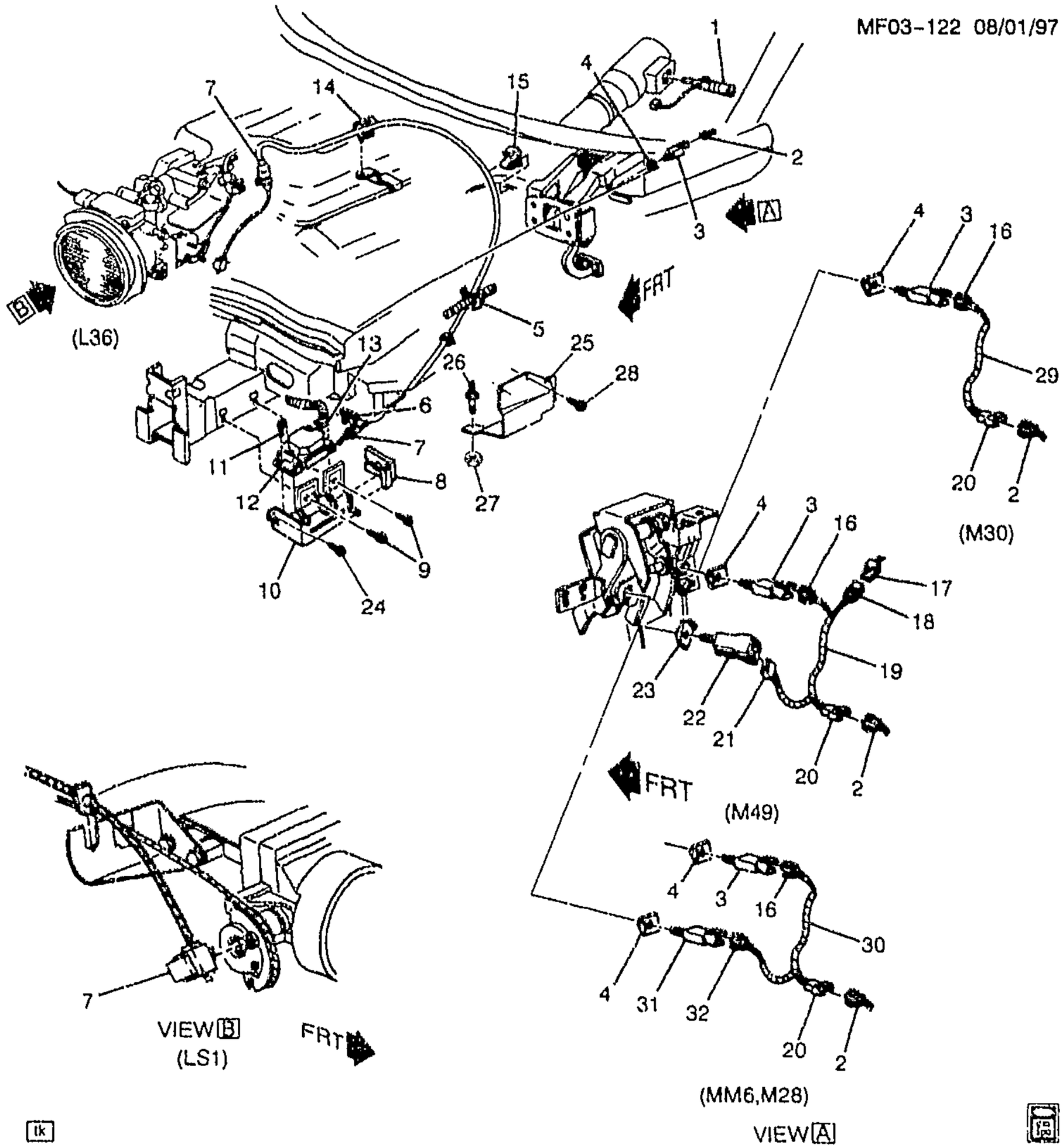

MF03-122

1998-2002 F CRUISE CONTROL (K34,EXC NW9)

1.	4-N22	2.897	**LEVER**, T/SIG & HDLP D/SW & CRCONT ACTR & WSW & WSWA (AC-DELCO #25140743)	98-02 F (K34) (EXC UK2)	1	25140743
	4-N22	2.897	**LEVER**, T/SIG & HDLP D/SW & CRCONT ACTR & WSW & WSWA (AC-DELCO #25140540)	98-02 F (K34, UK2) (EXPORT)	1	25140540

cardiagn.com

2.	4-D13	3.887	CONNECTOR, INLINE-TO CRCONT SW HARN (GRAY) (2-WAY F W/LEADS) (INDEX TAB CTR CAVITY A&B) (2.535) (AC-DELCO #PT217)	98-02	F	1	12101825
3.	4-D13	3.887	SWITCH, CRCONT REL (W/O RET)	98	F (K34)	1	22584374
	4-D13	3.887	SWITCH, CRCONT REL	98-02	F (LS1, K34)	1	10426455
	4-D13	3.887	SWITCH, CRCONT REL	98-02	F (L36)	1	10426455
4.	4-D12	3.885	RETAINER, CRCONT VAC REL VLV	98-02	F	1	10194431
	4-N22 4-N22	4.054	RETAINER, M/TRNS SHFT ANTICIPATE SW (CLUTCH SW) (3.885)	98	F	1	10194431
	4-N22 4-N22	4.054	RETAINER, M/TRNS SHFT ANTICIPATE SW (CLUTCH SW) (3.885)	99-02	F (MM6)	1	10194431
	4-N22 4-N22	4.054	RETAINER, M/TRNS SHFT ANTICIPATE SW (CLUTCH SW) (3.885)	99-02	F (M49)	1	10194431
5.		N.S.	CLIP, CRCONT SERVO CBL				
6.	4-D12	3.885	RETAINER, CRCONT SERVO (AC-DELCO #10192278)	98	F (K34)	1	10192278
	4-D12	3.885	RETAINER, CRCONT SERVO (AC-DELCO #10192278)	99-02	F (LS1, K34)	1	10192278
7.	4-D11	3.880	CABLE, CRCONT SERVO (INCLS 15)	98	F (L36, M30, K34)	1	12558779
	4-D11	3.880	CABLE, CRCONT SERVO (INCLS 15)	98	F (L36, M49, K34)	1	12558780
	4-D11	3.880	CABLE, CRCONT SERVO (INCLS 15)	98-99	F (LS1, K34) (EXC NW9)	1	12554668
	4-D11	3.880	CABLE, CRCONT SERVO (INCLS 15)	00-02	F (LS1, K34) (EXC NW9)	1	12563527
8.	4-D12	3.885	COVER, CRCONT SERVO (AC-DELCO #10195513)	98-99	F (K34)	1	10195513
	4-D12	3.885	COVER, CRCONT SERVO (AC-DELCO #10195513)	00-02	F (LS1, K34)	1	10195513
9.		N.S.	CLAMP, A/CL OTLT RR DUCT				
10.	4-D12	3.885	BRACKET, CRCONT MDL	98-99	F (K34)	1	10195575
	4-D12	3.885	BRACKET, CRCONT MDL	00-02	F (LS1, K34)	1	10195575
11.	4-D12	3.885	BOLT, CRCONT SERVO (M6X1.0X34.35) (10.152)	98-99	F (K34)	3	10222298
	4-D12	3.885	BOLT, CRCONT SERVO (M6X1.0X34.35) (10.152)	00-02	F (LS1, K34)	3	10222298
12.	4-D13	3.887	MODULE, CRCONT	98	F (L36, K34)	1	25140823
	4-D13	3.887	MODULE, CRCONT (AC-DELCO #25177447)	98	F (LS1, K34)	1	25177447
	4-D13	3.887	MODULE, CRCONT (AC-DELCO #25315091)	99-02	F (LS1, K34)	1	25315091
13.	4-D13	3.887	CONNECTOR, MDL-CRCONT (BLACK) (10-WAY F) (W/LEADS) (2.530) (AC-DELCO #PT588)	98-02	F	1	12125676
14.	4-A28	3.425	CLIP, ACCEL CONT CBL	98	F (L36)	1	12555983
		N.S.	CLIP, ACCEL CONT CBL				
	4-A28	3.425	CLIP, ACCEL CONT CBL	99-02	F	1	12558980
15.		N.S.	CLIP, CRCONT SERVO CBL (PART OF 7)				

cardiagn.com

16.	4-D13	3.887	**CONNECTOR**, SW-CRCONT REL (W/LEADS) (PART OF 19, 29, 30) (BLACK) (2-WAY F) (W/LEADS) (2.530) (AC-DELCO #PT733)	98-02	F	AR	12126463
17.		N.S.	**CONNECTOR**, INLINE-TO I/P HARN		.....		
18.		N.S.	**CONNECTOR**, INLINE-TO I/P HARN (PART OF 19)		.....		
19.	4-D13	3.887	**HARNESS**, CRCONT WRG (INCLS 16, 18, 20, 21) (TAPE BACK EXTRA CONN ON M30 APPLICATION)	98	F (M30, K34)	1	12145111
	4-D13	3.887	**HARNESS**, CRCONT WRG (INCLS 16, 18, 20, 21) (TAPE BACK EXTRA CONN ON M30 APPLICATION)	98	F (L36, M49, K34)	1	12145111
	4-D13	3.887	**HARNESS**, CRCONT WRG (INCLS 16, 18, 20, 21)	98	F (L36, M49) (EXC K34)	1	12145112
	4-D13	3.887	**HARNESS**, CRCONT WRG (INCLS 16, 18, 20, 21) (TAPE BACK EXTRA CONN ON M30 APPLICATION)	99-02	F (LS1, M30, K34)	1	12145111
	4-D13	3.887	**HARNESS**, CRCONT WRG (INCLS 16, 18, 20, 21) (TAPE BACK EXTRA CONN ON M30 APPLICATION)	99-02	F (L36, M30)	1	12145111
	4-D13	3.887	**HARNESS**, CRCONT WRG (INCLS 16, 18, 20, 21) (TAPE BACK EXTRA CONN ON M30 APPLICATION)	99-02	F (M49, K34)	1	12145111
20.	4-N14	2.530	**CONNECTOR**, INLINE-TO FWD LP HARN (PART OF 19, 29, 30) (GREEN) (2-WAY M) (14.875) ...	98-02	F	1	12117275
	4-N14	2.530	**CONNECTOR**, INLINE-TO FWD LP HARN (PART OF 19, 29, 30) (WHITE) (8-WAY F) (W/LEADS) (2.535) (AC-DELCO #PT444) ...	98-02	F (L36)	1	12117271
	4-N14	2.530	**CONNECTOR**, INLINE-TO FWD LP HARN (PART OF 19, 29, 30) (1-WAY F) (W/LEADS) (2.535) (AC-DELCO #PT170)	98-99	F (LS1, L36)	1	12101763
	4-N14	2.530	**CONNECTOR**, INLINE-TO FWD LP HARN (PART OF 19, 29, 30) (10-WAY M W/LEADS) (2.535) (AC-DELCO #PT215)	98	F	1	12101823
	4-N14	2.530	**CONNECTOR**, INLINE-TO FWD LP HARN (PART OF 19, 29, 30) (WHITE) (8-WAY F) (W/LEADS) (2.535) (AC-DELCO #PT444) ..	98-02	F (LS1)	1	12117271
	4-N14	2.530	**CONNECTOR**, INLINE-TO FWD LP HARN (PART OF 19, 29, 30) (GRAY) (10-WAY F) (W/LEADS) (AC-DELCO #PT587)	98-02	F	1	12125675
	4-N14	2.530	**CONNECTOR**, INLINE-TO FWD LP HARN (PART OF 19, 29, 30) (BLACK) (4-WAY M) (2.694)	98-02	F	1	12129135

cardiagn.com

	4-N14	2.530	**CONNECTOR**, INLINE-TO FWD LP HARN (PART OF 19, 29, 30) (GREY) (2-WAY F, M/P 150 SLD W/LEADS) (4.710) (AC-DELCO #PT1357)	98-99	F	2	15306302
	4-N14	2.530	**CONNECTOR**, INLINE-TO FWD LP HARN (PART OF 19, 29, 30) (BLACK) (10-WAY F) (W/LEADS) (AC-DELCO #PT588)	99-02	F	1	12125676
	4-N14	2.530	**CONNECTOR**, INLINE-TO FWD LP HARN (PART OF 19, 29, 30) (1-WAY F) (MP 280) (2.535)	01-02	F (LS1, M30)	1	12065172
21.	4-D13	3.887	**CONNECTOR**, SW-CRCONT REL (PART OF 19) (BLACK) (2-WAY F) (W/LEADS) (2.530) (AC-DELCO #PT733)	98-02	F	AR	12126463
22.	4-N22 4-N22	4.054	**SWITCH**, M/TRNS SHFT ANTICIPATE (CLUTCH)	98-02	F	1	10180569
23.	4-N22 4-N22	4.054	**RETAINER**, M/TRNS SHFT ANTICIPATE SW (CLUTCH SW) (3.885)	98	F	1	10194431
	4-N22 4-N22	4.054	**RETAINER**, M/TRNS SHFT ANTICIPATE SW (CLUTCH SW) (3.885)	99-02	F (MM6)	1	10194431
	4-N22 4-N22	4.054	**RETAINER**, M/TRNS SHFT ANTICIPATE SW (CLUTCH SW) (3.885)	99-02	F (M49)	1	10194431
24.		8.977	**BOLT**, SCR HEX W/FLAT WA 12 DIA TYPE AB (CRCONT MDL BRKT)	98-02		1	11509374
25.	4-D12	3.885	**SHIELD**, CRCONT MDL	98-99	F (K34)	1	12550734
	4-D12	3.885	**SHIELD**, CRCONT MDL	00-02	F (LS1, K34)	1	12550734
26.	4-N24	7.242	**STUD**, FRT STAB SHF INSL CLA	98-02	F	1	10254770
27.		8.917	**NUT**, HFH, M8X1.25, 17.9 OD, 738 THK, 13MM HEX, 10, ZF (CRCONT MDL) (8.915) (AC-DELCO #11514596)	98-02	F	1	11514596
28.		8.977	**SCREW**, 6.3X1.81X20 (CRCONT MDL)	98-02	F	2	11509051
29.	4-D13	3.887	**HARNESS**, CRCONT WRG (INCLS 16, 20) (TAPE BACK EXTRA CONN ON M30 APPLICATION)	98	F (M30, K34)	1	12145111
	4-D13	3.887	**HARNESS**, CRCONT WRG (INCLS 16, 20) (TAPE BACK EXTRA CONN ON M30 APPLICATION)	98	F (L36, M49, K34)	1	12145111
	4-D13	3.887	**HARNESS**, CRCONT WRG (INCLS 16, 20)	98	F (L36, M49) (EXC K34)	1	12145112
	4-D13	3.887	**HARNESS**, CRCONT WRG (INCLS 16, 20) (TAPE BACK EXTRA CONN ON M30 APPLICATION)	99-02	F (LS1, M30, K34)	1	12145111
	4-D13	3.887	**HARNESS**, CRCONT WRG (INCLS 16, 20) (TAPE BACK EXTRA CONN ON M30 APPLICATION)	99-02	F (L36, M30)	1	12145111

cardiagn.com

	4-D13	3.887	HARNESS, CRCONT WRG (INCLS 16, 20) (TAPE BACK EXTRA CONN ON M30 APPLICATION)	99-02	F (M49, K34)	1	12145111
30.	4-D13	3.887	HARNESS, CRCONT WRG (INCLS 16, 20, 32) (TAPE BACK EXTRA CONN ON M30 APPLICATION)	98	F (M30, K34)	1	12145111
	4-D13	3.887	HARNESS, CRCONT WRG (INCLS 16, 20, 32) (TAPE BACK EXTRA CONN ON M30 APPLICATION)	98	F (L36, M49, K34)	1	12145111
	4-D13	3.887	HARNESS, CRCONT WRG (INCLS 16, 20, 32)	98	F (L36, M49) (EXC K34)	1	12145112
	4-D13	3.887	HARNESS, CRCONT WRG (INCLS 16, 20, 32)	98	F (LS1, MM6, K34)	1	12145113
	4-D13	3.887	HARNESS, CRCONT WRG (INCLS 16, 20, 32) (TAPE BACK EXTRA CONN ON M30 APPLICATION)	99-02	F (LS1, M30, K34)	1	12145111
	4-D13	3.887	HARNESS, CRCONT WRG (INCLS 16, 20, 32) (TAPE BACK EXTRA CONN ON M30 APPLICATION)	99-02	F (L36, M30)	1	12145111
	4-D13	3.887	HARNESS, CRCONT WRG (INCLS 16, 20, 32) (TAPE BACK EXTRA CONN ON M30 APPLICATION)	99-02	F (MM6, K34)	1	12145111
	4-D13	3.887	HARNESS, CRCONT WRG (INCLS 16, 20, 32) (TAPE BACK EXTRA CONN ON M30 APPLICATION)	99-02	F (M49, K34)	1	12145111
31.	4-D13	3.887	SWITCH, CRCONT REL (W/O RET)	98	F (K34)	1	22584374
	4-D13	3.887	SWITCH, CRCONT REL	98-02	F (LS1, K34)	1	10426455
	4-D13	3.887	SWITCH, CRCONT REL	98-02	F (L36)	1	10426455
32.	4-D13	3.887	CONNECTOR, SW-CRCONT REL (W/LEADS) (PART OF 19) (BLACK) (2-WAY F) (W/LEADS) (2.530) (AC-DELCO #PT733) ...	98-02	F	1	12126463

RPO DEFINITIONS

K34 – CRUISE CONTROL,AUTOMATIC,ELECTRONIC
LS1 – ENGINE GAS, 8 CYL, 5.7L, SFI, ALUMINUM ENGINE
L36 – ENGINE GAS, 6 CYL, 3.8K, MFI, V6, HO (ERV6 SERIES)
MM6 – TRANSMISSION MAN 6 SPD, BORG WARNER, 85MM, 1ST 2.66, 6TH 0.50, O/D
M30 – TRANSMISSION,AUTOMATIC 4 SPEED,4L60E,ELECTRONIC
M49 – TRANSMISSION MAN 5 SPD, BORG WARNER, 77MM, 3.75 1ST, .76 5TH, O/D
NW9 – TRACTION CONTROL ELECTRONIC
UK2 – LEVER,DIRECTIONAL SIGNAL(EXPORT)

cardiagn.com

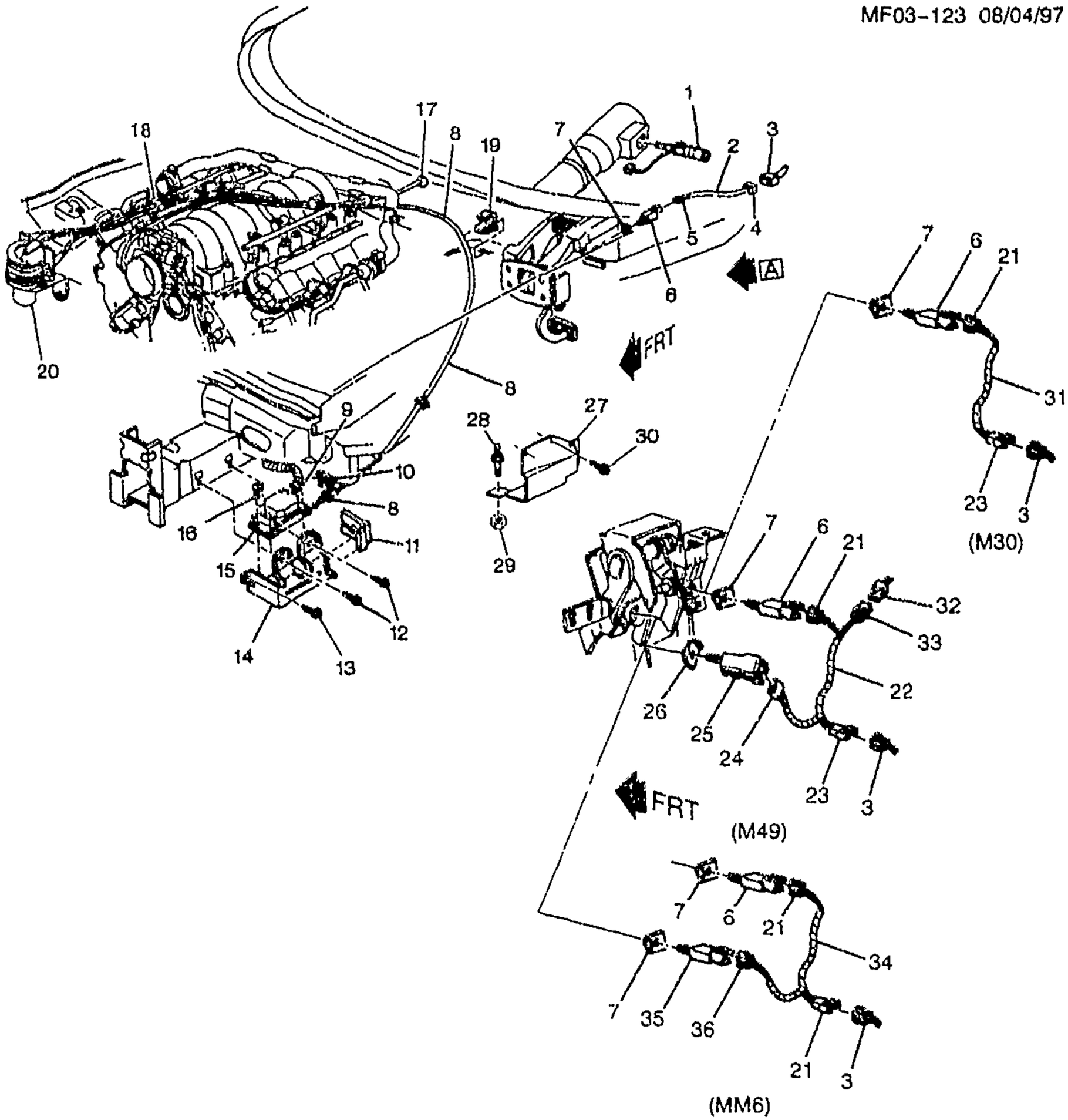

VIEW A

MF03-123

1998-2002 F CRUISE CONTROL (K34,NW9)

1.	4-N22	2.897	**LEVER**, T/SIG & HDLP D/SW & CRCONT ACTR & WSW & WSWA (AC-DELCO #25140743)	**98-02** F (K34) (EXC UK2)	1	**25140743**
	4-N22	2.897	**LEVER**, T/SIG & HDLP D/SW & CRCONT ACTR & WSW & WSWA	**98-02** F (K34, UK2) (EXPORT)	1	**25140540**

cardiagn.com

2.	4-D13	3.887	HARNESS, CRCONT WRG (INCLS 4, 5) (TAPE BACK EXTRA CONN ON M30 APPLICATION) ..	98	F (M30, K34)	1	12145111
	4-D13	3.887	HARNESS, CRCONT WRG (INCLS 4, 5) (TAPE BACK EXTRA CONN ON M30 APPLICATION) ..	98	F (L36, M49, K34)	1	12145111
	4-D13	3.887	HARNESS, CRCONT WRG (INCLS 4, 5)	98	F (LS1, MM6, K34)	1	12145113
	4-D13	3.887	HARNESS, CRCONT WRG (INCLS 4, 5) (TAPE BACK EXTRA CONN ON M30 APPLICATION) ..	99-02	F (LS1, M30, K34)	1	12145111
	4-D13	3.887	HARNESS, CRCONT WRG (INCLS 4, 5) (TAPE BACK EXTRA CONN ON M30 APPLICATION) ..	99-02	F (L36, M30)	1	12145111
	4-D13	3.887	HARNESS, CRCONT WRG (INCLS 4, 5) (TAPE BACK EXTRA CONN ON M30 APPLICATION) ..	99-02	F (MM6, K34)	1	12145111
	4-D13	3.887	HARNESS, CRCONT WRG (INCLS 4, 5) (TAPE BACK EXTRA CONN ON M30 APPLICATION) ..	99-02	F (M49, K34)	1	12145111
3.	4-D13	3.887	CONNECTOR, INLINE-TO CRCONT SW HARN (GRAY) (2-WAY F W/LEADS) (INDEX TAB CTR CAVITY A&B) (2.535) (AC-DELCO #PT217)	98-02	F	1	12101825
4.	4-N14	2.530	CONNECTOR, INLINE-TO FWD LP HARN (PART OF 2) (GREEN) (2-WAY M) (14.875)	98-02	F	1	12117275
5.	4-D13	3.887	CONNECTOR, SW-CRCONT REL (PART OF 2) (BLACK) (2-WAY F) (W/LEADS) (2.530) (AC-DELCO #PT733)	98-02	F	1	12126463
6.	4-D13	3.887	SWITCH, CRCONT REL (W/O RET)	98	F (K34)	1	22584374
	4-D13	3.887	SWITCH, CRCONT REL	98-02	F (LS1, K34)	1	10426455
	4-D13	3.887	SWITCH, CRCONT REL	98-02	F (L36)	1	10426455
7.	4-D12	3.885	RETAINER, CRCONT VAC REL VLV	98-02	F	1	10194431
8.	4-D11	3.880	CABLE, CRCONT SERVO (INCLS 19)	98	F (L36, M30, K34)	1	12558779
	4-D11	3.880	CABLE, CRCONT SERVO (INCLS 19)	98	F (L36, M49, K34)	1	12558780
	4-D11	3.880	CABLE, CRCONT SERVO (INCLS 19)	98-02	F (LS1, K34, NW9)	1	12563243
9.	4-D13	3.887	CONNECTOR, MDL-CRCONT (BLACK) (10-WAY F) (W/LEADS) (2.530) (AC-DELCO #PT588) ...	98-02	F	1	12125076
10.	4-D12	3.885	RETAINER, CRCONT SERVO (AC-DELCO #10192278)	98	F (K34)	1	10192278
	4-D12	3.885	RETAINER, CRCONT SERVO (AC-DELCO #10192278)	99-02	F (LS1, K34)	1	10192278
11.	4-D12	3.885	COVER, CRCONT SERVO (AC-DELCO #10195513)	98-99	F (K34)	1	10195513
	4-D12	3.885	COVER, CRCONT SERVO (AC-DELCO #10195513)	00-02	F (LS1, K34)	1	10195513

cardiagn.com

12.		8.900	**BOLT/SCREW**, HEX FL WA, M6X1X25, 17 CD, 6202M STL, 7111M, MACH (CRCONT MDL BRKT)	98-02		AR	11516413
13.		8.977	**BOLT**, SCR HEX W/FLAT WA 12 DIA TYPE AB (CRCONT MDL BRKT)	98-02	F	1	11509374
14.	4-D12	3.885	**BRACKET**, CRCONT MDL	98-99	F (K34)	1	10195575
	4-D12	3.885	**BRACKET**, CRCONT MDL	00-02	F (LS1, K34)	1	10195575
15.	4-D13	3.887	**MODULE**, CRCONT	98	F (L36, K34)	1	25140823
	4-D13	3.887	**MODULE**, CRCONT (AC-DELCO #25177447)	98	F (LS1, K34)	1	25177447
	4-D13	3.887	**MODULE**, CRCONT (AC-DELCO #25315091)	99-02	F (LS1, K34)	1	25315091
16.	4-D12	3.885	**BOLT**, CRCONT SERVO (M6X1.0X34 35) (10.152)	98-99	F (K34)	3	10222298
	4-D12	3.885	**BOLT**, CRCONT SERVO (M6X1.0X34.35) (10.152)	00-02	F (LS1, K34)	3	10222298
17.	4-A28	3.430	**CABLE**, THROT LVR	98-99	F (LS1, NW9)	1	12563242
	4-A28	3.430	**CABLE**, THROT LVR	00-02	F (LS1, NW9)	1	12563339
18.	4-A28	3.425	**CLIP**, ACCEL CONT CBL	98	F (L36)	1	12555983
	4-A28	3.425	**CLIP**, ACCEL CONT CBL	98-02	F (LS1, NW9)	1	12558980
19.		N.S.	**CLIP**, CRCONT SERVO CBL (PART OF 8)				
20.		N.S.	**ADJUSTER**, ACCEL CONT & CRCONT SERVO CBL (SEE ACCELERATOR CONTROL ILLUSTRATION IN GRP. 3.000 FOR DETAILED VIEW.)				10236749
21.	4-D13	3.887	**CONNECTOR**, SW-CRCONT REL (PART OF 22, 31, 34) (BLACK) (2-WAY F) (W/LEADS) (2.530) (AC-DELCO #PT733)	98-02	F	AR	12126463
22.	4-D13	3.887	**HARNESS**, CRCONT WRG (INCLS 21, 23, 24, 33) (TAPE BACK EXTRA CONN ON M30 APPLICATION)	98	F (M30, K34)	1	12145111
	4-D13	3.887	**HARNESS**, CRCONT WRG (INCLS 21, 23, 24, 33) (TAPE BACK EXTRA CONN ON M30 APPLICATION)	98	F (L36, M49, K34)	1	12145111
	4-D13	3.887	**HARNESS**, CRCONT WRG (INCLS 21, 23, 24, 33)	98	F (L36, M49) (EXC K34)	1	12145112
	4-D13	3.887	**HARNESS**, CRCONT WRG (INCLS 21, 23, 24, 33) (TAPE BACK EXTRA CONN ON M30 APPLICATION)	99-02	F (LS1, M30, K34)	1	12145111
	4-D13	3.887	**HARNESS**, CRCONT WRG (INCLS 21, 23, 24, 33) (TAPE BACK EXTRA CONN ON M30 APPLICATION)	99-02	F (L36, M30)	1	12145111
	4-D13	3.887	**HARNESS**, CRCONT WRG (INCLS 21, 23, 24, 33) (TAPE BACK EXTRA CONN ON M30 APPLICATION)	99-02	F (M49, K34)	1	12145111
23.	4-N14	2.530	**CONNECTOR**, INLINE-TO FWD LP HARN (PART OF 22, 31) (GREEN) (2-WAY M) (14.875)	98-02	F	1	12117275

cardiagn.com

	4-N14	2.530	CONNECTOR, INLINE-TO FWD LP HARN (PART OF 22, 31) (WHITE) (8-WAY F) (W/LEADS) (2.535) (AC-DELCO #PT444) ...	98-02	F (L36)	1	12117271
	4-N14	2.530	CONNECTOR, INLINE-TO FWD LP HARN (PART OF 22, 31) (1-WAY F) (W/LEADS) (2.535) (AC-DELCO #PT170)	98-99	F (LS1, L36)	1	12101763
	4-N14	2.530	CONNECTOR, INLINE-TO FWD LP HARN (PART OF 22, 31) (10-WAY M W/LEADS) (2.535) (AC-DELCO #PT215)	98	F	1	12101823
	4-N14	2.530	CONNECTOR, INLINE-TO FWD LP HARN (PART OF 22, 31) (WHITE) (8-WAY F) (W/LEADS) (2.535) (AC-DELCO #PT444) ...	98-02	F (LS1)	1	12117271
	4-N14	2.530	CONNECTOR, INLINE-TO FWD LP HARN (PART OF 22, 31) (GRAY) (10-WAY F) (W/LEADS) (AC-DELCO #PT587)	98-02	F	1	12125675
	4-N14	2.530	CONNECTOR, INLINE-TO FWD LP HARN (PART OF 22, 31) (BLACK) (4-WAY M) (2.694)	99-02	F	1	12129135
	4-N14	2.530	CONNECTOR, INLINE-TO FWD LP HARN (PART OF 22, 31) (GREY) (2-WAY F, M/P 150 SLD W/LEADS) (4.710) (AC-DELCO #PT1357)	98-99	F	2	15306302
	4-N14	2.530	CONNECTOR, INLINE-TO FWD LP HARN (PART OF 22, 31) (10-WAY M W/LEADS) (2.535) (AC-DELCO #PT215)	99-02	F (LS1, NW9)	1	12101823
	4-N14	2.530	CONNECTOR, INLINE-TO FWD LP HARN (PART OF 22, 31) (BLACK) (10-WAY F) (W/LEADS) (AC-DELCO #PT588)	99-02	F	1	12125676
	4-N14	2.530	CONNECTOR, INLINE-TO FWD LP HARN (PART OF 22, 31) (1-WAY F) (MP 280) (2.535)	01-02	F (LS1, M30)	1	12065172
24.	4-D13	3.887	CONNECTOR, SW-CRCONT REL (PART OF 22) (BLACK) (2-WAY F) (W/LEADS) (2.530) (AC-DELCO #PT733)	98-02	F	AR	12126463
25.	4-N22 4-N22	4.054	SWITCH, M/TRNS SHFT ANTICIPATE (CLUTCH)	98-02	F (M49)	1	10180569
26.	4-N22 4-N22	4.054	RETAINER, M/TRNS SHFT ANTICIPATE SW (CLUTCH SW) (3.885)	98	F	1	10194431
	4-N22 4-N22	4.054	RETAINER, M/TRNS SHFT ANTICIPATE SW (CLUTCH SW) (3.885)	99-02	F (MM6)	1	10194431
	4-N22 4-N22	4.054	RETAINER, M/TRNS SHFT ANTICIPATE SW (CLUTCH SW) (3.885)	99-02	F (M49)	1	10194431
27.	4-D12	3.885	SHIELD, CRCONT MDL	98-99	F (K34)	1	12550734
	4-D12	3.885	SHIELD, CRCONT MDL	00-02	F (LS1, K34)	1	12550734
28.	4-N24	7.242	STUD, FRT STAB SHF INSL CLA	98-02	F	1	10254770

cardiagn.com

29.		8.917	NUT, HFH, M8X1.25, 17.9 OD, 738 THK, 13MM HEX, 10, ZF (CRCONT MDL) (8.915) (AC-DELCO #11514596)	98-02	F	1	11514596
30.		8.977	SCREW, 6.3X1.81X20 (CRCONT MDL)	98-02	F	2	11509051
31.	4-D13	3.887	HARNESS, CRCONT WRG (INCLS 21, 36) (TAPE BACK EXTRA CONN ON M30 APPLICATION)	98	F (M30, K34)	1	12145111
	4-D13	3.887	HARNESS, CRCONT WRG (INCLS 21, 36) (TAPE BACK EXTRA CONN ON M30 APPLICATION)	98	F (L36, M49, K34)	1	12145111
	4-D13	3.887	HARNESS, CRCONT WRG (INCLS 21, 36)	98	F (L36, M49) (EXC K34)	1	12145112
	4-D13	3.887	HARNESS, CRCONT WRG (INCLS 21, 36) (TAPE BACK EXTRA CONN ON M30 APPLICATION)	99-02	F (LS1, M30, K34)	1	12145111
	4-D13	3.887	HARNESS, CRCONT WRG (INCLS 21, 36) (TAPE BACK EXTRA CONN ON M30 APPLICATION)	99-02	F (L36, M30)	1	12145111
	4-D13	3.887	HARNESS, CRCONT WRG (INCLS 21, 36) (TAPE BACK EXTRA CONN ON M30 APPLICATION)	99-02	F (M49, K34)	1	12145111
32.		N.S.	CONNECTOR, INLINE-TO I/P HARN		.....		
33.		N.S.	CONNECTOR, INLINE-TO I/P HARN (PART OF 22)		.....		
34.	4-D13	3.887	HARNESS, CRCONT WRG (INCLS 16, 20, 32) (TAPE BACK EXTRA CONN ON M30 APPLICATION)	98	F (M30, K34)	1	12145111
	4-D13	3.887	HARNESS, CRCONT WRG (INCLS 16, 20, 32) (TAPE BACK EXTRA CONN ON M30 APPLICATION)	98	F (L36, M49, K34)	1	12145111
	4-D13	3.887	HARNESS, CRCONT WRG (INCLS 16, 20, 32)	98	F (L36, M49) (EXC K34)	1	12145112
	4-D13	3.887	HARNESS, CRCONT WRG (INCLS 16, 20 32)	98	F (LS1, MM6, K34)	1	12145113
	4-D13	3.887	HARNESS, CRCONT WRG (INCLS 16, 20, 32) (TAPE BACK EXTRA CONN ON M30 APPLICATION)	99-02	F (LS1, M30, K34)	1	12145111
	4-D13	3.887	HARNESS, CRCONT WRG (INCLS 16, 20, 32) (TAPE BACK EXTRA CONN ON M30 APPLICATION)	99-02	F (L36, M30)	1	12145111
	4-D13	3.887	HARNESS, CRCONT WRG (INCLS 16, 20, 32) (TAPE BACK EXTRA CONN ON M30 APPLICATION)	99-02	F (MM6, K34)	1	12145111

cardiagn.com

	4-D13	3.887	**HARNESS**, CRCONT WRG (INCLS 16, 20, 32) (TAPE BACK EXTRA CONN ON M30 APPLICATION)	99-02	F (M49, K34)	1	12145111
35.	4-D12	3.883	**SWITCH**, CRCONT (W/O RET) (3.887)	98	F (K34, MM6)	1	22584374
	4-N22 4-N22	4.054	**SWITCH**, M/TRNS SHFT ANTICIPATE	99-02	F (M49)	1	10180569
	4-N22 4-N22	4.054	**SWITCH**, M/TRNS SHFT ANTICIPATE	99-02	F (MM6)	1	10180569
36.	4-D13	3.887	**CONNECTOR**, SW-CRCONT REL (W/LEADS) (PART OF 34) (BLACK) (2-WAY F) (W/LEADS) (2.530) (AC- DELCO #PT733) ...	98-02	F	1	12126463

RPO DEFINITIONS

K34 – CRUISE CONTROL,AUTOMATIC,ELECTRONIC
LS1 – ENGINE GAS, 8 CYL, 5.7L, SFI, ALUMINUM ENGINE
L36 – ENGINE GAS, 6 CYL, 3.8K, MFI, V6, HO (ERV6 SERIES)
MM6 – TRANSMISSION MAN 6 SPD, BORG WARNER, 85MM, 1ST 2.66, 6TH 0.50, O/D
M30 – TRANSMISSION,AUTOMATIC 4 SPEED,4L60E,ELECTRONIC
M49 – TRANSMISSION MAN 5 SPD, BORG WARNER, 77MM, 3.75 1ST, .76 5TH, O/D
NW9 – TRACTION CONTROL ELECTRONIC
UK2 – LEVER,DIRECTIONAL SIGNAL(EXPORT)

cardiagn.com

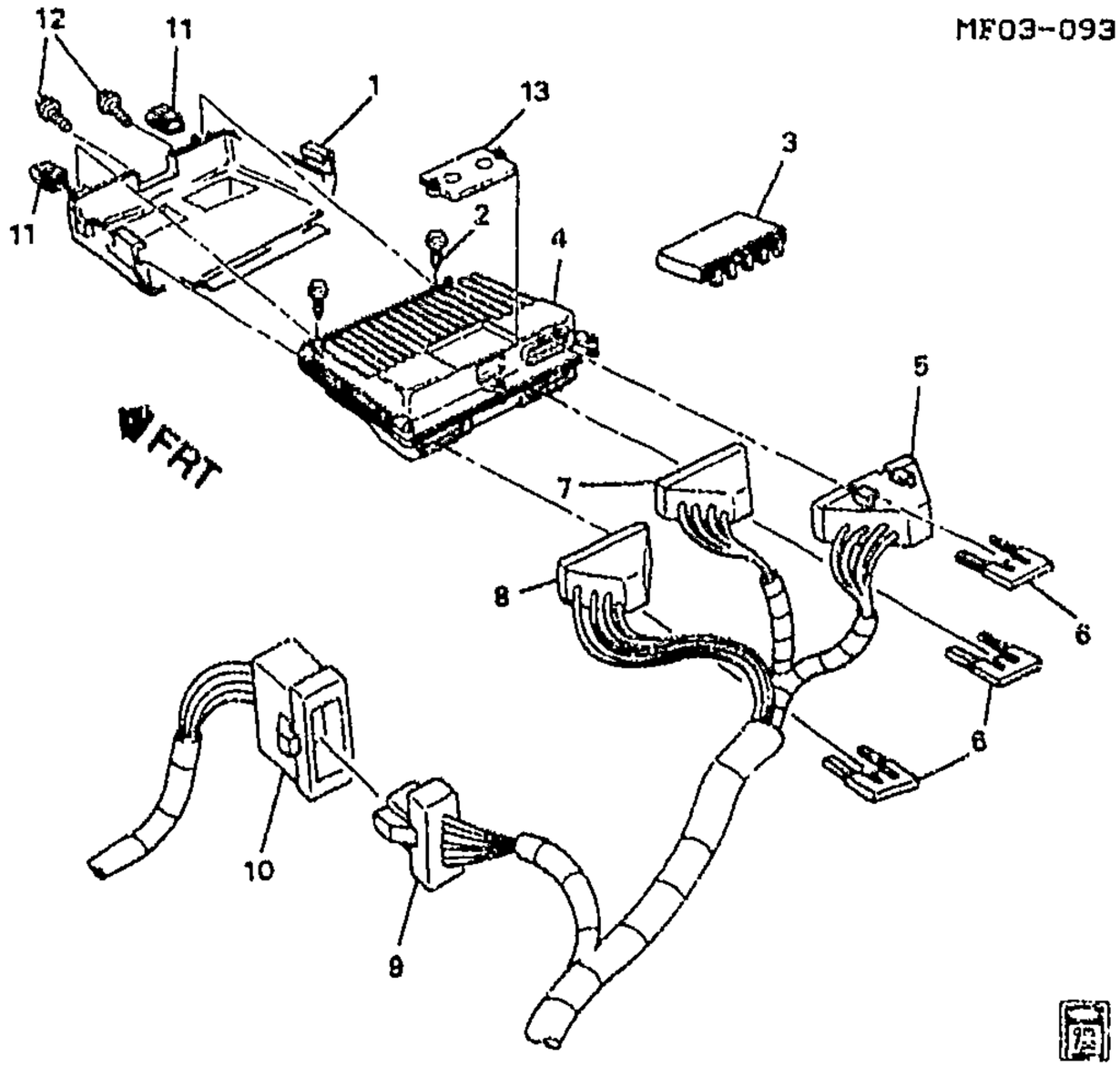

MF03-093

1994-1995 F E.C.M. MODULE & WIRING HARNESS (L32/3.4S)

1.	4-C20	3.671	BRACKET, ECM BRKT (INCLS 11)	94-95	F (L32)	1	10195539
2.		8.977	SCREW, HEX W/FL WA, M4.2X1.41X30, PO (ECM BRKT)	94-95		2	11515153
3.	4-N8	2.393	MODULE, KNOCK SEN (PART OF 4) (AC-DELCO #216-56)	94-95	F (L32)	1	16171749
4.	4-C12	3.670	MODULE, PWRT CONT (REMAN) (CODE BJBH) (CONTAINS EPROM WHICH MUST BE PROGRAMED AT THE DEALERSHIP) (INCLS 3, 13) (AC-DELCO #16196397)	94-95	F (L32, M49)	1	16196397
	4-C12	3.670	MODULE, PWRT CONT (REMAN) (INCLS UNPROGRAMMED EPROM) (CONTAINS EPROM WHICH MUST BE PROGRAMED AT THE DEALERSHIP) (INCLS 3, 13) (AC-DELCO #16184737) (CODES BDML BJPM, BJRM, BNFM)	94-95	F (L32, M30)	1	16184737
5.		N.S.	CONNECTOR, INLINE-TO ENG HARN, ECM HARN (J3) (BLU)				
6.	4-N20	2.559	RETAINER, ECM WRG HARN CONN (BLUE) (W/ACCESS HANDLE) (AC-DELCO	94-95	F (L32)	3	12191284

cardiagn.com

7.		N.S.	CONNECTOR, INLINE-TO ENG HARN, ECM HARN (J2) (BLK) ...		.....		
8.		N.S.	CONNECTOR, INLINE-TO ENG HARN, ECM HARN (J1) (CLR) ...		.....		
9.	4-N14	2.530	CONNECTOR, INLINE-TO ENG HARN (BLACK) (10-WAY M) (AC-DELCO #PT505)	94-95	F	1	12117372
10.	4-N14	2.530	CONNECTOR, INLINE-TO FWD LP HARN (BLACK) (10-WAY F) (W/LEADS) (AC-DELCO #PT588)	94-95	F	1	12125676
	4-N14	2.530	CONNECTOR, INLINE-TO FWD LP HARN (GREEN) (2-WAY M) (14.875)	94-95	F	1	12117275
	4-N14	2.530	CONNECTOR, INLINE-TO FWD LP HARN (6-WAY F) (W/LEADS) (2.535) (AC-DELCO #PT246) ...	95	F	2	12101854
	4-N14	2.530	CONNECTOR, INLINE-TO FWD LP HARN (GREY) (2-WAY F, M/P 150 SLD W/LEADS) (4.710) (AC-DELCO #PT1357)	95	F	2	15306302
11.		8.921	NUT, U TYPE, MULTI THD, PREV TORQ, M4.2X1.41TAP, 8.1REACH, 0.65-3.80 PNLS 1065 PZOR (ECM BRKT) (PART OF 1) (AC-DELCO #11513599)	94-95	.....	2	11513599
12.		8.900	BOLT, HEX W/CON WA, M6X1X20 (ECM BRKT)	94-95	.....	2	11514623
13.		N.S.	COVER, EPROM (W/SCREWS) (PART OF 4)		.....	1	

RPO DEFINITIONS

L32 - ENGINE,3.4L,V6,(3.4S),SFI,OHV
M30 - TRANSMISSION,AUTOMATIC 4 SPEED,4L60E,ELECTRONIC
M49 - TRANSMISSION MAN 5 SPD, BORG WARNER, 77MM, 3.75 1ST, .76 5TH, O/D

cardiagn.com

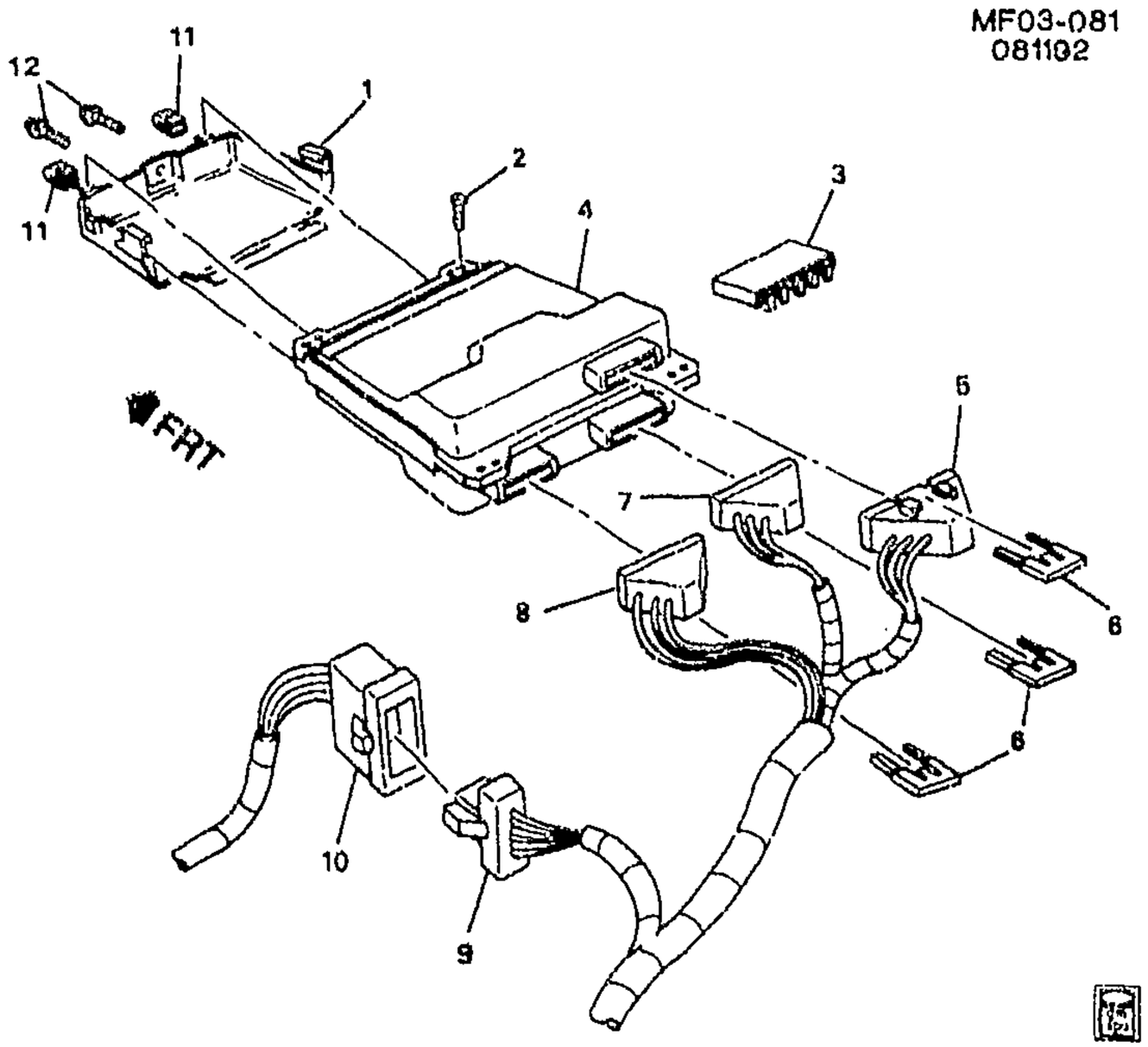

MF03-081

1993 F P.C.M. MODULE & WIRING HARNESS (L32/3.4S)

1.	4-C20	3.671	**BRACKET**, ECM BRKT (INCLS 11)	93 F	1	10098549
2.		8.977	**BOLT**, HWH M4.2X1.41X25 PZOR TAP 17 OD (ECM BRKT)	93	2	11508233
3.		N.S.	**EPROM**, ECM (PART OF 4)			
4.	4-C12	3.670	**MODULE**, PWRT CONT (REMAN) (INCLS UNPROGRAMMED EPROM) (CONTAINS EPROM WHICH MUST BE PROGRAMMED AT THE DEALERSHIP) (INCL 3) (CODES BDLM, BDLN, BDLP)	93 F (L32)	1	16172693
5.		N.S.	**CONNECTOR**, INLINE-TO ENG HARN, ECM HARN (J3) (BLU)			
6.	4-N20	2.559	**RETAINER**, ECM WRG HARN CONN (BLUE) (W/ACCESS HANDLE) (AC-DELCO #12191284)	93 F (L32)	3	12191284
7.		N.S.	**CONNECTOR**, INLINE-TO ENG HARN, ECM HARN (J2) (BLK)			
8.		N.S.	**CONNECTOR**, INLINE-TO ENG HARN, ECM HARN (J1) (CLR)			
9.	4-N14	2.530	**CONNECTOR**, INLINE-TO ENG HARN (BLACK) (10-WAY M)	93 F	1	12117372

cardiagn.com

10.	4-N14	2.530	CONNECTOR, INLINE-TO FWD LP HARN (BLACK) (10--WAY F) (W/LEADS) (AC-DELCO #PT588)	93	F	1	12125676
11.		8.021	NUT, U TYPE, MULTI THD, PREV TORQ, M4.2X1.41TAP, 8.1REACH, 0.65-3.80 PNLS 1065 PZOR (ECM BRKT) (PART OF 1) (AC-DELCO #11513599)	93	.....	2	11513599
12.		8.900	BOLT, HEX W/CON WA, M6X1X20 (ECM BRKT)	93	.....	2	11514623

RPO DEFINITIONS

L32 - ENGINE,3.4L,V6,(3.4S),SFI,OHV

cardiagn.com

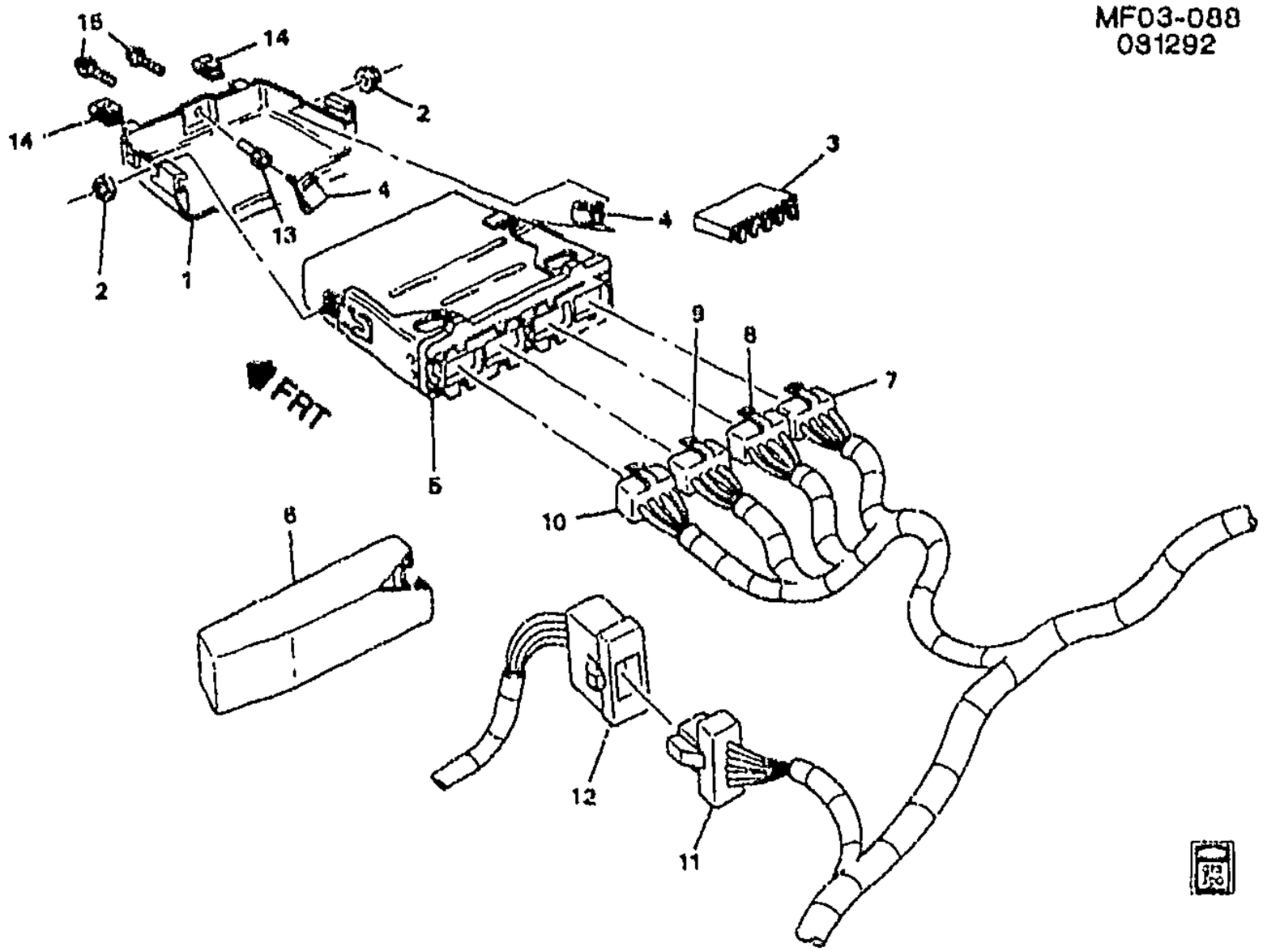

MF03-088

1993 F P.C.M. MODULE & WIRING HARNESS (LT1/5.7P)

1.	4-C20	3.671	BRACKET, ECM BRKT (INCLS 14)	93 F	1	10098549
2.		8.917	NUT, CONICAL SPR WA HEX (METRIC STYLE 2) M5 X 0.86N 4 (ECM BRKT)	93	2	11503647
3.	4-C12	3.670	EPROM, ECM (2980ASKW) (AC-DELCO #16162979)	93 F (LT1, M28, QLC)	1	16162979
	4-C12	3.670	EPROM, ECM (2999ASCP) (AC-DELCO #16162998)	93 F (LT1, MD8, GU5, NA5)	1	16162998
	4-C12	3.670	EPROM, ECM (3008ASCR) (AC-DELCO #16163007)	93 F (LT1, MD8, GU2 NB2, QMT)	1	16163007
	4-C12	3.670	EPROM, ECM (3012ASKS) (AC-DELCO #16163011)	93 F (LT1, MD8, GU2, NB2, QLC)	1	16163011
	4-C12	3.670	EPROM, ECM (3018ASKT) (AC-DELCO #16163017)	93 F (LT1, MD8, GU5, NB2)	1	16163017
	4-C12	3.670	EPROM, ECM (3022ASKU) (AC-DELCO #16163021)	93 F (LT1, M28, QMT)	1	16163021
	4-C12	3.670	EPROM, ECM (7045BDKY, 9600BDZL, 6379BNXF) (AC-DELCO #16216379)	93 F (LT1, MD8, GU5, NA5)	1	16216379
	4-C12	3.670	EPROM, ECM (7048BDKX, 9597BDZK, 6990BPBD) (AC-DELCO #16216990)	93 F (LT1, MD8, GU2, NA5, QLC)	1	16216990
	4-C12	3.670	EPROM, ECM (7050BDKW, 9592BDZJ, 6377BNXD)	93 F (LT1, MD8, GU2, NA5, QMT)	1	16216377

cardiagn.com

	4-C12	3.670	**EPROM**, ECM (7053BDKZ, 9604BDZM) (AC-DELCO #16189603)	93	F (LT1, MD8, GU2, NB2, QMT)	1	16189603
	4-C12	3.670	**EPROM**, ECM (7055BDLA, 9608BDZN) (AC-DELCO #16189607)	93	F (LT1, MD8, GU2, NB2, QLC)	1	16189607
	4-C12	3.670	**EPROM**, ECM (7058BDLB, 9612BDZP) (AC-DELCO #16189610)	93	F (LT1, MD8, GU5, NB2, QLC)	1	16189610
	4-C12	3.670	**EPROM**, ECM (7060BDLC) (AC-DELCO #16186818)	93	F (LT1, M28, QMT)	1	16186818
	4-C12	3.670	**EPROM**, ECM (7065BDLF) (AC-DELCO #16186822)	93	F (LT1, M28, QLC)	1	16186822
4.	4-C20	3.671	**BOLT**, ECM BRKT (9.667) (AC-DELCO #16148549)	93	F (LT1)	3	16148549
5.	4-C12	3.670	**MODULE**, PWRT CONT (REMAN) (AC-DELCO #16159278)	93	F (LT1)	1	16159278
6.	4-N14	2.530	**COVER**, ENG WRG HARN ECM CONN	93	F (LT1)	1	12129144
7.		N.S.	**CONNECTOR**, INLINE-TO ENG HARN, ECM HARN (J4) (BRN) ...		.....		
8.		N.S.	**CONNECTOR**, INLINE-TO ENG HARN, ECM HARN (J3) (GRN) ...		.....		
9.		N.S.	**CONNECTOR**, INLINE-TO ENG HARN, ECM HARN (J2) (RED) ...		.....		
10.		N.S.	**CONNECTOR**, INLINE-TO ENG HARN, ECM HARN (J1) (GRAY) ..		.....		
11.	4-N14	2.530	**CONNECTOR**, INLINE-TO ENG HARN (BLACK) (10-WAY M) (AC-DELCO #PT505)	93	F	1	12117372
12.	4-N14	2.530	**CONNECTOR**, INLINE-TO FWD LP HARN (BLACK) (10-WAY F) (W/LEADS) (AC-DELCO #PT588)	93	F	1	12125676
13.	4-C20	3.671	**RETAINER**, ECM (OVERALL LENGTH 1.25") (AC-DELCO #10027015)	93	F (LT1)	1	10027015
14.		8.921	**NUT**, U TYPE, MULTI THD, PREV TORQ, M4.2X1.41TAP 8.1REACH, 0.65-3.80 PNLS 1065 PZOR (ECM BRKT) (PART OF 1) (AC-DELCO #11513599)	93	.....	2	11513599
15.		8.900	**BOLT**, HEX W/CON WA, M6X1X20 (ECM BRKT)	93	.....	2	11514623

RPO DEFINITIONS

GU2 - AXLE,REAR,2.73 RATIO
GU5 - AXLE,REAR,3.23 RATIO
LT1 - ENGINE-GAS, 8 CYL, 5.7L(5.7P),MFI,HO
MD8 - TRANSMISSION,AUTOMATIC 4-SPEED(THM700R4/4L60)
M28 - TRANSMISSION MAN, 6 SPD, BORG WARNER, 85MM, 3.36 1ST, 1.35 3RD
NA5 - EMISSION SYSTEM,FEDERAL REQUIREMENTS
NB2 - EMISSION SYSTEM,CALIFORNIA REQUIREMENTS
QLC - TIRE,ALL P245/50ZR16/N BL R/PE ST TL HWY
QMT - TIRE ALL P235/55R16/N BL R/PE ST TL AL2

cardiagn.com

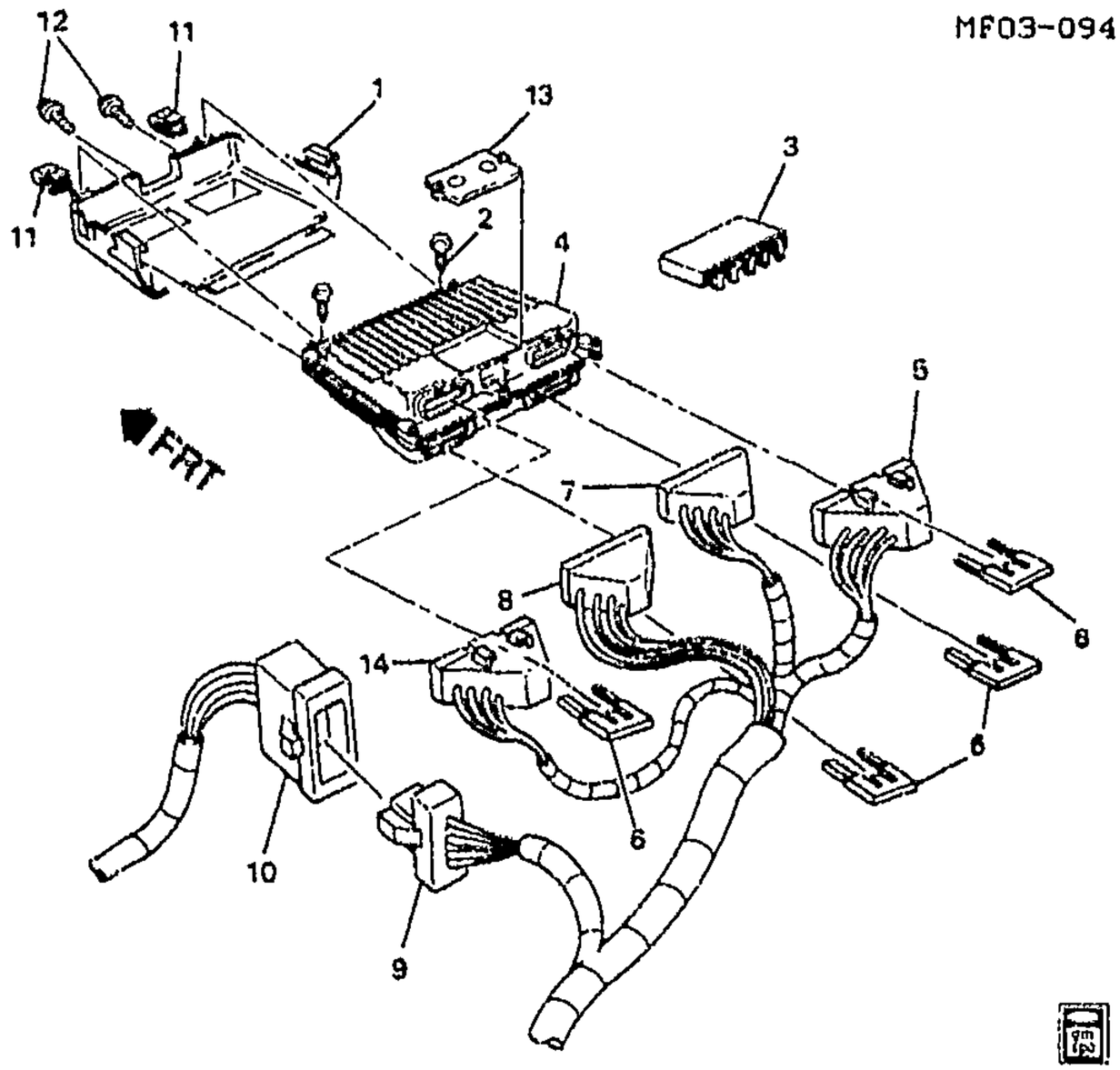

MF03-094

1994-1997 F P.C.M. MODULE & WIRING HARNESS (LT1/5.7P)

1.	4-C20	3.671	BRACKET, ECM BRKT (INCLS 11)	94-97	F (LT1)	1	10195539
2.		8.977	SCREW, HEX W/FL WA, M4.2X1.41X30, PO (ECM BRKT)	94-97		2	11515153
3.		N.S.	EPROM, ECM (PART OF 4)				
	4-N8	2.383	MODULE, KNOCK SEN (PART OF 4) (AC-DELCO #216-65)	96-97	F (LT1)	1	16214661
	4-N8	2.383	MODULE, KNOCK SEN (8-PIN) (PART OF 4) (AC-DELCO #216-57)	94-95	F (LT1)	1	16177700
4.	4-C12	3.670	MODULE, PWRT CONT (REMAN) (CONTAINS EPROM WHICH MUST BE PROGRAMED AT THE DEALERSHIP) (INCLS 3, 13) (AC-DELCO #16242921)	97	F (LT1)	1	16242921
	4-C12	3.670	MODULE, PWRT CONT (REMAN) (INCLS UNPROGRAMMED EPROM) (CONTAINS EPROM WHICH MUST BE PROGRAMED AT THE DEALERSHIP) (INCLS 3, 13) (AC-DELCO #16188051) (CODE BDTF, BHZU, BJHJ, BJHK, BJHL, BJHM, BJHN, BJHP,	94-95	F (LT1)	1	16188051

cardiagn.com

	4-C12	3.670	MODULE, PWRT CONT (REMAN) (INCLS UNPROGRAMMED EPROM) (CONTAINS EPROM WHICH MUST BE PROGRAMED AT THE DEALERSHIP) (INCLS 3, 13) (AC-DELCO #16214399) ...	96	F (LT1)	1	16214399
5.		N.S.	CONNECTOR, INLINE-TO ENG HARN, ECM HARN (J4) (BLU) ...		.....		
6.	4-N20	2.559	RETAINER, ECM WRG HARN CONN (BLUE) (W/ACCESS HANDLE) (AC-DELCO #12191284)	94-97	F (LT1)	4	12191284
	4-N20	2.559	RETAINER, ECM WRG HARN CONN (BLACK) (32-WAY F)	95-97	F (LT1)	4	12129021
	4-N20	2.559	RETAINER, ECM WRG HARN CONN (CLEAR) (USE W/32-WAY CONN) (AC-DELCO #PT1478) ..	96-97	F (LT1)	4	12129022
	4-N20	2.559	RETAINER, ECM WRG HARN CONN (BLUE) (USE W/32-WAY CONN) (AC-DELCO #PT1479) ..	96-97	F (LT1)	4	12129023
	4-N20	2.559	RETAINER, ECM WRG HARN CONN (RED) (USE W/32-WAY CONN) (AC-DELCO #PT1483) ..	96-97	F (LT1)	4	12129024
	4-N20	2.559	RETAINER, ECM WRG HARN CONN (GRAY) (32-WAY)	96-97	F	LH	12129028
	4-N20	2.559	RETAINER, ECM WRG HARN CONN (GRAY) (STRAIN RELIEF) .	96-97	F	RH	12129030
	4-N20	2.559	RETAINER, ECM WRG HARN CONN (YELLOW) (USE FOR WIRE STRAIN RELIEF FOR 12-WAY FEMALE CONN) (14.865)	96	F	1	15304998
	4-N20	2.559	RETAINER, ECM WRG HARN CONN (BLUE) (RETAINS 40-WAY CONN)	97	F	2	12176408
7.		N.S.	CONNECTOR, INLINE-TO ENG HARN, ECM HARN (J2) (BLK) ...		.....		
8.		N.S.	CONNECTOR, INLINE-TO ENG HARN, ECM HARN (J3) (CLR) ...		.....		
9.	4-N14	2.530	CONNECTOR, INLINE-TO ENG HARN (BLACK) (10-WAY M) (AC-DELCO #PT505)	94-97	F	1	12117372
10.	4-N14	2.530	CONNECTOR, INLINE-TO FWD LP HARN (BLACK) (10-WAY F) (W/LEADS) (AC-DELCO #PT588)	94-97	F	1	12125676
	4-N14	2.530	CONNECTOR, INLINE-TO FWD LP HARN (GREEN) (2-WAY M) (14 875)	94-97	F	1	12117275
	4-N14	2.530	CONNECTOR, INLINE-TO FWD LP HARN (6-WAY F) (W/LEADS) (2.535) (AC-DELCO #PT246) ...	95	F	2	12101854
	4-N14	2.530	CONNECTOR, INLINE-TO FWD LP HARN (GREY) (2-WAY F, M/P 150 SLD W/LEADS) (4.710) (AC-DELCO #PT1357)	95-97	F	2	15306302

cardiagn.com

						MF03-094	
	4-N14	2.530	CONNECTOR, INLINE-TO FWD LP HARN (WHITE) (8-WAY F) (W/LEADS) (2.535) (AC-DELCO #PT444)	96-97	F (LT1)	1	12117271
11.		8.921	NUT, U TYPE, MULTI THD, PREV TORQ, M4.2X1.41TAP, 8.1REACH, 0.65-3.80 PNLS 1065 PZOR (ECM BRKT) (PART OF 1) (AC-DELCO #11513599)	94-97	.....	2	11513599
12.		8.900	BOLT, HEX W/CON WA, M6X1X20 (ECM BRKT)	94-97	.....	2	11514623
13.		N.S.	COVER, EPROM (W/SCREWS) (PART OF 4)		.....		
14.		N.S.	CONNECTOR, INLINE-TO ENG HARN, ECM HARN (J1) (RED) ...		.....		

RPO DEFINITIONS
LT1 – ENGINE-GAS, 8 CYL, 5.7L(5.7P),MFI,HO

cardiagn.com

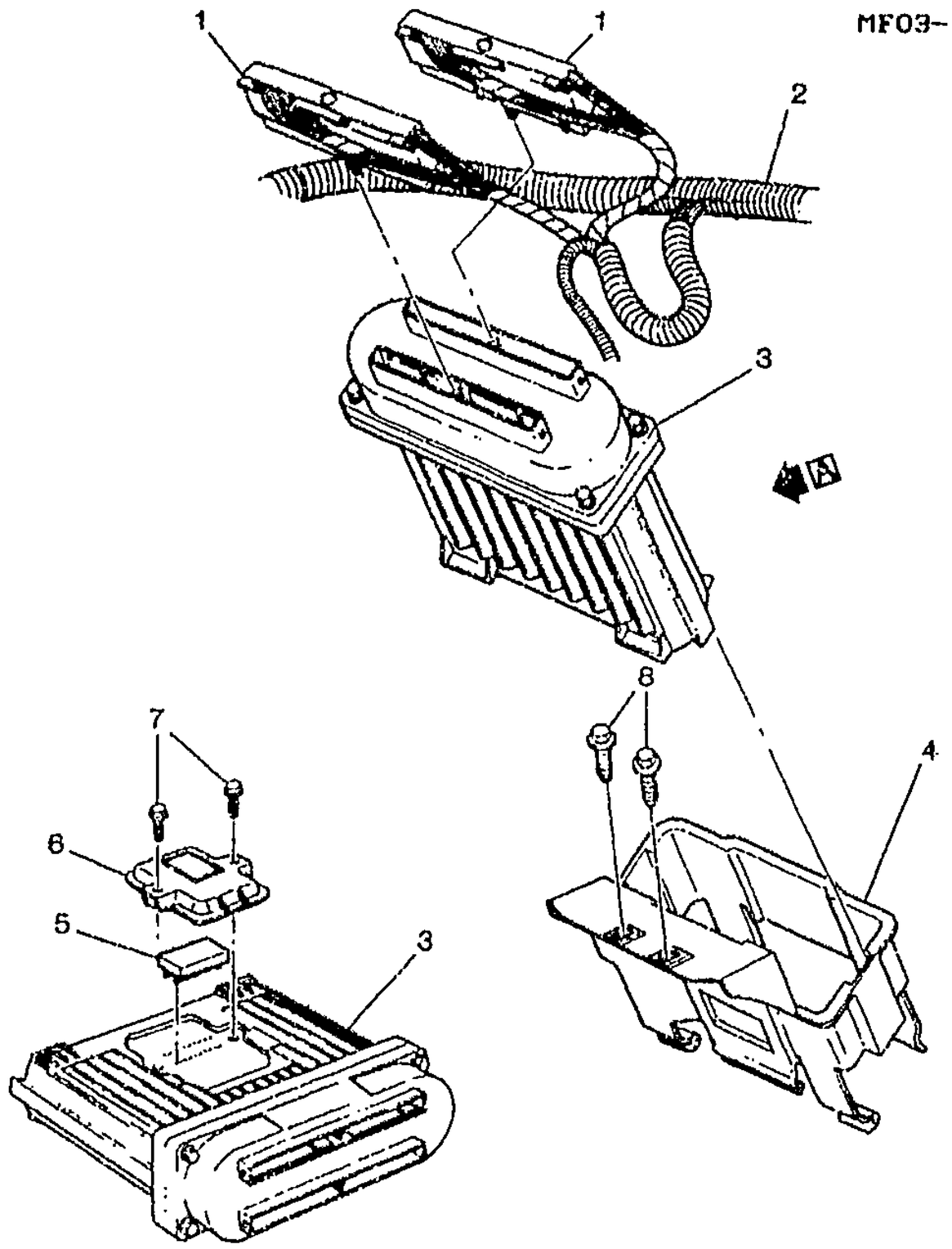

VIEW A

MF03-105

1995-2002 F P.C.M. MODULE & WIRING HARNESS (L36/3.8K)

1.		N.S.	CONNECTOR, MDL-ENG CONT (PART OF 2)				
2.	4-N11	2.525	HARNESS, ENG WRG (INCLS 1)	95	F (L36, M30, C60)	1	12145902
	4-N11	2.525	HARNESS, ENG WRG (INCLS 1)	96	F (L36, M49, C60)	1	12177326
	4-N11	2.525	HARNESS, ENG WRG (INCLS 1)	96	F (L36, M49, C41)	1	12177451
	4-N11	2.525	HARNESS, ENG WRG (INCLS 1)	96	F (L36, M30, C60, UD6)	1	12177453
	4-N11	2.525	HARNESS, ENG WRG (INCLS 1)	96	F (L36, M30, C60) (EXC UD6)	1	12177454
	4-N11	2.525	HARNESS, ENG WRG (INCLS 1)	97	F (L36, M30, C60) (EXC ABN, UD6)	1	12145606
	4-N11	2.525	HARNESS, ENG WRG (INCLS 1)	97	F (L36, M49, C60) (EXC ABN)	1	12145607
	4-N11	2.525	HARNESS, ENG WRG (INCLS 1)	97	F (L36, M30, C60, UD6)	1	12145609
	4-N11	2.525	HARNESS, ENG WRG (INCLS 1)	98	F (L36, M30, C60)	1	12177562
	4-N11	2.525	HARNESS, ENG WRG (INCLS 1)	98	F (L36, M49, C60)	1	12177563
	4-N11	2.525	HARNESS, ENG WRG (INCLS 1)	99	F (L36, M30)	1	12177365

cardiagn.com

	4–N11	2.525	**HARNESS**, ENG WRG (INCLS 1)	00–02	F (L36, M30)	1	12177654
	4–N11	2.525	**HARNESS**, ENG WRG (INCLS 1)	00–02	F (L36, M49)	1	12177655
3.	4–C12	3.670	**MODULE**, PWRT CONT (REMAN) (INCLS 5–7) (REQUIRES PROGRAMMING) (AC–DELCO #16227797)	97	F (L36)	1	16227797
	4–C12	3.670	**MODULE**, PWRT CONT (REMAN) (INCLS 5–7) (AC–DELCO #16236757)	98	F (L36)	1	16236757
	4–C12	3.670	**MODULE**, PWRT CONT (REMAN) (INCLS 5–7) (AC–DELCO #9374997)	99	F (L36)	1	9374997
	4–C12	3.670	**MODULE**, PWRT CONT (REMAN) (INCLS 5–7) (REQUIRES PROGRAMMING PRIOR TO PROPER OPERATION IN VEHICLE) (AC–DELCO #9380717)	00–02	F (L36)	1	9380717
	4–C12	3.670	**MODULE**, PWRT CONT (REMAN) (INCLS 5–7) (AC–DELCO #12209624) (DMCW)	01–02	F (L36, M30, GU4) (EXC K29)	1	12209624
	4–C12	3.670	**MODULE**, PWRT CONT (REMAN) (INCLS 5–7) (AC–DELCO #12209624) (DMCX)	01–02	F (L36, M30, GU4, K29)	1	12209624
	4–C12	3.670	**MODULE**, PWRT CONT (REMAN) (INCLS 5–7) (AC–DELCO #12209624) (DMCZ)	01–02	F (L36, M30, GU6, K29, NF7)	1	12209624
	4–C12	3.670	**MODULE**, PWRT CONT (REMAN) (INCLS 5–7) (AC–DELCO #12209624) (DMDA)	01–02	F (L36, M30, GU6, NA3)	1	12209624
	4–C12	3.670	**MODULE**, PWRT CONT (REMAN) (INCLS 5–7) (AC–DELCO #12209624) (DMCY)	01–02	F (L36, M30, GU6, NC1, NF7) (EXC K29)	1	12209624
	4–C12	3.670	**MODULE**, PWRT CONT (REMAN) (INCLS 5–7) (AC–DELCO #12209624) (DMDB)	01–02	F (L36, M30, GU6, NT3)	1	12209624
	4–C12	3.670	**MODULE**, PWRT CONT (REMAN) (INCLS 5–7) (AC–DELCO #12209624) (DMCT)	01–02	F (L36, M49, GU5, K29, NF7)	1	12209624
	4–C12	3.670	**MODULE**, PWRT CONT (REMAN) (INCLS 5–7) (AC–DELCO #12209624) (DMCS)	01–02	F (L36, M49, GU5, NC1, NF7) (EXC K29)	1	12209624
	4–C12	3.670	**MODULE**, PWRT CONT (REMAN) (INCLS 5–7) (AC–DELCO #12209624) (DMCU)	01–02	F (L36, M49, GU5, NT3)	1	12209624
	4–C12	3.670	**MODULE**, PWRT CONT (REMAN) (ID:DHPP) (INCLS 5–7) (REQUIRES PROGRAMMING PRIOR TO PROPER OPERATION IN VEHICLE) (AC–DELCO #9380717)	00	F (L36, M30, GU4, NF2) (EXC K29)	1	9380717
	4–C12	3.670	**MODULE**, PWRT CONT (REMAN) (ID:DHPR) (INCLS 5–7) (REQUIRES PROGRAMMING PRIOR TO PROPER OPERATION IN VEHICLE) (AC–DELCO #9380717)	00–02	F (L36, M30, GU4, NC1) (EXC K29)	1	9380717

cardiagn.com

4–C12	3.670	**MODULE**, PWRT CONT (REMAN) (ID:DHPS) (INCLS 5–7) (REQUIRES PROGRAMMING PRIOR TO PROPER OPERATION IN VEHICLE) (AC–DELCO #9380717)	00–02	F (L36, M30, GU6, NF2) (EXC K29)	1	9380717
4–C12	3.670	**MODULE**, PWRT CONT (REMAN) (ID:DHPT) (INCLS 5–7) (REQUIRES PROGRAMMING PRIOR TO PROPER OPERATION IN VEHICLE) (AC–DELCO #9380717)	00–02	F (L36, M30, GU6, NC1) (EXC K29)	1	9380717
4–C12	3.670	**MODULE**, PWRT CONT (REMAN) (ID:DHPU) (INCLS 5–7) (REQUIRES PROGRAMMING PRIOR TO PROPER OPERATION IN VEHICLE) (AC–DELCO #9380717)	00–02	F (L36, M30, GU6, NA7, QII)	1	9380717
4–C12	3.670	**MODULE**, PWRT CONT (REMAN) (ID:DHPW) (INCLS 5–7) (REQUIRES PROGRAMMING PRIOR TO PROPER OPERATION IN VEHICLE) (AC–DELCO #9380717)	00–02	F (L36, M49, GU5, NF2) (EXC K29)	1	9380717
4–C12	3.670	**MODULE**, PWRT CONT (REMAN) (ID:DHPX) (INCLS 5–7) (REQUIRES PROGRAMMING PRIOR TO PROPER OPERATION IN VEHICLE) (AC–DELCO #9380717)	00–02	F (L36, M49, GU5, NC1) (EXC K29)	1	9380717
4–C12	3.670	**MODULE**, PWRT CONT (REMAN) (ID:DHPY) (INCLS 5–7) (REQUIRES PROGRAMMING PRIOR TO PROPER OPERATION IN VEHICLE) (AC–DELCO #9380717)	00–02	F (L36, M49, GU5, K29, NA7, QII)	1	9380717
4–C12	3.670	**MODULE**, PWRT CONT (REMAN) (ID:DHPZ) (INCLS 5–7) (REQUIRES PROGRAMMING PRIOR TO PROPER OPERATION IN VEHICLE) (AC–DELCO #9380717)	00–02	F (L36, M30, GU4, K29, NF2)	1	9380717
4–C12	3.670	**MODULE**, PWRT CONT (REMAN) (ID:DHRA) (INCLS 5–7) (REQUIRES PROGRAMMING PRIOR TO PROPER OPERATION IN VEHICLE) (AC–DELCO #9380717)	00–02	F (L36, M30, GU6, K29, NF2) (EXC K29)	1	9380717
4–C12	3.670	**MODULE**, PWRT CONT (REMAN) (ID:DHRB) (INCLS 5–7) (REQUIRES PROGRAMMING PRIOR TO PROPER OPERATION IN VEHICLE) (AC–DELCO #9380717)	00–02	F (L36, M30, GU6, NA3) (EXC K29)	1	9380717

cardiagn.com

	4-C12	3.670	MODULE, PWRT CONT (REMAN) (ID:DHRC) (INCLS 5-7) (REQUIRES PROGRAMMING PRIOR TO PROPER OPERATION IN VEHICLE) (AC-DELCO #9380717)	00-02	F (L36, M30, GU5, K29, NF2) (EXC K29)	1	9380717
	4-C12	3.670	MODULE, PWRT CONT (REMAN) (INCLS UNPROGRAMMED EPROM) (INCLS 5-7) (AC-DELCO #16207326)	95-96	F (L36)	1	16207326
4.	4-C20	3.671	BRACKET, PCM	95-97	F (L36)	1	10284308
	4-C20	3.671	BRACKET, PCM	98	F (L36)	1	10275815
	4-C20	3.671	BRACKET, PCM	99-02	F	1	10275815
5.		N.S.	EPROM, ECM (PART OF 3)		.....		
6.		N.S.	COVER, PCM ACCESS (PART OF 3)		.....		
7.		8.900	BOLT/SCREW, HEX FL WA, M6X1X25, 17 OD, 6202M STL, 7111M, MACH (PART OF 3)	95-02	.....	AR	11516413
8.		8.900	BOLT/SCREW, HEX FL WA, M6X1X25, 17 OD, 6202M STL, 7111M, MACH (PCM BRKT)	95-02	.....	AR	11516413

RPO DEFINITIONS

ABN – SENSOR OXYGEN NON-HEATED
C41 – HEATER,OUTSIDE AIR,WITH FAN AND DEFROSTER
C60 – AIR CONDITIONER,FRONT,MANUAL CONTROLS
GU4 -- AXLE,REAR,3.08 RATIO
GU5 – AXLE,REAR,3.23 RATIO
GU6 – AXLE,REAR,3.42 RATIO
K29 – MODULE,POWERTRAIN CONTROL
L36 – ENGINE GAS, 6 CYL, 3.8K, MFI, V6, HO (ERV6 SERIES)
M30 – TRANSMISSION,AUTOMATIC 4 SPEED,4L60E,ELECTRONIC
M49 – TRANSMISSION MAN 5 SPD, BORG WARNER, 77MM, 3.75 1ST, .76 5TH, O/D
NA3 – EMISSION SYSTEM JAPAN
NA7 – EMISSION SYSTEM EUROPEAN
NC1 – EMISSION SYSTEM CALIFORNIA, LEV
NF2 -- EMISSION SYSTEM,FEDERAL,TIER 1
NF7 – EMISSION SYSTEM FEDERAL, NLEV
NT3 – EMISSION SYSTEM EEC 00
QII – TIRE ALL P215/60R16 BW R/PE ST TL AL3 94H
UD6 – ALARM,EXHAUST TEMPERATURE(EXPORT)

cardiagn.com

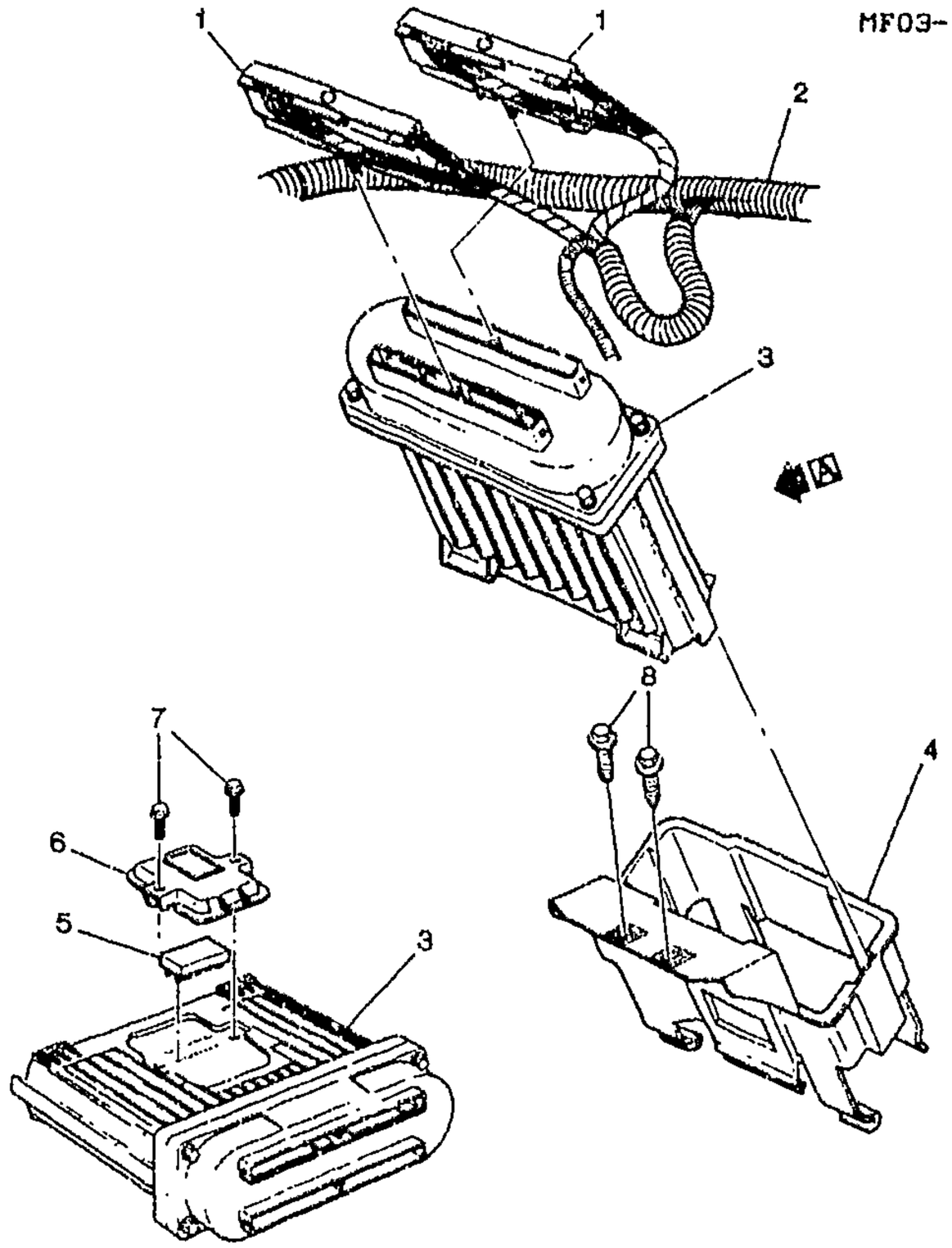

VIEW A

MF03-1051

1998-2002 F P.C.M. MODULE & WIRING HARNESS (LS1/5.7G)

1.		N.S.	CONNECTOR, MDL-ENG CONT (PART OF 2)				
2.	4-N11	2.525	HARNESS, ENG WRG (INCLS 1)	00-02	F (M30)	1	12177654
	4-N11	2.525	HARNESS, ENG WRG (INCLS 1)	00-02	F (MM6)	1	12177655
	4-N11	2.525	HARNESS, ENG WRG (INCLS 1)	01-02	F (MM6)	1	12177653
	4-N11	2.525	HARNESS, ENG WRG (INCLS 1)	98	F (M30)	1	12177560
	4-N11	2.525	HARNESS, ENG WRG (INCLS 1)	99-02	F (M30)	1	12177652
3.	4-C12	3.670	MODULE, PWRT CONT (REMAN) (INCLS 5-7) (AC-DELCO #16238212)	98	F (LS1)	1	16238212
	4-C12	3.670	MODULE, PWRT CONT (REMAN) (INCLS 5-7) (REQUIRES PROGRAMMING PRIOR TO PROPER OPERATION IN	99-02	F (LS1)	1	9354896

cardiagn.com

	4-C12	3.670	MODULE, PWRT CONT (REMAN) (INCLS 5-7) (AC-DELCO #12200411) (DLWY)	01-02	F (LS1, GU2) (EXC K29)	1 12200411
	4-C12	3.670	MODULE, PWRT CONT (REMAN) (INCLS 5-7) (AC-DELCO #12200411) (DJZR)	01-02	F (LS1, GU2, K29)	1 12200411
	4-C12	3.670	MODULE, PWRT CONT (REMAN) (INCLS 5-7) (AC-DELCO #12200411) (DLXB)	01-02	F (LS1, GU2, K29, NA3, QLC)	1 12200411
	4-C12	3.670	MODULE, PWRT CONT (REMAN) (INCLS 5-7) (AC-DELCO #12200411) (DLXB)	01-02	F (LS1, GU2, K29, NF7, QLC)	1 12200411
	4-C12	3.670	MODULE, PWRT CONT (REMAN) (INCLS 5-7) (AC-DELCO #12200411) (DJZP)	01-02	F (LS1, GU2, NA3, NT3)	1 12200411
	4-C12	3.670	MODULE, PWRT CONT (REMAN) (INCLS 5-7) (AC-DELCO #12200411) (DJZN)	01-02	F (LS1, GU2, NC1, NF7)	1 12200411
	4-C12	3.670	MODULE, PWRT CONT (REMAN) (INCLS 5-7) (AC-DELCO #12200411) (DLXA)	01-02	F (LS1, GU2, NT3, QLC)	1 12200411
	4-C12	3.670	MODULE, PWRT CONT (REMAN) (INCLS 5-7) (AC-DELCO #12200411) (DLXD)	01-02	F (LS1, GU5, K29)	1 12200411
	4-C12	3.670	MODULE, PWRT CONT (REMAN) (INCLS 5-7) (AC-DELCO #12200411) (DLXC)	01-02	F (LS1, GU5, NC1)	1 12200411
	4-C12	3.670	MODULE, PWRT CONT (REMAN) (INCLS 5-7) (AC-DELCO #12200411) (DLXC)	01-02	F (LS1, GU5, NF7) (EXC K29)	1 12200411
	4-C12	3.670	MODULE, PWRT CONT (REMAN) (INCLS 5 -7) (AC-DELCO #12200411) (DLXF)	01-02	F (LS1, GU5, NM2)	1 12200411
	4-C12	3.670	MODULE, PWRT CONT (REMAN) (INCLS 5-7) (AC-DELCO #12200411) (DLXH)	01-02	F (LS1, MM6) (EXC K29)	1 12200411
	4-C12	3.670	MODULE, PWRT CONT (REMAN) (INCLS 5-7) (AC-DELCO #12200411) (DLXL)	01-02	F (LS1, MM6, K29)	1 12200411
	4-C12	3.670	MODULE, PWRT CONT (REMAN) (INCLS 5-7) (AC-DELCO #12200411) (DLXL)	01-02	F (LS1, MM6, K29, NF7, QLC)	1 12200411
	4-C12	3.670	MODULE, PWRT CONT (REMAN) (INCLS 5-7) (AC-DELCO #12200411) (DJZY)	01-02	F (LS1, MM6, NC1, NF7)	1 12200411
	4-C12	3.670	MODULE, PWRT CONT (REMAN) (INCLS 5-7) (AC-DELCO #12200411) (DLXK)	01-02	F (LS1, MM6, NT3)	1 12200411
	4-C12	3.670	MODULE, PWRT CONT (REMAN) (INCLS 5-7) (AC-DELCO #12200411) (DLXJ)	01-02	F (LS1, MM6, QLC) (EXC K29)	1 12200411
4.	4-C20	3.671	BRACKET, PCM	98	F (LS1)	1 10284308
	4-C20	3.671	BRACKET, PCM	99-02	F	1 10275815
5.		N.S.	EPROM, ECM (PART OF 3)		....	
6.		N.S.	COVER, PCM ACCESS (PART OF 3)		.....	

cardiagn.com

					MF03-1051
7.	8.900	**BOLT/SCREW**, HEX FL WA, M6X1X25, 17 OD, 6202M STL, 7111M, MACH (PART OF 3)	98-02	.....	AR 11516413
8.	8.900	**BOLT/SCREW**, HEX FL WA, M6X1X25, 17 OD, 6202M STL, 7111M, MACH (PCM BRKT)	98-02	.....	AR 11516413

RPO DEFINITIONS

GU2 – AXLE,REAR,2.73 RATIO
GU5 – AXLE,REAR,3.23 RATIO
K29 – MODULE,POWERTRAIN CONTROL
LS1 – ENGINE GAS, 8 CYL, 5.7L, SFI, ALUMINUM ENGINE
MM6 – TRANSMISSION MAN 6 SPD, BORG WARNER, 85MM, 1ST 2.66, 6TH 0.50, O/D
M30 – TRANSMISSION,AUTOMATIC 4 SPEED,4L60E,ELECTRONIC
NA3 – EMISSION SYSTEM JAPAN
NC1 – EMISSION SYSTEM CALIFORNIA, LEV
NF7 – EMISSION SYSTEM FEDERAL, NLEV
NM2 – EMISSION SYSTEM EXPORT, LEADED FUEL
NT3 – EMISSION SYSTEM EEC 00
QLC – TIRE,ALL P245/50ZR16/N BL R/PE ST TL HWY

cardiagn.com

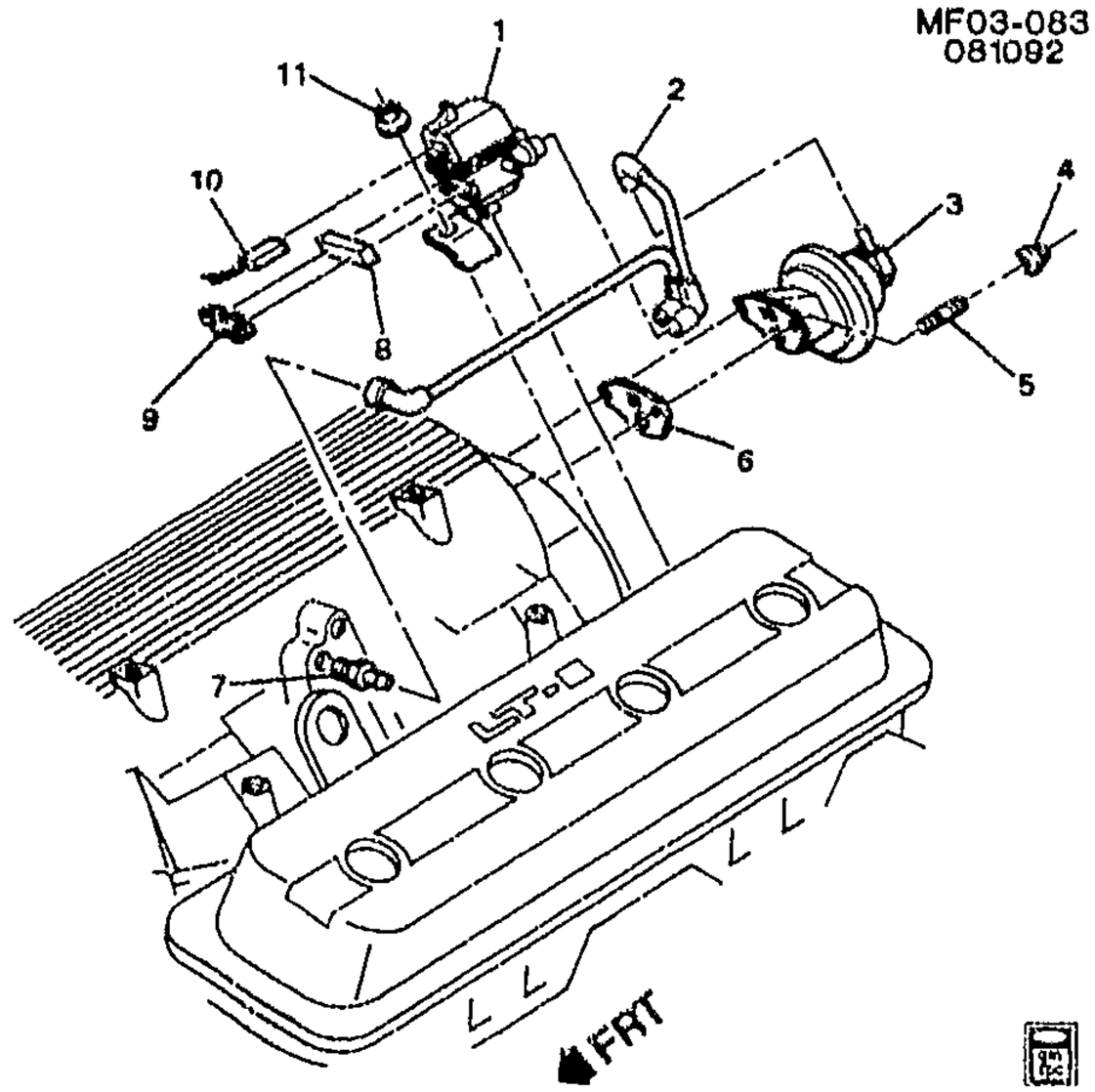

MF03-083

1993 F E.G.R. VALVE & RELATED PARTS (LT1/5.7P)

1.	4-C12	3.670	**SOLENOID**, EGR VAC REG VLV (INCLS 8, 9) (AC-DELCO #214-396)	93	F (LT1)	1	1997223
2.	4-C21	3.675	**HARNESS**, EGR VLV VAC	93	F (LT1)	1	10105323
3.	4-C12	3.670	**VALVE**, EGR (PROD #17092160) (FOR EXPORT REPL EGR VLV W/ EGR VLV CVR & VAC CAP) (AC-DELCO #214-5083)	93	F (LT1, MD8)	1	17113381
	4-C12	3.670	**VALVE**, EGR (PROD 17087241) (AC-DELCO #214-5075)	93	F (LT1, M28, M29)	1	17113373
4.		8.917	**NUT**, HFH 5/16-18X.20 286M PC .67-OD (EGR VLV)	93		2	1359887
5.	4-C20	3.671	**STUD**, EGR VLV (5/16 X 18 X 1 43/64) (1.428)	93	F (LT1)	2	14080362
6.	4-C24	3.680	**GASKET**, EGR VLV (AC-DELCO #219-21)	93	F (LT1)	1	12337972
7.	4-C24	3.680	**CONNECTOR**, EMIS CONT VAC HARN	93	F (LT1)	1	12550629
8.	4-C20	3.671	**FILTER**, EGR VAC REG SOL VLV (PART OF 1) (3.140) (AC-DELCO #219-15)	93	F (LT1)	1	1977880
9.	4-C20	3.671	**CLAMP**, EGR VAC REG SOL VLV FLTR (PART OF 1)	93	F (LT1)	1	1985870
10.	4-C12	3.670	**CONNECTOR**, SOL-EGR VLV (BLACK) (2-WAY F W/LEADS) (AC-DELCO #PT374)	93	F (LT1)	1	12102747
11.		8.917	**NUT**, .375 16 HEX (EGR C/VLV RLY SOL)	93		1	14057004

cardiagn.com

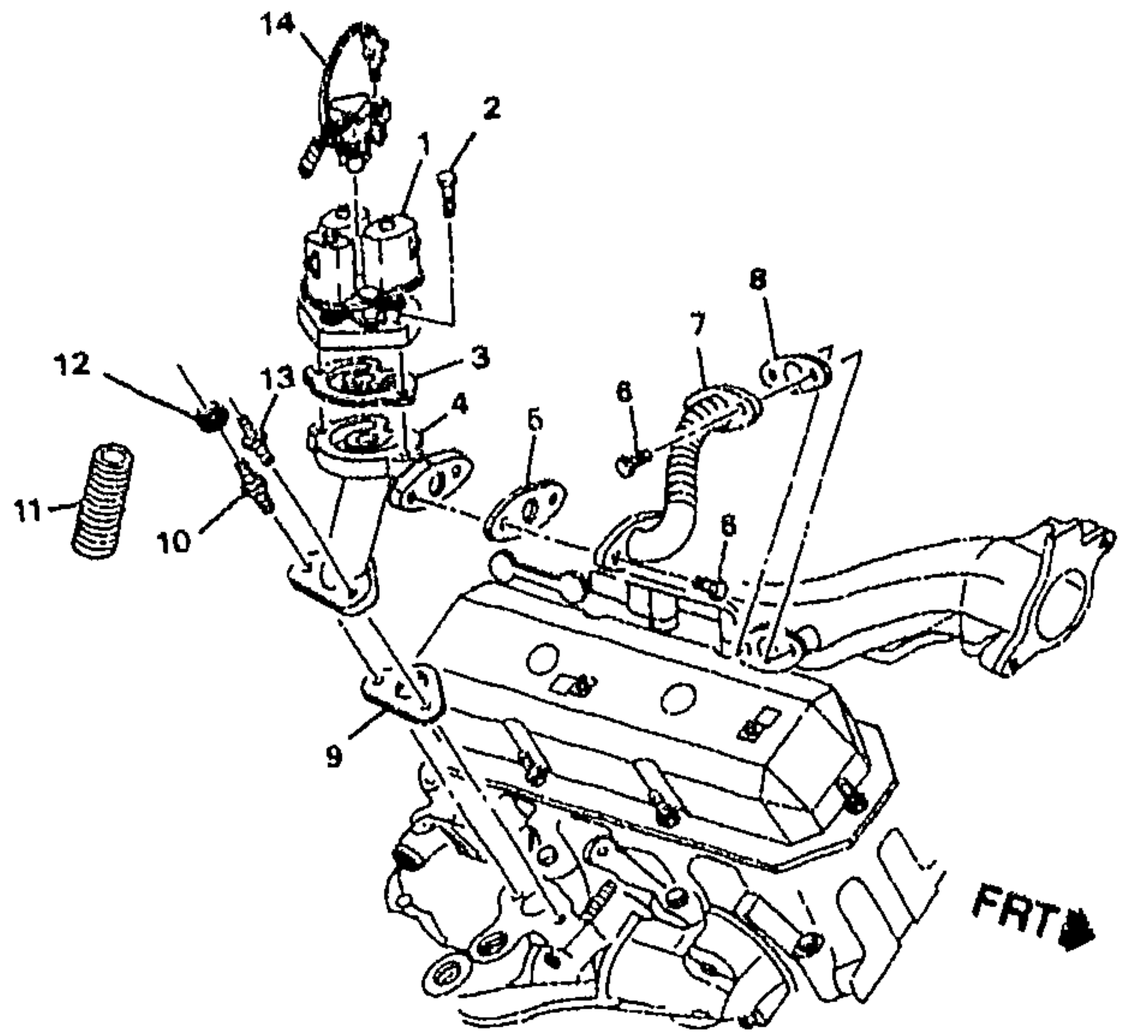

MF03-082

1993-1995 F E.G.R. VALVE & RELATED PARTS (L32/3.4S)

1.	4-C12	3.670	VALVE, EGR (PROD 17091147) (W/O GASKET) (AC-DELCO #214-5004)	93-95	F (L32)	1	17091147
2.	4-C20	3.671	BOLT, EGR VLV (M8X1.25X25) (8.900)	93-95	F (L32)	1	11508040
3.	4-C24	3.680	GASKET, EGR VLV (3.671) (AC-DELCO #219-323)	93-95	F (L32)	1	10100094
4.	4-C24	3.680	ADAPTER, EGR VLV	93-95	F (L32)	1	10099940
5.	4-C24	3.680	GASKET, EGR VLV PIPE (AC-DELCO #10239631)	93-95	F (L32)	1	10239631
6.	4-C21	3.675	BOLT, EGR VLV PIPE (0.862)	93-95	F (L32)	4	14079747
7.	4-C21	3.675	PIPE, EGR VLV	93-95	F (L32)	1	10217283
8.	4-C24	3.680	GASKET, EGR VLV PIPE	93-95	F (L32)	1	10115838
9.	4-C20	3.671	GASKET, EGR VLV ADAP	93-95	F (L32)	1	10191741
10.	4-C21	3.675	STUD, EGR VLV PIPE (M8X1.25X20 / M8X1.25X15) (2.183) (AC-DELCO #14054461)	93-95	F (L32)	1	14054461
11.	4-C21	3.675	SHIELD, EGR VLV PIPE HT	93-95	F (L32)	1	10215538
12.		8.917	NUT, HFH, M8X1.25 17.9 OD, 738 THK, 13MM HEX, 10, ZF (EGR VLV PIPE) (8.915) (AC-DELCO #11514596)	93-95		1	11514596
13.	4-C21	3.675	STUD, EGR VLV PIPE (M6X1/M8X1.25) (3.265)	93-95	F (L32)	1	14089222
14.	4-C12	3.670	CONNECTOR, SOL-EGR VLV (4-WAY F) (W/LEADS) (AC-DELCO #PT301)	93-95	F (L32)	1	12102614

cardiagn.com

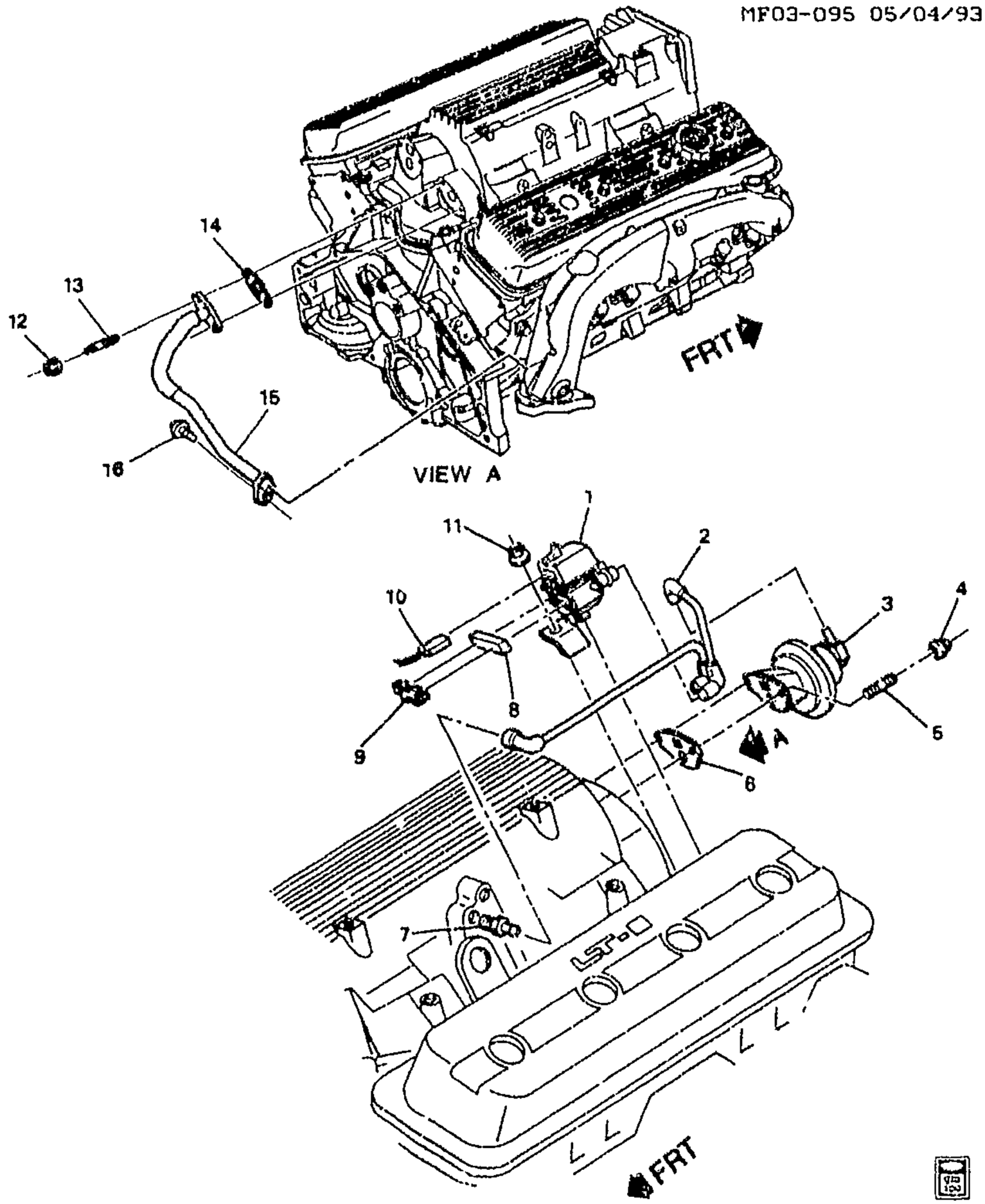

MF03-095

1994-1997 F E.G.R. VALVE & RELATED PARTS (LT1/5.7P)

1.	4-C12	3.670	**SOLENOID**, EGR VAC REG VLV (INCLS 8, 9) (AC-DELCO #214-396)	94-97	F (LT1)	1	1997223
2.	4-C21	3.675	**HARNESS**, EGR VLV VAC	94-97	F (LT1)	1	10105323
3.	4-C12	3.670	**VALVE**, EGR (PROD #17092160) (FOR EXPORT REPL EGR VLV W/ EGR VLV CVR & VAC CAP)	94	F (LT1) (EXC NM8)	1	17113381

cardiagn.com

	4-C12	3.670	VALVE, EGR (PROD #17092160) (FOR EXPORT REPL EGR VLV W/ EGR VLV CVR & VAC CAP) (AC-DELCO #214-5083)	95-97	F (LT1, MM6) (EXC NM8)	1	17113381
	4-C12	3.670	VALVE, EGR (PROD #17092160) (FOR EXPORT REPL EGR VLV W/ EGR VLV CVR & VAC CAP) (AC-DELCO #214-5083)	95	F (LT1, M30, NA5) (EXC NM8)	1	17113381
	4-C12	3.670	VALVE, EGR (PROD 17092172) (FOR EXPORT REPL EGR W/ EGR CVR & VAC CAP) (AC-DELCO #214-5084)	95	F (LT1, M30, NB6) (EXC NM8)	1	17113382
	4-C12	3.670	VALVE, EGR (PROD 17092172) (FOR EXPORT REPL EGR W/ EGR CVR & VAC CAP) (AC-DELCO #214-5084)	96-97	F (LT1, M30) (EXC NM8)	1	17113382
4.		8.917	NUT, HFH 5/16-18X.20 286M PC .67-OD (EGR VLV)	94-97	.....	2	1359887
5.	4-C20	3.671	STUD, EGR VLV (5/16 X 18 X 1 43/64) (1.428)	94-97	F (LT1)	2	14080362
6.	4-C24	3.680	GASKET, EGR VLV (AC-DELCO #219-21)	94-97	F (LT1)	1	12337972
7.	4-C24	3.680	CONNECTOR, EMIS CONT VAC HARN (3.278) (1 PORT HOSE CONN 4.5 OD, SAE 1113, PZOR)	94-97	F (LT1)	1	14092470
8.	4-C20	3.671	FILTER, EGR VAC REG SOL VLV (PART OF 1) (3.140) (AC-DELCO #219-15)	94-97	F (LT1)	1	1977880
9.	4-C20	3.671	CLAMP, EGR VAC REG SOL VLV FLTR (PART OF 1)	94-97	F (LT1)	1	1985870
10.	4-C12	3.670	CONNECTOR, SOL-EGR VLV (BLACK) (2-WAY F W/LEADS) (AC-DELCO #PT374)	94-97	F (LT1)	1	12102747
11.		8.917	NUT, .375 16 HEX (EGR C/VLV RLY SOL)	94-97	.....	1	14057004
12.		8.917	NUT, HFH 5/16-18X.20 286M PC .67-OD (EGR VLV PIPE)	94-97	.....	2	1359887
13.	4-C21	3.675	STUD, EGR VLV PIPE (5/16 X 18 X 1 43/64) (1.428)	94-97	F (LT1)	2	14080362
14.	4-C24	3.680	GASKET, EGR VLV PIPE (3.675) .	94-97	F (LT1)	1	10055726
15.	4-C21	3.675	PIPE, EGR VLV	94-97	F (LT1)	1	12551318
16.	4-C21	3.675	BOLT, EGR VLV PIPE	94-97	F (LT1)	1	10222897

RPO DEFINITIONS

LT1 -- ENGINE-GAS, 8 CYL, 5.7L(5.7P),MFI,HO
MM6 -- TRANSMISSION MAN 6 SPD, BORG WARNER, 85MM, 1ST 2.66, 6TH 0.50, O/D
M30 -- TRANSMISSION,AUTOMATIC 4 SPEED,4L60E,ELECTRONIC
NA5 -- EMISSION SYSTEM,FEDERAL REQUIREMENTS
NB6 -- EMISSION SYSTEM CALIFORNIA,TIER 1
NM8 -- EMISSION SYSTEM,LEADED FUEL(EXPORT)

cardiagn.com

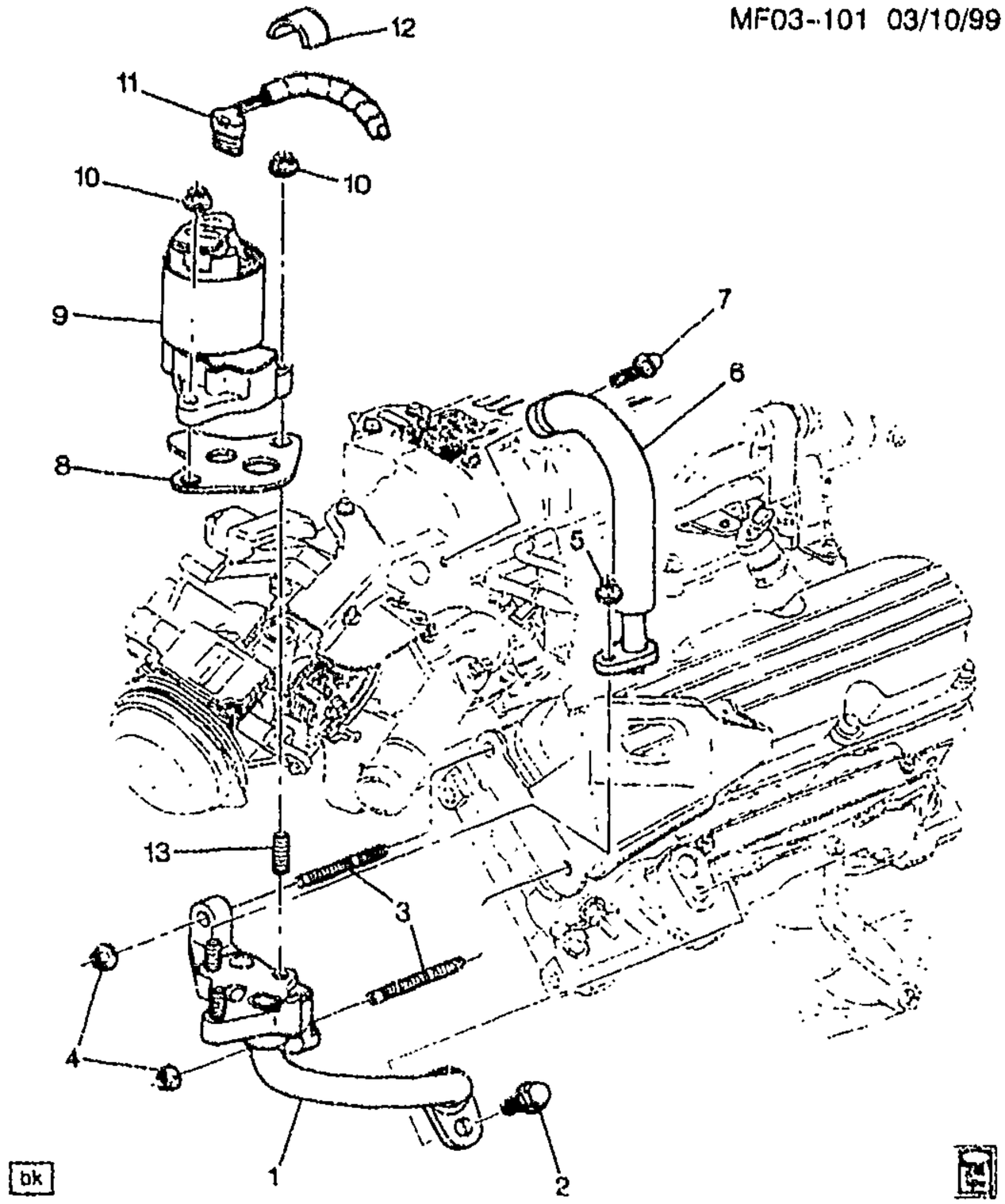

MF03-101

1995-2002 F E.G.R. VALVE & RELATED PARTS (L36/3.8K)

1.	4-C24	3.680	ADAPTER, EGR VLV	95-99	F (L36)	1	24504960
	4-C24	3.680	ADAPTER, EGR VLV	00-02	F (L36)	1	24508446
2.	4-C21	3.675	BOLT, EGR VLV ADAP PIPE (M8X1.25X25) (8.900)	95-02	F	1	11508040
3.	4-C20	3.671	STUD, EGR VLV ADAP	95-02	F (L36)	2	24504213
4.		8.915	NUT, HFH, 10X1.5 6H THD, 21.3 OD, 9.8 THK 13 HEX DR, GRD 9, ZF (EGR VLV ADAP) (8.917)	95-02	F	2	10255857
5.		8.917	NUT, HFH, M8X1.25, 17.9 OD, 738 THK, 13MM HEX, 10, ZF (EGR VLV ADAP) (8.915) (AC-DELCO #11514596)	95-02	F	1	11514596
6.	4-C21	3.675	PIPE, EGR VLV OTLT	95-99	F (L36)	1	24506482
	4-C21	3.675	PIPE, EGR VLV OTLT	00-02	F (L36)	1	24508445
7.		8.900	BOLT, M8X1.25X25 9.8 (EGR VLV ADAP PIPE)	95-02	F	1	11508476
8.	4-C24	3.680	GASKET, EGR VLV (AC-DELCO #219-333)	95-02	F (L36)	1	12567275

cardiagn.com

9.	4-C12	3.670	VALVE, EGR (AC-DELCO #214-1034)	95-99	F (L36)	1	17113642
	4-C12	3.670	VALVE, EGR (AC-DELCO #214-1064)	02	F (L36)	1	12568589
	4-C12	3.670	VALVE, EGR (PROD 17200278) (AC-DELCO #214-1036)	00-02	F (L36)	1	17113644
10.		8.917	NUT, HFH, M8X1.25, 17.9 OD, 738 THK, 13MM HEX, 10, ZF (EGR VLV) (8.915) (AC-DELCO #11514596)	95-02	F	2	11514596
11.	4-C12	3.670	CONNECTOR, SOL-EGR VLV (5-WAY F) (W/LEADS) (AC-DELCO #PT747)	95-02	F (L36)	1	12126477
12.		N.S.	HEAT-REFLECTING TAPE				
13.	4-C20	3.671	STUD, EGR VLV ADAP (ONLY TO EGR ADAPT) (STRAIGHT, M8X1.25X16, M8X1.25X16, 36 TL, 9.8, PC.)	95-02	F (L36)	3	24501638

RPO DEFINITIONS

L36 – ENGINE GAS, 6 CYL, 3.8K, MFI, V6, HO (ERV6 SERIES)

cardiagn.com

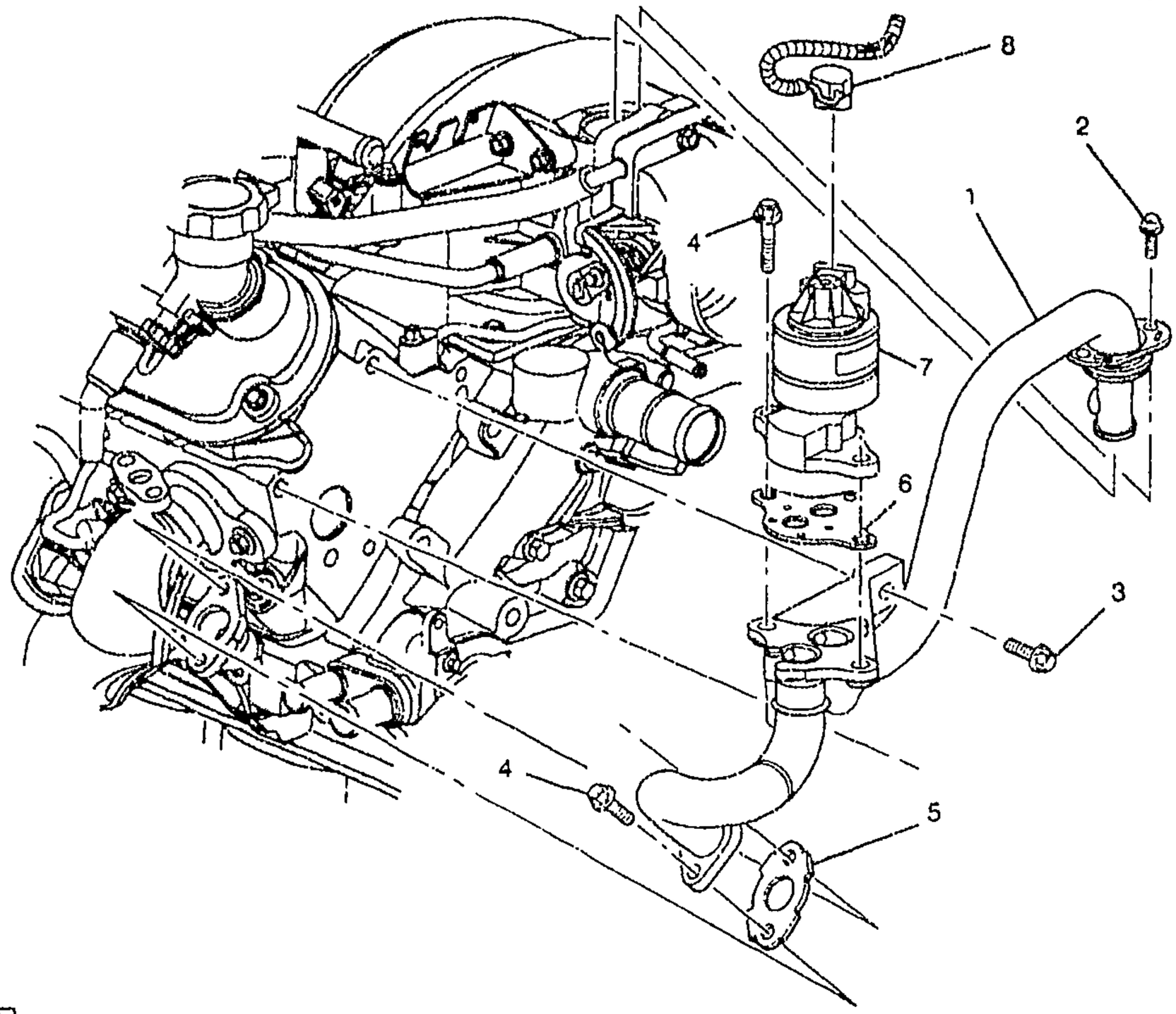

MF03-114

1998-2002 F E.G.R. VALVE & RELATED PARTS (LS1/5.7G)

1.	4-C21	3.675	PIPE, EGR VLV	98-99	F (LS1)	1	12556643
	4-C21	3.675	PIPE, EGR VLV	00-02	F (LS1)	1	12559425
		N.S.	PIPE, EGR VLV	02			
2.		8.900	BOLT-HFH, M8X1.25X40, 22 THD, 18 OD, 10.9, 7112M, MACH (EGR VLV PIPE)	98-02	F	2	11515792
3.		8.900	BOLT, M10X1.5X30, 10.9, 7114M, 22 OD, HDR PT (EGR VAC REG VLV BRKT)	98-02	F	2	11516328
4.		8.900	BOLT, HFH M8X1 25X40 9.8 POR (EGR VLV PIPE)	98-02		AR	11508575
5.	4-C24	3.680	GASKET, EGR VLV PIPE (AC-DELCO #219-229)	98-02	F (LS1)	1	12553047

cardiagn.com

							MF03-114
7.	4-C12	3.670	VALVE, EGR (AC-DELCO #214-5597)	98-02	F		17113589
8.	4-C12	3.670	CONNECTOR, SOL-EGR VLV (5-WAY F) (W/LEADS) (AC-DELCO #PT747)	98-02	F (LS1)	1	12126477

RPO DEFINITIONS
LS1 – ENGINE GAS, 8 CYL, 5.7L, SFI, ALUMINUM ENGINE

cardiagn.com

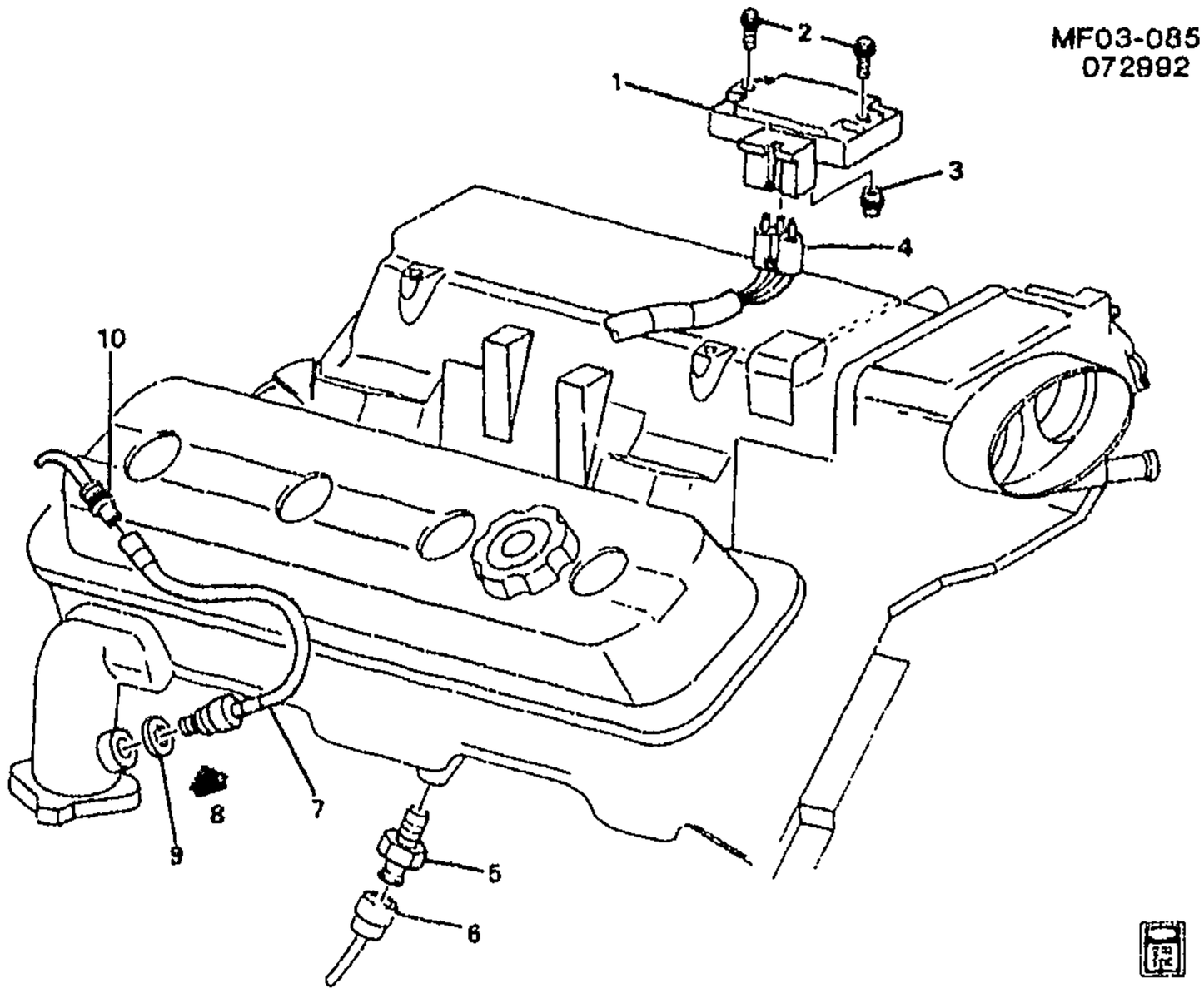

MF03-085

1993 F M.A.P. & OXYGEN SENSORS (LT1/5.7P)

1.	4-C26	3.682	**SENSOR**, MAP (1 PORT, 3 TERM, 2 BOLT HOLES) (AC-DELCO #213-185)	93	F (LT1)	1	16137039
2.		8.900	**BOLT**, HWH M5X.8X25 4.8 PEOR FULL THD (MAP SEN)	93		2	11508858
3.	4-C26	3.682	**SEAL**, MAP SEN (3.270)	93	F (LT1)	1	1635948
4.	4-C26	3.682	**CONNECTOR**, SEN-MAP (3-WAY M) (W/LEADS) (AC-DELCO #PT123)	93	F	1	12085502
5.	4-N8	2.383	**SENSOR**, KNOCK (AC-DELCO #213-96)	93	F (LT1)	1	10456126
6.	4-N8	2.383	**CONNECTOR**, SEN-KNOCK (1-WAY M, W/LEADS, HIGH TEMP) (1.150) (AC-DELCO #PT727)	93	F	1	12126456
7.	4-C26	3.682	**SENSOR**, OXY (PURPLE WIRE) (18 X 1.5) (TYPE #21 MATES W/12015791) (AC-DELCO #AFS21)	93	F (LT1)	2	25166816
8.		8.800	**LUBRICANT**, ANTI-SEIZE (DRY FILM), 4 OZ., BRUSH TOP CAN	93		AR	12377953

cardiagn.com

							MF03-085
9.	4-C24	3.680	GASKET, OXY SEN (REPAIR)	93	F	2	5617102
10.		8.965	CONNECTOR, WEATHER RESISTANT (TYPE 7 FEM) (EXH OXY SEN) (3.682) (AC-DELCO #PT517)	93	.....	1	12117385

RPO DEFINITIONS

LT1 – ENGINE-GAS, 8 CYL, 5.7L(5.7P),MFI,HO

cardiagn.com

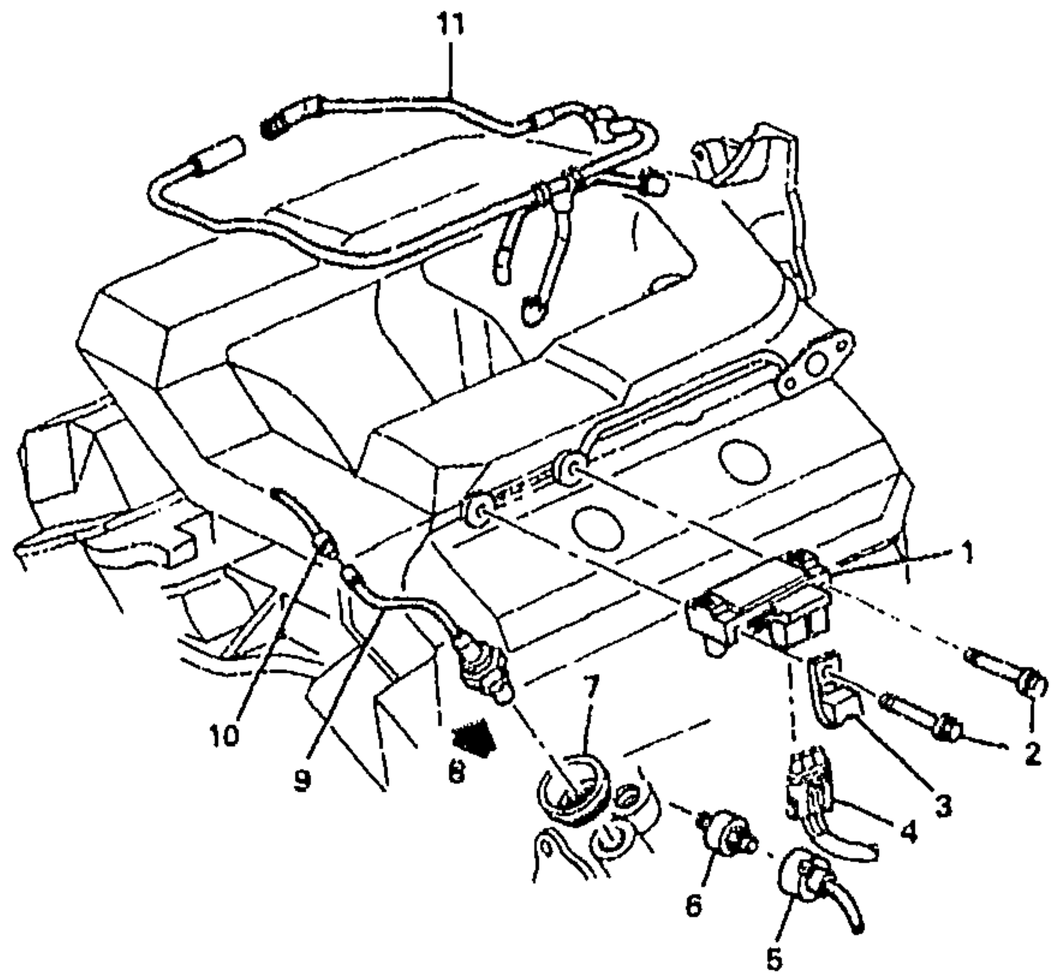

MF03-084
080492

MF03-084

MF03-084

1993-1995 F M.A.P. & OXYGEN SENSORS (L32/3.4S)

1.	4-C26	3.682	**SENSOR**, MAP (1 PORT, 3 TERM, 2 BOLT HOLES) (AC-DELCO #213-185)	93-95	F (L32)	1	16137039
2.		8.977	**BOLT**, HEX W/FL WA M4.2X1.41X50 TAP POR (MAP SEN)	93-95	F	2	11508306
3.		N.S.	**CLIP**, ENG WRG HARN				
4.	4-C26	3.682	**CONNECTOR**, SEN-MAP (3-WAY M) (W/LEADS) (AC-DELCO #PT123)	93-95	F	1	12085502
5.	4-N8	2.383	**CONNECTOR**, SEN-KNOCK (1-WAY M, W/LEADS, HIGH TEMP) (1.150) (AC-DELCO #PT727)	93-95	F	1	12126456
6.	4-N8	2.383	**SENSOR**, KNOCK (AC-DELCO #213-266)	93-95	F (L32)	1	10456207
7.	4-C24	3.680	**GASKET**, OXY SEN (REPAIR)	93-95	F	2	5617102
8.		8.800	**LUBRICANT**, ANTI-SEIZE (DRY FILM), 4 OZ., BRUSH TOP CAN (OXY SEN)	93-95		AR	12377953
9.	4-C26	3.682	**SENSOR**, HTD OXY (W/WIRE LEAD, M18X1.5-6E) (AC-DELCO #AFS22)	93-95	F (L32)	2	25162753
10.		8.965	**CONNECTOR**, WEATHER RESISTANT (TYPE 7 FEM) (EXH OXY SEN) (3.682) (AC-DELCO #PT517)	93-95		2	12117385

cardiagn.com

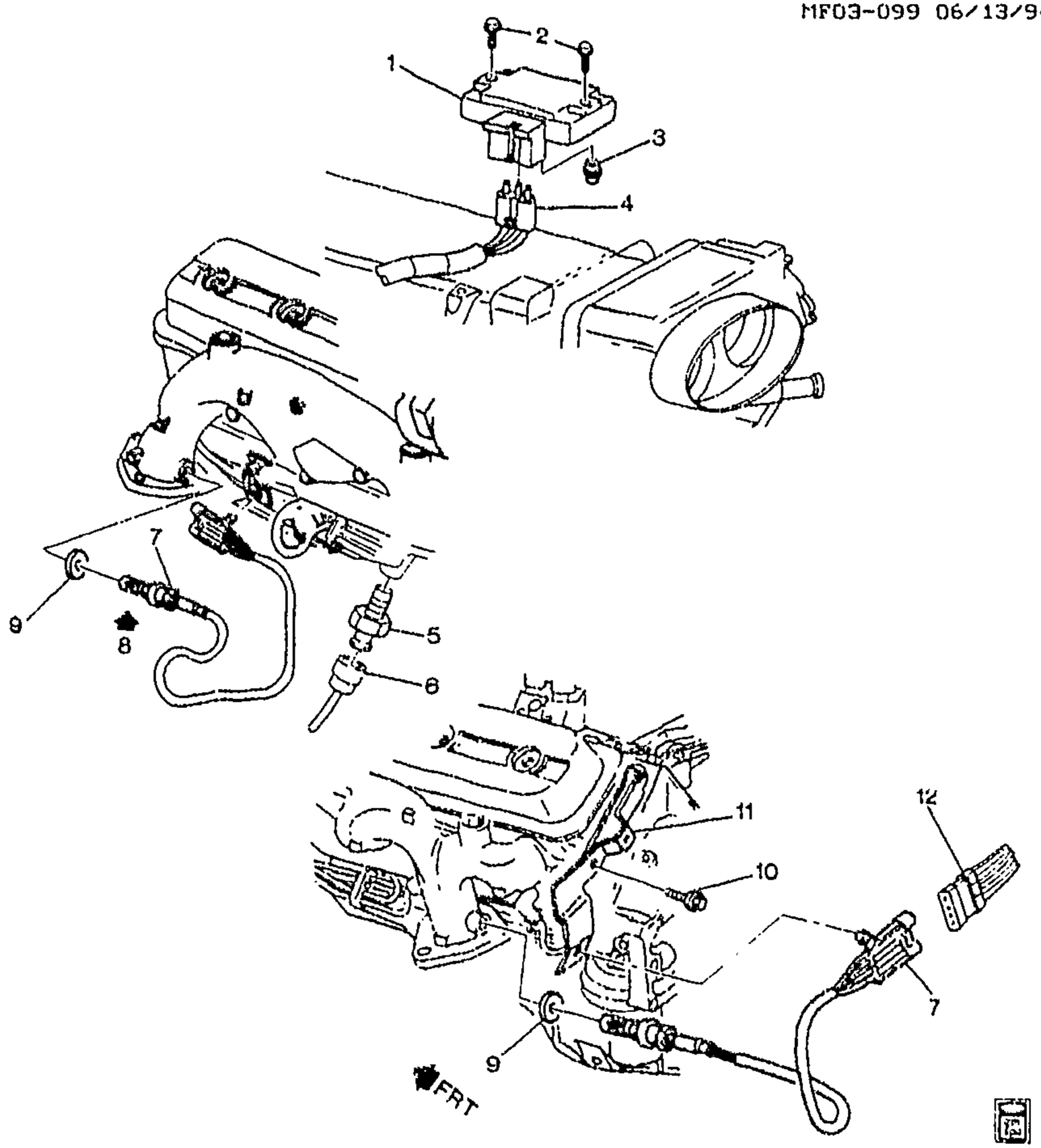

MF03-099

1994-1997 F M.A.P. & OXYGEN SENSORS (LT1/5.7P)

1.	4-C26	3.682	SENSOR, MAP (1 PORT, 3 TERM, 2 BOLT HOLES) (AC-DELCO #213-185)	94-97	F (LT1)	1	16137039
2.		8.000	BOLT, HWH M5X.8X25 4.8 PEOR FULL THD (MAP SEN)	94-97		2	11508858
3.	4-C26	3.682	SEAL, MAP SEN (3.270)	94-97	F (LT1)	1	1635948
4.	4-C26	3.682	CONNECTOR, SEN-MAP (3-WAY M) (W/LEADS) (AC-DELCO #PT123)	94-97	F	1	12085502
5.	4-N8	2.383	SENSOR, KNOCK (AC-DELCO #213-96)	94-95	F (LT1)	1	10456126
	4-N8	2.383	SENSOR, KNOCK (AC-DELCO #213-325)	96-97	F (LT1)	1	10456287

cardiagn.com

6.	4-N8	2.383	CONNECTOR, SEN-KNOCK (1-WAY M, W/LEADS, HIGH TEMP) (1.150) (AC-DELCO #PT727)	94-95	F	1	12126456
	4-N8	2.383	CONNECTOR, SEN-KNOCK (1-WAY M, W/LEADS, HIGH TEMP) (1.150) (AC-DELCO #PT727)	96-97	F (LT1)	1	12126456
7.	4-C26	3.682	SENSOR, HTD OXY (POSN 1) (IN EXH MANIFOLDS) (ENG OUT) (AC-DELCO #AFS75)	94-95	F (LT1)	2	25312184
	4-C26	3.682	SENSOR, HTD OXY (POSN 1) (IN EXH MANIFOLDS) (ENG OUT) (AC-DELCO #AFS75)	96-97	F (LT1) (EXC NM8, ABN)	2	25312184
8.		8.800	LUBRICANT, ANTI-SEIZE (DRY FILM), 4 OZ., BRUSH TOP CAN (REPAIR)	94-97	F	AR	12377953
9.	4-C24	3.680	GASKET, OXY SEN (REPAIR)	94-97	F	2	5617102
10.		8.900	BOLT, HEX 3/8-16 X 3/4 PH, 300M STL	94-97	.....	1	9424338
11.	4-C26	3.682	BRACKET, OXY SEN CONN RET	94-97	F (LT1)	1	12554460
12.	4-C26	3.682	CONNECTOR, INLINE-TO OXY SEN (4-WAY F) (W/LEADS, IN A ROW) (4.651) (AC-DELCO #PT368)	94-97	F (LT1)	2	12102741
	4-C26	3.682	CONNECTOR, INLINE-TO OXY SEN (4-WAY M) (W/LEADS) (2.530) (AC-DELCO #PT919) ...	96-97	F	1	15305801
	4-C26	3.682	CONNECTOR, INLINE-TO OXY SEN (4-WAY M) (W/O LEADS) (AC-DELCO #12162102)	97	F	2	12162102

RPO DEFINITIONS
ABN - SENSOR OXYGEN NON-HEATED
LT1 - ENGINE-GAS, 8 CYL, 5.7L(5.7P),MFI,HO
NM8 - EMISSION SYSTEM,LEADED FUEL(EXPORT)

cardiagn.com

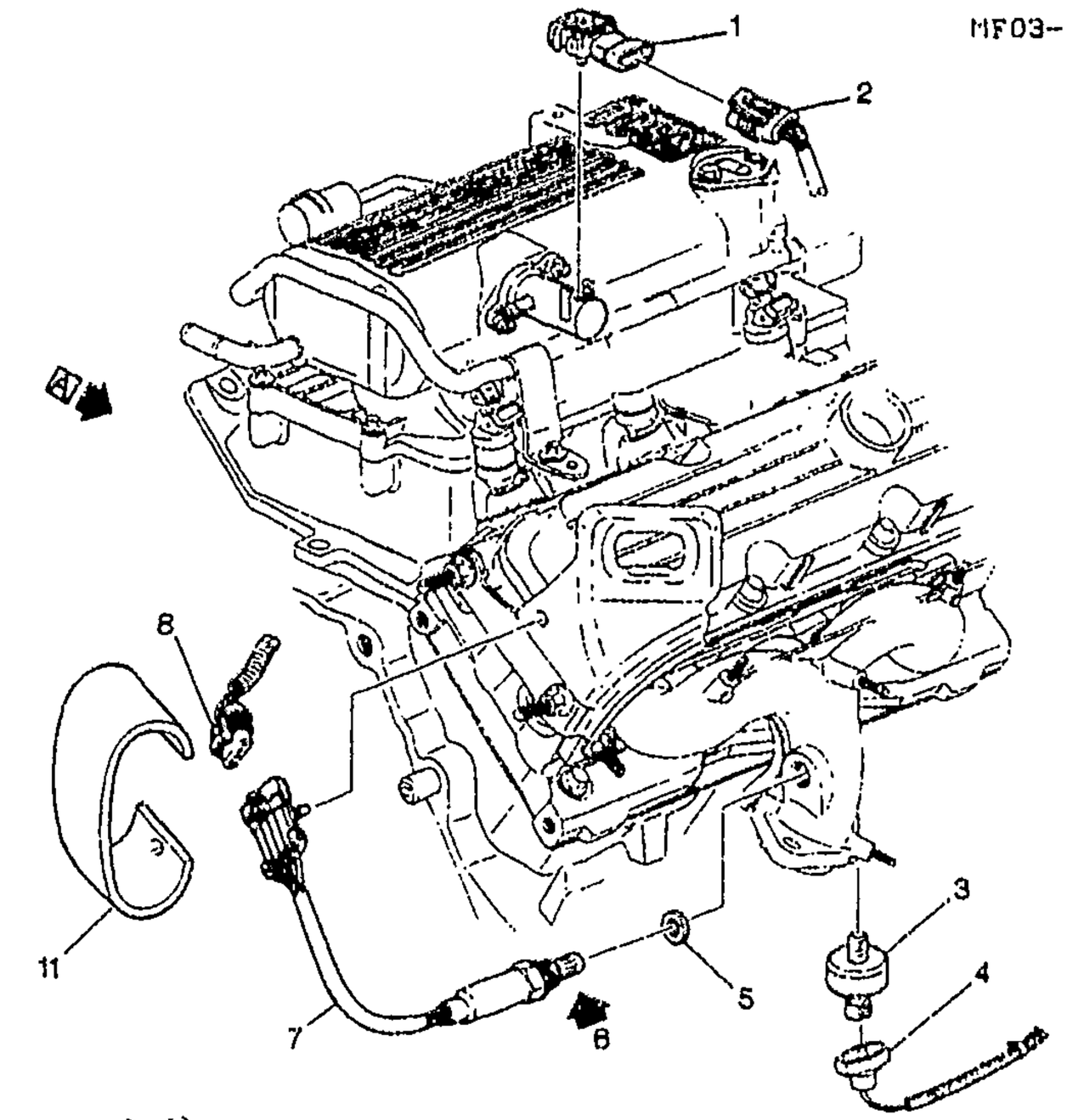

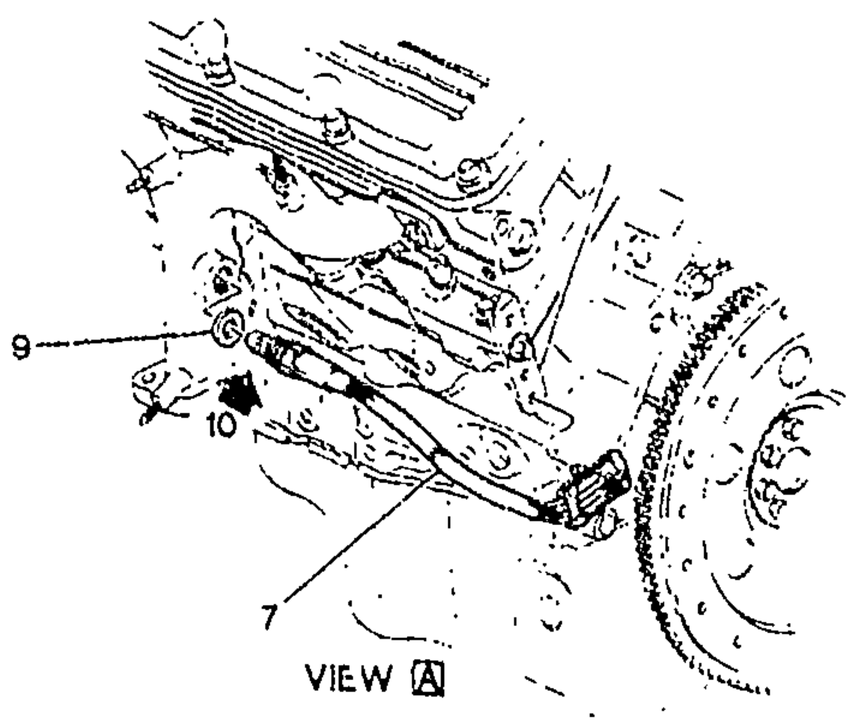

MF03-102

1995-2002 F M.A.P. & OXYGEN SENSORS (L36/3.8K)

1.	4-C26	3.682	SENSOR, MAP (AC-DELCO #213-351)	95-99 F (L36)	1	16249939
	4-C26	3.682	SENSOR, MAP (AC-DELCO #213-796)	00-02 F (L36)	1	9359409

cardiagn.com

2.	4-C12	3.670	CONNECTOR, SOL-EGR VLV (5-WAY F) (W/LEADS) (AC-DELCO #PT747)	95-02	F (L36)	1	12126477
3.	4-N8	2.383	SENSOR, KNOCK (AC-DELCO #213-274)	95	F (L36)	2	10456205
	4-N8	2.383	SENSOR, KNOCK (AC-DELCO #213-297)	96-02	F (L36)	2	10456215
4.	4-N8	2.383	CONNECTOR, SEN-KNOCK (1-WAY M, W/LEADS, HIGH TEMP) (1.150) (AC-DELCO #PT727)	95	F	1	12126456
	4-N8	2.383	CONNECTOR, SEN-KNOCK (1-WAY F) (W/O LEADS) (M/P 150 SLD)	96-97	F (L36) (EXC ABN, UD6)	1	12176800
	4-N8	2.383	CONNECTOR, SEN-KNOCK (1-WAY F) (W/LEADS) (M/P 150 SLD) (AC-DELCO #PT1233)	96-97	F (L36) (EXC ABN, UD6)	1	15306070
	4-N8	2.383	CONNECTOR, SEN-KNOCK (1-WAY F) (W/O LEADS) (M/P 150 SLD)	98-02	F (L36)	2	12176800
	4-N8	2.383	CONNECTOR, SEN-KNOCK (1-WAY F) (W/LEADS) (M/P 150 SLD) (AC-DELCO #PT1233)	98-02	F (L36)	2	15306070
	4-N8	2.383	CONNECTOR, SEN-KNOCK (BLACK) (2-WAY F W/LEADS) (AC-DELCO #PT169)	96	F (L36, ABN, UD6) (EXPORT)	1	12101899
5.	4-C24	3.680	GASKET, OXY SEN (FOR REPAIR PURPOSES)	95-02	F	2	5617102
6.		6.800	LUBRICANT, ANTI-SEIZE (DRY FILM), 4 OZ., BRUSH TOP CAN (FOR REPAIR PURPOSES)	95-02	F	AR	12377953
7.	4-C26	3.682	SENSOR, HTD OXY (POSN 1) (IN EXH MANIFOLD) (ENG OUT) (AC-DELCO #AFS109)	97-02	F (L36, M30, M49) (EXC ABN)	2	25312203
	4-C26	3.682	SENSOR, HTD OXY (POSN 1) (IN EXH MANIFOLDS) (ENG OUT) (AC-DELCO #AFS75)	95	F (L36, M30)	2	25312184
	4-C26	3.682	SENSOR, HTD OXY (POSN 1) (IN EXH MANIFOLDS) (ENG OUT) (AC-DELCO #AFS75)	96	F (L36) (EXC ABN)	2	25312184
8.	4-C26	3.682	CONNECTOR, INLINE-TO OXY SEN (4-WAY F) (W/LEADS, IN A ROW) (4.651) (AC-DELCO #PT368)	95-97	F (L36)	2	12102741
	4-C26	3.682	CONNECTOR, INLINE-TO OXY SEN (4-WAY M) (W/LEADS) (2.530) (AC-DELCO #PT919)	96-97	F	1	15305801
	4-C26	3.682	CONNECTOR, INLINE-TO OXY SEN (W/LEADS) (5.660) (AC-DELCO #PT605)	97	F (L36)	1	12125694
	4-C26	3.682	CONNECTOR, INLINE-TO OXY SEN (4-WAY M) (W/O LEADS) (AC-DELCO #12162102)	97	F	2	12162102
	4-C26	3.682	CONNECTOR, INLINE-TO OXY SEN (4-WAY M) (W/LEADS) (2.530) (AC-DELCO #PT919)	98-02	F (L36)	1	15305801

cardiagn.com

	4-C26	3.682	CONNECTOR, INLINE-TO OXY SEN (W/LEADS) (4-WAY F) (M/P 150 SLD) (18GA WIRE) (3.900) (AC-DELCO #PT1017)	98-02	F (L36)	2	15305876
9.	4-C24	3.680	GASKET, OXY SEN (FOR REPAIR PURPOSES)	95-02	F	2	5617102
10.		8.800	LUBRICANT, ANTI-SEIZE (DRY FILM), 4 OZ., BRUSH TOP CAN (FOR REPAIR PURPOSES)	95-02	F	AR	12377953
11.	4-N20	2.559	SHIELD, OXY SEN WRG HARN HT (NOT USED AFTER 1997) (NOT USED AFTER 1997)	95-97	F (L36, M30)	1	10260723

RPO DEFINITIONS
ABN – SENSOR OXYGEN NON-HEATED
L36 – ENGINE GAS, 6 CYL, 3 8K, MFI, V6, HO (ERV6 SERIES)
M30 – TRANSMISSION,AUTOMATIC 4 SPEED,4L60E,ELECTRONIC
M49 – TRANSMISSION MAN 5 SPD, BORG WARNER, 77MM, 3.75 1ST, .76 5TH, O/D
UD6 – ALARM,EXHAUST TEMPERATURE(EXPORT)

cardiagn.com

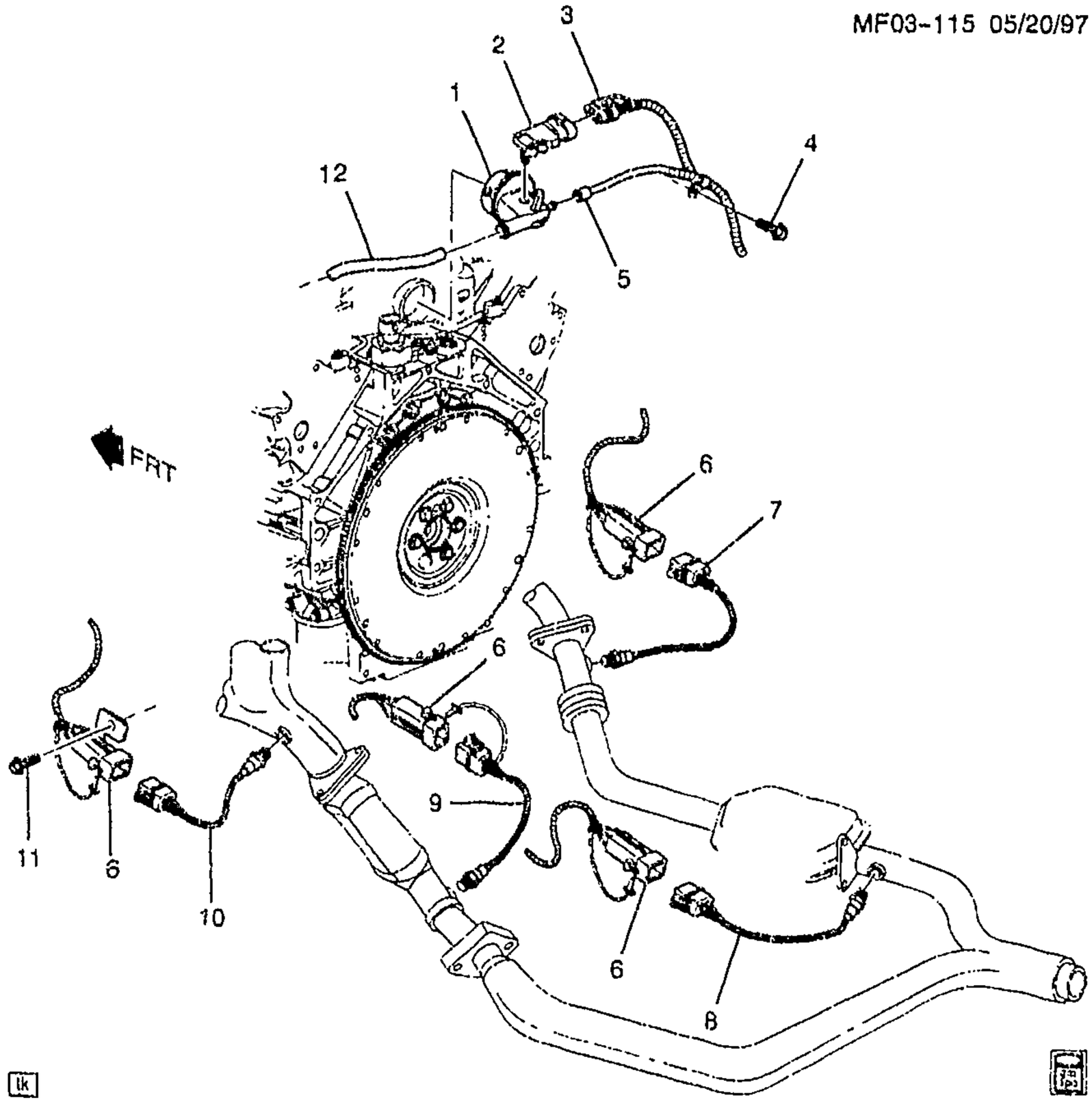

MF03-115

1998 F M.A.P. & OXYGEN SENSORS (LS1/5.7G)(EXC NM8)

1.		N.S.	PLUG, MAP SEN HOLE (PART OF MANIFOLD)		.....		
2.	4-C26	3.682	SENSOR, MAP (W/SEAL) (AC-DELCO #213-331)	98	F (LS1)	1	16212460
3.	4-C26	3.682	CONNECTOR, SEN-MAP (GRAY) (3-WAY F)	98	F (LS1)	1	12129946
4.		8.900	SCREW, HEX M10X1.5X16 9.8 PE	98	.....	1	11513783
5.	4-C21	3.675	HOSE, MAP SEN VAC	98	F (LS1)	1	12186660
6.	4-C26	3.682	CONNECTOR, INLINE-TO OXY SEN (4-WAY M) (W/LEADS) (2.530) (AC-DELCO #PT919) ...	98	F (LS1)	4	15305801
7.	4-C26	3.682	SENSOR, HTD OXY (POSN 2) (AC-DELCO #AFS97)	98	F (LS1) (EXC NM8)	RH	25312196
8.		N.S.	SENSOR, HTD OXY (POSN 3) ...		.....	RH	
9.		N.S.	SENSOR, HTD OXY (POSN 3) . .		.....	LH	

cardiagn.com

10.	4-C26	3.682	SENSOR, HTD OXY (POSN 1) (AC-DELCO #AFS98)	98	F (LS1) (EXC NM8)	LH	25312197
11.		8.900	BOLT, HEX, M8X1.25X16, 15 THD, 18 OD, 10.9, MAT, 7114M, FIN, MACH (ENG WRG HARN GND)	98	.....	AR	11515755
12.	4-N23	4.931	HOSE, P/B BOOS VAC	98	F (LS1)	1	10277331

RPO DEFINITIONS
LS1 -- ENGINE GAS, 8 CYL, 5.7L, SFI, ALUMINUM ENGINE
NM8 -- EMISSION SYSTEM,LEADED FUEL(EXPORT)

cardiagn.com

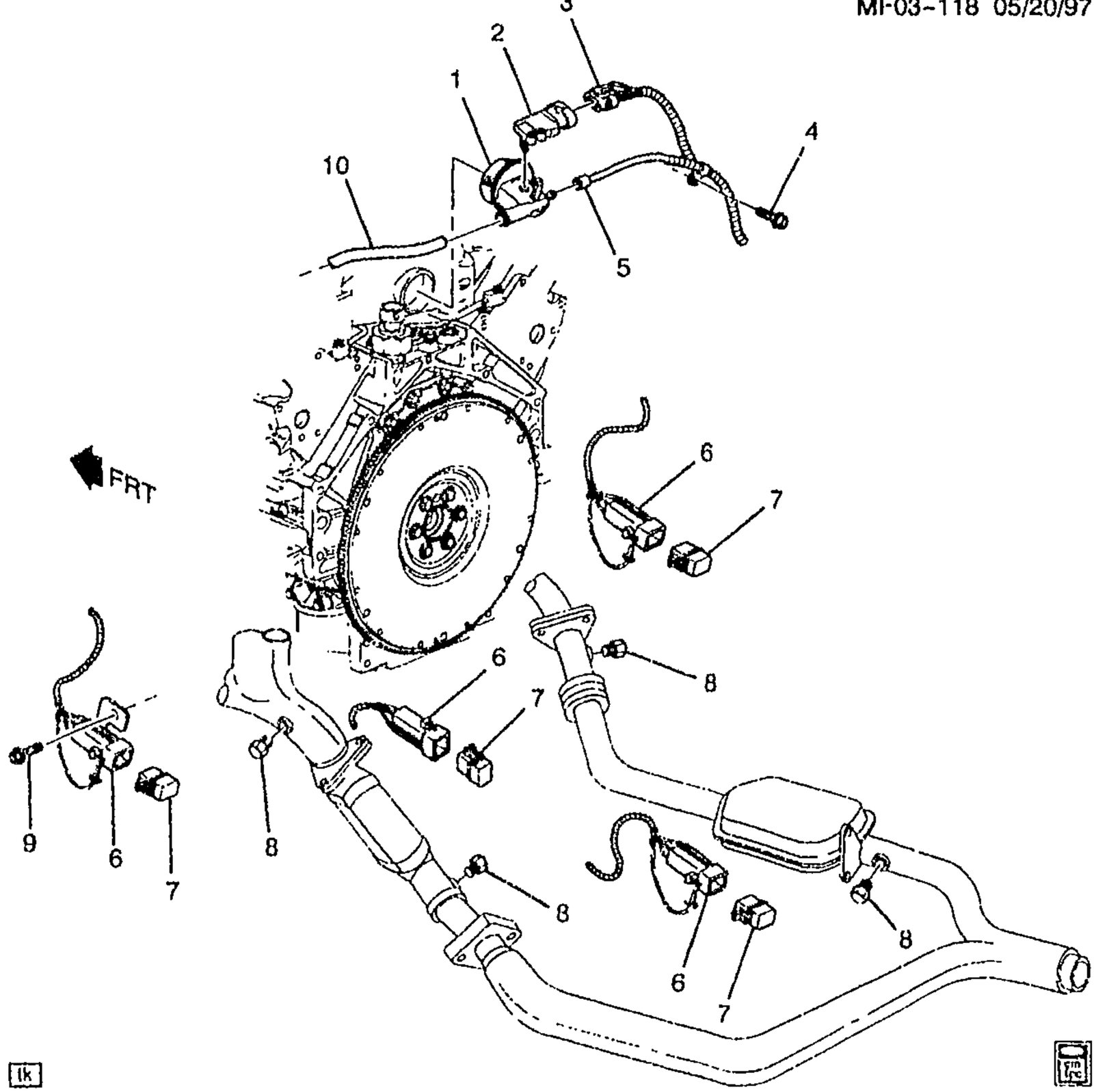

MF03-118

1998 F M.A.P. & OXYGEN SENSORS (LS1/5.7G)(NM8)
1999-2002 F M.A.P. & OXYGEN SENSORS (LS1/5.7G)(NM2)

1.		N.S.	PLUG, MAP SEN HOLE (PART OF MANIFOLD)				
2.	4-C26	3.682	SENSOR, MAP (W/SEAL) (AC-DELCO #213-331)	98-02	F (LS1)	1	16212460
3.	4-C26	3.682	CONNECTOR, SEN-MAP (GRAY) (3-WAY F)	98-02	F (LS1)	1	12129946
4.		8.900	SCREW, HEX M10X1.5X16 9.8 PE (MAP SEN VAC)	98-02		1	11513783
5.	4-C21	3.675	HOSE, MAP SEN VAC	98-02	F (LS1)	1	12186680
6.	4-C26	3.682	CONNECTOR, INLINE-TO OXY SEN (2-WAY) (W/O LEADS) (2.559)	98	(NM8)		12191286
	4-C26	3.682	CONNECTOR, INLINE-TO OXY SEN (2-WAY) (W/O LEADS) (2.559)	99-02	(NM2)		12191286

cardiagn.com

7.	4–C26	3.682	**CONNECTOR**, INLINE–TO OXY SEN (2–WAY) (W/O LEADS) (2.559)	98	(NM8)		12191286
	4–C26	3.682	**CONNECTOR**, INLINE–TO OXY SEN (2–WAY) (W/O LEADS) (2.559)	99–02	(NM2)		12191286
8.		8.971	**PLUG–EXT.** M18X1.5X10 TAPPERED 1:16, 19 OD, 22 OAL, SAE 1010/1012 (OXY SEN HOLE)	98–02	.....	AR	25509274
9.		8.900	**BOLT**, HEX, M8X1.25X16, 15 THD, 18 OD, 10.9, MAT, 7114M, FIN, MACH (ENG WRG HARN GND)	98–02	.....	AR	11515755
10.	4–N23	4.931	**HOSE**, P/B BOOS VAC	98–02	F (LS1)	1	10277331

RPO DEFINITIONS

LS1 – ENGINE GAS, 8 CYL, 5.7L, SFI, ALUMINUM ENGINE
NM2 – EMISSION SYSTEM EXPORT, LEADED FUEL
NM8 – EMISSION SYSTEM,LEADED FUEL(EXPORT)

cardiagn.com

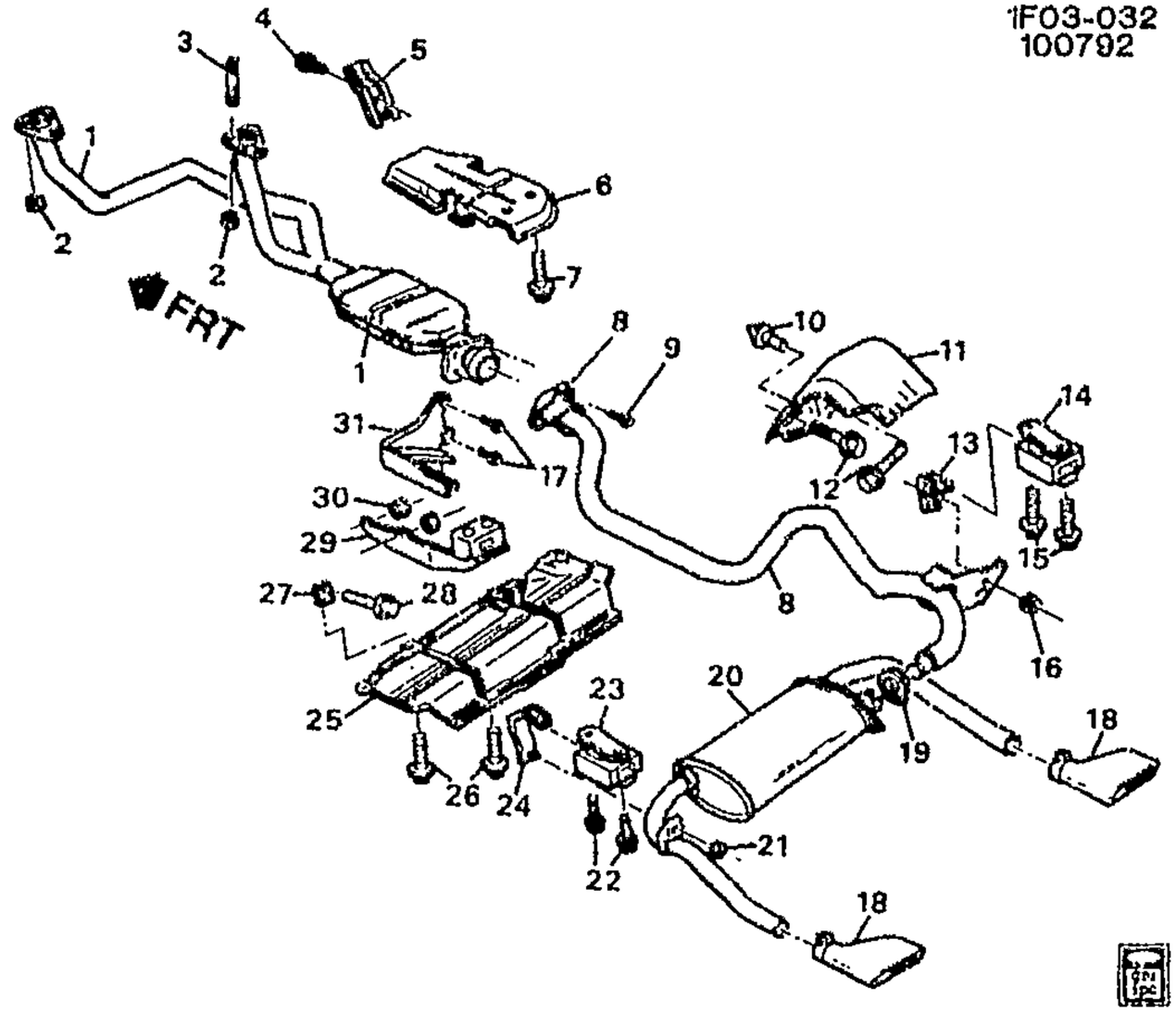

1F03-032

1993–1994 F EXHAUST SYSTEM–V8 (LT1/5.7P)
1995 F EXHAUST SYSTEM–V8 (LT1/5.7P)(NA5)

1.	4–D4	3.685	CONVERTER, 3WAY CTLTC (W/EXH MANIF PIPE)	93	F (LT1)	1	10230431
	4–C9	3.609	CONVERTER, 3WAY CTLTC (W/EXH MANIF PIPE) (3.685)	93	F (LT1)	1	10230431
	4–D4	3.685	CONVERTER, 3WAY CTLTC (W/EXH MANIF PIPE)	94	F (LT1) (EXC NM8)	1	10230431
	4–C9	3.609	CONVERTER, 3WAY CTLTC (W/EXH MANIF PIPE) (3.685)	94	F (LT1) (EXC NM8)	1	10230431
	4–D4	3.685	CONVERTER, 3WAY CTLTC (W/EXH MANIF PIPE)	94–95	F (LT1, NM8)	1	10239643
	4–C9	3.609	CONVERTER, 3WAY CTLTC (W/EXH MANIF PIPE) (3.685)	94–95	F (LT1, NM8)	1	10239643
	4–D4	3.685	CONVERTER, 3WAY CTLTC (W/EXH MANIF PIPE)	95	F (LT1, NA5) (EXC NM8)	1	10230431
	4–C9	3.609	CONVERTER, 3WAY CTLTC (W/EXH MANIF PIPE) (3.685)	95	F (LT1, NA5) (EXC NM8)	1	10230431
2.	4–C11	3.613	NUT, EXH C/OVR PIPE (M10X1.5) (HEX PRVL TORQ) (8.917)	93–95	F (LT1)	6	11516072
3.	4–C11	3.613	STUD, EXH PIPE	93–95	F (LT1)	6	10220453
4.		8.977	SCREW, M4.2–1.41X10 HEX LG WA HD W/SLR (EXH H/SHLD)	93–95		1	11515959
5.	4–C8	3.602	SHIELD, EXH HT	93–95	F	1	10198394
6.	4–D6	3.690	SHIELD, CTLTC CONV HT	93–95	F	1	10281066
7.		8.977	SCREW, M4.2–1.41X10 HEX LG WA HD W/SLR (CTLTC CONV H/SHLD)	93–95	F	5	11515959
8.	4–C9	3.609	PIPE, EXH	93–94	F (LT1) (EXC UO6)	1	10279022

cardiagn.com

	4–C9	3.609	PIPE, EXH	95	F (LT1, NA5, NF2) (EXC UD6)	1	10279022
	4–C9	3.609	PIPE, EXH	93–94	F (LT1, UD6) (EXPORT)	1	10246923
9.		8.900	BOLT, HEX W/CON WA 28OD, M10X1.5X87.5 THD 38, PC9.8 (EXH PIPE) (7.014)	93–95	F	2	1636152
10.	4–C11	3.616	BUMPER, EXH H/SHLD (PART OF 11) (16.650)	93–95	F	1	14005557
11.	4–C11	3.616	SHIELD, EXH PIPE HT (INCLS 10)	93–95	F	1	10223797
12.		8.977	SCREW, M4.2–1.41X10 HEX LG WA HD W/SLR (EXH PIPE H/SHLD)	93–95	F	3	11515959
13.	4–C11	3.616	BRACKET, EXH PIPE HNGR	93–95	F	1	10272958
14.	4–D9	3.706	HANGER, EXH TAIL PIPE INTER	93–95	F	1	10275709
15.		8.977	SCREW, HEX M8X2.12X30 W/FL WA POR (EXH MUFF INTER HNGR BRKT)	93–95	F	2	11304765
16.		8.917	NUT, M8X1.25X7.1, ZC 10 (EXH PIPE HNGR)	93–95	F	1	11515748
		8.929	WASHER, M8X24X2.3 (EXH PIPE HNGR)	93–95	F	1	11500323
17.		8.900	BOLT (CTLTC CONV HNGR)	93–95	F	2	11504596
18.	4–D9	3.705	EXTENSION, EXH TAIL PIPE	93–95	F (LT1) (EXC UD6)	2	10164146
19.	4–D10	3.708	CLAMP, EXH PIPE (I PIPE TO MUFFLER) (PART OF 20) (CLA 88896416)	93–95	F (LT1)	1	10198342
20.	4–D7	3.701	MUFFLER, EXH (W/TAIL PIPE) (DUAL) (INCLS 19)	93–95	F (LT1) (EXC UD6)	1	10289836
	4–D7	3.701	MUFFLER, EXH (W/TAIL PIPE) (DUAL) (INCLS 19)	93–94	F (LT1, UD6) (EXPORT)	1	10231688
21.		8.917	NUT, M8X1.25X7.1, ZC 10 (EXH MUFF HNGR)	93–95	F	1	11515748
		8.929	WASHER, M8X24X2.3 (EXH MUFF HNGR)	93–95	F	1	11500323
22.		8.977	SCREW, HEX M8X2.12X30 W/FL WA POR (EXH MUFF HNGR BRKT)	93–95	F	2	11504765
23.	4–D8	3.704	HANGER, EXH MUFF (3.706)	93–95	F (LT1)	1	10275709
24.	4–D8	3.704	HANGER, EXH MUFF	93–95	F (LT1)	1	10288522
25.	4–D9	3.705	SHIELD, EXH MUFF HT	93–95	F	1	10239715
26.		8.977	SCREW, M4.2–1.41X10 HEX LG WA HD W/SLR (EXH MUFF H/SHLD)	93–95	F	6	11515959
27.	4–C8	3.602	BRACKET, EXH MUFF H/SHLD (3.704)	93–95	F	1	14047921
28.		8.977	SCREW, M4.2–1.41X10 HEX LG WA HD W/SLR (EXH MUFF H/SHLD BRKT)	93–95	F	1	11515959
29.	4–D6	3.690	BRACKET, CTLTC CONV HNGR	93	F (LT1, MD8)	1	10262320
	4–D6	3.690	BRACKET, CTLTC CONV HNGR	93	F (LT1, M28, M29)	1	10284835
	4–D6	3.690	BRACKET, CTLTC CONV HNGR	94–95	F (LT1, M30)	1	10262320
	4–D6	3.690	BRACKET, CTLTC CONV HNGR	94–95	F (LT1, MM6)	1	10284835
30.	4–N25	7.580	NUT, R/AXL TORQ ARM BRKT (M10X1.5 FLANGED HEX HEAD) (8.917)	93–95	F	2	10255857

cardiagn.com

							TF03-032
31.	4-D6	3.690	HANGER, CTLTC CONV	93-94	F (LT1)	1	10263252
	4-D6	3.690	HANGER, CTLTC CONV	95	F (LT1, NA5, NF2)	1	10263252

RPO DEFINITIONS

LT1 – ENGINE-GAS, 8 CYL, 5.7L(5.7P),MFI,HO
MD8 – TRANSMISSION,AUTOMATIC 4-SPEED(THM700R4/4L60)
MM6 – TRANSMISSION MAN 6 SPD, BORG WARNER, 85MM, 1ST 2.66, 6TH 0.50, O/D
M28 – TRANSMISSION MAN, 6 SPD, BORG WARNER, 85MM, 3.36 1ST, 1.35 3RD
M29 – TRANSMISSION MAN, 6 SPD, BORG WARNER, 85MM, 2.97 1ST, 1.44 3RD
M30 – TRANSMISSION,AUTOMATIC 4 SPEED,4L60E,ELECTRONIC
NA5 – EMISSION SYSTEM,FEDERAL REQUIREMENTS
NF2 – EMISSION SYSTEM,FEDERAL,TIER 1
NM8 – EMISSION SYSTEM,LEADED FUEL(EXPORT)
UD6 – ALARM,EXHAUST TEMPERATURE(EXPORT)

cardiagn.com

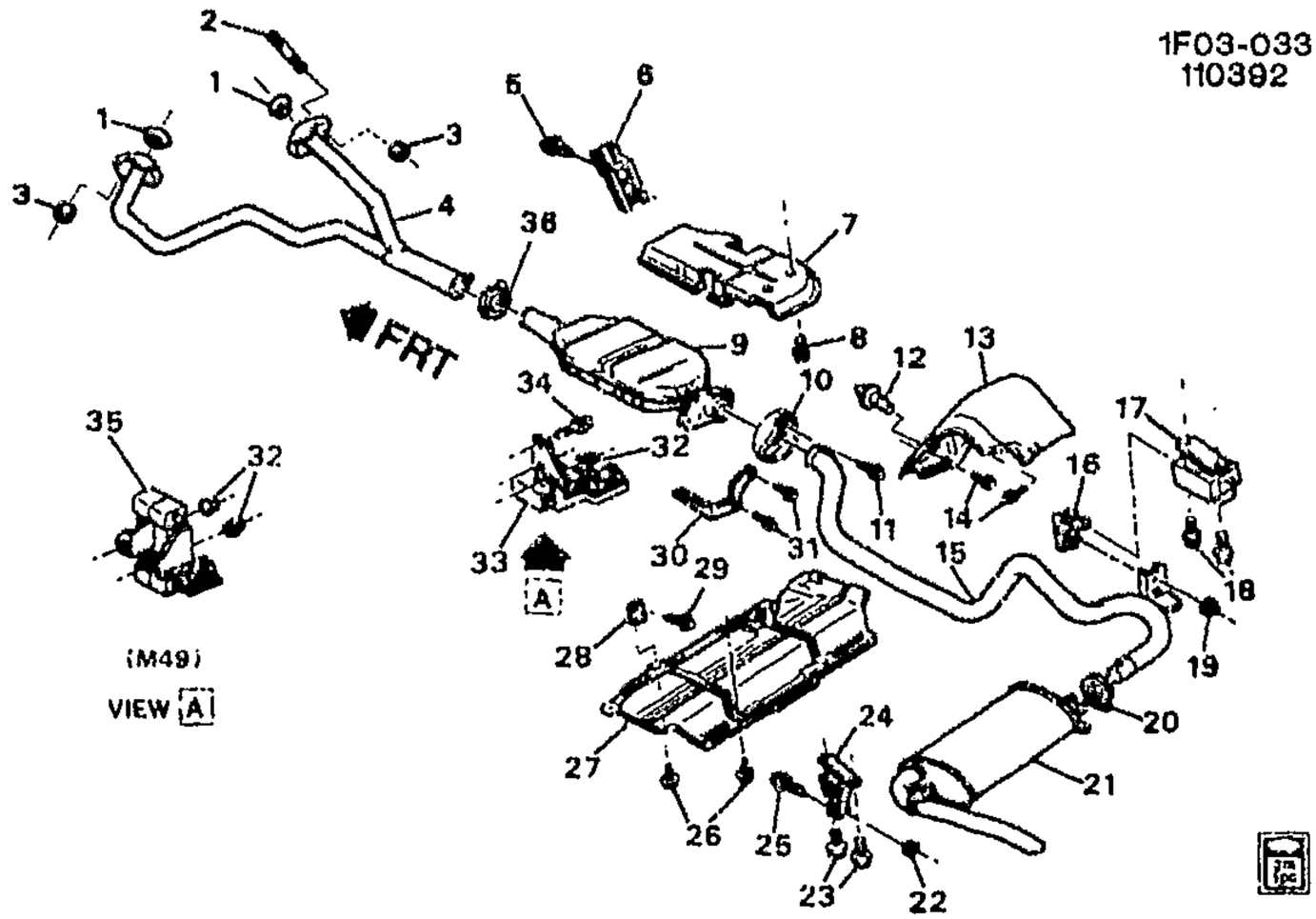

1F03–033

1993–1995 F EXHAUST SYSTEM–V6 (L32/3.4S)

1.	4–C10	3.611	SEAL, EXH C/OVR PIPE	93–95	F (L32)	2	10220451
2.	4–C11	3.613	STUD, EXH PIPE	93–95	F (L32)	4	10220453
3.	4–C11	3.613	NUT, EXH C/OVR PIPE (M10X1.5) (HEX PRVL TORQ) (8.917)	93–95	F (L32)	4	11516072
4.	4–C9	3.609	PIPE, EXH C/OVR	93–95	F (L32)	1	10247840
5.		8.977	SCREW, M4.2–1.41X10 HEX LG WA HD W/SLR (EXH H/SHLD)	93–95		1	11515959
6.	4–C8	3.602	SHIELD, EXH HT	93–95	F	1	10198394
7.	4–D6	3.690	SHIELD, CTLTC CONV HT	93–95	F	1	10281066
8.		8.977	SCREW, M4.2–1.41X10 HEX LG WA HD W/SLR (CTLTC CONV H/SHLD)	93–95		5	11515959
9.	4–D4	3.685	CONVERTER, 3WAY CTLTC (INCLS 36)	93–95	F (L32)	1	25146927
10.		N.S.	FLANGE, EXH PIPE (PART OF 15)	93–95	F		
11.		8.900	BOLT, HEX W/CON WA 28OD, M10X1.5X87.5 THD 38, PC9.8 (EXH PIPE) (7.014)	93–95	F	2	1636152
12.	4–C11	3.616	BUMPER, EXH H/SHLD (PART OF 13) (16.650)	93–95	F	1	14005567
13.	4–C11	3.616	SHIELD, EXH PIPE HT (INCLS 12)	93–95	F	1	10223797
14.		8.977	SCREW, M4.2–1.41X10 HEX LG WA HD W/SLR (EXH PIPE H/SHLD)	93–95	F	3	11515959
15.	4–C9	3.609	PIPE, EXH (W/SHLD & CLMP NEAR CONV) (INCLS 10)	93–95	F (L32) (EXC UD6)	1	10279020
	4–C9	3.609	PIPE, EXH (INCLS 10) (W/SHIELD)	93–95	F (L32, UD6) (EXPORT)	1	10246924
16.	4–C11	3.616	BRACKET, EXH PIPE HNGR	93–95	F	1	10272958

cardiagn.com

							1F03-033
17.	4-D9	3.706	HANGER, EXH TAIL PIPE INTER .	93-95	F	1	10275709
18.		8.977	SCREW, HEX M8X2.12X30 W/FL WA POR (EXH MUFF INTER HNGR BRKT)	93-95	F	2	11504765
19.		8.917	NUT, M8X1.25X7.1, ZC 10 (EXH PIPE HNGR)	93-94	F	1	11515748
		8.929	WASHER, M8X24X2.3 (EXH PIPE HNGR)	93-94	F	1	11500323
		8.917	NUT, HFH, M8X1.25X8.8, 17.9 OD, 10 DIN, PREV TORQUE (EXH PIPE HNGR)	95	F	1	11517031
20.	4-D10	3.708	CLAMP, EXH PIPE (I PIPE TO MUFFLER) (PART OF 21) (CLA 88896415)	93-95	F (L32)	1	10198343
21.	4-D7	3.701	MUFFLER, EXH (W/TAIL PIPE) (INCLS 20)	93-95	F (L32)	1	10289838
	4-D9	3.705	MUFFLER, EXH (W/TAIL PIPE) (INCLS 20) (3.701)	93-95	F (L32)	1	10289838
	4-D7	3.701	MUFFLER, EXH (W/TAIL PIPE) (INCLS 20)	93-95	F (L32, VP6) (EXPORT)	1	10294291
	4-D9	3.705	MUFFLER, EXH (W/TAIL PIPE) (INCLS 20) (3.701)	93-95	F (L32, VP6) (EXPORT)	1	10294291
22.		8.921	NUT, METRIC PUSH-ON BOLT RETAINING SPRING (EXH TAIL PIPE HNGR BOLT) (PART OF 24)	93-95	F	1	10009923
23.		8.977	SCREW, HEX M8X2.12X30 W/FL WA POR (EXH MUFF HNGR BRKT)	93-95	F	2	11504765
24.	4-D8	3.704	HANGER, EXH MUFF (INCLS 22, 25)	93-95	F (L32)	LH	10272096
25.		8.900	SCREW, M8X1.25X56.50, TAPPING, CAPTIVE PT (EXH TAIL PIPE HNGR) (PART OF 24) (3.704)	93-95	F	1	10095393
26.		8.977	SCREW, M4.2-1.41X10 HEX LG WA HD W/SLR (EXH MUFF H/SHLD)	93-95	F	6	11515959
27.	4-D9	3.705	SHIELD, EXH MUFF HT	93-95	F	1	10239715
28.	4-C8	3.602	BRACKET, EXH MUFF H/SHLD (3.704)	93-95	F	1	14047921
29.		8.977	SCREW, M4.2-1.41X10 HEX LG WA HD W/SLR (EXH MUFF H/SHLD BRKT)	93-95	F	1	11515959
30.	4-D6	3.690	HANGER, CTLTC CONV	93-95	F (L32)	1	10267393
31.		8.900	BOLT (CTLTC CONV HNGR)	93-95	F	2	11504596
32.	4-N25	7.580	NUT, R/AXL TORQ ARM BRKT (M10X1.5 FLANGED HEX HEAD) (8.917)	93-95	F	2	10255857
33.	4-D6	3.690	BRACKET, CTLTC CONV FRT HNGR (L32/MD8 STAMPED IN PART)	93	F (L32, MD8)	1	10224680
	4-D6	3.690	BRACKET, CTLTC CONV FRT HNGR	94-95	F (L32, M30)	1	10224680
34.	4-N23	5.380	BOLT, R/AXL TORQ ARM INR BRKT (M10X1.5X130) (M10X1.5X130) (8.900)	93-95	F (MD8)	1	11508489

cardiagn.com

							1F03–033
35.	4–D6	3.690	**BRACKET**, CTLTC CONV HNGR .	93–95	F (L32, M49)	1	10222075
36.	4–D10	3.708	**CLAMP**, EXH PIPE (X–OVER TO CONVERTER) (PART OF 9) (CLA 88896415)	93–95	F (L32)	1	10198342

RPO DEFINITIONS

L32 – ENGINE,3.4L,V6,(3.4S),SFI,OHV
MD8 – TRANSMISSION,AUTOMATIC 4–SPEED(THM700R4/4L60)
M30 – TRANSMISSION,AUTOMATIC 4 SPEED,4L60E,ELECTRONIC
M49 – TRANSMISSION MAN 5 SPD, BORG WARNER, 77MM, 3.75 1ST, .76 5TH, O/D
UD6 – ALARM,EXHAUST TEMPERATURE(EXPORT)
VP6 – NOISE LEVEL CONTROL

cardiagn.com

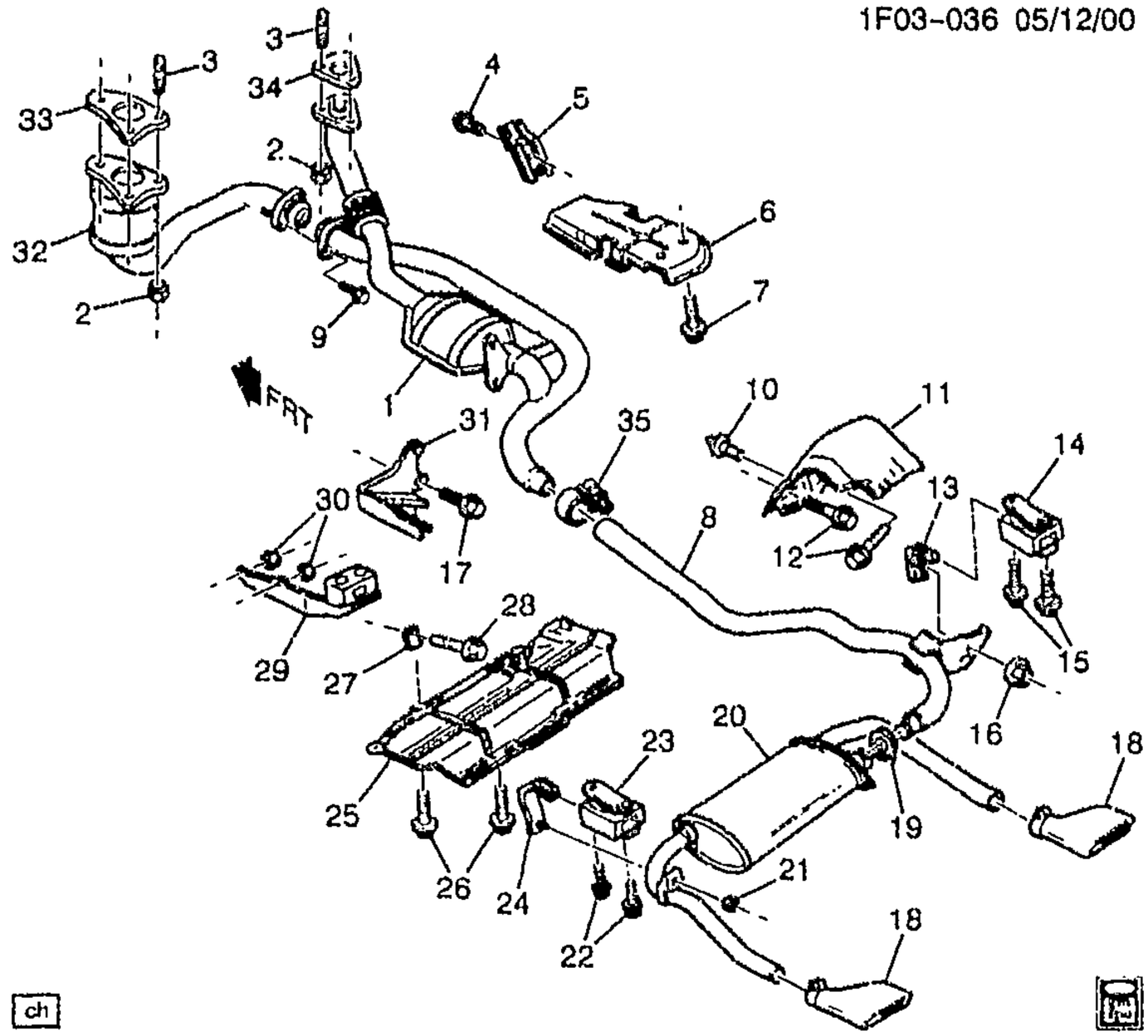

1F03-036

1995 F EXHAUST SYSTEM -V8 (LT1/5.7P)(NB6)
1995-1997 F EXHAUST SYSTEM-V8 (LT1/5.7P)

1.	4-C9	3.609	CONVERTER, OXIDN CTLTC (W/EXH PIPE) (3.685)	95	F (LT1, M30, NB6)	RH	12555496
	4-C9	3.609	CONVERTER, OXIDN CTLTC (W/EXH PIPE) (3.685)	96	F (LT1) (EXC NM8, UD6)	RH	12560407
	4-C9	3.609	CONVERTER, OXIDN CTLTC (W/EXH PIPE) (3.685)	96-97	F (LT1, NM8)	RH	12560408
	4-C9	3.609	CONVERTER, OXIDN CTLTC (W/EXH PIPE) (3.685)	97	F (LT1) (EXC NM8)	RH	12560407
	4-C9	3.609	CONVERTER, OXIDN CTLTC (W/EXH PIPE) (3.685)	96	F (LT1, UD6) (EXPORT)	RH	12555502
2.	4-C11	3.613	NUT, EXH C/OVR PIPE (M10X1.5) (HEX PRVL TORQ) (8.917)	95	F (LT1)	6	11516072
	4-C11	3.613	NUT, EXH MANIF PIPE (M10X1.5 FLANGED HEX HEAD) (8.917) ...	96-97	F	6	10255857
3.	4-C11	3.613	STUD, EXH PIPE	95-97	F (LT1)	6	10220453
4.		8.977	SCREW, M4.2-1.41X10 HEX LG WA HD W/SLR (EXH H/SHLD) ...	95-97	C	1	11515959
5.	4-C8	3.602	SHIELD, EXH HT	95-97	F	1	10198394
6.	4-D6	3.690	SHIELD, CTLTC CONV HT	95-96	F	1	10281066
	4-D6	3.690	SHIELD, CTLTC CONV HT	97	F	1	10417743
7.		8.977	SCREW, M4.2-1.41X10 HEX LG WA HD W/SLR (CTLTC CONV H/SHLD)	95-97	F	5	11515959

cardiagn.com

	4-C9	3.609	PIPE, EXH (INCLS CLAMP THAT CONNECTS PIPE TO CNVRTR PIPE)	96-97	F (LT1)	1	10279024
	4-C9	3.609	PIPE, EXH	95	F (LT1, UD6) (EXPORT)	1	10246923
9.		8.900	BOLT, HFT, 10X1.5X50 W/8 OD X 5 LG DOG PT, 21.5 OD, 9.8, PO 6174M (CTLTC CONV) (3.023)	95-97	F	2	25537061
10.	4-C11	3.616	BUMPER, EXH H/SHLD (PART OF 11) (16.650)	95-97	F	1	14005567
11.	4-C11	3.616	SHIELD, EXH PIPE HT (INCLS 10)	95-97	F	1	10223797
12.		8.977	SCREW, M4.2-1.41X10 HEX LG WA HD W/SLR (EXH PIPE H/SHLD)	95-97	F	3	11515959
13.	4-C11	3.616	BRACKET, EXH PIPE HNGR	95-97	F	1	10272958
14.	4-D9	3.706	HANGER, EXH TAIL PIPE INTER	95-97	F	1	10275709
15.		8.977	SCREW, HEX M8X2.12X30 W/FL WA POR (EXH MUFF INTER HNGR BRKT)	95-97	F	2	11504765
16.		8.917	NUT, M8X1.25X7.1, ZC 10 (EXH PIPE HNGR)	95-97	F	1	11515748
		8.929	WASHER, M8X24X2.3 (EXH PIPE HNGR)	95-97	F	1	11500323
17.		8.900	BOLT (CTLTC CONV HNGR)	95-97	F	2	11504596
18.	4-D9	3.705	EXTENSION, EXH TAIL PIPE	95-96	F (LT1) (EXC UD6)	2	10164146
	4-D9	3.705	EXTENSION, EXH TAIL PIPE	97	F (LT1) (EXC VP6)	2	10164146
19.	4-D10	3.708	CLAMP, EXH PIPE (INTER PIPE TO MUFFLER) (PART OF 20) (CLA 88896416)	95-97	F (LT1)	1	10198342
20.	4-D7	3.701	MUFFLER, EXH (W/TAIL PIPE) (DUAL) (INCLS 19)	95-96	F (LT1) (EXC UD6)	1	10289836
	4-D7	3.701	MUFFLER, EXH (W/TAIL PIPE) (DUAL) (INCLS 19)	97	F (LT1) (EXC VP6)	1	10289836
	4-D7	3.701	MUFFLER, EXH (W/TAIL PIPE) (DUAL) (INCLS 19)	95	F (LT1, UD6) (EXPORT)	1	10231688
	4-D7	3.701	MUFFLER, EXH (W/TAIL PIPE) (DUAL) (INCLS 19)	96	F (LT1, UD6) (EXPORT)	1	10294797
	4-D7	3.701	MUFFLER, EXH (W/TAIL PIPE) (DUAL) (INCLS 19)	97	F (LT1, VP6) (EXPORT)	1	10294797
21.		8.917	NUT, M8X1.25X7.1, ZC 10 (EXH MUFF HNGR)	95-97	F	1	11515748
		8.929	WASHER, M8X24X2.3 (EXH MUFF HNGR)	95-97	F	1	11500323
22.		8.977	SCREW, HEX M8X2.12X30 W/FL WA POR (EXH MUFF HNGR BRKT)	95-97	F	2	11504765
23.	4-D8	3.704	HANGER, EXH MUFF (3.706)	95-97	F (LT1)	1	10275709
24.	4-D8	3.704	HANGER, EXH MUFF	95-97	F (LT1)	1	10288522
25.	4-D9	3.705	SHIELD, EXH MUFF HT	95-97	F	1	10239715
26.		8.977	SCREW, M4.2-1.41X10 HEX LG WA HD W/SLR (EXH MUFF H/SHLD)	95-97	F	6	11515959
27.	4-C8	3.602	BRACKET, EXH MUFF H/SHLD (3.704)	95-97	F	1	14047921
28.		8.977	SCREW, M4.2-1.41X10 HEX LG WA HD W/SLR (EXH MUFF H/SHLD BRKT)	95-97	F	1	11515959

cardiagn.com

29.	4-D6	3.690	BRACKET, CTLTC CONV HNGR	95-97	F (LT1, M30)	1	10262320
	4-D6	3.690	BRACKET, CTLTC CONV HNGR	95-97	F (LT1, MM6)	1	10284835
30.	4-N25	7.580	NUT, R/AXL TORQ ARM BRKT (M10X1.5 FLANGED HEX HEAD) (8.917)	95-97	F	2	10255857
31.	4-D6	3.690	HANGER, CTLTC CONV	95	F (LT1, NB6)	1	10263253
	4-D6	3.690	HANGER, CTLTC CONV	96-97	F (LT1)	1	10262319
32.	4-D4	3.685	CONVERTER, OXIDN CTLTC (W/EXH PIPE)	95	F (LT1, M30, NB6)	LH	12553506
	4-C9	3.609	CONVERTER, OXIDN CTLTC (W/EXH PIPE) (3.685)	95	F (LT1, M30, NB6)	LH	12553506
	4-D4	3.685	CONVERTER, OXIDN CTLTC (W/EXH PIPE)	96	F (LT1) (EXC NM8, UD6)	LH	12551249
	4-C9	3.609	CONVERTER, OXIDN CTLTC (W/EXH PIPE) (3.685)	96	F (LT1) (EXC NM8, UD6)	LH	12551249
	4-D4	3.685	CONVERTER, OXIDN CTLTC (W/EXH PIPE)	96-97	F (LT1, NM8)	LH	12554299
	4-C9	3.609	CONVERTER, OXIDN CTLTC (W/EXH PIPE) (3.685)	96-97	F (LT1, NM8)	LH	12554299
	4-D4	3.685	CONVERTER, OXIDN CTLTC (W/EXH PIPE)	97	F (LT1) (EXC NM8)	LH	12551249
	4-C9	3.609	CONVERTER, OXIDN CTLTC (W/EXH PIPE) (3.685)	97	F (LT1) (EXC NM8)	LH	12551249
	4-D4	3.685	CONVERTER, OXIDN CTLTC (W/EXH PIPE)	96	F (LT1, UD6) (EXPORT)	LH	12551251
	4-C9	3.609	CONVERTER, OXIDN CTLTC (W/EXH PIPE) (3.685)	96	F (LT1, UD6) (EXPORT)	LH	12551251
33.	4-C10	3.611	GASKET, EXH MANIF PIPE	95	F (LT1, M30, NB6)	LH	12550283
	4-C10	3.611	GASKET, EXH MANIF PIPE	96-97	F (LT1)	LH	12550283
	4-C10	3.611	GASKET, EXH MANIF PIPE	95	F (LT1, UD6) (EXPORT)	LH	12550283
34.	4-C10	3.611	GASKET, EXH MANIF PIPE (EXH C/OVR PIPE)	95	F (LT1, M30, NB6)	RH	88891747
	4-C10	3.611	GASKET, EXH MANIF PIPE (EXH C/OVR PIPE)	96-97	F (LT1)	RH	88891747
35.		N.S.	CLAMP, EXH PIPE (PART OF 8) (CLA 38896416)				

RPO DEFINITIONS

LT1 – ENGINE–GAS, 8 CYL, 5.7L(5.7P),MFI,HO
MM6 – TRANSMISSION MAN 6 SPD, BORG WARNER, 85MM, 1ST 2.66, 6TH 0.50, O/D
M30 – TRANSMISSION,AUTOMATIC 4 SPEED,4L60E,ELECTRONIC
NB6 – EMISSION SYSTEM CALIFORNIA,TIER 1
NM8 – EMISSION SYSTEM,LEADED FUEL(EXPORT)
UD6 – ALARM,EXHAUST TEMPERATURE(EXPORT)
VP6 – NOISE LEVEL CONTROL

cardiagn.com

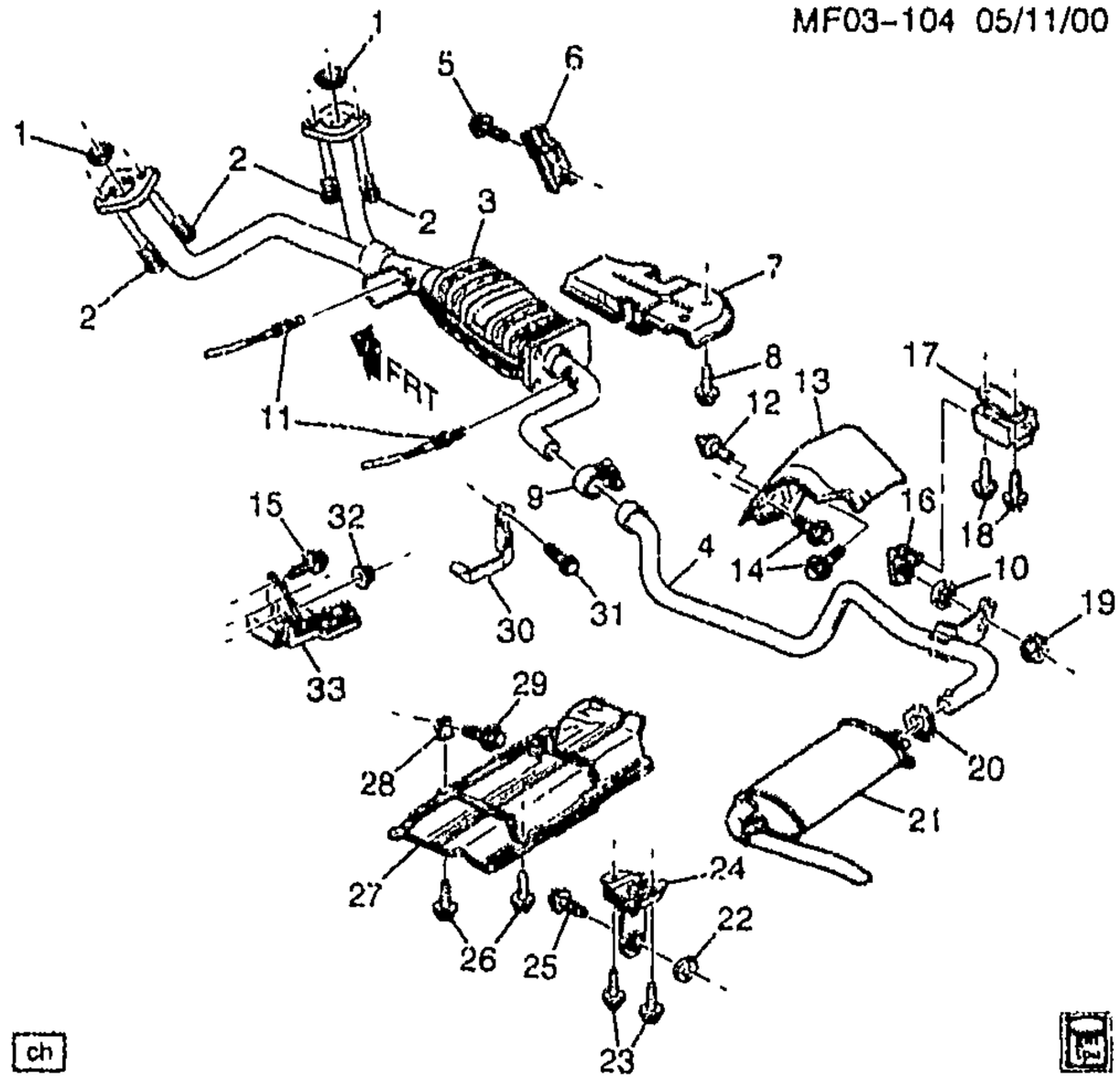

1995-1997 F EXHAUST SYSTEM-V6 (L36/3.8K)(SINGLE

1.	4-C10	3.611	SEAL, EXH MANIF PIPE	95-97	F (L36)	2	24505017
2.	4-C11	3.613	BOLT, EXH MANIF PIPE	95-97	F (L36)	4	24503965
3.	4-D4	3.685	CONVERTER, 3WAY CTLTC (W/EXH MANIF PIPE)	95	F (L36)	1	24505458
	4-C9	3.609	CONVERTER, 3WAY CTLTC (W/EXH MANIF PIPE) (3.685)	95	F (L36)	1	24505458
	4-D4	3.685	CONVERTER, 3WAY CTLTC (W/EXH MANIF PIPE)	96-97	F (L36) (EXC UD6)	1	24505458
	4-C9	3.609	CONVERTER, 3WAY CTLTC (W/EXH MANIF PIPE) (3.685)	96-97	F (L36) (EXC UD6)	1	24505458
	4-D4	3.685	CONVERTER, 3WAY CTLTC (W/EXH MANIF PIPE)	96-97	F (L36, UD6) (EXPORT)	1	24505226
	4-C9	3.609	CONVERTER, 3WAY CTLTC (W/EXH MANIF PIPE) (3.685)	96-97	F (L36, UD6) (EXPORT)	1	24505226
4.	4-C9	3.609	PIPE, EXH (INCLS 9)	95-97	F (L36)	1	10281081
5.		8.977	SCREW, M4.2-1.41X10 HEX LG WA HD W/SLR (EXH H/SHLD) ...	95-97	F	1	11515959
6.	4-C8	3.602	SHIELD, EXH HT	95-97	F	1	10198394
7.	4-D6	3.690	SHIELD, CTLTC CONV HT	95-96	F	1	10281066
	4-D6	3.690	SHIELD, CTLTC CONV HT	97	F	1	10417743
8.		8.977	SCREW, M4.2-1.41X10 HEX LG WA HD W/SLR (CTLTC CONV H/SHLD)	95-97	F	5	11515959
9.		N.S.	CLAMP, EXH PIPE (PART OF 4) (CLA 88896415)		.....		
10.	4-D8	3.704	DAMPENER, EXH MUFF VIB	95-97	F (L36)	1	10261947

cardiagn.com

11.	4-C26	3.682	SENSOR, HTD OXY (POSN 2) (PRE CONVERTER) (CATALYST MON) (AC-DELCO #AFS90)	95	F (L36)	1	25312188
	4-C26	3.682	SENSOR, HTD OXY (POSN 2) (PRE CONVERTER) (CATALYST MON) (AC-DELCO #AFS97)	96-97	F (L36)	1	25312196
	4-C26	3.682	SENSOR, HTD OXY (POSN 3) (POST CONVERTER) (CATALYST MON) (AC-DELCO #AFS90)	95	F (L36)	1	25312188
	4-C26	3.682	SENSOR, HTD OXY (POSN 3) (POST CONVERTER) (CATALYST MON) (AC-DELCO #AFS97)	96-97	F (L36)	1	25312196
12.	4-C11	3.616	BUMPER, EXH H/SHLD (PART OF 13) (16.650)	95-97	F	1	14005567
13.	4-C11	3.616	SHIELD, EXH PIPE HT (INCLS 12)	95-97	F	1	10223797
14.		8.977	SCREW, M4.2-1.41X10 HEX LG WA HD W/SLR (EXH PIPE H/SHLD)	95-97	F	3	11515959
15.		8.900	BOLT, HFH M10X1.5X130 9.8 PZOR (M10X1.5X130)	95-97	F	1	11508489
16.	4-C11	3.616	BRACKET, EXH PIPE HNGR	95-97	F	1	10272958
17.	4-D9	3.706	HANGER, EXH TAIL PIPE INTER .	95-97	F	1	10275709
18.		8.977	SCREW, HEX M8X2.12X30 W/FL WA POR (EXH MUFF INTER HNGR BRKT)	95-97	F	2	11504765
19.		8.917	NUT, HFH, M8X1.25X8.8, 17.9 OD, 10 DIN, PREV TORQUE (EXH PIPE HNGR)	95-97	.....	1	11517031
		8.929	WASHER, M8X24X2.3 (EXH PIPE HNGR)	95-97	F	1	11500323
20.	4-D10	3.708	CLAMP, EXH PIPE (PART OF 21) (CLA 88896415)	96-97	F (L36)	AR	10198343
	4-D10	3.708	CLAMP, EXH PIPE (2.25D TORCA#S-22ACS, I-PIPE/MUFF) (PART OF 21) (CLA 88896415)	95	F (L36)	AR	10198343
21.	4-D7	3.701	MUFFLER, EXH (W/TAIL PIPE) (SINGLE) (INCLS 20)	95	F (L36)	1	10289838
	4-D9	3.705	MUFFLER, EXH (W/TAIL PIPE) (SINGLE) (INCLS 20) (3.701)	95	F (L36)	1	10289838
	4-D7	3.701	MUFFLER, EXH (W/TAIL PIPE) (SINGLE) (INCLS 20)	96-97	F (L36) (EXC VP6, Y87)	1	10289838
	4-D9	3.705	MUFFLER, EXH (W/TAIL PIPE) (SINGLE) (INCLS 20) (3.701)	96-97	F (L36) (EXC VP6, Y87)	1	10289838
22.		8.921	NUT, METRIC PUSH-ON BOLT RETAINING SPRING (EXH TAIL PIPE HNGR BOLT) (PART OF 24)	95-97	F	1	10009923
23.		8.977	SCREW, HEX M8X2.12X30 W/FL WA POR (EXH MUFF HNGR BRKT)	95-97	F	2	11504765
24.	4-D8	3.704	HANGER, EXH MUFF (INCLS 22, 25)	95	F (L36)	1	10272096
	4-D8	3.704	HANGER, EXH MUFF (INCLS 22, 25)	96	F (L36) (EXC Y87)	1	10272096
	4-D8	3.704	HANGER, EXH MUFF (INCLS 22, 25)	97	F (L36) (EXC VP6, Y87)	1	10272096

cardiagn.com

							MF03-104
25.		8.900	SCREW, M8X1.25X56.50, TAPPING, CAPTIVE PT (EXH TAIL PIPE HNGR) (PART OF 24) (3.704)	95-97	F	1	10095393
26.		8.977	SCREW, M4.2-1.41X10 HEX LG WA HD W/SLR (EXH MUFF H/SHLD)	05-97	F	6	11515959
27.	4-D9	3.705	SHIELD, EXH MUFF HT	95-97	F	1	10239715
28.	4-C5	3.602	BRACKET, EXH MUFF H/SHLD (3.704)	95-97	F	1	14047921
29.		9.977	SCREW, M4.2-1.41X10 HEX LG WA HD W/SLR (EXH MUFF H/SHLD BRKT)	95-97	F	1	11515959
30.	4-D6	3.690	HANGER, CTLTC CONV	95-97	F (L36)	1	10289505
31.		8.900	BOLT (CTLTC CONV HNGR)	95-97	F	2	11504596
32.		8.915	NUT, HFH, 10X1.5 6H THD, 21.3 OD, 9.8 THK 13 HEX DR, GRD 9, ZF (R/AXL TORQ ARM BRKT) (8.917)	95-97	F	2	10255857
33.	4-D6	3.690	BRACKET, CTLTC CONV FRT HNGR	95-97	F (L36, M30)	1	10279303
	4-D6	3.690	BRACKET, CTLTC CONV FRT HNGR	96-97	F (L36, M49)	1	10281475

RPO DEFINITIONS

L36 – ENGINE GAS, 6 CYL, 3.8K, MFI, V6, HO (ERV6 SERIES)
M30 – TRANSMISSION,AUTOMATIC 4 SPEED,4L60E,ELECTRONIC
M49 – TRANSMISSION MAN 5 SPD, BORG WARNER, 77MM, 3.75 1ST, .76 5TH, O/D
UD6 – ALARM,EXHAUST TEMPERATURE(EXPORT)
VP6 – NOISE LEVEL CONTROL
Y87 – PERFORMANCE ENHANCEMENT 3800 GT

cardiagn.com

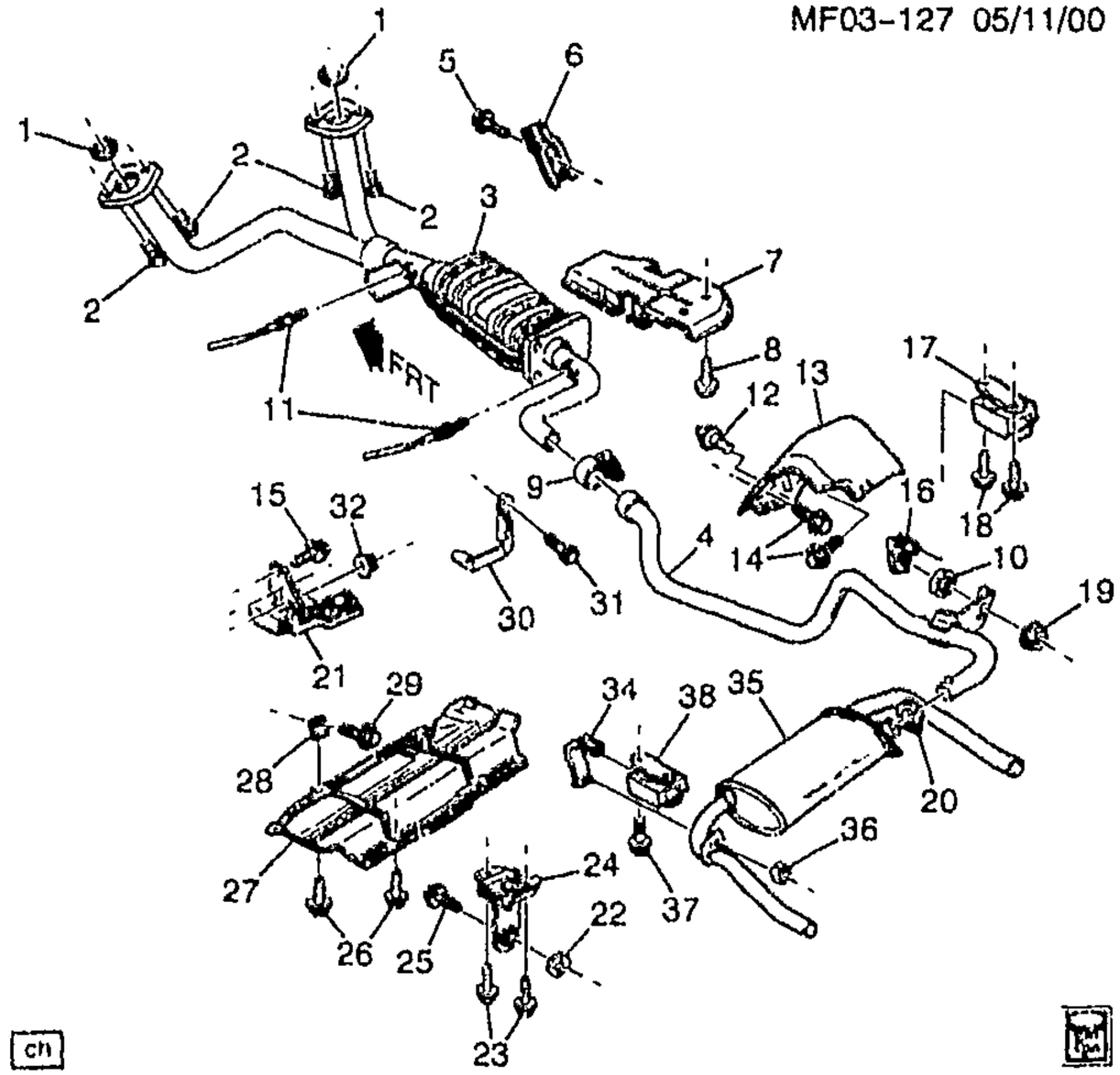

1996-1997 F EXHAUST SYSTEM-V6 (L36/3.8K)(DUAL

1.	4-C10	3.611	SEAL, EXH MANIF PIPE	96-97	F (L36)	2	24505017
2.	4-C11	3.613	BOLT, EXH MANIF PIPE	96-97	F (L36)	4	24503965
3.	4-D4	3.685	CONVERTER, 3WAY CTLTC (W/EXH MANIF PIPE)	96-97	F (L36) (EXC UD6)	1	24505458
	4-C9	3.609	CONVERTER, 3WAY CTLTC (W/EXH MANIF PIPE) (3.685)	96-97	F (L36) (EXC UD6) ...	1	24505458
	4-D4	3.685	CONVERTER, 3WAY CTLTC (W/EXH MANIF PIPE)	96-97	F (L36, UD6) (EXPORT)	1	24505226
	4-C9	3.609	CONVERTER, 3WAY CTLTC (W/EXH MANIF PIPE) (3.685)	96-97	F (L36, UD6) (EXPORT)	1	24505226
4.	4-C9	3.609	PIPE, EXH (INCLS 9)	96-97	F (L36)	1	10281081
5.		8.977	SCREW, M4.2-1.41X10 HEX LG WA HD W/SLR (EXH H/SHLD) ...	96-97	F	1	11515959
6.	4-C8	3.602	SHIELD, EXH HT	96-97	F	1	10198394
7.	4-D6	3.690	SHIELD, CTLTC CONV HT	96	F	1	10281066
	4-D6	3.690	SHIELD, CTLTC CONV HT	97	F	1	10417743
8.		8.977	SCREW, M4.2-1.41X10 HEX LG WA HD W/SLR (CTLTC CONV H/SHLD)	96-97	F	5	11515959
9.		N.S.	CLAMP, EXH PIPE (PART OF 4) (CLA 88896415)		.....		
10.	4-D8	3.704	DAMPENER, EXH MUFF VIB (5.395)	96-97	F (L36)	1	10261947
11.	4-C26	3.682	SENSOR, HTD OXY (POSN 2) (PRE CONVERTER) (CATALYST MON) (AC-DELCO #AFS97)	96-97	F (L36)	1	25312196

cardiagn.com

	4-C26	3.682	SENSOR, HTD OXY (POSN 3) (POST CONVERTER) (CATALYST MON) (AC-DELCO #AFS97)	96-97	F (L36)	1	25312196
12.	4-C11	3.616	BUMPER, EXH H/SHLD (PART OF 13) (16.650)	96-97	F	1	14005567
13.	4-C11	3.616	SHIELD, EXH PIPE HT (INCLS 12)	96-97	F	1	10223797
14.		8.977	SCREW, M4.2-1.41X10 HEX LG WA HD W/SLR (EXH PIPE H/SHLD)	96-97	F	3	11515959
15.		8.900	BOLT, HFH M10X1.5X130 9.8 PZOR (M10X1.5X130)	96-97	F	1	11508489
16.	4-C11	3.616	BRACKET, EXH PIPE HNGR	96-97	F	1	10272958
17.	4-D9	3.706	HANGER, EXH TAIL PIPE INTER .	96-97	F	1	10275709
18.		8.977	SCREW, HEX M8X2.12X30 W/FL WA POR (EXH MUFF INTER HNGR BRKT)	96-97	F	2	11504765
19.		8.917	NUT, HFH, M8X1.25X8.8, 17.9 OD, 10 DIN, PREV TORQUE (EXH PIPE HNGR)	96-97	.....	1	11517031
		8.929	WASHER, M8X24X2.3 (EXH PIPE HNGR)	96-97	F	1	11500323
20.	4-D10	3.708	CLAMP, EXH PIPE (PART OF 21, 35) (CLA 88896415)	96-97	F (L36)	AR	10198343
21.	4-D6	3.690	BRACKET, CTLTC CONV FRT HNGR	96-97	F (L36, M30)	1	10279303
	4-D6	3.690	BRACKET, CTLTC CONV FRT HNGR	96-97	F (L36, M49)	1	10281475
22.		8.921	NUT, METRIC PUSH-ON BOLT RETAINING SPRING (EXH TAIL PIPE HNGR BOLT) (PART OF 24)	96-97	F	1	10009923
23.		8.977	SCREW, HEX M8X2.12X30 W/FL WA POR (EXH MUFF HNGR BRKT)	96-97	F	2	11504765
24.	4-D8	3.704	HANGER, EXH MUFF (INCLS 22, 25)	96	F (L36) (EXC Y87)	1	10272096
	4-D8	3.704	HANGER, EXH MUFF (INCLS 22, 25)	97	F (L36) (EXC VP6, Y87)	1	10272096
25.		8.900	SCREW, M8X1.25X56.50, TAPPING, CAPTIVE PT (EXH TAIL PIPE HNGR) (PART OF 24) (3.704)	96-97	F	1	10095393
26.		8.977	SCREW, M4.2-1.41X10 HEX LG WA HD W/SLR (EXH MUFF H/SHLD)	96-97	F	6	11515959
27.	4-D9	3.705	SHIELD, EXH MUFF HT	96-97	F	1	10239715
28.	4-C8	3.602	BRACKET, EXH MUFF H/SHLD (3.704)	96-97	F	1	14047921
29.		8.977	SCREW, M4.2-1.41X10 HEX LG WA HD W/SLR (EXH MUFF H/SHLD BRKT)	96-97	F	1	11515959
30.	4-D6	3.690	HANGER, CTLTC CONV	96-97	F (L36)	1	10289505
31.		8.900	BOLT (CTLTC CONV HNGR)	96-97	F	2	11504596
32.		8.915	NUT, HFH, 10X1.5 6H THD, 21.3 OD, 9.8 THK 13 HEX DR, GRD 9, ZF (R/AXL TORQ ARM BRKT) (8.917)	96-97	F	2	10255857
34.	4-D8	3.704	HANGER, EXH MUFF	96-97	F	1	10288522

cardiagn.com

35.	4-D7	3.701	**MUFFLER**, EXH (W/TAIL PIPE) (INCLS 20)	96-97	F (L36, Y87) (EXC VP6)	1	10289841
	4-D9	3.705	**MUFFLER**, EXH (W/TAIL PIPE) (INCLS 20) (3.701)	96-97	F (L36, Y87) (EXC VP6)	1	10289841
	4-D7	3.701	**MUFFLER**, EXH (W/TAIL PIPE) (INCLS 20)	96-97	F (L36, VP6) (EXPORT)	1	10294291
	4-D9	3.705	**MUFFLER**, EXH (W/TAIL PIPE) (INCLS 20) (3.701)	96-97	F (L36, VP6) (EXPORT)	1	10294291
36.		8.917	**NUT**, HFH, M8X1.25X8.8, 17.9 OD, 10 DIN, PREV TORQUE (EXH MUFF HNGR)	96-97		1	11517031
37.		8.977	**SCREW**, HEX M8X2.12X30 W/FL WA POR (EXH MUFF HNGR BRKT)	96-97	F	2	11504765
38.	4-D8	3.704	**HANGER**, EXH MUFF (3.706)	96-97	F (L36, Y87)	1	10275709

RPO DEFINITIONS

L36 – ENGINE GAS, 6 CYL, 3.8K, MFI, V6, HO (ERV6 SERIES)
M30 -- TRANSMISSION,AUTOMATIC 4 SPEED,4L60E,ELECTRONIC
M49 – TRANSMISSION MAN 5 SPD, BORG WARNER, 77MM, 3.75 1ST, .76 5TH, O/D
UD6 – ALARM,EXHAUST TEMPERATURE(EXPORT)
VP6 – NOISE LEVEL CONTROL
Y87 – PERFORMANCE ENHANCEMENT 3800 GT

cardiagn.com

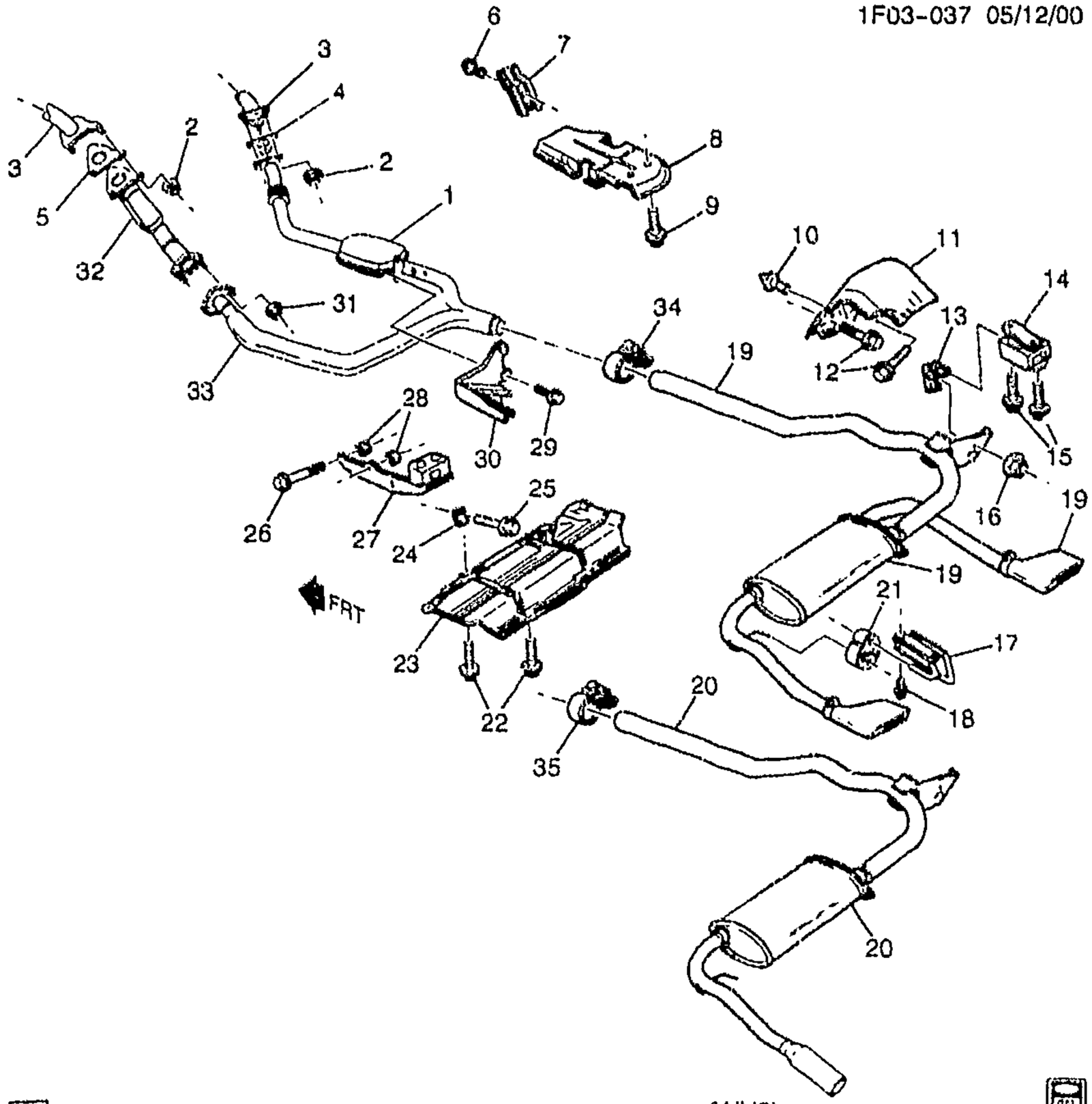

ch (WU8) 1F03-037

1998 F EXHAUST SYSTEM - V8 (LS1/5.7G)(EXC VP6)

1.	4-D4	3.685	CONVERTER, OXIDN CTLTC (W/EXH PIPE)	98	F (LS1) (EXC NM8)	RH	12559244
	4-C9	3.609	CONVERTER, OXIDN CTLTC (W/EXH PIPE) (3.685)	98	F (LS1) (EXC NM8)	RH	12559244
2.		8.915	NUT, HFH, 10X1.5 6H THD, 21.3 OD, 9.8 THK 13 HEX DR, GRD 9, ZF (EXH MANIF PIPE) (8.917)	98	.....	6	10255857
3.	4-C7	3.601	MANIFOLD, EXH	98	F (LS1, M30, MM6)	RH	12560193
	4-C7	3.601	MANIFOLD, EXH	98	F (LS1, M30, MM6)	LH	12560194
4.	4-D6	3.690	GASKET, CTLTC CONV (3.611) ..	98	F (LS1)	RH	88891747
5.	4-D6	3.690	GASKET, CTLTC CONV	98	F (LS1)	LH	12555806
6.		8.977	SCREW, M4.2-1.41X10 HEX LG WA HD W/SLR (EXH H/SHLD) ...	98	F	1	11515959
7.	4-C8	3.602	SHIELD, EXH HT	98	F	1	10198394
	4-C8	3.602	SHIELD, EXH HT	98	F (LS1)	LH	10273351

cardiagn.com

8.	4-D6	3.690	SHIELD, CTLTC CONV HT	98	F	1	10417743
9.		8.977	SCREW, M4.2-1.41X10 HEX LG WA HD W/SLR (CTLTC CONV H/SHLD)	98	F	5	11515959
10.	4-C11	3.616	BUMPER, EXH H/SHLD (PART OF 11) (16.650)	98	F	1	14005567
11.	4-C11	3.616	SHIELD, EXH PIPE HT (INCLS 10)	98	F	1	10223797
12.		8.977	SCREW, M4.2-1.41X10 HEX LG WA HD W/SLR (EXH PIPE H/SHLD)	98	F	3	11515959
13.	4-C11	3.616	BRACKET, EXH PIPE HNGR	98	F (LS1)	1	10272958
14.	4-D8	3.704	HANGER, EXH MUFF	98	F (LS1)	LH	10407350
15.		8.977	SCREW, HEX M8X2.12X30 W/FL WA POR (EXH MUFF INTER HNGR BRKT)	98	F	2	11504765
16.		8.917	NUT, M8X1.25X7.1, ZC 10 (EXH PIPE HNGR)	98	F	1	11515748
		8.929	WASHER, M8X24X2.3 (EXH PIPE HNGR)	98	F	1	11500323
17.	4-D8	3.704	HANGER, EXH MUFF	98	F (LS1)	LH	10407350
18.		8.977	SCREW, HEX M8X2.12X30 W/FL WA POR (EXH MUFF HNGR BRKT)	98	F	2	11504765
19.	4-D7	3.701	MUFFLER, EXH (W/TAIL PIPE) (DUAL) (INCLS 34) (DUAL)	98	F (LS1) (EXC VP6, WU8)	1	10414653
	4-D9	3.705	MUFFLER, EXH (W/TAIL PIPE) (DUAL) (INCLS 34) (DUAL) (3.701)	98	F (LS1) (EXC VP6, WU8)	1	10414653
20.	4-D7	3.701	MUFFLER, EXH (W/TAIL PIPE) (SINGLE) (INCLS 35) (POLISHED TAIL PIPE)	98	F (LS1, WU8) (EXC VP6)	1	10409537
	4-D9	3.705	MUFFLER, EXH (W/TAIL PIPE) (SINGLE) (INCLS 35) (POLISHED TAIL PIPE) (3.701)	98	F (LS1, WU8) (EXC VP6)	1	10409537
21.	4-D8	3.704	INSULATOR, EXH MUFF HNGR	98	F (LS1)	2	10243316
22.		8.977	SCREW, M4.2-1.41X10 HEX LG WA HD W/SLR (EXH MUFF H/SHLD)	98	F	6	11515959
23.	4-D9	3.705	SHIELD, EXH MUFF HT	98	F	1	10239715
24.	4-C8	3.602	BRACKET, EXH MUFF H/SHLD (3.704)	98	F	1	14047921
25.		8.977	SCREW, M4.2-1.41X10 HEX LG WA HD W/SLR (EXH MUFF H/SHLD BRKT)	98	F	1	11515959
26.		8.900	BOLT, HFH, M10X1.5X80, 9.8, PHOS, 38.5 THD (R/AXL TORQ ARM INR BRKT)	98	F (MM6, M49)	1	11504745
		8.900	BOLT, HFH M10X1.5X130 9.8 PZOR (R/AXL TORQ ARM INR BRKT)	98	F (M30)	2	11508489
27.	4-D6	3.690	BRACKET, CTLTC CONV HNGR	98	F (LS1, M30)	1	10270117
	4-D6	3.690	BRACKET, CTLTC CONV HNGR	98	F (LS1, MM6)	1	10293946
28.	4-N25	7.580	NUT, R/AXL TORQ ARM BRKT (M10X1.5 FLANGED HEX HEAD) (8.917)	98	F	2	10255857
29.		8.900	BOLT (CTLTC CONV HNGR)	98	F	2	11504596

cardiagn.com

							1F03-037
30.	4-D6	3.690	HANGER, CTLTC CONV	98	F (LS1)	RH	10262319
31.		8.915	NUT-HEX, M10X1.5, ZD 10 (CTLTC CONV)	98	F	2	11502488
32.	4-C9	3.609	CONVERTER, OXIDN CTLTC (W/EXH PIPE) (3.685)	98	F (LS1) (EXC NM8)	LH	12559245
33.	4-C9	3.609	PIPE, EXH C/OVR	98	F (LS1)	1	10407880
34.		N.S.	CLAMP, EXH PIPE (PART OF 19) (CLA 88896416)		.....		
35.		N.S.	CLAMP, EXH PIPE (PART OF 20) (CLA 88896416)		....		

RPO DEFINITIONS
LS1 -- ENGINE GAS, 8 CYL, 5.7L, SFI, ALUMINUM ENGINE
MM6 -- TRANSMISSION MAN 6 SPD, BORG WARNER, 85MM, 1ST 2.66, 6TH 0.50, O/D
M30 -- TRANSMISSION,AUTOMATIC 4 SPEED,4L60E,ELECTRONIC
M49 -- TRANSMISSION MAN 5 SPD, BORG WARNER, 77MM, 3.75 1ST, .76 5TH, O/D
NM8 -- EMISSION SYSTEM,LEADED FUEL(EXPORT)
VP6 -- NOISE LEVEL CONTROL
WU8 - SALES PACKAGE Z28 SS UPFITTER

cardiagn.com

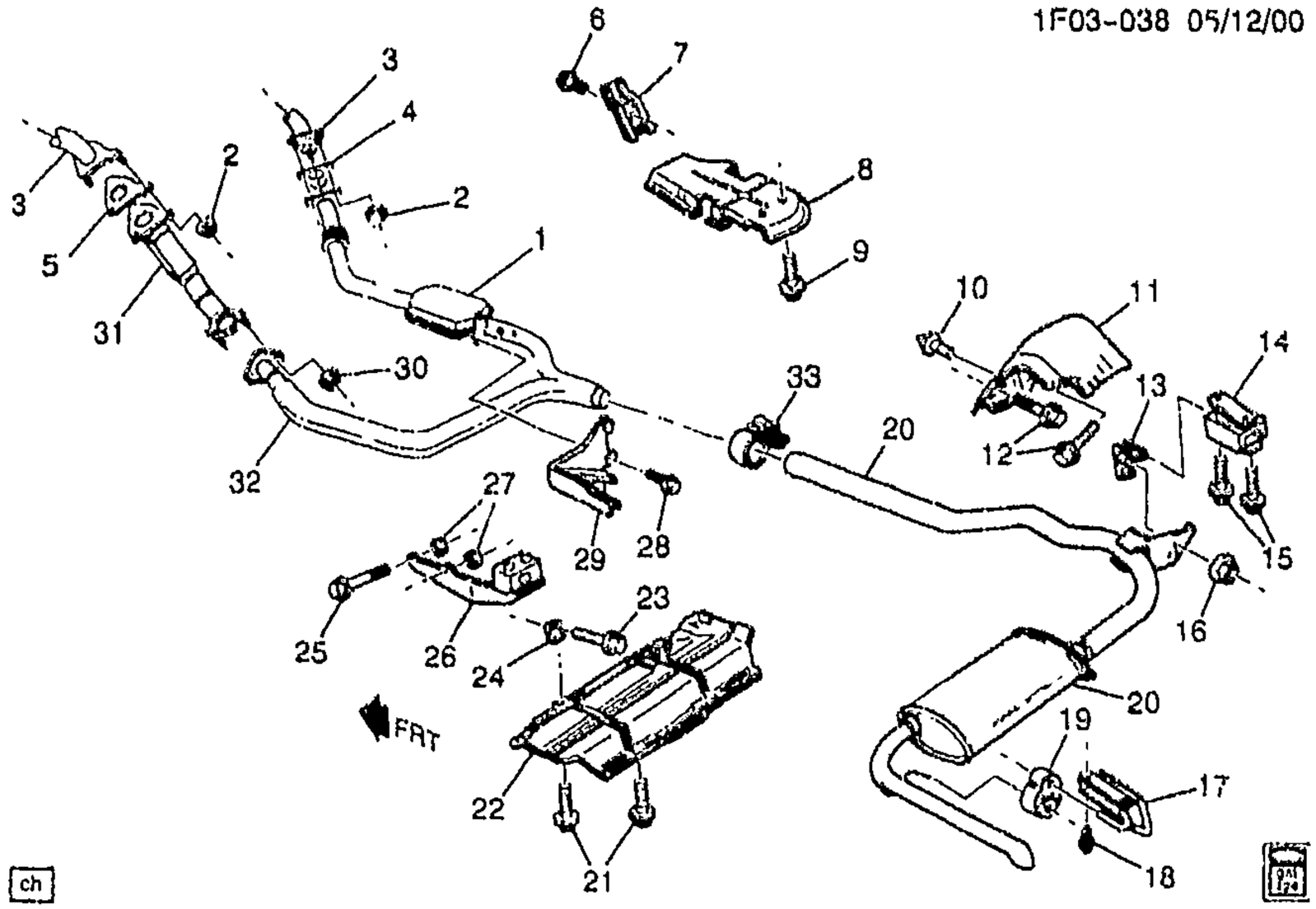

1998 F EXHAUST SYSTEM-V8 (LS1/5.7G)(SINGLE(NM8,VP6)
1999-2002 F EXHAUST SYSTEM-V8 (LS1/5.7G)(NM2,VP6)

1.	4-D4	3.685	CONVERTER, OXIDN CTLTC (W/EXH PIPE)	99	F (LS1)	RH	12559244
	4-C9	3.609	CONVERTER, OXIDN CTLTC (W/EXH PIPE) (3.685)	99	F (LS1)	RH	12559244
	4-D4	3.685	CONVERTER, OXIDN CTLTC (W/EXH PIPE)	00-02	F (LS1, NA3)	RH	12562398
	4-C9	3.609	CONVERTER, OXIDN CTLTC (W/EXH PIPE) (3.685)	00-02	F (LS1, NA3)	RH	12562398
	4-D4	3.685	CONVERTER, OXIDN CTLTC (W/EXH PIPE)	98	F (LS1, NM8) (EXPORT)	RH	12560410
	4-C9	3.609	CONVERTER, OXIDN CTLTC (W/EXH PIPE) (3.685)	98	F (LS1, NM8) (EXPORT)	RH	12560410
	4-D4	3.685	CONVERTER, OXIDN CTLTC (W/EXH PIPE)	99	F (LS1, NM8) (EXPORT)	RH	12559778
	4-C9	3.609	CONVERTER, OXIDN CTLTC (W/EXH PIPE) (3.685)	99	F (LS1, NM8) (EXPORT)	RH	12559778
2.		8.915	NUT, HFH, 10X1.5 6H THD, 21.3 OD, 9.8 THK 13 HEX DR, GRD 9, ZF (EXH MANIF PIPE) (8.917)	98-02		6	10255857
3.	4-C7	3.601	MANIFOLD, EXH	98-99	F (LS1, M30, MM6)	RH	12560193
	4-C7	3.601	MANIFOLD, EXH	98-99	F (LS1, M30, MM6)	LH	12560194
	4-C7	3.601	MANIFOLD, EXH	00	F (LS1, M30, MM6)	RH	12559506
	4-C7	3.601	MANIFOLD, EXH	00	F (LS1, M30, MM6)	LH	12559507
	4-C7	3.601	MANIFOLD, EXH	01-02	F (LS1)	RH	12567706
4.	4-D6	3.690	GASKET, CTLTC CONV (3.611)	98-02	F (LS1)	RH	88891747
5.	4-D6	3.690	GASKET, CTLTC CONV	98-02	F (LS1)	LH	12555806

cardiagn.com

6.		8.977	SCREW, M4.2-1.41X10 HEX LG WA HD W/SLR (EXH H/SHLD) ...	98-02	C	1	11515959
7.	4-C8	3.602	SHIELD, EXH HT	98-02	F	LH	10273361
8.	4-D6	3.690	SHIELD, CTLTC CONV HT	98-02	F	1	10417743
9.		8.977	SCREW, M4.2-1.41X10 HEX LG WA HD W/SLR (CTLTC CONV H/SHLD)	98-02	F	5	11515959
10.	4-C11	3.616	BUMPER, EXH H/SHLD (PART OF 11) (16.650)	98-02	F	1	14005567
11.	4-C11	3.616	SHIELD, EXH PIPE HT (INCLS 10)	98-02	F	1	10223797
12.		8.977	SCREW, M4.2-1.41X10 HEX LG WA HD W/SLR (EXH PIPE H/SHLD)	98-02	F	3	11515959
13.	4-C11	3.616	BRACKET, EXH PIPE HNGR	98-02	F (LS1)	1	10272958
14.	4-D8	3.704	HANGER, EXH MUFF	98-02	F	1	10407350
15.		8.977	SCREW, HEX M8X2.12X30 W/FL WA POR (EXH MUFF INTER HNGR BRKT)	98-02	F	2	11504765
16.		8.917	NUT, M8X1.25X7.1, ZC 10 (EXH PIPE HNGR)	98-02	F	1	11515748
		8.929	WASHER, M8X24X2.3 (EXH PIPE HNGR)	98-02	F	1	11500323
17.	4-D8	3.704	HANGER, EXH MUFF	98-02	F	1	10407350
18.		8.977	SCREW, HEX M8X2.12X30 W/FL WA POR (EXH MUFF HNGR BRKT)	98-02	F	2	11504765
19.	4-D8	3.704	INSULATOR, EXH MUFF HNGR	98-02	F (LS1)	2	10243316
20.	4-D7	3.701	MUFFLER, EXH (W/TAIL PIPE) (SINGLE)	98-02	F (LS1, VP6)	1	10407348
	4-D9	3.705	MUFFLER, EXH (W/TAIL PIPE) (SINGLE) (3.701)	98-02	F (LS1, VP6)	1	10407348
21.		8.977	SCREW, M4.2-1.41X10 HEX LG WA HD W/SLR (EXH MUFF H/SHLD)	98-02	F	6	11515959
22.	4-D9	3.705	SHIELD, EXH MUFF HT	98-02	F	1	10239715
23.		8.977	SCREW, M4.2-1.41X10 HEX LG WA HD W/SLR (EXH MUFF H/SHLD BRKT)	98-02	F	1	11515959
24.	4-C8	3.602	BRACKET, EXH MUFF H/SHLD (3.704)	98-02	F	1	14047921
25.		8.900	BOLT, HFH, M10X1.5X80, 9.8, PHOS, 38.5 THD (R/AXL TORQ ARM INR BRKT)	98-02	F (MM6, M49)	1	11504745
		8.900	BOLT, HFH M10X1.5X130 9.8 PZOR (R/AXL TORQ ARM INR BRKT)	98-02	F (M30)	2	11508489
26.	4-D6	3.690	BRACKET, CTLTC CONV HNGR	98-02	F (LS1, M30)	1	10270117
	4-D6	3.690	BRACKET, CTLTC CONV HNGR	98-02	F (LS1, MM6)	1	10293946
27.		8.915	NUT, HFH, 10X1.5 6H THD, 21.3 OD, 9.8 THK 13 HEX DR, GRD 9, ZF (R/AXL TORQ ARM BRKT) (8.917)	98-02		AR	10255857
28.		8.900	BOLT (CTLTC CONV HNGR)	98-02	F	2	11504596
29.	4-D8	3.690	HANGER, CTLTC CONV	98-02	F (LS1)	RH	10262319
30.		8.915	NUT--HEX, M10X1.5, ZD 10 (CTLTC CONV)	98-02	F	2	11502488

cardiagn.com

31.	4-D4	3.685	CONVERTER, OXIDN CTLTC (W/EXH PIPE)	99	F (LS1)	LH	12559245
	4-C9	3.609	CONVERTER, OXIDN CTLTC (W/EXH PIPE) (3.685)	99	F (LS1)	LH	12559245
	4-D4	3.685	CONVERTER, OXIDN CTLTC (W/EXH PIPE)	00-02	F (LS1)	LH	12562397
	4-C9	3.609	CONVERTER, OXIDN CTLTC (W/EXH PIPE) (3.685)	00-02	F (LS1)	LH	12562397
	4-D4	3.685	CONVERTER, OXIDN CTLTC (W/EXH PIPE)	98	F (LS1, NM8) (EXPORT)	LH	12561197
	4-C9	3.609	CONVERTER, OXIDN CTLTC (W/EXH PIPE) (3.685)	98	F (LS1, NM8) (EXPORT)	LH	12561197
	4-D4	3.685	CONVERTER, OXIDN CTLTC (W/EXH PIPE)	99-02	F (LS1, NM2) (EXPORT)	LH	12561197
	4-C9	3.609	CONVERTER, OXIDN CTLTC (W/EXH PIPE) (3.685)	99-02	F (LS1, NM2) (EXPORT)	LH	12561197
32.	4-C9	3.609	PIPE, EXH C/OVR	98-02	F (LS1)	1	10407880
33.		N.S.	CLAMP, EXH PIPE (PART OF 20) (CLA 88896416)		....		

RPO DEFINITIONS
LS1 – ENGINE GAS, 8 CYL, 5.7L, SFI, ALUMINUM ENGINE
MM6 – TRANSMISSION MAN 6 SPD, BORG WARNER, 85MM, 1ST 2.66, 6TH 0.50, O/D
M30 – TRANSMISSION,AUTOMATIC 4 SPEED,4L60E,ELECTRONIC
M49 – TRANSMISSION MAN 5 SPD, BORG WARNER, 77MM, 3.75 1ST, .76 5TH, O/D
NA3 – EMISSION SYSTEM JAPAN
NM2 – EMISSION SYSTEM EXPORT, LEADED FUEL
NM8 – EMISSION SYSTEM,LEADED FUEL(EXPORT)
VP6 – NOISE LEVEL CONTROL

cardiagn.com

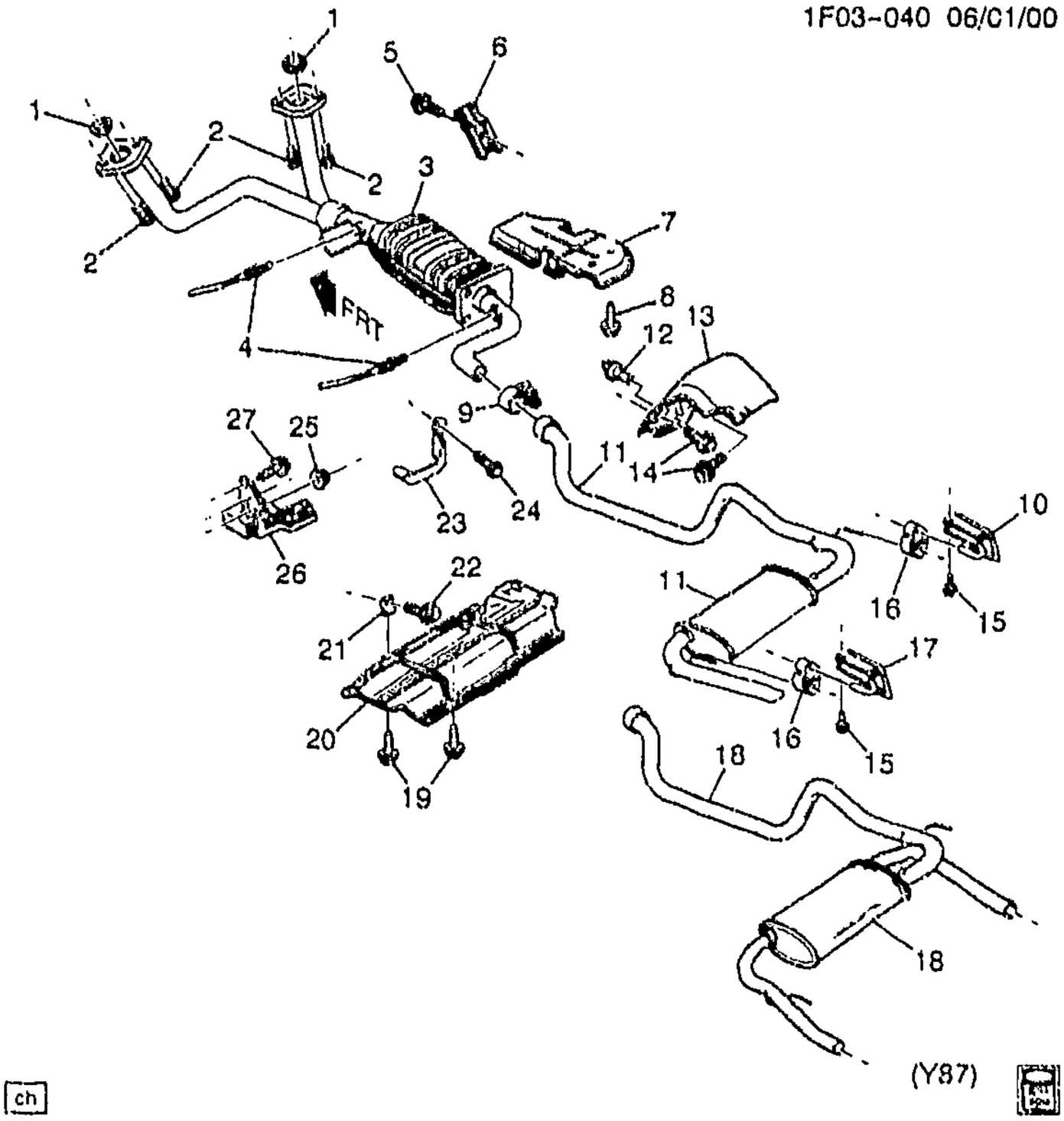

ch

1F03-040

1998 F EXHAUST SYSTEM-V6 (L36/3.8K)

1.	4-C10	3.611	SEAL, EXH MANIF PIPE	98	F (L36)	2	24505017
2.	4-C11	3.613	BOLT, EXH MANIF PIPE	98	F (L36)	4	24503965
3.	4-D4	3.685	CONVERTER, 3WAY CTLTC (W/EXH MANIF PIPE)	98	F (L36)	1	24508229
	4-C9	3.609	CONVERTER, 3WAY CTLTC (W/EXH MANIF PIPE) (3.685)	98	F (L36)	1	24508229
4.	4-C20	3.682	SENSOR, HTD OXY (POSN 3) (AC-DELCO #AFS116)	98	F	1	25312207
5.		8.977	SCREW, M4.2-1.41X10 HEX LG WA HD W/SLR (EXH H/SHLD) ...	98	F	1	11515959
6.	4-C8	3.602	SHIELD, EXH HT	98	F	1	10198394
7.	4-D6	3.690	SHIELD, CTLTC CONV HT	98	F	1	10417743
8.		8.977	SCREW, M4 2-1.41X10 HEX LG WA HD W/SLR (CTLTC CONV H/SHLD)	98	F	5	11515959
9.		N.S.	CLAMP, EXH PIPE (PART OF 11) (CLA 88896415)	98	F	1	
10.	4-C11	3.616	BRACKET, EXH PIPE HNGR	98	F (L36)	RH	10278237
11.	4-D7	3.701	MUFFLER, EXH (W/TAIL PIPE) (SINGLE) (INCLS 9)	98	F (L36, VP6)	1	10272930

cardiagn.com

	4-D9	3.705	**MUFFLER**, EXH (W/TAIL PIPE) (SINGLE) (INCLS 9) (3.701)	98	F (L36, VP6)	1	10272930
	4-D7	3.701	**MUFFLER**, EXH (W/TAIL PIPE) (SINGLE) (INCLS 9)	98	F (L36) (EXC VP6, Y87)	1	10414650
	4-D9	3.705	**MUFFLER**, EXH (W/TAIL PIPE) (SINGLE) (INCLS 9) (3.701)	98	F (L36) (EXC VP6, Y87)	1	10414650
12.	4-C11	3.616	**BUMPER**, EXH H/SHLD (PART OF 13) (16.650)	98	F	1	14005567
13.	4-C11	3.616	**SHIELD**, EXH PIPE HT (INCLS 12)	98	F	1	10223797
14.		8.977	**SCREW**, M4.2-1.41X10 HEX LG WA HD W/SLR (EXH PIPE H/SHLD)	98	F	3	11515959
15.		8.977	**SCREW**, HEX M8X2.12X30 W/FL WA POR (EXH MUFF INTER HNGR BRKT)	98	F	4	11504765
16.	4-D8	3.704	**INSULATOR**, EXH MUFF HNGR .	98	.....		
17.	4-D8	3.704	**HANGER**, EXH MUFF	98	F (L36)	LH	10278236
18.	4-D7	3.701	**MUFFLER**, EXH (W/TAIL PIPE) (DUAL)	98	F (L36, Y87) (EXC VP6)	1	10414652
	4-D9	3.705	**MUFFLER**, EXH (W/TAIL PIPE) (DUAL) (3.701)	98	F (L36, Y87) (EXC VP6)	1	10414652
19.		8.977	**SCREW**, M4.2 -1.41X10 HEX LG WA HD W/SLR (EXH MUFF H/SHLD)	98	F	6	11515959
20.	4-D9	3.705	**SHIELD**, EXH MUFF HT	98	F	1	10239715
21.	4-C8	3.602	**BRACKET**, EXH MUFF H/SHLD (3.704)	98	F	1	14047921
22.		8.977	**SCREW**, M4.2-1.41X10 HEX LG WA HD W/SLR (EXH MUFF H/SHLD BRKT)	98	F	1	11515959
23.	4-D6	3.690	**HANGER**, CTLTC CONV	98	F (L36)	1	10289505
24.		8.900	**BOLT** (CTLTC CONV HNGR)	98	F	2	11504596
25.		8.915	**NUT**, HFH, 10X1.5 6H THD, 21.3 OD, 9.8 THK 13 HEX DR, GRD 9, ZF (R/AXL TORQ ARM BRKT) (8.917)	98	F	2	10255957
26.	4-D6	3.690	**BRACKET**, CTLTC CONV FRT HNGR	98	F (L36, M49)	1	10281475
	4-D6	3.690	**BRACKET**, CTLTC CONV FRT HNGR	98	F (L36, M30)	1	10280919
27.		8.900	**BOLT**, HFH M10X1.5X130 9.8 PZOR (M10X1.5X130)	98	F	1	11508489

RPO DEFINITIONS

L36 - ENGINE GAS, 6 CYL, 3.8K, MFI, V6, HO (ERV6 SERIES)
M30 - TRANSMISSION,AUTOMATIC 4 SPEED,4L60E,ELECTRONIC
M49 - TRANSMISSION MAN 5 SPD, BORG WARNER, 77MM, 3.75 1ST, .76 5TH, O/D
VP6 - NOISE LEVEL CONTROL
Y87 - PERFORMANCE ENHANCEMENT 3800 GT

cardiagn.com

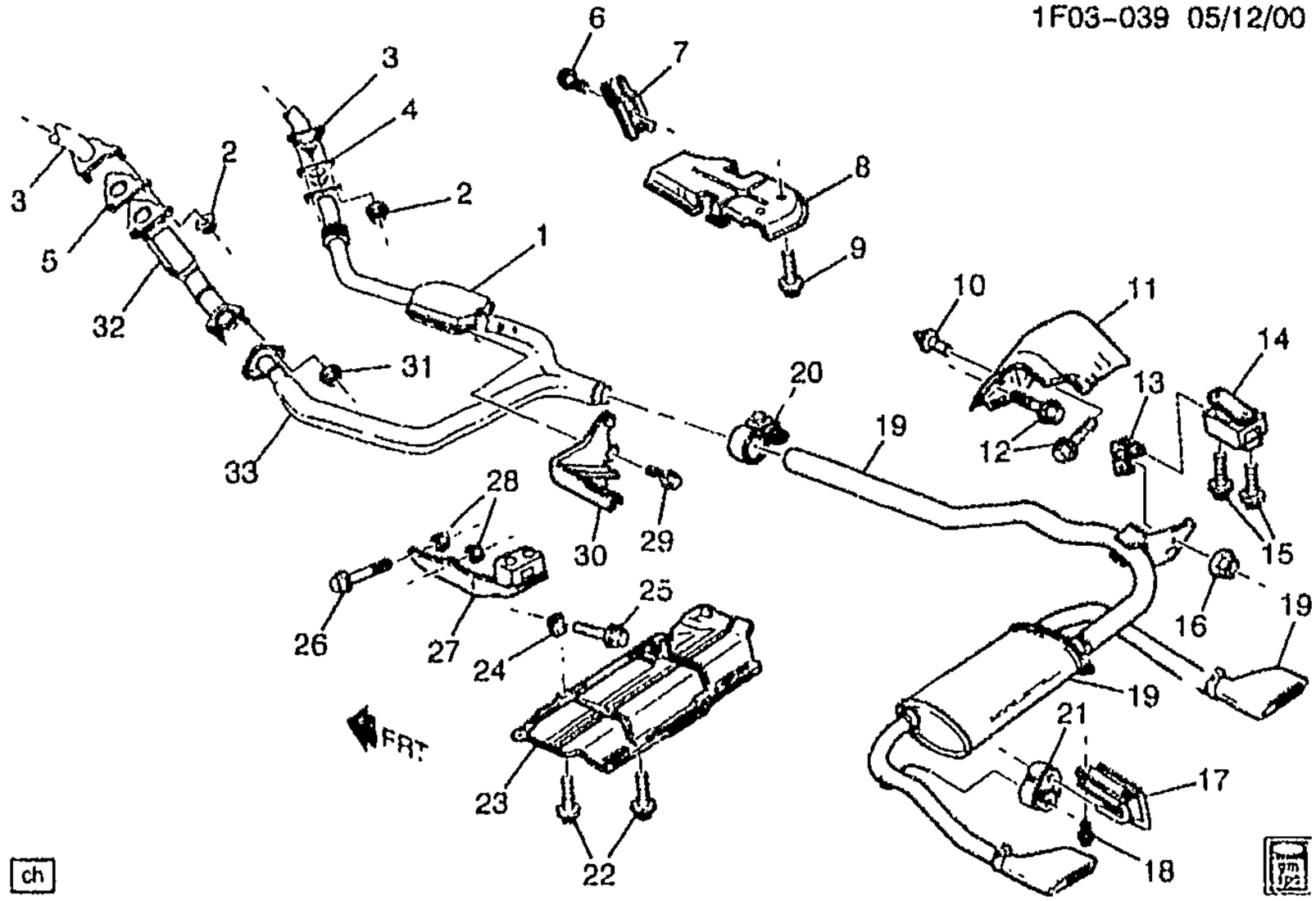

1F03-039

1999 F EXHAUST SYSTEM-V8 (LS1/5.7G)(DUAL(EXC VP6)

1.	4-D4	3.685	CONVERTER, OXIDN CTLTC (W/EXH PIPE)	99	F (LS1)	RH	12559244
	4-C9	3.609	CONVERTER, OXIDN CTLTC (W/EXH PIPE) (3.685)	99	F (LS1)	RH	12559244
2.		8.915	NUT, HFH, 10X1.5 6H THD, 21.3 OD, 9.8 THK 13 HEX DR, GRD 9, ZF (EXH MANIF PIPE) (8.917)	99		6	10255657
3.	4-C7	3.601	MANIFOLD, EXH	99	F (LS1, M30, MM6)	RH	12560193
	4-C7	3.601	MANIFOLD, EXH	99	F (LS1, M30, MM6)	LH	12560194
4.	4-D6	3.690	GASKET, CTLTC CONV (3.611)	99	F (LS1)	RH	88891747
5.	4-D6	3.690	GASKET, CTLTC CONV	99	F (LS1)	LH	12555806
6.		8.977	SCREW, M4.2-1.41X10 HEX LG WA HD W/SLR (EXH H/SHLD)	99	F	1	11515959
7.	4-C8	3.602	SHIELD, EXH HT	99	F	1	10198394
	4-C8	3.602	SHIELD, EXH HT	99	F (LS1)	LH	10273351
8.	4-D6	3.690	SHIELD, CTLTC CONV HT	99	F	1	10417743
9.		8.977	SCREW, M4.2-1.41X10 HEX LG WA HD W/SLR (CTLTC CONV H/SHLD)	99	F	5	11515959
10.	4-C11	3.616	BUMPER, EXH H/SHLD (PART OF 11) (16.650)	99	F	1	14005567
11.	4-C11	3.616	SHIELD, EXH PIPE HT (INCL 10)	99	F	1	10223797
12.		8.977	SCREW, M4.2-1.41X10 HEX LG WA HD W/SLR (EXH PIPE H/SHLD)	99	F	3	11515959
13.	4-C11	3.616	BRACKET, EXH PIPE HNGR	99	F (LS1)	1	10272958
14.	4-D8	3.704	HANGER, EXH MUFF	99	F (LS1)	LH	10407350

cardiagn.com

15.		8.977	**SCREW**, HEX M8X2.12X30 W/FL WA POR (EXH MUFF INTER HNGR BRKT)	99	F	2	11504765
16.		8.917	**NUT**, M8X1.25X7.1, ZC 10 (EXH PIPE HNGR)	99	F	1	11515746
		8.929	**WASHER**, M8X24X2.3 (EXH PIPE HNGR)	99	F	1	11500323
17.	4-D8	3.704	**HANGER**, EXH MUFF	99	F (LS1)	LH	10407350
18.		8.977	**SCREW**, HEX M8X2.12X30 W/FL WA POR (EXH MUFF HNGR BRKT)	99	F	2	11504765
19.	4-D7	3.701	**MUFFLER**, EXH (W/TAIL PIPE) (DUAL) (INCLS 20) (DUAL)	99	F (LS1) (EXC VP6, WU8)	1	10414653
	4-D9	3.705	**MUFFLER**, EXH (W/TAIL PIPE) (DUAL) (INCLS 20) (DUAL) (3.701)	99	F (LS1) (EXC VP6, WU8)	1	10414653
	4-D7	3.701	**MUFFLER**, EXH (W/TAIL PIPE) (DUAL) (INCLS 20) (POLISHED TAIL PIPE (S)	99	F (LS1, WU8) (EXC VP6)	1	10421501
	4-D9	3.705	**MUFFLER**, EXH (W/TAIL PIPE) (DUAL) (INCLS 20) (POLISHED TAIL PIPE (S) (3.701)	99	F (LS1, WU8) (EXC VP6)	1	10421501
20.		N.S.	**CLAMP**, EXH PIPE (PART OF 19) (CLA 88896416)				
21.	4-D8	3.704	**INSULATOR**, EXH MUFF HNGR	99	F (LS1)	2	10243316
22.		8.977	**SCREW**, M4.2-1.41X10 HEX LG WA HD W/SLR (EXH MUFF H/SHLD)	99	F	6	11515959
23.	4-D9	3.705	**SHIELD**, EXH MUFF HT	99	F	1	10239715
24.	4-C8	3.602	**BRACKET**, EXH MUFF H/SHLD (3.704)	99	F	1	14047921
25.		8.977	**SCREW**, M4.2-1.41X10 HEX LG WA HD W/SLR (EXH MUFF H/SHLD BRKT)	99	F	1	11515959
26.		8.900	**BOLT**, HFH, M10X1.5X80, 9.8, PHOS, 38.5 THD (R/AXL TORQ ARM INR BRKT)	99	F (MM6, M49)	1	11504745
		8.900	**BOLT**, HFH M10X1.5X130 9.8 PZOR (R/AXL TORQ ARM INR BRKT)	99	F (M30)	2	11508489
27.	4-D6	3.690	**BRACKET**, CTLTC CONV HNGR	99	F (LS1, M30)	1	10270117
	4-D6	3.690	**BRACKET**, CTLTC CONV HNGR	99	F (LS1, MM6)	1	10293946
28.	4-N25	7.580	**NUT**, R/AXL TORQ ARM BRKT (M10X1.5 FLANGED HEX HEAD) (8.917)	99	F	2	10255857
29.		8.900	**BOLT** (CTLTC CONV HNGR)	99	F	2	11504596
30.	4-D6	3.690	**HANGER**, CTLTC CONV	99	F (LS1)	RH	10262319
31.		8.915	**NUT-HEX**, M10X1.5, ZD 10 (CTLTC CONV)	99	F	2	11502488
32.	4-C9	3.609	**CONVERTER**, OXIDN CTLTC (W/EXH PIPE) (3.685)	99	F (LS1)	LH	12559245
	4-C9	3.609	**CONVERTER**, OXIDN CTLTC (W/EXH PIPE) (3.685)	99	F (LS1, NM2) (EXPORT)	LH	12561197
33.	4-C9	3.609	**PIPE**, EXH C/OVR (W/CONVERTER)	99	F (LS1)	1	10407880

cardiagn.com

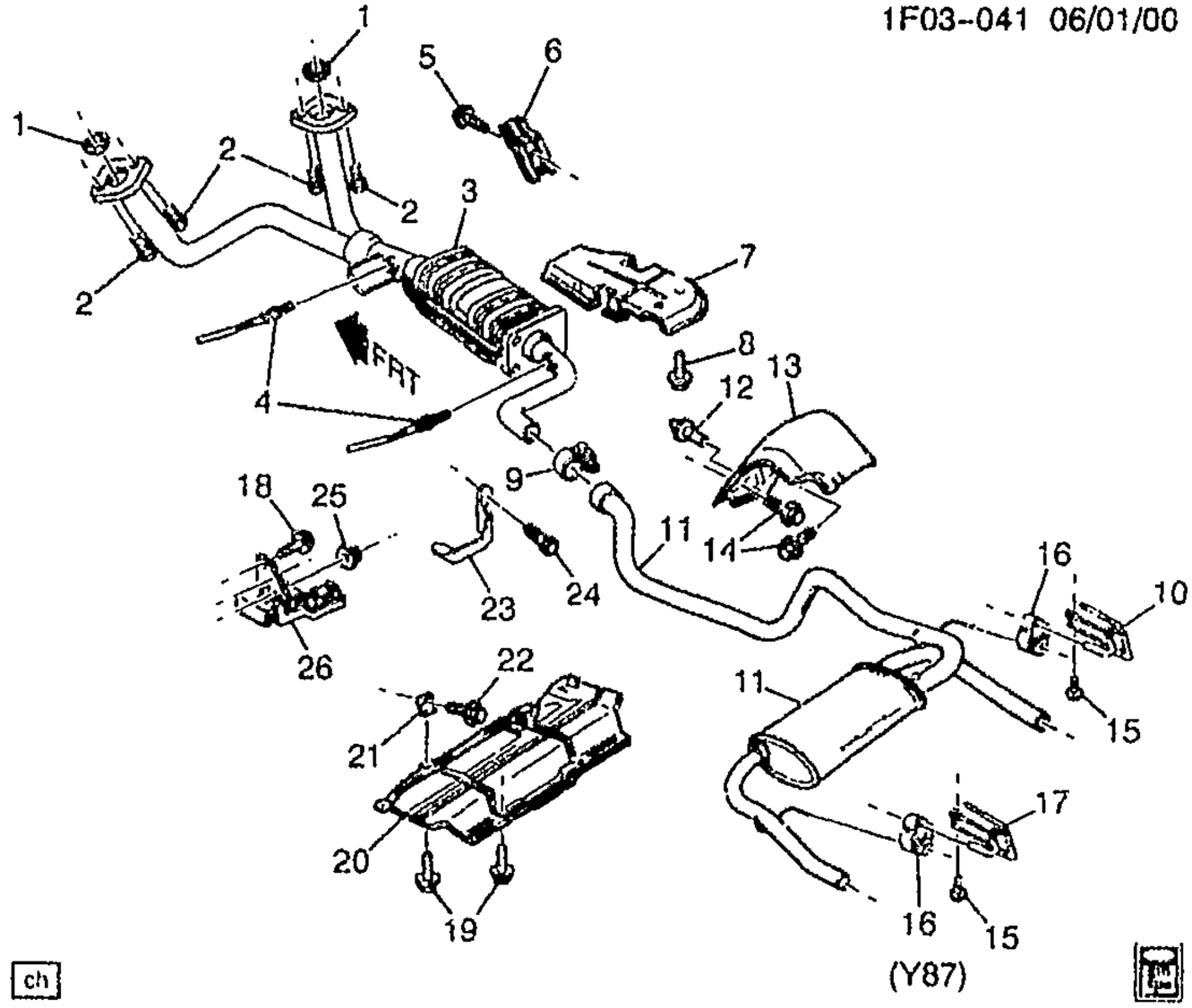

1F03-041

1999-2002 F EXHAUST SYSTEM-V6 (L36/3.8K)(DUAL

1.	4-C10	3.611	SEAL, EXH MANIF PIPE	99-02	F (L36)	2	24505017
2.	4-C11	3.613	BOLT, EXH MANIF PIPE	99-02	F (L36)	4	24503965
3.	4-D4	3.685	CONVERTER, 3WAY CTLTC (W/EXH MANIF PIPE)	99	F (L36, NF2)	1	24508229
	4-C9	3.609	CONVERTER, 3WAY CTLTC (W/EXH MANIF PIPE) (3.685)	99	F (L36, NF2)	1	24508229
	4-D4	3.685	CONVERTER, 3WAY CTLTC (W/EXH MANIF PIPE) (ID:DB)	99	F (L36, NB7, NC1)	1	24508242
	4-C9	3.609	CONVERTER, 3WAY CTLTC (W/EXH MANIF PIPE) (ID:DB) (3.685)	99	F (L36, NB7, NC1)	1	24508242
	4-D4	3.685	CONVERTER, 3WAY CTLTC (W/EXH MANIF PIPE)	00	F (L36, NA3, NA7, NF2)	1	24507717
	4-C9	3.609	CONVERTER, 3WAY CTLTC (W/EXH MANIF PIPE) (3.685)	00	F (L36, NA3, NA7, NF2)	1	24507717
	4-D4	3.685	CONVERTER, 3WAY CTLTC (W/EXH MANIF PIPE)	00	F (L36, NC1)	1	24507718
	4-C9	3.609	CONVERTER, 3WAY CTLTC (W/EXH MANIF PIPE) (3.685)	00	F (L36, NC1)	1	24507718
	4-D4	3.685	CONVERTER, 3WAY CTLTC (W/EXH MANIF PIPE)	01-02	F (L36)	1	12564498
	4-C9	3.609	CONVERTER, 3WAY CTLTC (W/EXH MANIF PIPE) (3.685)	01-02	F (L36)	1	12564498
4.	4-C26	3.682	SENSOR, HTD OXY (POSN 3) (AC-DELCO #AFS116)	99-02	F	1	25312207
5.		8.977	SCREW, M4.2-1.41X10 HEX LG WA HD W/SLR (EXH H/SHLD) ...	99-02	F	1	11615959
6.	4-C8	3.602	SHIELD, EXH HT	99-02	F	1	10198394

cardiagn.com

7.	4–D6	3.690	**SHIELD**, CTLTC CONV HT	99–02	F	1	10417743
8.		8.977	**SCREW**, M4.2–1.41X10 HEX LG WA HD W/SLR (CTLTC CONV H/SHLD)	99–02	F	5	11515959
9.		N.S.	**CLAMP**, EXH PIPE (PART OF 11) (CLA 88896415)	99–02	F	1	
10.	4–C11	3.616	**BRACKET**, EXH PIPE HNGR	99–02	F (L36)	1	10278237
11.	4–D7	3.701	**MUFFLER**, EXH (W/TAIL PIPE) (DUAL) (INCLS 9)	99	F (L36, Y87) (EXC VP6)	1	10414652
	4–D9	3.705	**MUFFLER**, EXH (W/TAIL PIPE) (DUAL) (INCLS 9) (3.701)	99	F (L36, Y87) (EXC VP6)	1	10414652
	4–D7	3.701	**MUFFLER**, EXH (W/TAIL PIPE) (DUAL) (INCLS 9)	00–02	F (L36, Y87) (EXC VP6)	1	10306198
	4–D9	3.705	**MUFFLER**, EXH (W/TAIL PIPE) (DUAL) (INCLS 9) (3.701)	00–02	F (L36, Y87) (EXC VP6)	1	10306198
12.	4–C11	3.616	**BUMPER**, EXH H/SHLD (PART OF 13) (16.650)	99–02	F	1	14005567
13.	4–C11	3.616	**SHIELD**, EXH PIPE HT (INCLS 12)	99–02	F	1	10223797
14.		8.977	**SCREW**, M4.2–1.41X10 HEX LG WA HD W/SLR (EXH PIPE H/SHLD)	99–02	F	3	11515959
15.		8.977	**SCREW**, HEX M8X2.12X30 W/FL WA POR (EXH MUFF INTER HNGR BRKT)	99–02	F	4	11504765
16.		N.S.	**INSULATOR**, EXH MUFF HNGR		(L36)		
17.	4–D8	3.704	**HANGER**, EXH MUFF	99–02	F (L36)	LH	10278236
18.		8.900	**BOLT**, HFH M10X1.5X130 9.8 PZOR (M10X1.5X130)	99–02	F	1	11508489
19.		8.977	**SCREW**, M4.2–1.41X10 HEX LG WA HD W/SLR (EXH MUFF H/SHLD)	99–02	F	6	11515959
20.	4–D9	3.705	**SHIELD**, EXH MUFF HT	99–02	F	1	10239715
21.	4–C8	3.602	**BRACKET**, EXH MUFF H/SHLD (3.704)	99–02	F	1	14047921
22.		8.977	**SCREW**, M4.2–1.41X10 HEX LG WA HD W/SLR (EXH MUFF H/SHLD BRKT)	99–02	F	1	11515959
23.	4–D6	3.690	**HANGER**, CTLTC CONV	99–02	F (L36)	1	10289505
24.		8.900	**BOLT** (CTLTC CONV HNGR)	99–02	F	2	11504596
25.		8.915	**NUT**, HFH, 10X1.5 6H THD, 21.3 OD, 9.8 THK 13 HEX DR, GRD 9, ZF (R/AXL TORQ ARM BRKT) (8.917)	99–02	F	2	10255857
26.	4–D6	3.690	**BRACKET**, CTLTC CONV FRT HNGR	99–02	F (L36, M49)	1	10281475
	4–D6	3.690	**BRACKET**, CTLTC CONV FRT HNGR	99–02	F (L36, M30)	1	10280919

RPO DEFINITIONS

L36 – ENGINE GAS, 6 CYL, 3.8K, MFI, V6, HO (ERV6 SERIES)
M30 – TRANSMISSION,AUTOMATIC 4 SPEED,4L60E,ELECTRONIC
M49 – TRANSMISSION MAN 5 SPD, BORG WARNER, 77MM, 3.75 1ST, .76 5TH, O/D
NA3 – EMISSION SYSTEM JAPAN
NA7 – EMISSION SYSTEM EUROPEAN
NB7 – EMISSION SYSTEM CALIFORNIA, TLEV
NC1 – EMISSION SYSTEM CALIFORNIA, LEV
NF2 – EMISSION SYSTEM,FEDERAL,TIER 1

cardiagn.com

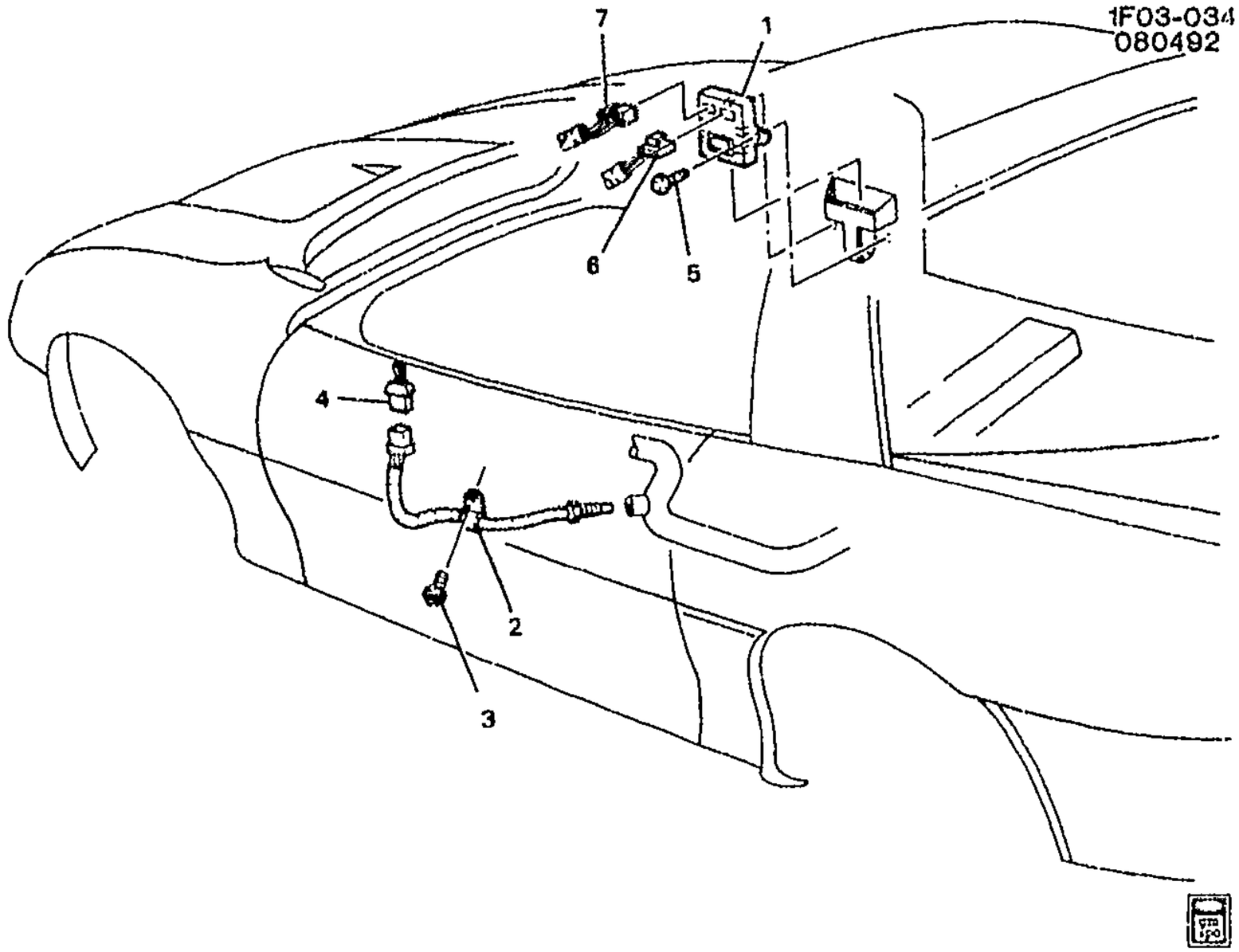

1F03-034

1993-1997 F CATALYTIC CONVERTER HEAT ALARM (UD6)

1.	4-D5	3.686	AMPLIFIER, CTLTC CONV TEMP & SPD ALERT ALARM SIG (JAPAN)	93-95	F (UD6) (EXPORT)	1	25517098
	4-N25	9.762	AMPLIFIER, CTLTC CONV TEMP & SPD ALERT ALARM SIG (JAPAN) (3.686)	93-95	F (UD6) (EXPORT)	1	25517098
	4-D5	3.686	AMPLIFIER, CTLTC CONV TEMP & SPD ALERT ALARM SIG	96	F (LT1, UD6) (EXPORT)	1	10261176
	4-N25	9.762	AMPLIFIER, CTLTC CONV TEMP & SPD ALERT ALARM SIG (3.686)	96	F (LT1, UD6) (EXPORT)	1	10261176
	4-D5	3.686	AMPLIFIER, CTLTC CONV TEMP & SPD ALERT ALARM SIG (JAPAN)	96	F (L36, UD6) (EXPORT)	1	25517098
	4-N25	9.762	AMPLIFIER, CTLTC CONV TEMP & SPD ALERT ALARM SIG (JAPAN) (3.686)	96	F (L36, UD6) (EXPORT)	1	25517098
	4-D5	3.686	AMPLIFIER, CTLTC CONV TEMP & SPD ALERT ALARM SIG (JAPAN)	97	F (UD6) (EXPORT)	1	25517098
	4-N25	9.762	AMPLIFIER, CTLTC CONV TEMP & SPD ALERT ALARM SIG (JAPAN) (3.686)	97	F (UD6) (EXPORT)	1	25517098
2.		N.S.	SENSOR, CTLTC CONV TEMP ALARM	94-97	.....		

cardiagn.com

	4–D5	3.686	**SENSOR**, CTLTC CONV TEMP ALARM	93	F (UD6) (EXPORT)	1	12123525
3.		8.977	**SCREW**, MET HEX HD (M6.3X1.81) (ENG WRG HARN CLA)	93–97	.....	1	11502707
4.	4–D5	3.686	**CONNECTOR**, ALARM–CTLTC CONV TEMP (GREY) (2–WAY F, M/P 150 SLD W/LEADS) (4.710) (AC–DELCO #PT1357)	93–97	F (UD6)	1	15306302
5.	4–D5	3.686	**RETAINER**, CTLTC CONV TEMP ALARM AMPF (PUSH IN) (12.804)	93–97	F (UD6) (EXPORT)	2	20514862
6.		N.S.	**CONNECTOR**, ALARM–CTLTC CONV TEMP		.....		
7.		N.S.	**CONNECTOR**, ALARM–CTLTC CONV TEMP		.....		

RPO DEFINITIONS
LT1 – ENGINE–GAS, 8 CYL, 5.7L(5.7P),MFI,HO
L36 – ENGINE GAS, 6 CYL, 3.8K, MFI, V6, HO (ERV6 SERIES)
UD6 – ALARM,EXHAUST TEMPERATURE(EXPORT)

cardiagn.com

ILLUSTRATION INDEX

	TITLE	GRID
1993–2002	F 5–SPEED MANUAL TRANSMISSION (BORG WARNER–77MM)(M49)	5–C4
1993	F SHIFT CONTROLS/MANUAL TRANSMISSION (M28,M29)	5–C12
1994–2002	F SHIFT CONTROLS/MANUAL TRANSMISSION (MM6)	5–C12
1993–2002	F SHIFT CONTROLS/MANUAL TRANSMISSION (M49)	5–C14

cardiagn.com

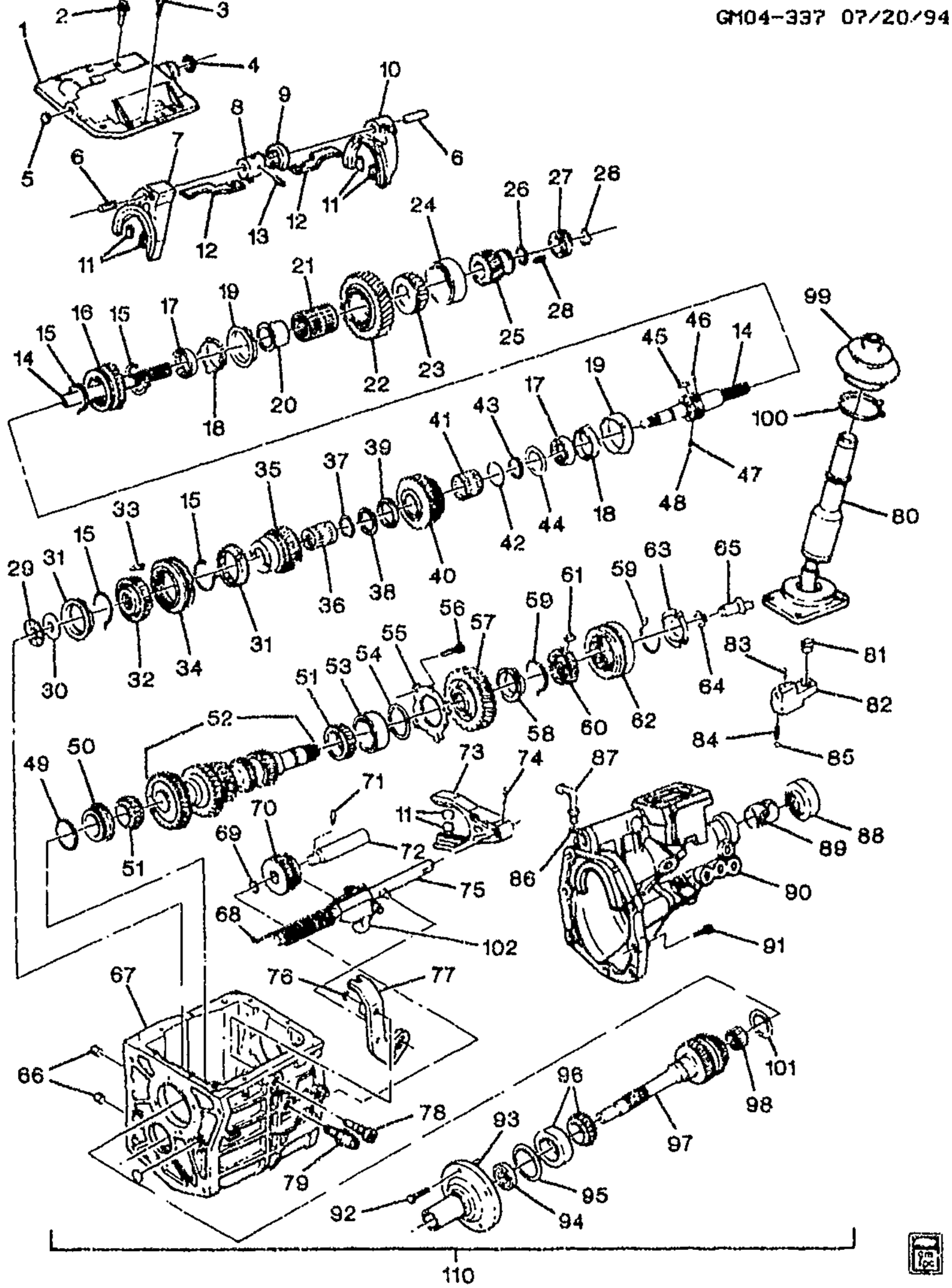

GM04-337G

1993-2002 F 5-SPEED MANUAL TRANSMISSION (BORG WARNER-77MM)(M49)

1.	5-A13	4.105	COVER, TRANS (CASE) (AC-DELCO #10117840)	93-95 F (M49)	1	10117840
	5-A13	4.105	COVER, TRANS (CASE) (AC-DELCO #14071794)	96-02 F (M49)	1	14071794

cardiagn.com

2.	5–A13	4.105	BOLT, TRANS CVR (M6 X 32) (4.356)	93–02	F (M49)	2	14058959
3.	5–A12	4.085	BOLT, TRANS (M12X1.75X40)	93–96	F (M49)	4	14056613
	5–A12	4.085	BOLT, TRANS (M8X1.25X20) (4.012)	93–02	F (M49)	4	15546805
	5–A12	4.085	BOLT, TRANS (M12X1.75X45, 30 THD, 26.6 OD, 10.9) (8.900)	00–02	F (M49)	2	11515778
	5–A12	4.085	BOLT, TRANS (HFH M12X1.75X50 10.9 7114M 26.5OD P–PT) (HFH, M12X1.75X40) (8.900)	97–02	F (M49)	4	22651578
4.	5–N27	0.679	SEAL, TRANS CONV CVR (SHFT SHF) (O–RING) (4.356)	93–02	F (M49)	1	14058970
5.		8.970	PLUG, 3/4 IN EXPANSION	93–02		AR	172531
6.	5–A13	4.309	SHAFT, SHFT (AC–DELCO #10117841)	93–02	F (M49)	1	10117841
7.	5–A13	4.303	FORK, 3RD & 4TH SHFT	93–02	F (M49)	1	14053312
8.	5–A12	4.045	ARM, CONT SEL	93–02	F (M49)	1	12475526
9.	5–A13	4.307	PLATE, SHFT INTLK	93–02	F (M49)	1	14050763
10.	5–A13	4.303	FORK, 1ST & 2ND SHFT	93–02	F (M49)	1	14050759
11.	5–A14	4.312	INSERT, 1ST & 2ND SHFT FORK (4.311) (AC–DELCO #10065276)	93–02	F (M49)	2	10065276
	5–A14	4.312	INSERT, 3RD & 4TH SHFT FORK (4.311) (AC–DELCO #10065276)	93–02	F (M49)	2	10065276
	5–A14	4.312	INSERT, 5TH SHFT FORK (4.311) (AC–DELCO #10065276)	93–02	F (M49)	2	10065276
12.	5–A13	4.303	PLATE, 1ST & 2ND SHFT FORK (4.311)	93–02	F (M49)	2	12540448
13.		8.939	PIN, ROLL – 3/16 X 7/8 (AC–DELCO #456652)	93–02		AR	456652
14.	5–A16	4.403	SHAFT, MAIN (W/1ST & 2ND SPD SYN) (INCLS 16–19, 43–48) (AC–DELCO #10117818)	93–96	F (M49)	1	10117818
	5–A16	4.403	SHAFT, MAIN (W/1ST & 2ND SPD SYN) (INCLS 16–19, 43–48)	96–02	F (M49)	1	12542556
15.	5–A16	4.384	SPRING, SYN (1ST & 2ND, 3RD & 4TH) (PART OF 34)	93–02	F (M49)	4	15618013
16.		N.S.	GEAR, REV SLDG (PART OF 14)				
17.	5–A16	4.383	CONE, 1ST GR SYN INR (PART OF 14) (AC–DELCO #10117822)	93–02	F (M49)	1	10117822
	5–A16	4.383	CONE, 2ND GR SYN INR (PART OF 14) (AC–DELCO #10117822)	93–02	F (M49)	1	10117822
18.	5–A16	4.383	CONE, 1ST GR SYN OTR (PART OF 14) (AC–DELCO #10117821)	93–02	F (M49)	2	10117821
	5–A16	4.383	CONE, 2ND GR SYN OTR (PART OF 14) (AC–DELCO #10117821)	93–02	F (M49)	2	10117821
19.	5–A16	4.383	RING, 1ST GR BLOCKING (PART OF 14) (AC–DELCO #10117820)	93–02	F (M49)	1	10117820
	5–A16	4.383	RING, 2ND GR BLOCKING (PART OF 14) (AC–DELCO #10117820)	93–02	F (M49)	1	10117820
20.	5–A17	4.419	SLEEVE, 1ST SPD GR (INCLS BRG) (INCL 21)	93–02	F (M49)	1	12541284
21.		N.S.	BEARING, 1ST GR (PART OF 20)				
22.	5–A17	4.417	GEAR, 1ST (34 TEETH)	93–02	F (M49)	1	12520787

cardiagn.com

23.	5–A17	4.422	**BEARING**, CNTR GR FRT (INCL 24) (INCLS CUP & CONE) (25877–25821) (TIMKEN) (4.408)	93–02	F (M49)	1	9431708
24.		N.S.	**RACE**, MAINSHAFT REAR BEARING (PART OF 23)				
25.	5–A17	4.415	**GEAR**, 5TH (DRVN) (23 TEETH) (AC–DELCO #10048981)	93–02	F (M49)	1	10048981
26.	5–A17	4.416	**RING**, 5TH GR RET	93–02	F (M49)	1	14058965
27.	5–A15	4.343	**GEAR**, SPEEDO SEN (17 TEETH) (AC–DELCO #12524068) (ON 93–94 VEHS, REPL SPEEDO DRVN GR W/12550928)	93–95	F (M49)	1	12524068
	5–A15	4.343	**GEAR**, SPEEDO SEN (17 TEETH) (4.337) (AC–DELCO #12530271)	96–02	F (M49)	1	12530271
28.	5–A15	4.345	**CLIP**, SPEEDO DRV GR (AC–DELCO #6261781)	93–95	F (M49)	1	6261781
		N.S.	**CLIP**, SPEEDO DRV GR (NOT REQD AFTER 1995)				
29.	5–A15	4.355	**BEARING**, INPUT SHF THR	93–02	F (M49)	1	9439888
30.	5–A15	4.353	**RACE**, INPUT SHF THR BRG (INCL 31 THRU 34) (4.355)	93–02	F (M49)	1	9439887
31.	5–A16	4.383	**RING**, 4TH GR BLOCKING (3RD & 4TH) (AC–DELCO #12520570)	93–02	F (M49)	2	12520570
32.		N.S.	**HUB**, 3–4 SYN (PART OF 34)				
33.	5–A17	4.416	**KEY**, 3RD & 4TH GR (SPD) (PART 34) (NO WINGED FLANGES ON SIDES OF KEY) (4.384)	93–02	F (M49)	6	14050745
	5–A17	4.416	**KEY**, 3RD & 4TH GR (SPD) (PART 34) (WINGED FLANGES ON SIDES OF KEY) (4.384)	93–02	F (M49)	6	14083521
34.	5–A16	4.380	**SYNCHRONIZER**, 3RD & 4TH GR (INCLS 15, 32, 33) (AC–DELCO #10147963)	93–02	F (M49)	1	10147963
35.	5–A17	4.415	**GEAR**, 3RD (29 TEETH)	93–02	F (M49)	1	12520789
36.	5–A15	4.355	**BEARING**, 3RD GR (DOUBLE SPLIT CAGE) (4.415)	93–02	F (M49)	1	9442336
37.	5–A17	4.416	**SPACER**, 3RD GR BRG RLR (4.415) (AC–DELCO #10117830)	93–02	F (M49)	1	10117830
38.	5–A16	4.398	**RING**, 2ND GR THR WA RET	93–02	F (M49)	1	12515768
39.	5–A16	4.398	**WASHER**, 2ND GR THR (I/D 1.265 O/D 1.93) (AC–DELCO #10117829)	93–02	F (M49)	1	10117829
40.	5–A16	4.395	**GEAR**, 2ND (37 TEETH)	93–02	F (M49)	1	12520788
41.	5–A15	4.355	**BEARING**, 2ND GR (4.398) (AC–DELCO #9442338)	93–02	F (M49)	1	9442338
42.	5–A16	4.398	**SPACER**, 2ND GR BRG RLR (AC–DELCO #10117826)	93–02	F (M49)	1	10117826
43.		N.S.	**RING**, SPRIAL RETAINING – 2ND SYN (PART OF 14)				
44.	5–A17	4.416	**WASHER**, 1ST GR THR (PART OF 14) (I/D 1.45 O/D 1.93) (4.419) (AC–DELCO #10117823)	93–02	F (M49)	1	10117823
45.	5–A16	4.384	**INSERT**, 1ST & 2ND GR SYN (PART OF 14)	93–02	F (M49)	3	10148054
46.	5–A17	4.419	**PIN KIT**, 1ST GR BRG RACE LOC (PART OF 14) (INCL 48) (INCLS BALL, INST SHT & PIN)	93–02	F (M49)	1	12545941

cardiagn.com

47.		N.S.	**SPRING**, ANTI-RATTLE (PART OF 14)				
48.		N.S.	**BALL**, ANTI-RATTLE (PART OF 46)				
49.		N.S.	**O-RING**, BEARING RACE (PART OF 51)				
50.		N.S.	**RACE**, FRONT COUNTERSHAFT BEARING (PART OF 51)				
51.	5-A17	4.422	**BEARING**, CTSHF FRT (INCL 49, 50) (AC-DELCO #S1285)	93-02	F (M49)	1	12333984
	5-A17	4.422	**BEARING**, CNTR GR RR (RLR) (INCLS 53) (INCLS CUP & CONE) (6.311) (AC-DELCO #S6)	93-02	F (M49)	2	457196
52.	5-A17	4.421	**GEAR**, CNTR	93-95	F (M49)	1	12520795
	5-A17	4.421	**GEAR**, CNTR	96-02	F (M49)	1	12531194
53.		N.S.	**RACE**, REAR COUNTERSHAFT (PART OF 51)				
54.	5-A19	4.426	**SHIM**, CNTR GR RR BRG (.1005) (AC-DELCO #10117781)	93-02	F (M49)	1	10117781
	5-A19	4.426	**SHIM**, CNTR GR RR BRG (.102) (AC-DELCO #10117782)	93-02	F (M49)	1	10117782
	5-A19	4.426	**SHIM**, CNTR GR RR BRG (.1035) (AC-DELCO #10117783)	93-02	F (M49)	1	10117783
	5-A19	4.426	**SHIM**, CNTR GR RR BRG (.105) (AC-DELCO #10117784)	93-02	F (M49)	1	10117784
	5-A19	4.426	**SHIM**, CNTR GR RR BRG (.1065) (AC-DELCO #10117785)	93-02	F (M49)	1	10117785
	5-A19	4.426	**SHIM**, CNTR GR RR BRG (.108) (AC-DELCO #10117786)	93-02	F (M49)	1	10117786
	5-A19	4.426	**SHIM**, CNTR GR RR BRG (.1095) (AC-DELCO #10117787)	93-02	F (M49)	1	10117787
	5-A19	4.426	**SHIM**, CNTR GR RR BRG (.111) (AC-DELCO #10117788)	93-02	F (M49)	1	10117788
	5-A19	4.426	**SHIM**, CNTR GR RR BRG (.1125) (AC-DELCO #10117789)	93-02	F (M49)	1	10117789
	5-A19	4.426	**SHIM**, CNTR GR RR BRG (.114) (AC-DELCO #10117790)	93-02	F (M49)	1	10117790
	5-A19	4.426	**SHIM**, CNTR GR RR BRG (.1155) (AC-DELCO #10117791)	93-02	F (M49)	1	10117791
	5-A19	4.426	**SHIM**, CNTR GR RR BRG (.117) (AC-DELCO #10117792)	93-02	F (M49)	1	10117792
	5-A19	4.426	**SHIM**, CNTR GR RR BRG (.1185) (AC-DELCO #10117793)	93-02	F (M49)	1	10117793
	5-A19	4.426	**SHIM**, CNTR GR RR BRG (.120) (AC-DELCO #10117794)	93-02	F (M49)	1	10117794
	5-A19	4.426	**SHIM**, CNTR GR RR BRG (.1215) (AC-DELCO #10117795)	93-02	F (M49)	1	10117795
	5-A19	4.426	**SHIM**, CNTR GR RR BRG (.123) (AC-DELCO #10117796)	93-02	F (M49)	1	10117796
	5-A19	4.426	**SHIM**, CNTR GR RR BRG (.1245) (AC-DELCO #10117797)	93-02	F (M49)	1	10117797
	5-A19	4.426	**SHIM**, CNTR GR RR BRG (.126) (AC-DELCO #10117798)	93-02	F (M49)	1	10117798
	5-A19	4.426	**SHIM**, CNTR GR RR BRG (.1275) (AC-DELCO #10117799)	93-02	F (M49)	1	10117799
	5-A19	4.426	**SHIM**, CNTR GR RR BRG (.129) (AC-DELCO #10117800)	93-02	F (M49)	1	10117800

cardiagn.com

	5-A19	4.426	SHIM, CNTR GR RR BRG (.1305) (AC-DELCO #10117801)	93-02	F (M49)	1	10117801
	5-A19	4.426	SHIM, CNTR GR RR BRG (.132) (AC-DELCO #10117802)	93-02	F (M49)	1	10117802
	5-A19	4.426	SHIM, CNTR GR RR BRG (.1335) (AC-DELCO #10117803)	93-02	F (M49)	1	10117803
	5-A19	4.426	SHIM, CNTR GR RR BRG (.135) (AC-DELCO #10117804)	93-95	F (M49)	1	10117804
	5-A19	4.426	SHIM, CNTR GR RR BRG (.1365) (AC-DELCO #10117805)	93-02	F (M49)	1	10117805
	5-A19	4.426	SHIM, CNTR GR RR BRG (.138) (AC-DELCO #10117806)	93-02	F (M49)	1	10117806
	5-A19	4.426	SHIM, CNTR GR RR BRG (.1395) (AC-DELCO #10117807)	93-02	F (M49)	1	10117807
	5-A19	4.426	SHIM, CNTR GR RR BRG (.141) (AC-DELCO #10117808)	93-02	F (M49)	1	10117808
	5-A19	4.426	SHIM, CNTR GR RR BRG (.1425) (AC-DELCO #10117809)	93-02	F (M49)	1	10117809
	5-A19	4.426	SHIM, CNTR GR RR BRG (.144) (AC-DELCO #10117810)	93-02	F (M49)	1	10117810
	5-A19	4.426	SHIM, CNTR GR RR BRG (.1455) (AC-DELCO #10117811)	93-02	F (M49)	1	10117811
	5-A19	4.426	SHIM, CNTR GR RR BRG (.147) (AC-DELCO #10117812)	93-02	F (M49)	1	10117812
	5-A19	4.426	SHIM, CNTR GR RR BRG (.1485) (AC-DELCO #10117813)	93-02	F (M49)	1	10117813
	5-A19	4.426	SHIM, CNTR GR RR BRG (.150) (AC-DELCO #10117814)	93-02	F (M49)	1	10117814
	5-A19	4.426	SHIM, CNTR GR RR BRG (.1515) (AC-DELCO #10117815)	93-02	F (M49)	1	10117815
	5-A19	4.426	SHIM, CNTR GR RR BRG (.1530) (AC-DELCO #10117816)	93-02	F (M49)	1	10117816
55.	5-A17	4.422	RETAINER, CNTR GR RR BRG (4.426) (AC-DELCO #10117817)	93-02	F (M49)	1	10117817
56.		N.S.	BOLT, CNTRSHAFT RET		.....		
57.	5-A17	4.415	GEAR, 5TH (53 TEETH) (AC-DELCO #10117836)	93-95	F (M49)	1	10117836
	5-A17	4.415	GEAR, 5TH (53 TEETH)	96-02	F (M49)	1	12530269
58.	5-A16	4.383	RING, 5TH GR BLOCKING	93-02	F (M49)	1	14053315
59.	5-A16	4.384	SPRING, 5TH GR SYN (PART OF 62)	93-02	F (M49)	2	14053317
60.		N.S.	HUB, 5TH SYN (PART OF 62)		.....		
61.	5-A17	4.416	KEY, 3RD & 4TH GR (SPD) (PART OF 62) (NO WINGED FLANGES ON SIDES OF KEY) (4.384)	93-02	F (M49)	6	14050745
	5-A17	4.416	KEY, 3RD & 4TH GR (SPD) (PART OF 62) (WINGED FLANGES ON SIDES OF KEY) (4.384)	93-02	F (M49)	6	14083521
62.	5-A16	4.380	SYNCHRONIZER, 5TH GR (INCLS 59, 60, 61)	93-95	F (M49)	1	12520791
	5-A16	4.380	SYNCHRONIZER, 5TH GR (INCLS 59, 60, 61)	96-02	F (M49)	1	12530270
63.	5-A16	4.383	RETAINER, 5TH GR SYN INS (AC-DELCO #10117842)	93-02	F (M49)	1	10117842
64.	5-A16	4.384	RING, 5TH GR SYN RET (.89 ID) (5.489)	93-02	F (M49)	1	2468937
65.	5-A13	4.133	TUBE, TRANS FLUID FIL (4.349) .	93-02	F (M49)	1	10065242

cardiagn.com

66.		8.971	PLUG, SQ HD FILL & DRN .500-14 PL	93-02		AR	444746
67.	5-A13	4.103	CASE, TRANS	93-95	F (M49)	1	12520764
	5-A13	4.103	CASE, TRANS	96-02	F (M49)	1	12530262
68.	5-A14	4.311	SPRING, REV SHFT STOP	96-02	F (M49)	1	12530266
	5-A14	4.311	SPRING, REV SHFT STOP (LK)	93-95	F (M49)	1	14053308
69.	5-A20	4.435	RING, REV IDLER GR RET (0 RING) (AC-DELCO #14071775)	93-02	F (M49)	1	14071775
70.	5-A20	4.430	GEAR, REV IDLER (20 TEETH)	93-02	F (M49)	1	12530263
71.		N.S.	PIN, ROLL - REVERSE IDLER				
72.	5-A20	4.433	SHAFT, REV IDLER GR	93-02	F (M49)	1	14050753
73.	5-A13	4.303	FORK, 5TH SHFT (AC-DELCO #12540395)	93-02	F (M49)	1	12540395
74.		8.040	PIN, SPRING, SLOTTED 3/16"X1", ZINC (AC-DELCO #9421202)	93-02		AR	9421202
75.	5-A13	4.309	SHAFT, 5TH & REV SHFT	93-02	F (M49)	1	15546828
76.	5-A20	4.435	RING, 5TH & REV RLY LVR RET	93-02	F (M49)	1	9439937
77.	5-A13	4.302	LEVER, 5TH & REV RLY	93-95	F (M49)	1	14069816
	5-A13	4.302	LEVER, 5TH & REV RLY	96-02	F (M49)	1	12530267
78.	5-A13	4.307	PIN, 5TH & REV RLY LVR PIV	93-02	F (M49)	1	15546830
79.	5-N27	2.698	SWITCH, B/U LP (M16X1.5 THD)	93-02	F (M49)	1	14069600
	5-N27	2.698	CONNECTOR, SW-B/U LP (BLACK) (2-WAY M) (W/LEADS) (2.535) (AC-DELCO #PT107)	93-02	F	1	12085485
80.	5-A11	4.004	CONTROL, M/TRNS (W/O SHFT PATT)	93-02	F (M49)	1	12520793
81.	5-A13	4.307	SLEEVE, SHFT LVR DPNR	93-02	F (M49)	1	14105942
82.	5-A13	4.302	LEVER, OFFSET SHFT	93-02	F (M49)	1	14050767
83.		8.940	PIN, SPRING, SLOTTED 3/16"X1", ZINC (AC-DELCO #9421202)	93-02		AR	9421202
84.	5-A14	4.311	SPRING, SHFT DTNT BALL	93-02	F (M49)	1	14050769
85.		8.899	BALL, 3/8 STEEL (AC-DELCO #7826284)	93-02		AR	7826284
86.	5-A13	4.104	VENT, M/TRNS (EXT) (L-SHAPED)	93-95	F (M49)	1	12521722
	5-A13	4.104	TUBE, M/TRNS VENT (EXT) (L-SHAPED)	96-02	F (M49)	1	12521722
87.	5-A13	4.104	PIPE, TRANS VENT	93-02	F (M49)	1	10079892
	5-A13	4.104	VENT, TRANS (VENT TUBE) (STRAIGHT) (1.25" LG-STRAIGHT) (W/O HOSE) (5.387) (AC-DELCO #8640496)	93-01	F (M49)	1	8640496
	5-A13	4.104	VENT, TRANS (VENT TUBE) (STRAIGHT) (AC-DELCO #15771000)	02	F (M49)	1	15771000
88.	5-B12	4.318	SEAL, MAIN SHF (HAS DBL LIP DES, INCLS BOOT) (AC-DELCO #10117848)	93	F	1	10117848
	5-A14	4.318	SEAL, MAIN SHF (EXT OIL) (AC-DELCO #361165)	93-02	F (M49)	1	361165
89.		N.S.	BUSHING, EXT HSG (PART OF 90)				
90.	5-A14	4.317	EXTENSION, TRANS (INCL 89) (W/BUSH) (AC-DELCO #12520808)	93-95	F (M49)	1	12520808

cardiagn.com

	5-A14	4.317	EXTENSION, TRANS (INCL 89) ..	96-02	F (M49)	1	12530272
91.		8.900	BOLT, HFH M10X1.5X30 10.9 FL BLK 21.5 OD 26MM THD POINTED	93-02	.....	AR	12337993
92.		8.900	BOLT-HEX, M8X1.25X20, 16.98 THD, GM500 (10.9), PZOR, MACH (AC-DELCO #11508687)	93-02	.....	AR	11508687
93.	5-A15	4.356	RETAINER, TRANS MAIN DRV GR BRG (AC-DELCO #14069863)	93-95	F (M49)	1	14069863
	5-A15	4.356	RETAINER, TRANS MAIN DRV GR BRG (4.353)	96-02	F (M49)	1	12530268
94.	5-A15	4.354	SEAL, INPUT SHF	93-02	F (M49)	1	15635337
95.	5-A17	4.422	SHIM, CNTR GR BRG (.014 THK) (4.376)	93-02	F (M49)	AR	14050780
	5-A17	4.422	SHIM, CNTR GR BRG (.016 THK) (4.376)	93-02	F (M49)	AR	14050781
	5-A17	4.422	SHIM, CNTR GR BRG (.018 THK) (4.376)	93-02	F (M49)	AR	14050782
	5-A17	4.422	SHIM, CNTR GR BRG (.012 THK) (4.376)	93-02	F (M49)	AR	14050783
	5-A17	4.422	SHIM, CNTR GR BRG (.036 THK) (4.376)	93-02	F (M49)	AR	14050785
	5-A17	4.422	SHIM, CNTR GR BRG (.022 THK) (4.376)	93-02	F (M49)	AR	14050786
	5-A17	4.422	SHIM, CNTR GR BRG (.023 THK) (4.376)	93-02	F (M49)	AR	14050787
	5-A17	4.422	SHIM, CNTR GR BRG (.024 THK) (4.376) (AC-DELCO #14069868)	93-02	F (M49)	AR	14069868
	5-A17	4.422	SHIM, CNTR GR BRG (.025 THK) (4.376) (AC-DELCO #14069869)	93-02	F (M49)	AR	14069869
	5-A17	4.422	SHIM, CNTR GR BRG (.026 THK) (4.376) (AC-DELCO #14069870)	93-02	F (M49)	AR	14069870
	5-A17	4.422	SHIM, CNTR GR BRG (.027 THK) (4.376) (AC-DELCO #14069871)	93-02	F (M49)	AR	14069871
	5-A17	4.422	SHIM, CNTR GR BRG (.028 THK) (4.376) (AC-DELCO #14069872)	93-02	F (M49)	AR	14069872
	5-A17	4.422	SHIM, CNTR GR BRG (.029 THK) (4.376) (AC-DELCO #14069873)	93-02	F (M49)	AR	14069873
	5-A17	4.422	SHIM, CNTR GR BRG (.030 THK) (4.376) (AC-DELCO #14069874)	93-02	F (M49)	AR	14069874
	5-A17	4.422	SHIM, CNTR GR BRG (.031 THK) (4.376) (AC-DELCO #14069875)	93-02	F (M49)	AR	14069875
	5-A17	4.422	SHIM, CNTR GR BRG (.032 THK) (4.376) (AC-DELCO #14069876)	93-02	F (M49)	AR	14069876
	5-A17	4.422	SHIM, CNTR GR BRG (.033 THK) (4.376) (AC-DELCO #14069877)	93-02	F (M49)	AR	14069877
	5-A17	4.422	SHIM, CNTR GR BRG (.034 THK) (4.376) (AC-DELCO #14069878)	93-02	F (M49)	AR	14069878
	5-A17	4.422	SHIM, CNTR GR BRG (.035 THK) (4.376) (AC-DELCO #14069879)	93-02	F (M49)	AR	14069879
	5-A17	4.422	SHIM, CNTR GR BRG (.037 THK) (4.376) (AC-DELCO #14069880)	93-02	F (M49)	AR	14069880
	5-A17	4.422	SHIM, CNTR GR BRG (.038 THK) (4.376) (AC-DELCO #14069881)	93-02	F (M49)	AR	14069881
	5-A17	4.422	SHIM, CNTR GR BRG (.039 THK) (4.376) (AC-DELCO #14069882)	93-02	F (M49)	AR	14069882

cardiagn.com

	5-A17	4.422	**SHIM**, CNTR GR BRG (.040 THK) (4.376) (AC-DELCO #14069883)	93-02	F (M49)	AR	14069883
	5-A17	4.422	**SHIM**, CNTR GR BRG (MAIN DR) (.020 THK) (4.376)	93-02	F (M49)	AR	14050784
96.	5-A15	4.355	**BEARING**, MAIN DRV GR (INCLS CUP&CONE) (1 3/8 ID X 2 9/16 OD X 23/32 THK) (TIMKEN) (6.311) (AC-DELCO #S8)	93-02	F (M49)	1	457052
97.	5-A15	4.351	**SHAFT**, INPUT	93-02	F (M49)	1	12520790
98.	5-A15	4.352	**ROLLER**, MAIN SHF FRT BRG (4.520)	93-02	F (M49)	15	9419284
99.	5-A11	4.015	**BOOT**, TRANS SHFT LVR (TO CONT HSG ON TRANS)	93-02	F (M49)	1	12542549
100.	5-A11	4.015	**RETAINER**, M/TRNS CONT LVR LWR BOOT	93-02	F (M49)	1	12521677
101.	5-A13	4.309	**SPACER**, INPUT SHF BRG	93-02	F (M49)	1	12542544
102.	5-A13	4.303	**FORK**, REV SHFT	93-95	F (M49)	1	10048957
	5-A13	4.303	**FORK**, REV SHFT (AC-DELCO #12530264)	96-02	F (M49)	1	12530264
110.	5-A11	4.003	**TRANSMISSION**, MAN	96-02	F (M49)	1	10232236
	5-A11	4.003	**TRANSMISSION**, MAN (WHEN USING IN PLC OF 10142016, ALSO USE SPEEDO GEAR 12550928)	93-95	F (M49)	1	12533893

RPO DEFINITIONS
M49 – TRANSMISSION MAN 5 SPD, BORG WARNER, 77MM, 3.75 1ST, .76 5TH, O/D

cardiagn.com

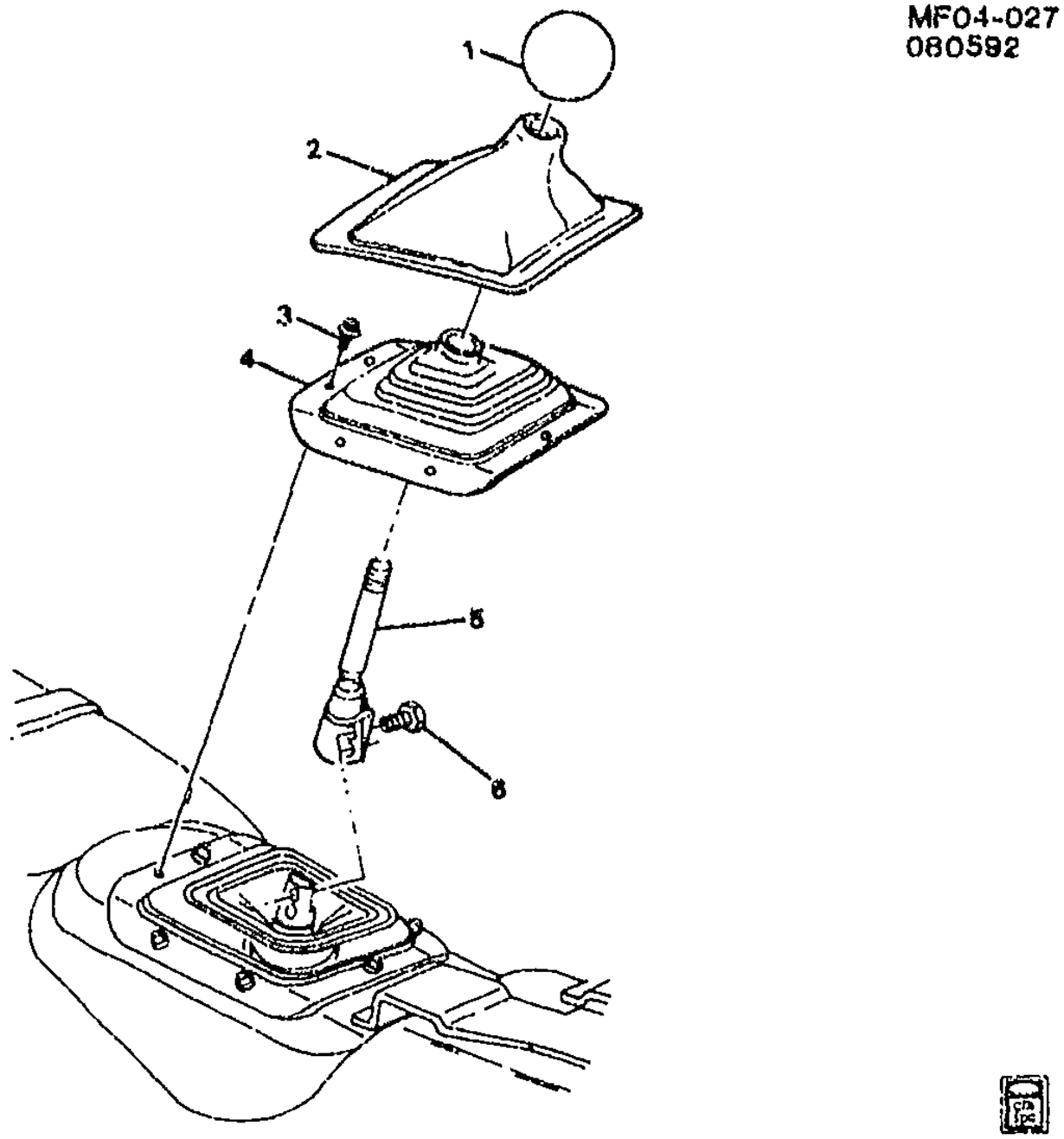

MF04-027

1993 F SHIFT CONTROLS/MANUAL TRANSMISSION (M28,M29)
1994-2002 F SHIFT CONTROLS/MANUAL TRANSMISSION (MM6)

1.	5-A11	4.006	KNOB, M/TRNS CONT LVR (W/O SHFT PATT) (BLACK) (PLASTIC) .	93-98	F (NK3)	1	10150052
	5-A11	4.006	KNOB, M/TRNS CONT LVR (W/O SHFT PATT) (BLACK) (LEATHER)	93-98	F (NP5)	1	14089466
	5-A11	4.006	KNOB, M/TRNS CONT LVR (W/O SHFT PATT) (BLACK) (PLASTIC) .	99	F (NK3) (EXC BBS)	1	10150052
	5-A11	4.006	KNOB, M/TRNS CONT LVR (W/O SHFT PATT) (BLACK) (LEATHER)	99	F (NP5)	1	12562940
	5-B6	4.006	KNOB, M/TRNS CONT LVR (W/O SHFT PATT) (BLACK)	99-02	F (MM6, BBS)	1	12562942
	5-A11	4.006	KNOB, M/TRNS CONT LVR (W/O SHFT PATT) (BLACK) (LEATHER)	99	F (NP5) (EXC BBS)	1	14089466
	5-A11	4.006	KNOB, M/TRNS CONT LVR (W/O SHFT PATT) (BLACK)	00-02	F (MM6, NK3) (EXC BBS)	1	12562939
	5-A11	4.006	KNOB, M/TRNS CONT LVR (W/O SHFT PATT) (BLACK) (LEATHER)	00-02	F (MM6, M49, NP5) (EXC BBS)	1	12562940
	5-A11	4.006	KNOB, M/TRNS CONT LVR (W/O SHFT PATT) (BLACK) (LEATHER)	02	F (MM6, NP5) (EXC BBS)	1	12562940
2.	5-A11	4.015	BOOT, M/TRNS CONT LVR (ATCH TO CNSL TRIM PLT)	93-96	F	1	17997785

cardiagn.com

			(GRAY) (ATCH TO CNSL TRIM PLATE)				
3.		8.900	BOLT/SCREW, HWH W/FL WA M4.2X1.41X20, 6010M, 7253M, 12.5 OD, DOG PT (M/TRNS CONT LVR) (3.977)	93–02	.....	7	11509709
4.	5–B7	4.015	BOOT, M/TRNS CONT LVR (BOLTS TO UNDERBODY) (RUBBER)	93–02	F	1	10267518
5.	5–B6	4.006	HANDLE, M/TRNS CONT LVR REL	93	F (M28, M29)	1	10215351
	5–B6	4.006	HANDLE, M/TRNS CONT LVR REL	94–02	F (MM6)	1	10215351
6.		8.900	BOLT, HVY HEX HD) (M8X1.25X12 10.9 ZE) (M/TRNS CONT LVR)	93–02	.....	2	11515754

RPO DEFINITIONS
BBS – KNOB SHIFTER HURST
MM6 – TRANSMISSION MAN 6 SPD, BORG WARNER, 85MM, 1ST 2.66, 6TH 0.50, O/D
M28 – TRANSMISSION MAN, 6 SPD, BORG WARNER, 85MM, 3.36 1ST, 1.35 3RD
M29 – TRANSMISSION MAN, 6 SPD, BORG WARNER, 85MM, 2.97 1ST, 1.44 3RD
M49 – TRANSMISSION MAN 5 SPD, BORG WARNER, 77MM, 3.75 1ST, .76 5TH, O/D
NK3 – STEERING WHEEL,SPORT,SOFT RIM,SIMULATED LEATHER
NP5 – STEERING WHEEL,LEATHER WRAPPED

cardiagn.com

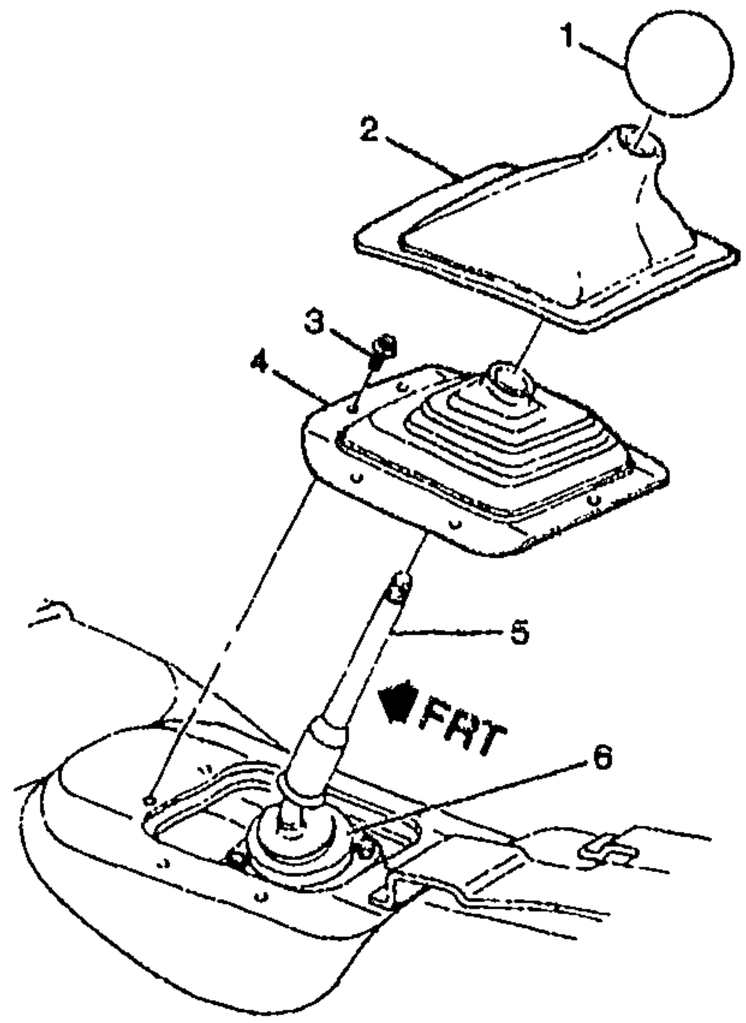

MF04-017

1993-2002 F SHIFT CONTROLS/MANUAL TRANSMISSION (M49)

1.	5-A11	4.006	KNOB, M/TRNS CONT LVR (W/O SHFT PATT) (BLACK) (LEATHER)	93-98	F (NP5)	1	14089466
	5-A11	4.006	KNOB, M/TRNS CONT LVR (W/O SHFT PATT) (BLACK) (PLASTIC)	93-98	F (NK3)	1	10150052
	5-A11	4.006	KNOB, M/TRNS CONT LVR (W/O SHFT PATT) (BLACK) (PLASTIC)	99	F (NK3) (EXC BBS)	1	10150052
	5-A11	4.006	KNOB, M/TRNS CONT LVR (W/O SHFT PATT) (BLACK) (LEATHER)	99	F (NP5)	1	12562940
	5-A11	4.006	KNOB, M/TRNS CONT LVR (W/O SHFT PATT) (BLACK) (LEATHER)	99	F (NP5) (EXC BBS)	1	14089466
	5-A11	4.006	KNOB, M/TRNS CONT LVR (W/O SHFT PATT) (BLACK)	00-02	F (NK3, M49) (EXC BBS)	1	12562939
	5-A11	4.006	KNOB, M/TRNS CONT LVR (W/O SHFT PATT) (BLACK) (LEATHER)	00-02	F (MM6, M49, NP5) (EXC BBS)	1	12562940
	5-A11	4.006	KNOB, M/TRNS CONT LVR (W/O SHFT PATT) (BLACK)	02	F (M49, NK3) (EXC BBS)	1	12562939
	5-A11	4.006	KNOB, M/TRNS CONT LVR (W/O SHFT PATT) (BLACK) (LEATHER)	02	F (M49, NP5) (EXC BBS)	1	12562940
2.	5-A11	4.015	BOOT, M/TRNS CONT LVR (ATCH TO CNSL TRIM PLT)	93-96	F (M49)		17997785
	5-A11	4.015	BOOT, M/TRNS CONT LVR (GRAY) (ATCH TO CNSL TRIM PLATE)	97-02	F (M49)	1	10271369
3.		8.900	BOLT/SCREW, HWH W/FL WA M4.2X1.41X20, 6010M, 7253M, 12.5 OD, DOG PT (M/TRNS CONT LVR) (8.977)	93-02	F	7	11509709
4.	5-A11	4.015	BOOT, M/TRNS CONT LVR (LWR, ATCH TO FLR)	93-02	F	1	10267519

cardiagn.com

							MP04-017
5.	5-A11	4.004	CONTROL, M/TRNS (W/O SHFT PATT) (SEE "MANUAL TRANS" ILLUSTRATION IN GRP. 4.000 FOR DETAILED VIEW.)	93-02	F (M49)	1	12520793
6.	5-A11	4.015	BOOT, M/TRNS CONT LVR (TO CONT HSG ON TRANS)	93-02	F (M49)	1	12542549

RPO DEFINITIONS

BBS – KNOB SHIFTER HURST
MM6 – TRANSMISSION MAN 6 SPD, BORG WARNER, 85MM, 1ST 2.66, 6TH 0.50, O/D
M49 – TRANSMISSION MAN 5 SPD, BORG WARNER, 77MM, 3.75 1ST, .76 5TH, O/D
NK3 – STEERING WHEEL,SPORT,SOFT RIM,SIMULATED LEATHER
NP5 – STEERING WHEEL,LEATHER WRAPPED

cardiagn.com

ILLUSTRATION INDEX

	TITLE	GRID
1993	F 6-SPEED MANUAL TRANSMISSION ASSEMBLY(M28,M29)	5-D5
1994-2002	F 6-SPEED MANUAL TRANSMISSION ASSEMBLY(MM6)	5-D13
1993	F SHIFT CONTROLS/MANUAL TRANSMISSION (M28,M29)	5-D22
1994-2002	F SHIFT CONTROLS/MANUAL TRANSMISSION (MM6)	5-D22
1993-2002	F SHIFT CONTROLS/MANUAL TRANSMISSION (M49)	5-D24

cardiagn.com

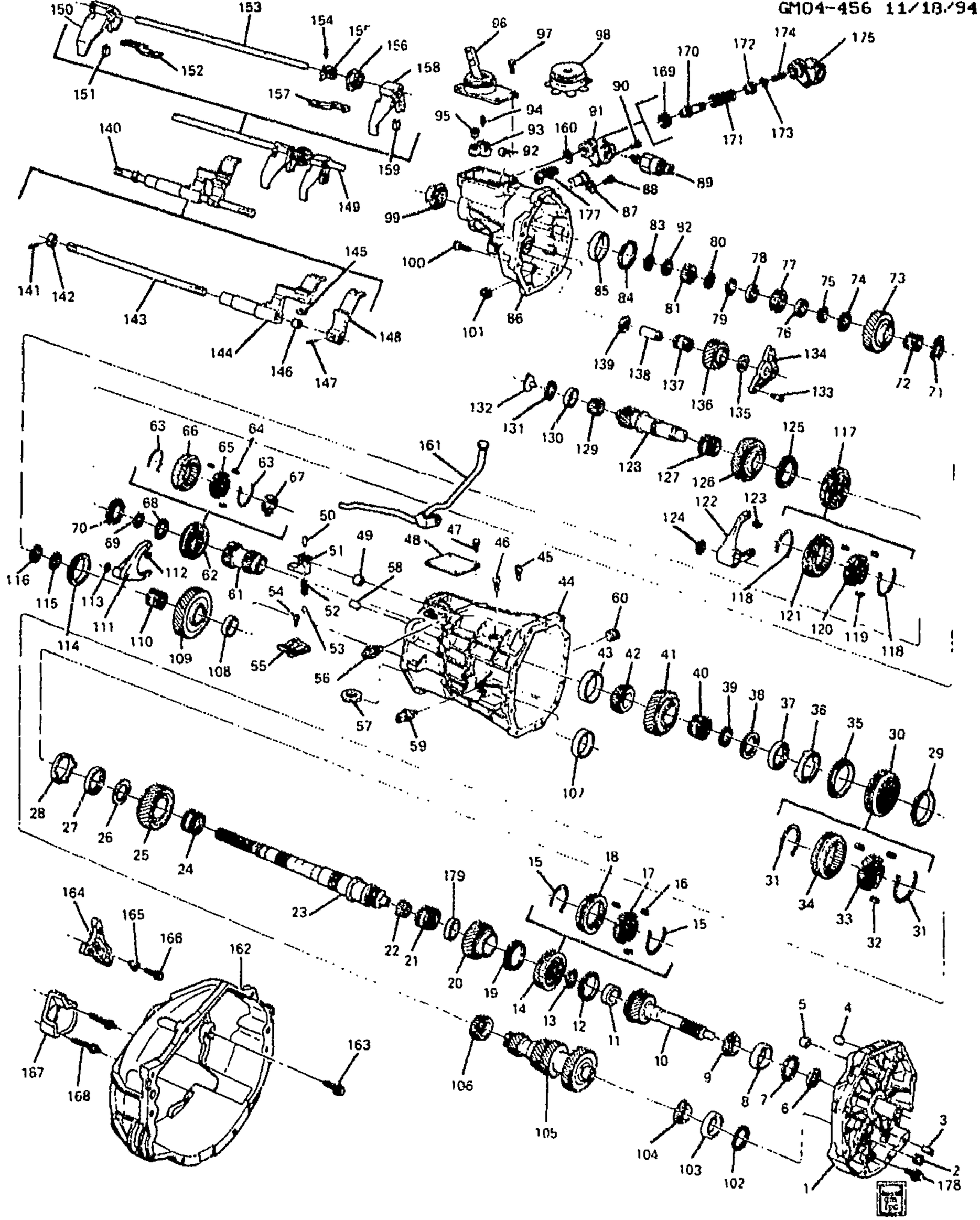

cardiagn.com

1993 F 6-SPEED MANUAL TRANSMISSION ASSEMBLY(M28,M29)

1.	5-B8	4.083	PLATE, TRANS FRT ADAP	93	F (M28, M29)	1	12523036
2.	5-B9	4.104	PLUG, TRANS FRT ADAPT INSP (8.971)	93	F (M28, M29)	1	12387621
3.	5-N27	0.685	PIN, CLU HSG LOC (4.105)	93	F (M28, M29)	2	12523217
4.	5-B9	4.104	PIN, TRANS CASE LOC (DOWEL) (0.685)	93	F (M28, M29)	2	12523068
5.	5-B11	4.309	BUSHING, TOP SHFT RL	93	F (M28, M29)	1	12523001
6.	5-B13	4.354	SEAL, INPUT SHF	93	F (M28, M29)	1	15635337
7.	5-B14	4.376	SHIM, INPUT SHF BRG (.022MM)	93	F (M28, M29)	AR	12523218
	5-B14	4.376	SHIM, INPUT SHF BRG (.026MM)	93	F (M28, M29)	AR	12523220
	5-B14	4.376	SHIM, INPUT SHF BRG (.028MM)	93	F (M28, M29)	AR	12523221
	5-B14	4.376	SHIM, INPUT SHF BRG (.030MM)	93	F (M28, M29)	AR	12523222
	5-B14	4.376	SHIM, INPUT SHF BRG (.032MM)	93	F (M28, M29)	AR	12523223
	5-B14	4.376	SHIM, INPUT SHF BRG (.034MM)	93	F (M28, M29)	AR	12523224
	5-B14	4.376	SHIM, INPUT SHF BRG (.036MM)	93	F (M28, M29)	AR	12523225
	5-B14	4.376	SHIM, INPUT SHF BRG (.038MM)	93	F (M28, M29)	AR	12523226
	5-B14	4.376	SHIM, INPUT SHF BRG (.040MM)	93	F (M28, M29)	AR	12523227
	5-B14	4.376	SHIM, INPUT SHF BRG (.042MM)	93	F (M28, M29)	1	12523228
	5-B14	4.376	SHIM, INPUT SHF BRG (.044MM)	93	F (M28, M29)	AR	12523229
	5-B14	4.376	SHIM, INPUT SHF BRG (.046MM)	93	F (M28, M29)	AR	12523230
	5-B14	4.376	SHIM, INPUT SHF BRG (.048MM)	93	F (M28, M29)	AR	12523231
	5-B14	4.376	SHIM, INPUT SHF BRG (.050MM)	93	F (M28, M29)	AR	12523232
8.		N.S.	RACE, INPUT SHAFT BEARING (PART OF 9)		.....		
9.	5-B13	4.355	BEARING, MAIN DRV GR (INCL 8)	93	F (M28, M29)	1	12523289
10.	5-B13	4.351	SHAFT, INPUT	93	F (M28, M29)	1	12523214
11.		N.S.	RACE, INPUT SHAFT BEARING (PART OF (*KIT1)		.....		
12.	5-B15	4.383	RING, 4TH GR BLOCKING (W/CARBON RINGS) (4.384)	93	F (M28, M29)	1	12523186
13.	5-B15	4.384	RING, TRANS SYN RET (1ST & 2ND GEAR) (4.318)	93	F (M28, M29)	1	12523187
14.	5-B14	4.380	SYNCHRONIZER, 3RD & 4TH GR (INCL 15 THRU 18)	93	F (M28, M29)	1	12523078
15.	5-B15	4.384	SPRING, SYN (3RD/4TH) (PART OF 14)	93	F (M28, M29)	2	12523185
16.	5-B15	4.384	INSERT, 3RD & 4TH GR SYN (PART OF 14) (WINGED FLANGES ON SIDES OF KEY) ...	93	F (M28, M29)	3	14083521
17.		N.S.	HUB, 3RD/4TH SYC (PART OF 14)		.....		
18.		N.S.	SLEEVE, 3RD/4TH SYC (PART OF 14)		.....		
19.	5-B15	4.383	RING, 3RD GR BLOCKING (W/CARBON RINGS) (4.384)	93	F (M28, M29)	1	12523186
20.	5-B16	4.415	GEAR, 3RD (BORG WARNER #13-86-083-005-E) (35 TEETH)	93	F (M28, M29)	1	12523075
	5-B16	4.415	GEAR, 3RD (BORG WARNER #13-86-083-006-E) (37 TEETH)	93	F (M28, M29)	1	12523076
21.	5-B13	4.355	BEARING, 3RD GR	93	F (M28, M29)	1	12523073
22.		N.S.	BEARING, MAINSHAFT SMALL TAPERED (*KIT1)		.....		
23.	5-B16	4.403	SHAFT, MAIN	93	F (M28, M29)	1	12523072

cardiagn.com

24.	5-B13	4.355	BEARING, 2ND GR	93	F (M28, M29)	1	12523073
25.	5-B15	4.395	GEAR, 2ND (BORG WARNER #13-86-082-004--E) (41 TEETH)	93	F (M28, M29)	1	12523189
	5-B16	4.395	GEAR, 2ND (BORG WARNER #13-86-082-005-E) (43 TEETH) (4.415)	93	F (M28, M29)	1	12523190
26.	5-B17	4.416	WASHER, 1ST GR THR	93	F (M28, M29)	2	12523198
27.	5-B15	4.383	CONE, TRANS SYN	93	F (M28, M29)	2	12523195
28.	5-B15	4.383	CONE, TRANS 1-2 SYN	93	F (M28, M29)	2	12523196
29.	5-B15	4.383	RING, SYN BLOCKING (2ND GEAR) (4.384)	93	F (M28, M29)	1	12523194
30.	5-B14	4.380	SYNCHRONIZER, 1ST & 2ND GR (4.423)	93	F (M28, M29)	1	12523191
31.	5-B15	4.384	SPRING, SYN (1ST/2ND) (PART OF 30)	93	F (M28, M29)	2	12523193
32.	5-B15	4.384	INSERT, 1ST & 2ND GR SYN (PART OF 30)	93	F (M28, M29)	3	12523192
33.		N.S.	HUB, 1ST/2ND SYN (PART OF 30)				
34.		N.S.	SLEEVE, 1ST/2ND SYN (PART OF 30)				
35.	5-B10	4.303	RING, 1ST GR BLOCKING (4.384)	93	F (M28, M29)	1	12523194
36.	5-B15	4.383	CONE, TRANS 1-2 SYN	93	F (M28, M29)	2	12523196
37.	5-B15	4.383	CONE, TRANS SYN	93	F (M28, M29)	2	12523195
38.	5-B17	4.416	WASHER, 1ST GR THR	93	F (M28, M29)	2	12523198
39.	5-B15	4.384	RING, TRANS SYN RET (1ST & 2ND GEAR) (4.318)	93	F (M28, M29)	1	12523187
40.	5-B13	4.355	BEARING, 1ST GR (4.383)	93	F (M28, M29)	1	12523188
41.	5-B17	4.417	GEAR, 1ST (TRANS MAIN SHF)	93	F (M28)	1	12523199
	5-B17	4.417	GEAR, 1ST (TRANS MAIN SHF)	93	F (M29)	1	12523200
42.	5-B16	4.408	BEARING, MAIN SHF RR (INCL 43) (W/TAPPERED ROLLERS)	93	F (M28, M29)	1	12523286
43.		N.S.	RACE, MAINSHAFT BEARING (PART OF 42)				
44.	5-B8	4.103	CASE, TRANS (INCL 57) (AC--DELCO #12523066)	93	F (M28, M29)	1	12523066
45.	5-B11	4.309	BOLT, REV SHFT SHF GDE	93	F (M28, M29)	1	12523213
46.	5-B11	4.309	BOLT, REV SHFT SHF GDE	93	F (M28, M29)	1	12523213
47.	5-B7	4.010	BOLT, M/TRNS CONT LVR HSG (M8X1.25X20) (4.012)	93	F (M28, M29)	4	15546805
48.	5-B9	4.105	PLATE, TRANS FRT SHIFTER CVR	93	F (M28, M29)	1	12523290
49.	5-B11	4.309	BUSHING, TOP SHFT RL	93	F (M28, M29)	1	12523001
50.	5-B10	4.307	PIN, 1ST & 2ND SHFT FORK (3/16 X 13/16 ROLL) (8.939)	93	F (M28, M29)	1	454512
51.	5-B9	4.302	LEVER, OFFSET SHFT (FRT) (FRT)	93	F (M28, M29)	1	12523241
52.	5-B11	4.311	SPRING, SHFT DTNT BALL	93	F (M28, M29)	1	12523242
53.		8.899	BALL, 3/8 STEEL (AC-DELCO #7826284)	93		AR	7826284
54.	5-B10	4.303	BOLT, SHFT GDE PLT	93	F (M28, M29)	2	12523243
55.	5-B11	4.311	PLATE, SHFT GDE DTNT	93	F (M28, M29)	1	12523236
56.	5-B11	4.311	DETENT, SHFT INTLK	93	F (M28, M29)	1	12527784
57.		N.S.	MAGNET, TRANS (PART OF 44)				

cardiagn.com

58.	5-B9	4.104	PIN, TRANS CASE FRT ADAP (0.685)	93	F (M28, M29)	2	12523068
59.	5-N27	2.698	SWITCH, B/U LP (M16X1.5 THD)	93	F (M28, M29)	1	14069600
60.	5-B9	4.104	PLUG, TRANS OIL FIL (8.971)	93	F (M28, M29)	1	12387621
61.	5-B16	4.415	GEAR, 5TH (DRVN)	93	F (M28, M29)	1	12523041
62.	5-B14	4.380	SYNCHRONIZER, REV GR (INCL 63 THRU 67)	93	F (M28, M29)	1	12523043
63.	5-B15	4.384	SPRING, SYN (REVERSE)	93	F (M28, M29)	2	12523251
64.	5-B15	4.384	KEY, 5TH & 6TH & REV SYN (WINGED FLANGES ON SIDES OF KEY)	93	F (M28, M29)	3	14083521
65.		N.S.	HUB, REV SYN (PART OF 62)				
66.		N.S.	SLEEVE, REV SYN (PART OF 62)				
67.	5-B15	4.384	RETAINER, REV GR SYN INSERT (PART OF 62)	93	F (M28, M29)	1	12523044
68.	5-B17	4.419	WASHER, REV GR THR	93	F (M28, M29)	1	12523047
69.	5-B15	4.384	RING, TRANS SYN RET (REVERSE) (4.318)	93	F (M28, M29)	1	12523253
70.	5-B15	4.383	RING, REV GR BLOCKING (4.384)	93	F (M28, M29)	1	12523049
71.	5-B17	4.419	WASHER, REV GR (LOCATED BETWEEN REV GR & SYNCHRO ASM)	93	F (M28, M29)	1	12523048
	5-B17	4.419	WASHER, REV GR (LOCATED BETWEEN REV GR & REAR MAINSHAFT)	93	F (M28, M29)	1	12523053
72.	5-B21	4.431	BEARING, REV GR	93	F (M28, M29)	1	12523050
73.	5-B17	4.417	GEAR, REV (TRANS MAIN SHF)	93	F (M28, M29)	1	12523052
74.	5-B17	4.419	WASHER, REV GR THR (LOCATED BETWEEN REV GR & REAR MAINSHAFT)	93	F (M28, M29)	1	12523053
75.	5-B15	4.384	RING, TRANS SYN RET (4.318)	93	F (M28, M29)	1	12523253
76.	5-B17	4.416	SPACER, MAIN SHF GR BRG	93	F (M28, M29)	1	12523056
77.		N.S.	BEARING, MAIN SHF RR (*KIT2)				
78.	5-B17	4.416	SPACER, MAIN SHF GR BRG	93	F (M28, M29)	1	12523056
79.	5-B16	4.412	RING, MAIN SHF RR BRG RET	93	F (M28, M29)	1	12523058
	5-B16	4.412	RING, MAIN SHF RR BRG RET (4.318)	93	F (M28, M29)	1	12523253
80.	5-B13	4.338	RING, SPEEDO DRV GR RET (4.416)	93	F (M28, M29)	1	14058965
81.	5-B13	4.343	GEAR, SPEEDO SEN (17 TEETH) (4.337) (AC-DELCO #12530271)	93	F (M29)	1	12530271
	5-B13	4.343	GEAR, SPEEDO SEN	93	F (M28) (EXPORT)	1	12523063
82.	5-B13	4.338	RING, SPEEDO DRV GR RET (4.416)	93	F (M28, M29)	1	14058965
83.	5-B17	4.416	SPACER, MAIN SHF GR BRG	93	F (M28, M29)	1	12523056
84.	5-B16	4.412	RING, MAIN SHF RR BRG RET	93	F (M28, M29)	1	12523058
	5-B16	4.412	RING, MAIN SHF RR BRG RET (4.318)	93	F (M28, M29)	1	12523253
85.		N.S.	RACE, MAINSHAFT BEARING (*KIT2)				
86.	5-B12	4.317	EXTENSION, TRANS (STAMPED 12523276)	93	F (M28, M29)	1	12523276
87.	5-B13	4.337	SENSOR, M/TRNS OUTPUT SPD (3.682)	93	F (LT1, M28, M29, GU2, GU5)	1	12523306
88.	5-B12	4.329	BOLT, VEH SPD SEN (M6X16) (9.8 7114M) (8.900)	93	F (M28, M29)	1	11516398

cardiagn.com

89.	5-B10	4.307	**SOLENOID**, REV LOCKOUT	93	F (M28, M29)	1	12523300
	5-B10	4.307	**SEAL**, REV LOCKOUT SOL (O RING)	93	F (M28, M29)	1	12523293
90.	5-B10	4.307	**BOLT**, REV LOCKOUT MTG	93	F (M28, M29)	1	12523302
91.	5-B10	4.307	**LOCKOUT**, REV (INCL 169 THRU 175)	93	F (M28, M29)	1	12523299
92.	5-B11	4.309	**BUSHING**, TOP SHFT RL	93	F (M28, M29)	1	12523001
93.	5-B9	4.302	**LEVER**, OFFSET SHFT	93	F (M28, M29)	1	12523298
94.	5-B9	4.302	**PIN**, OFFSET SHFT LVR (3/16 X 13/16 ROLL) (8.939)	93	F (M28, M29)	1	454512
95.		N.S.	**CUP**, ISOLATOR (PART OF 93) ...		.....		
96.	5-B6	4.004	**CONTROL**, TRANS SHFT	93	F (M28, M29)	1	12523303
97.	5-B7	4.010	**BOLT**, M/TRNS CONT LVR HSG (SHIFTER ASSY) (M8X1.25X20) (4.012)	93	F (M28, M29)	4	15546805
98.	5-B7	4.015	**BOOT**, M/TRNS CONT LVR (UPR CNSL) (BOLTS TO UNDERBODY) (RUBBER)	93	F (M28, M29)	1	10267518
99.	5-B12	4.318	**SEAL**, MAIN SHF (HAS DBL LIP DES, INCLS BOOT) (AC-DELCO #10117848)	93	F	1	10117848
	5-B12	4.318	**SEAL**, MAIN SHF (HAS TRIPLE LIP DES) (AC-DELCO #12530278)	93	F (M28, M29)	1	12530278
100.	5-B9	4.104	**BOLT**, TRANS CASE (EXTENSION HOUSING TO CASE) (M10X1.5-40MM) (0.683)	93	F (M28, M29)	8	12523235
101.	5-B9	4.104	**PLUG**, TRANS OIL DRN (8.971) ..	93	F (M28, M29)	1	12387621
102.	5-B14	4.376	**SHIM**, INPUT SHF BRG (.022MM)	93	F (M28, M29)	AR	12523218
	5-B14	4.376	**SHIM**, INPUT SHF BRG (.026MM)	93	F (M28, M29)	AR	12523220
	5-B14	4.376	**SHIM**, INPUT SHF BRG (.028MM)	93	F (M28, M29)	AR	12523221
	5-B14	4.376	**SHIM**, INPUT SHF BRG (.030MM)	93	F (M28, M29)	AR	12523222
	5-B14	4.376	**SHIM**, INPUT SHF BRG (.032MM)	93	F (M28, M29)	AR	12523223
	5-B14	4.376	**SHIM**, INPUT SHF BRG (.034MM)	93	F (M28, M29)	AR	12523224
	5-B14	4.376	**SHIM**, INPUT SHF BRG (.036MM)	93	F (M28, M29)	AR	12523225
	5-B14	4.376	**SHIM**, INPUT SHF BRG (.038MM)	93	F (M28, M29)	AR	12523226
	5-B14	4.376	**SHIM**, INPUT SHF BRG (.040MM)	93	F (M28, M29)	AR	12523227
	5-B14	4.376	**SHIM**, INPUT SHF BRG (.042MM)	93	F (M28, M29)	1	12523228
	5-B14	4.376	**SHIM**, INPUT SHF BRG (.044MM)	93	F (M28, M29)	AR	12523229
	5-B14	4.376	**SHIM**, INPUT SHF BRG (.046MM)	93	F (M28, M29)	AR	12523230
	5-B14	4.376	**SHIM**, INPUT SHF BRG (.048MM)	93	F (M28, M29)	AR	12523231
	5-B14	4.376	**SHIM**, INPUT SHF BRG (.050MM)	93	F (M28, M29)	AR	12523232
103.		N.S.	**RACE**, COUNTERSHAFT BEARING (PART OF 104)		.....		
104.	5-B18	4.422	**BEARING**, CNTR GR FRT (INCL 103)	93	F (M28, M29)	1	12523054
105.	5-B18	4.421	**GEAR KIT**, CNTR (INCL 128)	93	F (M28, GU2)	1	12525944
	5-B18	4.421	**GEAR KIT**, CNTR (INCL 128)	93	F (M29, GU5)	1	12525945
106.	5-B18	4.422	**BEARING**, CNTR GR RR (INCL 107)	93	F (M28, M29)	1	12523216
107.		N.S.	**RACE**, COUNTERSHAFT BEARING) (PART OF 106)		.....		
108.	5-B18	4.422	**WASHER**, CNTR GR BRK PLT SPR (4.421)	93	F (M28, M29)	1	12523038
109.	5-B16	4.415	**GEAR**, 6TH (TRANS MAIN SHF) .	93	F (M28, M29)	1	12523256
110.	5-B13	4.355	**BEARING**, 3RD GR	93	F (M28, M29)	1	12523073
111.	5-B10	4.303	**FORK**, REV SHFT (INCL 112)	93	F (M28, M29)	1	12523288

cardiagn.com

112.	5-B12	4.312	**INSERT**, REV SHFT FORK (PART OF 111)	93	F (M28, M29)	2	12523233
113.	5-B12	4.312	**RING**, REV SHFT FORK RET (4.422)	93	F (M28, M29)	1	12523055
114.	5-B15	4.383	**RING**, 6TH GR BLOCKING (W/CARBON RINGS) (4.384)	93	F (M28, M29)	1	12523252
115.	5-B17	4.416	**SPACER**, MAIN SHF GR BRG	93	F (M28, M29)	1	12523254
116.	5-B15	4.384	**RING**, TRANS SYN RET (4.318)	93	F (M28, M29)	1	12523253
117.	5-B14	4.380	**SYNCHRONIZER**, 5TH & 6TH GR (INCL 118 THRU 121)	93	F (M28, M29)	1	12523250
118.	5-B15	4.384	**SPRING**, SYN (5TH/6TH) (PART OF 117)	93	F (M28, M29)	2	12523251
119.	5-B15	4.384	**KEY**, 5TH & 6TH & REV SYN (PART OF 117) (WINGED FLANGES ON SIDES OF KEY)	93	F (M28, M29)	3	14083521
120.		N.S.	**HUB**, 5TH/6TH SYN (PART OF 117)				
121.		N.S.	**SLEEVE**, 5TH/6TH SYN (PART OF 117)				
122.	5-B10	4.303	**FORK**, 5TH & 6TH SHFT (INCL 123)	93	F (M28, M29)	1	12523258
123.	5-B12	4.312	**INSERT**, 5TH & 6TH SHFT FORK (PART OF 122)	93	F (M28, M29)	2	12523233
124.	5-B15	4.384	**RING**, 5TH GR SYN RET (.89 ID)	93	F (M28, M29)	1	12541290
125.	5-B15	4.383	**RING**, 5TH GR BLOCKING (W/CARBON RINGS) (4.384)	93	F (M28, M29)	1	12523252
126.	5-B16	4.415	**GEAR**, 5TH (DRV)	93	F (M28, M29)	1	12523248
127.	5-B13	4.355	**BEARING**, 5TH GR	93	F (M28, M29)	1	12523247
128.		N.S.	**GEAR**, 5TH CNTR (PART OF 105)				
129.		N.S.	**BEARING**, CTSHF EXTN (*KIT1)				
130.		N.S.	**RACE**, CTSF EXT BEARING (*KIT1)				
131.	5-B18	4.422	**SHIM**, FRT CTSHF EXTN BRG (.022MM)	93	F (M28, M29)	AR	12523259
	5-B18	4.422	**SHIM**, FRT CTSHF EXTN BRG (.024MM)	93	F (M28, M29)	AR	12523260
	5-B18	4.422	**SHIM**, FRT CTSHF EXTN BRG (.026MM)	93	F (M28, M29)	AR	12523261
	5-B18	4.422	**SHIM**, FRT CTSHF EXTN BRG (.028MM)	93	F (M28, M29)	AR	12523262
	5-B18	4.422	**SHIM**, FRT CTSHF EXTN BRG (.030MM)	93	F (M28, M29)	AR	12523263
	5-B18	4.422	**SHIM**, FRT CTSHF EXTN BRG (.032MM)	93	F (M28, M29)	AR	12523264
	5-B18	4.422	**SHIM**, FRT CTSHF EXTN BRG (.034 THK)	93	F (M28, M29)	AR	12523265
	5-B18	4.422	**SHIM**, FRT CTSHF EXTN BRG (.036MM)	93	F (M28, M29)	AR	12523266
	5-B18	4.422	**SHIM**, FRT CTSHF EXTN BRG (.038MM)	93	F (M28, M29)	AR	12523267
	5-B18	4.422	**SHIM**, FRT CTSHF EXTN BRG (.040MM)	93	F (M28, M29)	AR	12523268
	5-B18	4.422	**SHIM**, FRT CTSHF EXTN BRG (.042MM)	93	F (M28, M29)	AR	12523269
	5-B18	4.422	**SHIM**, FRT CTSHF EXTN BRG (.044MM)	93	F (M28, M29)	AR	12523270
	5-B18	4.422	**SHIM**, FRT CTSHF EXTN BRG (.046MM)	93	F (M28, M29)	AR	12523271

cardiagn.com

	5-B18	4.422	**SHIM**, FRT CTSHF EXTN BRG (.048MM)	93	F (M28, M29)	AR	12523272
	5-B18	4.422	**SHIM**, FRT CTSHF EXTN BRG (.050MM)	93	F (M28, M29)	AR	12523273
132.	5-B13	4.349	**FUNNEL**, TRANS LUB	93	F (M28, M29)	1	12523275
133.	5-B16	4.408	**BEARING**, MAIN SHF RR (W/TAPPERED ROLLERS)	93	F (M28, M29)	1	12523286
134.	5-B22	4.435	**BRACKET**, REV IDLER GR SHF	93	F (M28, M29)	1	12523287
135.	5-B18	4.422	**WASHER**, CNTR GR BRK PLT SPR (4.421)	93	F (M28, M29)	1	12523285
136.	5-B21	4.430	**GEAR**, REV IDLER	93	F (M28, M29)	1	12523283
137.	5-B21	4.431	**BEARING**, REV IDLER GR (4.355) (AC-DELCO #12523284)	93	F (M28, M29)	1	12523284
138.	5-B21	4.433	**SHAFT**, REV IDLER GR	93	F (M28, M29)	1	12523282
139.	5-B18	4.422	**WASHER**, CNTR GR BRK PLT SPR (REV IDLE GEAR THRUST) (4.421)	93	F (M28, M29)	1	12523285
140.		N.S.	**LEVER**, TRANS 5TH & 6TH SHFT (SERVICED BY COMPONENTS 141 THRU 148)				
141.	5-B9	4.302	**PIN**, REV SHFT COLR (PART OF 140) (3/16 X 13/16 ROLL) (8.939)	93	F (M28, M29)	1	454512
142.	5-B9	4.302	**COLLAR**, TRANS REV SHFT LVR (PART OF 140)	93	F (M28, M29)	1	12523203
143.	5-B11	4.309	**SHAFT**, 5TH & 6TH & REV SHFT (PART OF 140)	93	F (M28, M29)	1	12523202
144.	5-B9	4.302	**LEVER**, TRANS 5TH & 6TH SHFT (PART OF 140)	93	F (M28, M29)	1	12523204
145.		N.S.	**PAD**, 5TH/6TH SHIFT RAIL LEVER (PART OF 140, 144)				
146.		N.S.	**BUSHING**, 5TH/6TH SHIFT RAIL LEVER (PART OF 140, 144)				
147.	5-B10	4.307	**PIN**, REV SHFT LVR (PART OF 140) (3/16 X 13/16 ROLL) (8.939)	93	F (M28, M29)	1	454512
148.	5-B9	4.302	**LEVER**, OFFSET SHFT (REV SHFT RAIL) (PART OF 140) (REV)	93	F (M28, M29)	1	12523205
149.		N.S.	**RAIL ASSY** (SERVICED BY ITEMS 150 THRU 159)				
150.	5-B10	4.303	**FORK**, 1ST & 2ND SHFT	93	F (M28, M29)	1	12523210
151.	5-B12	4.312	**INSERT**, 1ST & 2ND SHFT FORK (PART OF 150)	93	F (M28, M29)	2	12523208
152.	5-B10	4.307	**PLATE**, SHFT INTLK (HELD INTO INTERLOCK PLATE)	93	F (M28, M29)	1	12523209
153.	5-B11	4.309	**SHAFT**, 1ST & 2ND & 3RD & 4TH SHFT	93	F (M28, M29)	1	12523206
154.	5-B10	4.307	**PIN**, 1ST & 2ND SHFT FORK (3/16 X 13/16 ROLL) (8.939)	93	F (M28, M29)	1	454512
155.	5-B9	4.302	**PIN**, CONT SEL. ARM	93	F (M28, M29)	1	12523211
156.	5-B10	4.307	**PLATE**, SHFT INTLK (GEAR SELECT) (HOLDS INTERLOCK PLATES)	93	F (M28, M29)	1	12523212
157.	5-B10	4.307	**PLATE**, SHFT INTLK (HELD INTO INTERLOCK PLATE)	93	F (M28, M29)	1	12523209
158.	5-B10	4.303	**FORK**, 3RD & 4TH SHFT	93	F (M28, M29)	1	12523207
159.	5-B12	4.312	**INSERT**, 3RD & 4TH SHFT FORK	93	F (M28, M29)	2	12523208
160.	5-B10	4.307	**SEAL**, REV LOCKOUT (O RING)	93	F (M28, M29)	1	12523301
161.	5-B9	4.104	**PIPE**, TRANS VENT	93	F (M28, M29)	1	12523309
	5-B9	4.104	**VENT**, M/TRNS (BREATHER)	93	F (M28, M29)	1	12523294

cardiagn.com

162.	5-N27	0.683	**HOUSING**, CLU	93	F (M28, M29)	1	12523310
163.	5-B8	4.083	**BOLT**, TRANS ADAP (M10X1.5-40MM) (0.683)	93	F (M28, M29)	11	12523235
164.	5-N27	0.795	**FORK**, CLU REL	93	F (M28, M29)	1	12523312
165.	5-N27	0.852	**NUT**, CLU LVR PIV (T-SHAPED)	93	F (M28, M29)	1	12523313
166.	5-N27	0.852	**BOLT**, CLU LVR PIV	93	F (M28, M29)	1	12523314
167.	5-N27	0.782	**BRACKET**, CLU ACTR CYL (0.829)	93	F (M28, M29)	1	12523315
168.	5-N27	0.780	**STUD**, CLU ACTR CYL (0.799)	93	F (M28, M29)	2	12524506
169.		N.S.	**RING**, SNAP (PART OF 91)				
170.		N.S.	**LOCKOUT**, REVERSE (PART OF91)				
171.		N.S.	**SPRING**, REVERSE LOCKOUT OUTER (PART OF 91)				
172.		N.S.	**SEAT**, REVERSE LOCKOUT (PART OF 91)				
173.		N.S.	**RING**, SNAP (PART OF 91)				
174.		N.S.	**SPRING**, REVERSE LOCKOUT INNER (PART OF 91)				
175.		N.S.	**BODY**, REVERSE LOCKOUT (PART OF 91)				
177.	5-B7	4.046	**BUMPER**, M/TRNS	93	F (M28, M29)	1	12524483
178.	5-N27	0.683	**BOLT**, TRANS FRT ADAPT (TO CLU HSG) (M10X1.5-40MM)	93	F (M28, M29)	8	12523235
179.	5-B17	4.416	**SPACER**, MAIN SHF GR BRG	93	F (M28, M29)	1	12523074

SERVICE KITS

	5-B6	4.003	**TRANSMISSION**, MAN (WHEN USING IN PLC OF 10142017, PROP SHF 12554456 MUST ALSO BE USED) (CODE DFH)	93	F (M28, GU2)	1	10236020
	5-B6	4.003	**TRANSMISSION**, MAN (WHEN USING IN PLC OF 10150060, PROP SHF 12554456 MUST ALSO BE USED)	93	F (M29, GU5)	1	10236021
	5-B8	4.085	**BOLT**, TRANS (T/W 12346004 SEALANT) (HFH 3/8-16X1.38 280M PZOR) (8.900)	93	F (M28, M29)	6	9439918
1.	5-B12	4.317	**BEARING**, CTSHF EXTN (INCLS 11, 22, 129, 130)	93	F (M28, M29)	1	12523059
2.	5-B16	4.408	**BEARING**, MAIN SHF RR (INCLS 77, 85) (W/STRAIGHT ROLLERS)	93	F (M28, M29)	1	12523057

RPO DEFINITIONS

GU2 – AXLE,REAR,2.73 RATIO
GU5 – AXLE,REAR,3.23 RATIO
LT1 – ENGINE-GAS, 8 CYL, 5.7L(5.7P),MFI,HO
M28 – TRANSMISSION MAN, 6 SPD, BORG WARNER, 85MM, 3.36 1ST, 1.35 3RD
M29 – TRANSMISSION MAN, 6 SPD, BORG WARNER, 85MM, 2.97 1ST, 1.44 3RD

cardiagn.com

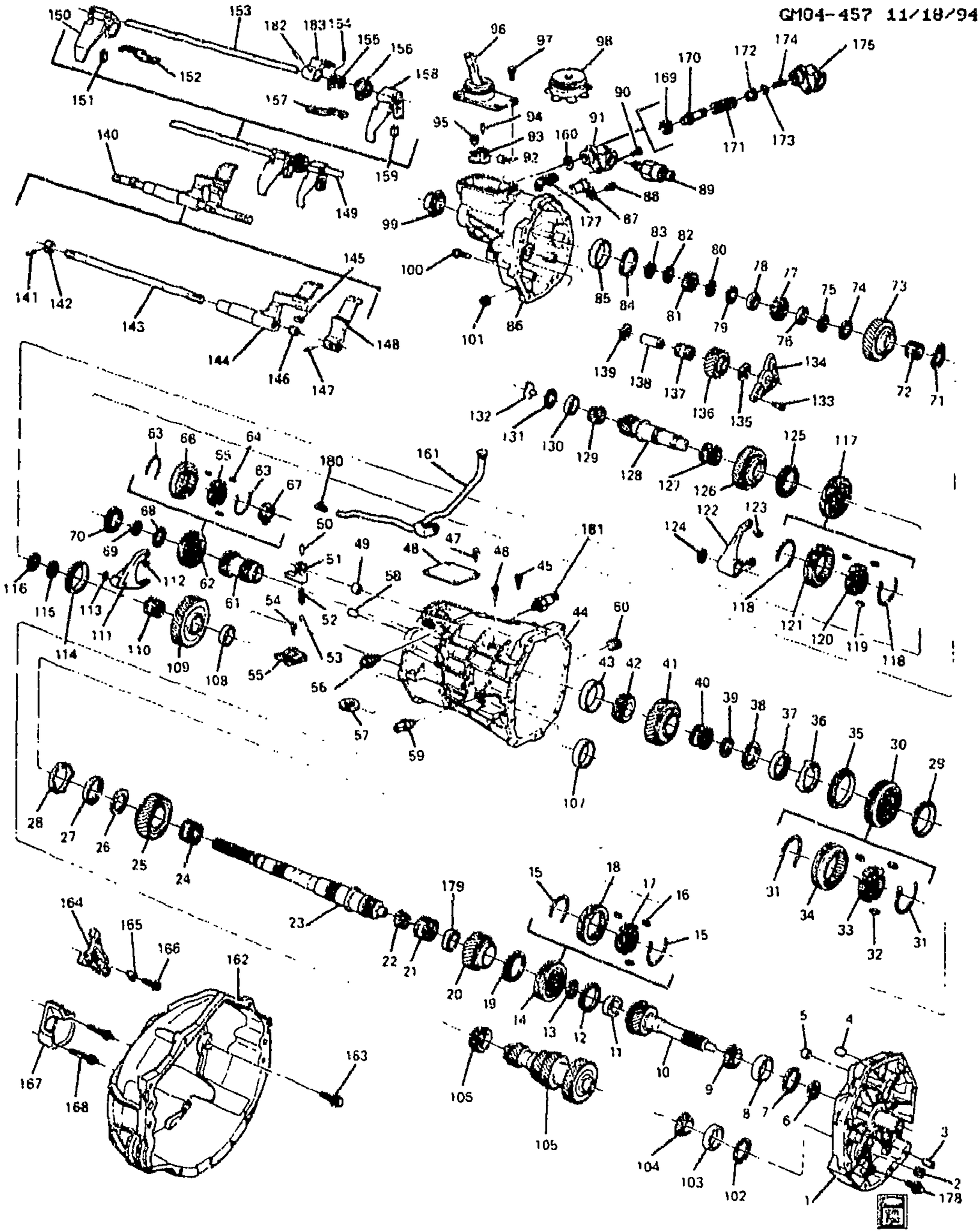

cardiaogn.com

1994-2002 F 6-SPEED MANUAL TRANSMISSION ASSEMBLY(MM6)

1.	5-B8	4.083	PLATE, TRANS FRT ADAP	94-97	F (MM6)	1	12523037
	5-B8	4.083	PLATE, TRANS FRT ADAP	98-02	F (MM6)	1	12453261
2.	5-B9	4.104	PLUG, TRANS FRT ADAPT INSP (8.971)	94-02	F (MM6)	1	12387621
3.	5-N27	0.685	PIN, CLU HSG LOC (4.105)	94-02	F (MM6)	2	12523217
4.	5-B9	4.104	PIN, TRANS CASE LOC (DOWEL) (0.685)	94-02	F (MM6)	2	12523068
5.	5-B11	4.309	BUSHING, TOP SHFT RL	94-02	F (MM6)	2	12523001
6.	5-B13	4.354	SEAL, INPUT SHF	94-02	F (MM6)	1	15635337
7.	5-B14	4.376	SHIM, INPUT SHF BRG (.022MM)	94-02	F (MM6)	AR	12523218
	5-B14	4.376	SHIM, INPUT SHF BRG (.026MM)	94-02	F (MM6)	AR	12523220
	5-B14	4.376	SHIM, INPUT SHF BRG (.028MM)	94-02	F (MM6)	AR	12523221
	5-B14	4.376	SHIM, INPUT SHF BRG (.030MM)	94-02	F (MM6)	AR	12523222
	5-B14	4.376	SHIM, INPUT SHF BRG (.032MM)	94-02	F (MM6)	AR	12523223
	5-B14	4.376	SHIM, INPUT SHF BRG (.034MM)	94-02	F (MM6)	AR	12523224
	5-B14	4.376	SHIM, INPUT SHF BRG (.036MM)	94-02	F (MM6)	AR	12523225
	5-B14	4.376	SHIM, INPUT SHF BRG (.038MM)	94-02	F (MM6)	AR	12523226
	5-B14	4.376	SHIM, INPUT SHF BRG (.040MM)	94-02	F (MM6)	AR	12523227
	5-B14	4.376	SHIM, INPUT SHF BRG (.042MM)	94-02	F (MM6)	AR	12523228
	5-B14	4.376	SHIM, INPUT SHF BRG (.044MM)	94-02	F (MM6)	AR	12523229
	5-B14	4.376	SHIM, INPUT SHF BRG (.046MM)	94-02	F (MM6)	AR	12523230
	5-B14	4.376	SHIM, INPUT SHF BRG (.048MM)	94-02	F (MM6)	AR	12523231
	5-B14	4.376	SHIM, INPUT SHF BRG (.050MM)	94-02	F (MM6)	AR	12523232
8.		N.S.	RACE, INPUT SHAFT BEARING (PART OF 9)				
9.	5-B13	4.355	BEARING, MAIN DRV GR (INCL 8)	94-02	F (MM6)	1	12523289
10.	5-B13	4.351	SHAFT, INPUT (INCLS 4TH GEAR)	94-97	F (MM6)	1	12523215
	5-B13	4.351	SHAFT, INPUT (INCLS 4TH GEAR) (4.403)	98-02	F (MM6)	1	12453260
11.		N.S.	RACE, INPUT SHAFT BEARING				
12.	5-B15	4.383	RING, 4TH GR BLOCKING (W/CARBON RINGS) (4.384)	94-02	F (MM6)	1	12523186
13.	5-B15	4.384	RING, TRANS SYN RET (1ST & 2ND GEAR) (4.318)	94-02	F (MM6)	2	12523187
14.	5-B14	4.380	SYNCHRONIZER, 3RD & 4TH GR (INCL 15 THRU 18)	94-02	F (MM6)	1	12523078
15.	5-B15	4.384	SPRING, SYN (3RD/4TH) (PART OF 14)	94-02	F (MM6)	2	12523185
16.	5-B17	4.416	KEY, 3RD & 4TH GR (PART OF 14) (WINGED FLANGES ON SIDES OF KEY) (4.384)	94-02	F (MM6)	3	14083521
17.		N.S.	HUB, 3RD/4TH SYC (PART OF 14)				
18.		N.S.	SLEEVE, 3RD/4TH SYC (PART OF 14)				
19.	5-B15	4.383	RING, 3RD GR BLOCKING (W/CARBON RINGS) (4.384)	94-02	F (MM6)	1	12523186
20.	5-B16	4.415	GEAR, 3RD (37 TEETH)	94-02	F (MM6)	1	12523077
21.	5-B13	4.355	BEARING, 3RD GR	94-02	F (MM6)	1	12523073
22.	5-B13	4.355	BEARING, 2ND GR (BEARING, MAINSHAFT SMALL TAPERED)	94-02	F (MM6)	1	12523073
23.	5-B16	4.403	SHAFT, MAIN	94-02	F (MM6)	1	12523072
24.	5-B13	4.355	BEARING, 2ND GR	94-02	F (MM6)	1	12523073

cardiagn.com

25.	5-B16	4.395	GEAR, 2ND (BORG WARNER #13-86-082-005-E) (43 TEETH) (4.415)	94-02	F (MM6)	1	12523190
26.	5-B17	4.416	WASHER, 1ST GR THR	94-02	F (MM6)	2	12523198
27.	5-B15	4.383	CONE, TRANS SYN	94-02	F (MM6)	2	12523195
28.	5-B15	4.383	CONE, TRANS 1-2 SYN	94-97	F (MM6)	2	12523195
	5-B15	4.383	CONE, TRANS 1-2 SYN	98-02	F (MM6)	2	12453259
29.	5-B15	4.383	RING, 2ND GR BLOCKING (4.384)	94-02	F (MM6)	1	88894078
30.	5-B14	4.380	SYNCHRONIZER, 1ST & 2ND GR (INCL 31 THRU 34) (4.423)	94-02	F (MM6)	1	12523191
31.	5-B15	4.384	SPRING, SYN (PART OF 30)	94-02	F (MM6)	2	12523193
32.	5-B15	4.384	INSERT, 1ST & 2ND GR SYN (PART OF 30)	94-02	F (MM6)	3	12523192
33.		N.S.	HUB, 1ST/2ND SYN) (PART OF 30				
34.		N.S.	SLEEVE, 1ST/2ND SYN) (PART OF 30				
35.	5-B10	4.303	RING, 1ST GR BLOCKING (4.384)	94-02	F (MM6)	1	88894078
36.	5-B15	4.383	CONE, TRANS 1-2 SYN	94-97	F (MM6)	2	12523196
	5-B15	4.383	CONE, TRANS 1-2 SYN	98-02	F (MM6)	2	12453259
37.	5-B15	4.383	CONE, TRANS SYN	94-02	F (MM6)	2	12523195
38.	5-B17	4.416	WASHER, 1ST GR THR	94-02	F (MM6)	2	12523198
39.	5-B15	4.384	RING, TRANS SYN RET (1ST & 2ND GEAR) (4.318)	94-02	F (MM6)	2	12523187
40.	5-B13	4.355	BEARING, 1ST GR (4.383)	94-02	F (MM6)	1	12523188
41.	5-B17	4.417	GEAR, 1ST (TRANS MAIN SHF)	94-02	F (MM6)	1	12523201
42.	5-B16	4.408	BEARING, MAIN SHF RR (INCL 43) (W/TAPPERED ROLLERS)	94-02	F (MM6)	1	12523286
43.		N.S.	RACE, MAINSHAFT BEARING (PART OF 42)				
44.	5-B8	4.103	CASE, TRANS (INCL 57)	94-02	F (MM6)	1	12523067
45.	5-B11	4.309	BOLT, REV SHFT SHF GDE	94-02	F (MM6)	2	12523213
46.	5-B11	4.309	BOLT, REV SHFT SHF GDE	94-02	F (MM6)	2	12523213
47.	5-B7	4.010	BOLT, FRT SHIFTER CVR (M8X1.25X20) (4.012)	94-02	F (MM6)	4	15546805
48.	5-B9	4.105	PLATE, TRANS FRT SHIFTER CVR	94-02	F (MM6)	1	12523290
49.	5-B11	4.309	BUSHING, TOP SHFT RL	94-02	F (MM6)	2	12523001
50.	5-B10	4.307	PIN, 1ST & 2ND SHFT FORK (3/16 X 13/16 ROLL) (8.939)	94-02	F (MM6)	1	454512
51.	5-B9	4.302	LEVER, OFFSET SHFT (FRT)	94-96	F (MM6)	1	12523241
	5-B9	4.302	LEVER, OFFSET SHFT (INCLS SKIP SHFT LVR)	97-02	F (MM6)	1	12369467
52.	5-B11	4.311	SPRING, SHFT DTNT BALL	94-02	F (MM6)	1	12523242
53.		8.899	BALL, 3/8 STEEL (AC-DELCO #7826284)	94-02		AR	7826284
54.	5-B10	4.303	BOLT, SHFT GDE PLT	94-02	F (MM6)	2	12523243
55.	5-B11	4.311	PLATE, SHFT GDE DTNT	94-02	F (MM6)	1	12523236
56.	5-B11	4.311	DETENT, SHFT INTLK	94-02	F (MM6)	1	12527784
57.	5-B9	4.105	MAGNET, TRANS (PART OF 44) (AC-DELCO #12386078)	94-02	F (MM6)	2	12386078
58.	5-B9	4.104	PIN, TRANS CASE FRT ADAP (0.685)	94-02	F (MM6)	2	12523068
59.	5-N27	2.698	SWITCH, B/U LP (M16X1.5 THD)	94-02	F (MM6)	1	14069600
60.	5-B9	4.104	PLUG, TRANS OIL FIL (8.971)	94-02	F (MM6)	1	12387621

cardiagn.com

61.	5-B16	4.415	**GEAR**, 5TH	94-02	F (MM6)	1	12523042
62.	5-B14	4.300	**SYNCHRONIZER**, REV GR (INCL 63 THRU 67)	94-02	F (MM6)	1	12523043
63.	5-B15	4.384	**SPRING**, SYN (5-6 & REVERSE)	94-02	F (MM6)	2	12523251
64.	5-B15	4.384	**KEY**, 5TH & 6TH & REV SYN (SPD) (WINGED FLANGES ON SIDES OF KEY)	94-02	F (MM6)	6	14083521
65.		N.S.	**HUB**, REV SYN (PART OF 62)				
66.		N.S.	**SLEEVE**, REV SYN (PART OF 62)				
67.	5-B15	4.384	**RETAINER**, REV GR SYN INSERT (PART OF 62)	94-02	F (MM6)	1	12523044
68.	5-B17	4.419	**WASHER**, REV GR THR (PEEK)	94-02	F (MM6)	1	12523047
69.	5-B15	4.384	**RING**, TRANS SYN RET (REVERSE) (4.318)	94-02	F (MM6)	1	12523253
70.	5-B15	4.383	**RING**, REV GR BLOCKING (4.384)	94-02	F (MM6)	1	12523049
71.	5-B17	4.419	**WASHER**, REV GR (LOCATED BETWEEN REV GR & SYNCHRO ASM)	94-02	F (MM6)	1	12523048
72.	5-B21	4.431	**BEARING**, REV GR	94-02	F (MM6)	1	12523050
73.	5-B17	4.417	**GEAR**, REV (TRANS MAIN SHF)	94-02	F (MM6)	1	12523052
74.	5-B17	4.419	**WASHER**, REV GR THR (LOCATED BETWEEN REV GR & REAR MAINSHAFT)	94-02	F (MM6)	1	12523053
75.	5-B15	4.384	**RING**, TRANS SYN RET (5-6 SYN HUB) (4.318)	94-02	F (MM6)	1	12523253
76.	5-B17	4.416	**SPACER**, MAIN SHF GR BRG	94-96	F (MM6)	1	12523056
	5-B17	4.416	**SPACER**, MAIN SHF GR BRG	97-02	F (MM6)	1	12369471
77.	5-B16	4.408	**BEARING**, MAIN SHF RR (INCL 85) (W/STRAIGHT ROLLERS)	94-02	F (MM6)	1	12523057
78.	5-B17	4.416	**SPACER**, MAIN SHF GR BRG	94-96	F (MM6)	1	12523056
	5-B17	4.416	**SPACER**, MAIN SHF GR BRG	97-02	F (MM6)	1	12369471
79.	5-B16	4.412	**RING**, MAIN SHF RR BRG RET	94-02	F (MM6)	1	12523058
	5-B16	4.412	**RING**, MAIN SHF RR BRG RET (5-6 SYN HUB) (4.318)	94-02	F (MM6)	1	12523253
80.	5-B13	4.338	**RING**, SPEEDO DRV GR RET (4.416)	94-02	F (MM6)	1	14058965
81.	5-B13	4.343	**GEAR**, SPEEDO SEN (17 TEETH) (4.337) (AC-DELCO #12530271)	94-02	F (MM6)	1	12530271
82.	5-B13	4.338	**RING**, SPEEDO DRV GR RET (4.416)	94-02	F (MM6)	1	14058965
83.	5-B17	4.416	**SPACER**, MAIN SHF GR BRG	94-96	F (MM6)	2	12523056
		N.S.	**SPACER**, MAIN SHF GR BRG (NO LONGER REQ'D W/START OF 1997)				
84.	5-B16	4.412	**RING**, MAIN SHF RR BRG RET	94-02	F (MM6)	1	12523058
	5-B16	4.412	**RING**, MAIN SHF RR BRG RET (5-6 SYN HUB) (4.318)	94-02	F (MM6)	1	12523253
85.		N.S.	**RACE**, MAINSHAFT BEARING (PART OF 77)				
86.	5-B12	4.317	**EXTENSION**, TRANS (STAMPED 12523276)	94-96	F (MM6)	1	12523276
	5-B12	4.317	**EXTENSION**, TRANS (STAMPED 12523276)	97	F (MM6) (1ST DES)	1	12523276
	5-B12	4.317	**EXTENSION**, TRANS	98-02	F (MM6)	1	12369468
	5-B12	4.317	**EXTENSION**, TRANS (STAMPED 12369468)	97	F (MM6) (2ND DES)	1	12369468

cardiagn.com

87.	5-B13	4.337	**SENSOR**, M/TRNS OUTPUT SPD (3.682)	94-02	F (MM6)	1	12523306
88.	5-B12	4.329	**BOLT**, VEH SPD SEN (M6X16) (9.8 7114M) (8.900)	94-02	F (MM6)	1	11516398
89.	5-B10	4.307	**SOLENOID**, REV LOCKOUT	94-02	F (MM6)	1	12523300
	5-B10	4.307	**SEAL**, REV LOCKOUT SOL (O RING)	94-02	F (MM6)	1	12523293
90.	5-B10	4.307	**BOLT**, REV LOCKOUT MTG	94-02	F (MM6)	1	12523302
91.	5-B10	4.307	**LOCKOUT**, REV (INCL 169 THRU 175)	94-02	F (MM6)	1	12523299
92.	5-B11	4.309	**BUSHING**, TOP SHFT RL	94-02	F (MM6)	2	12523001
93.	5-B9	4.302	**LEVER**, OFFSET SHFT (INCLS 95)	94-02	F (MM6)	1	12523298
94.	5-B9	4.302	**PIN**, OFFSET SHFT LVR (3/16 X 13/16 ROLL) (8.939)	94-02	F (MM6)	1	454512
95.		N.S.	**CUP**, ISOLATOR (PART OF 93)				
96.	5-B6	4.004	**CONTROL**, TRANS SHFT	94-98	F (MM6)	1	12523303
	5-B6	4.004	**CONTROL**, TRANS SHFT	99-02	F (MM6) (EXC BBS)	1	12523303
	5-B6	4.004	**CONTROL**, TRANS SHFT	99-02	F (MM6, BBS)	1	88893296
97.	5-B7	4.010	**BOLT**, M/TRNS CONT LVR HSG (SHIFTER ASSY) (M8X1.25X20) (4.012)	94-98	F (MM6)	4	15546805
	5-B7	4.010	**BOLT**, M/TRNS CONT LVR HSG (SHIFTER ASSY) (M8X1.25) (4.307)	99-02	F (MM6, BBS)	1	12455048
	5-B7	4.010	**BOLT**, FRT SHIFTER CVR (M8X1.25X20) (4.012)	99-02	F (MM6) (EXC BBS)	4	15546805
98.	5-B7	4.015	**BOOT**, M/TRNS CONT LVR (BOLTS TO UNDERBODY) (RUBBER)	97-02	F (MM6)	1	10267518
99.	5-B12	4.318	**SEAL**, MAIN SHF (HAS DBL LIP DES, INCLS BOOT) (AC-DELCO #10117848)	94-02	F (MM6)	1	10117848
	5-B12	4.318	**SEAL**, MAIN SHF (HAS TRIPLE LIP DES) (AC-DELCO #12530278)	94-98	F (MM6)	1	12530278
100.	5-B9	4.104	**BOLT**, TRANS CASE (EXTENSION HOUSING TO CASE) (M10X1.5-40MM) (0.683)	94-02	F (MM6)	8	12523235
101.	5-B9	4.104	**PLUG**, TRANS OIL DRN (8.971)	94-02	F (MM6)	1	12387621
102.	5-B18	4.422	**SHIM**, CNTR GR BRG (.014 THK) (4.376)	94-02	F (MM6)	AR	14050780
	5-B18	4.422	**SHIM**, CNTR GR BRG (.016 THK) (4.376)	94-02	F (MM6)	AR	14050781
	5-B18	4.422	**SHIM**, CNTR GR BRG (.018 THK) (4.376)	94-02	F (MM6)	AR	14050782
	5-B18	4.422	**SHIM**, CNTR GR BRG (.012 THK) (4.376)	94-02	F (MM6)	AR	14050783
	5-B18	4.422	**SHIM**, CNTR GR BRG (.036 THK) (4.376)	94-02	F (MM6)	AR	14050785
	5-B18	4.422	**SHIM**, CNTR GR BRG (.022 THK) (4.376)	94-02	F (MM6)	AR	14050786
	5-B18	4.422	**SHIM**, CNTR GR BRG (.024 THK) (4.376) (AC-DELCO #14069868)	94-02	F (MM6)	AR	14069868
	5-B18	4.422	**SHIM**, CNTR GR BRG (.025 THK) (4.376) (AC-DELCO #14069869)	94-02	F (MM6)	AR	14069869
	5-B18	4.422	**SHIM**, CNTR GR BRG (.026 THK) (4.376) (AC-DELCO #14069870)	94-02	F (MM6)	AR	14069870

cardiagn.com

	5-B18	4.422	**SHIM**, CNTR GR BRG (.027 THK) (4.376) (AC-DELCO #14069871)	94-02	F (MM6)	AR	14069871
	5-B18	4.422	**SHIM**, CNTR GR BRG (.028 THK) (4.376) (AC-DELCO #14069872)	94-02	F (MM6)	AR	14069872
	5-B18	4.422	**SHIM**, CNTR GR BRG (.029 THK) (4.376) (AC-DELCO #14069873)	94-02	F (MM6)	AR	14069873
	5-B18	4.422	**SHIM**, CNTR GR BRG (.030 THK) (4.376) (AC-DELCO #14069874)	94-02	F (MM6)	AR	14069874
	5-B18	4.422	**SHIM**, CNTR GR BRG (.031 THK) (4.376) (AC-DELCO #14069875)	94-02	F (MM6)	AR	14069875
	5-B18	4.422	**SHIM**, CNTR GR BRG (.032 THK) (4.376) (AC-DELCO #14069876)	94-02	F (MM6)	AR	14069876
	5-B18	4.422	**SHIM**, CNTR GR BRG (.033 THK) (4.376) (AC-DELCO #14069877)	94-02	F (MM6)	AR	14069877
	5-B18	4.422	**SHIM**, CNTR GR BRG (.034 THK) (4.376) (AC-DELCO #14069878)	94-02	F (MM6)	AR	14069878
	5-B18	4.422	**SHIM**, CNTR GR BRG (.035 THK) (4.376) (AC-DELCO #14069879)	94-02	F (MM6)	AR	14069879
	5-B18	4.422	**SHIM**, CNTR GR BRG (.037 THK) (4.376) (AC-DELCO #14069880)	94-02	F (MM6)	AR	14069880
	5-B18	4.422	**SHIM**, CNTR GR BRG (.038 THK) (4.376) (AC-DELCO #14069881)	94-02	F (MM6)	AR	14069881
	5-B18	4.422	**SHIM**, CNTR GR BRG (.039 THK) (4.376) (AC-DELCO #14069882)	94-02	F (MM6)	AR	14069882
	5-B18	4.422	**SHIM**, CNTR GR BRG (.040 THK) (4.376) (AC-DELCO #14069883)	94-02	F (MM6)	AR	14069883
	5-B18	4.422	**SHIM**, CNTR GR BRG (MAIN DR) (.020 THK) (4.376)	94-02	F (MM6)	AR	14050784
103.		N.S.	**RACE**, COUNTERSHAFT BEARING (PART OF 104)				
104.	5-B18	4.422	**BEARING**, CNTR GR FRT (INCL 103)	94-02	F (MM6)	1	12523054
105.	5-B18	4.421	**GEAR KIT**, CNTR (INCL 128)	94-97	F (LT1, MM6)	1	12525946
	5-B18	4.421	**GEAR KIT**, CNTR (INCL 128)	98-02	F (LS1, MM6)	1	12525946
106.	5-B18	4.422	**BEARING**, CNTR GR RR (INCL 107)	94-02	F (MM6)	1	12523216
107.		N.S.	**RACE**, COUNTERSHAFT BEARING) (PART OF 106)				
108.	5-B18	4.422	**WASHER**, CNTR GR BRK PLT SPR (4.421)	94-02	F (MM6)	1	12523038
109.	5-B16	4.415	**GEAR**, 6TH (TRANS MAIN SHF)	94-02	F (MM6)	1	12523257
110.	5-B18	4.422	**BEARING**, CNTR GR (4.355)	94-02	F (MM6)	1	12523255
111.	5-B10	4.303	**FORK**, REV SHFT (INCL 112)	94-02	F (MM6)	1	12523288
112.	5-B12	4.312	**INSERT**, REV SHFT FORK (PART OF 111)	94-02	F (MM6)	2	12523233
113.	5-B12	4.312	**RING**, REV SHFT FORK RET (4.422)	94-02	F (MM6)	1	12523055
114.	5-B15	4.383	**RING**, 6TH GR BLOCKING (W/PAPER RINGS)	98-02	F (MM6)	1	12453262
	5-B15	4.383	**RING**, 6TH GR BLOCKING (W/CARBON RINGS) (4.384)	94-02	F (MM6)	1	12523252
115.	5-B17	4.416	**SPACER**, MAIN SHF GR BRG (6TH SPD)	94-02	F (MM6)	1	12523254
116.	5-B15	4.384	**RING**, TRANS SYN RET (5-6 SYN HUB) (4.318)	94-02	F (MM6)	1	12523253
117.	5-B14	4.380	**SYNCHRONIZER**, 5TH & 6TH GR (INCL 118 THRU 121)	94-02	F (MM6)	1	12523250

cardiagn.com

118.	5-B15	4.384	SPRING, SYN (5-6 REV) (PART OF 117)	94-02	F (MM6)	2	12523251
119.	5-B15	4.384	KEY, 5TH & 6TH & REV SYN (SPD) (PART OF 117) (WINGED FLANGES ON SIDES OF KEY)	94-02	F (MM6)	6	14083521
120.		N.S.	HUB, 5TH/6TH SYN (PART OF 117)				
121.		N.S.	SLEEVE, 5TH/6TH SYN (PART OF 117)				
122.	5-B10	4.303	FORK, 5TH & 6TH SHFT (INCL 123)	94-02	F (MM6)	1	12523258
123.	5-B12	4.312	INSERT, 5TH & 6TH SHFT FORK (PART OF 122)	94-02	F (MM6)	2	12523233
124.	5-B15	4.384	RING, 5TH GR SYN RET (.89 ID)	94-02	F (MM6)	1	12541299
125.	5-B15	4.383	RING, 5TH GR BLOCKING (W/CARBON RINGS) (4.384)	94-02	F (MM6)	1	12523252
	5-B15	4.383	RING, 5TH GR BLOCKING (W/PAPER RINGS)	96-02	F (MM6)	1	12453262
126.	5-B16	4.415	GEAR, 5TH	94-02	F (MM6)	1	12523249
127.	5-B13	4.355	BEARING, 5TH GR	94-02	F (MM6)	1	12523247
128.		N.S.	GEAR, 5TH CNTR (PART OF 105)				
129.	5-B12	4.317	BEARING, CTSHF EXTN	94-02	F (MM6)	1	12523059
130.		N.S.	RACE, CTSF EXT BEARING (PART OF 129)				
131.	5-B18	4.422	SHIM, FRT CTSHF EXTN BRG (.022MM)	94-02	F (MM6)	AR	12523259
	5-B18	4.422	SHIM, FRT CTSHF EXTN BRG (.024MM)	94-02	F (MM6)	AR	12523260
	5-B18	4.422	SHIM, FRT CTSHF EXTN BRG (.026MM)	94-02	F (MM6)	AR	12523261
	5-B18	4.422	SHIM, FRT CTSHF EXTN BRG (.028MM)	94-02	F (MM6)	AR	12523262
	5-B18	4.422	SHIM, FRT CTSHF EXTN BRG (.030MM)	94-02	F (MM6)	AR	12523263
	5-B18	4.422	SHIM, FRT CTSHF EXTN BRG (.032MM)	94-02	F (MM6)	AR	12523264
	5-B18	4.422	SHIM, FRT CTSHF EXTN BRG (.034 THK)	94-02	F (MM6)	AR	12523265
	5-B18	4.422	SHIM, FRT CTSHF EXTN BRG (.036MM)	94-02	F (MM6)	AR	12523266
	5-B18	4.422	SHIM, FRT CTSHF EXTN BRG (.038MM)	94-02	F (MM6)	AR	12523267
	5-B18	4.422	SHIM, FRT CTSHF EXTN BRG (.040MM)	94-02	F (MM6)	AR	12523268
	5-B18	4.422	SHIM, FRT CTSHF EXTN BRG (.042MM)	94-02	F (MM6)	AR	12523269
	5-B18	4.422	SHIM, FRT CTSHF EXTN BRG (.044MM)	94-02	F (MM6)	AR	12523270
	5-B18	4.422	SHIM, FRT CTSHF EXTN BRG (.046MM)	94-02	F (MM6)	AR	12523271
	5-B18	4.422	SHIM, FRT CTSHF EXTN BRG (.048MM)	94-02	F (MM6)	AR	12523272
	5-B18	4.422	SHIM, FRT CTSHF EXTN BRG (.050MM)	94-02	F (MM6)	AR	12523273
132.	5-B13	4.349	FUNNEL, TRANS LUB	94-02	F (MM6)	1	12523275
133.	5-B22	4.435	BOLT, REV IDLER GR SHF (4.303)	94-02	F (MM6)	3	12523243
134.	5-B22	4.435	BRACKET, REV IDLER GR SHF	94-96	F (MM6)	1	12523287

cardiagn.com

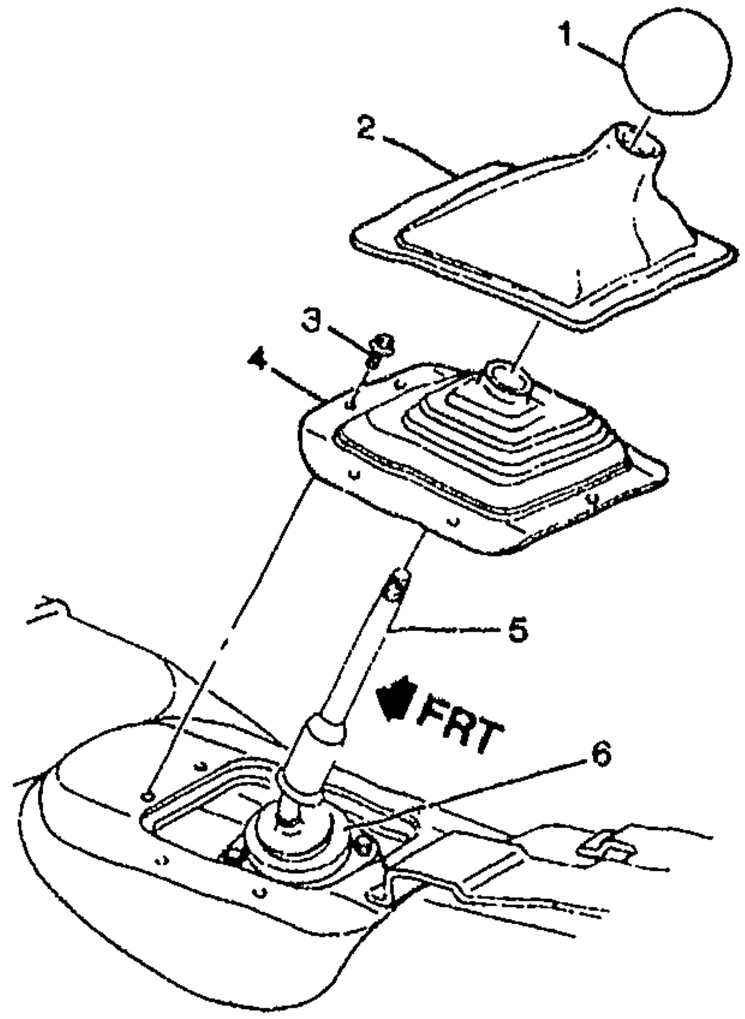

MF04-017

1993-2002 F SHIFT CONTROLS/MANUAL TRANSMISSION (M49)

1.	5-B6	4.006	**KNOB**, M/TRNS CONT LVR (W/O SHFT PATT) (BLACK) (LEATHER)	93-98	F (NP5)	1	14089466
	5-B6	4.006	**KNOB**, M/TRNS CONT LVR (W/O SHFT PATT) (BLACK) (PLASTIC) .	93-98	F (NK3)	1	10150052
	5-B6	4.006	**KNOB**, M/TRNS CONT LVR (W/O SHFT PATT) (BLACK) (PLASTIC) .	99	F (NK3) (EXC BBS)	1	10150052
	5-B6	4.006	**KNOB**, M/TRNS CONT LVR (W/O SHFT PATT) (BLACK) (LEATHER)	99	F (NP5)	1	12562940
	5-B6	4.006	**KNOB**, M/TRNS CONT LVR (W/O SHFT PATT) (BLACK) (LEATHER)	99	F (NP5) (EXC BBS)	1	14089466
	5-B6	4.006	**KNOB**, M/TRNS CONT LVR (W/O SHFT PATT) (BLACK)	00-02	F (NK3, M49) (EXC BBS)	1	12562939
	5-B6	4.006	**KNOB**, M/TRNS CONT LVR (W/O SHFT PATT) (BLACK) (LEATHER)	00-02	F (MM6, M49, NP5) (EXC BBS)	1	12562940
	5-B6	4.006	**KNOB**, M/TRNS CONT LVR (W/O SHFT PATT) (BLACK)	02	F (M49, NK3) (EXC BBS)	1	12562939
	5-B6	4.006	**KNOB**, M/TRNS CONT LVR (W/O SHFT PATT) (BLACK) (LEATHER)	02	F (M49, NP5) (EXC BBS)	1	12562940
2.	5-B7	4.015	**BOOT**, M/TRNS CONT LVR (ATCH TO CNSL TRIM PLT)	93-96	F (M49)		17997785
	5-B7	4.015	**BOOT**, M/TRNS CONT LVR (GRAY) (ATCH TO CNSL TRIM PLATE)	97-02	F (M49)	1	10271369
3.		8.900	**BOLT/SCREW**, HWH W/FL WA M4.2X1.41X20, 6010M, 7253M, 12.5 OD, DOG PT (M/TRNS CONT LVR) (8.977)	93-02	F	7	11509709
4.	5-A11	4.015	**BOOT**, M/TRNS CONT LVR (LWR, ATCH TO FLR)	93-02	F	1	10267519

cardiagn.com

	5-B7	4.015	BOOT, M/TRNS CONT LVR (GRAY) (ATCH TO CNSL TRIM PLATE)	97-02	F	1	10271369
3.		8.900	BOLT/SCREW, HWH W/FL WA M4.2X1.41X20, 6010M, 7253M, 12.5 OD, DOG PT (M/TRNS CONT LVR) (8.977)	93-02	.....	7	11509709
4.	5-B7	4.015	BOOT, M/TRNS CONT LVR (BOLTS TO UNDERBODY) (RUBBER)	93-02	F	1	10267518
5.	5-B6	4.006	HANDLE, M/TRNS CONT LVR REL	93	F (M28, M29)	1	10215351
	5-B6	4.006	HANDLE, M/TRNS CONT LVR REL	94-02	F (MM6)	1	10215351
6.		8.900	BOLT, HVY HEX HD) (M8X1.25X12 10.9 ZE) (M/TRNS CONT LVR)	93-02	.....	2	11515754

RPO DEFINITIONS

BBS – KNOB SHIFTER HURST
MM6 – TRANSMISSION MAN 6 SPD, BORG WARNER, 85MM, 1ST 2.66, 6TH 0.50, O/D
M28 – TRANSMISSION MAN, 6 SPD, BORG WARNER, 85MM, 3.36 1ST, 1.35 3RD
M29 – TRANSMISSION MAN, 6 SPD, BORG WARNER, 85MM, 2.97 1ST, 1.44 3RD
M49 – TRANSMISSION MAN 5 SPD, BORG WARNER, 77MM, 3.75 1ST, .76 5TH, O/D
NK3 – STEERING WHEEL,SPORT,SOFT RIM,SIMULATED LEATHER
NP5 – STEERING WHEEL,LEATHER WRAPPED

cardiagn.com

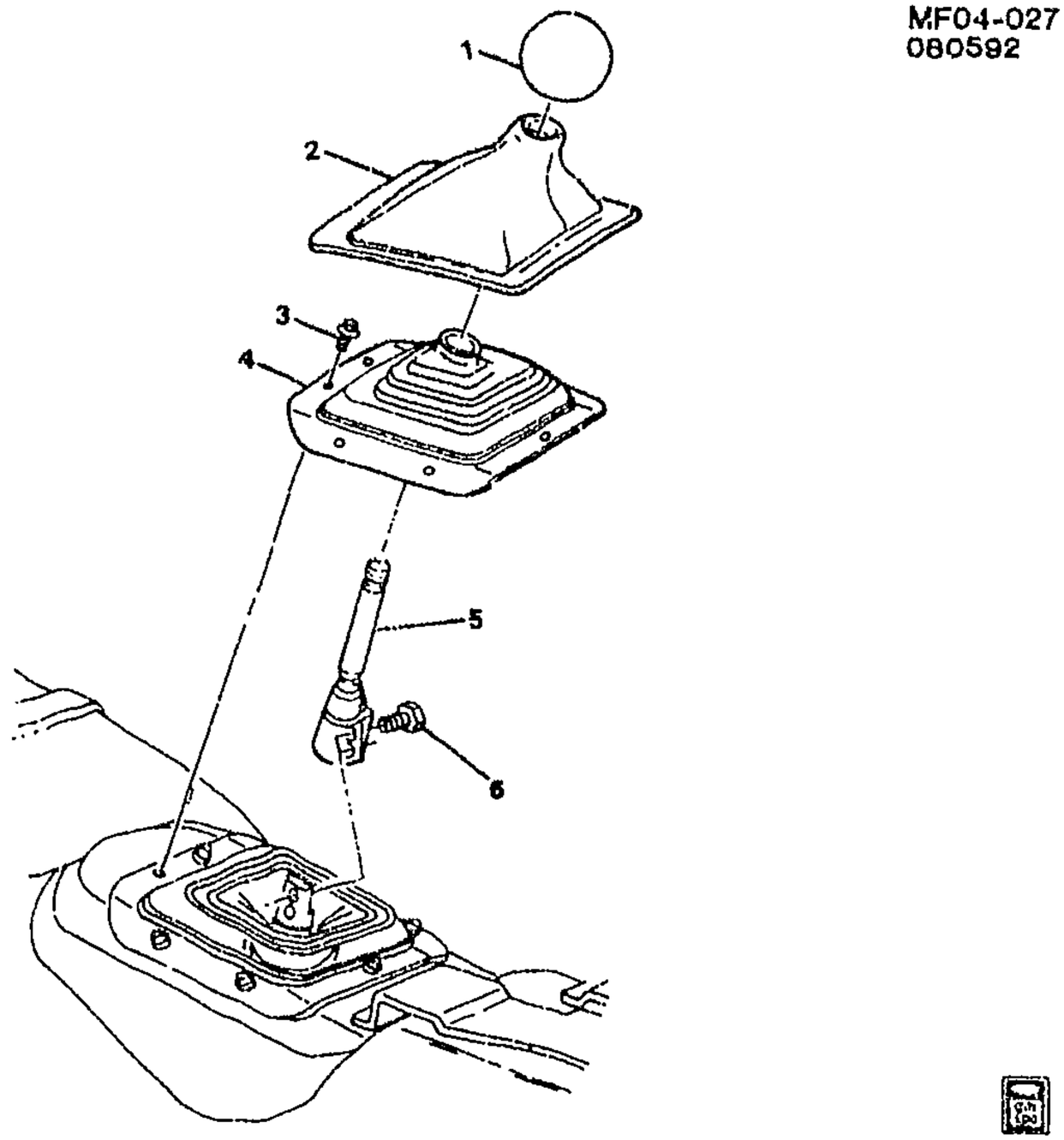

MF04-027

1993 F SHIFT CONTROLS/MANUAL TRANSMISSION (M28,M29)
1994-2002 F SHIFT CONTROLS/MANUAL TRANSMISSION (MM6)

1.	5-B6	4.006	KNOB, M/TRNS CONT LVR (W/O SHFT PATT) (BLACK) (PLASTIC) .	93-98	F (NK3)	1	10150052
	5-B6	4.006	KNOB, M/TRNS CONT LVR (W/O SHFT PATT) (BLACK) (LEATHER)	93-98	F (NP5)	1	14089466
	5-B6	4.006	KNOB, M/TRNS CONT LVR (W/O SHFT PATT) (BLACK) (PLASTIC) .	99	F (NK3) (EXC BBS)	1	10150052
	5-B6	4.006	KNOB, M/TRNS CONT LVR (W/O SHFT PATT) (BLACK) (LEATHER)	99	F (NP5)	1	12562940
	5-B6	4.006	KNOB, M/TRNS CONT LVR (W/O SHFT PATT) (BLACK)	99-02	F (MM6, BBS)	1	12562942
	5-B6	4.006	KNOB, M/TRNS CONT LVR (W/O SHFT PATT) (BLACK) (LEATHER)	99	F (NP5) (EXC BBS)	1	14089466
	5-B6	4.006	KNOB, M/TRNS CONT LVR (W/O SHFT PATT) (BLACK)	00-02	F (MM6, NK3) (EXC BBS)	1	12562939
	5-B6	4.006	KNOB, M/TRNS CONT LVR (W/O SHFT PATT) (BLACK) (LEATHER)	00-02	F (MM6, M49, NP5) (EXC BBS)	1	12562940
	5-B6	4.006	KNOB, M/TRNS CONT LVR (W/O SHFT PATT) (BLACK) (LEATHER)	02	F (MM6, NP5) (EXC BBS)	1	12562940
2.	5-B7	4.015	BOOT, M/TRNS CONT LVR (ATCH TO CNSL TRIM PLT)	93-96	F	1	17997785

cardiagn.com

SERVICE KITS

5–B6	**4.003**	**TRANSMISSION**, MAN (CODES DLD, DLF, DLK)	**94–97**	F (LT1, MM6)	**1**	**12558016**
5–B6	**4.003**	**TRANSMISSION**, MAN (CODE DAX)	**98**	F (LS1, MM6)	**1**	**12552099**
5–B6	**4.003**	**TRANSMISSION**, MAN (CODE DAX)	**99–02**	F (LS1, MM6) (EXC BBS)	**1**	**12552099**
5–B6	**4.003**	**TRANSMISSION**, MAN (CODE DXA)	**99–02**	F (LS1, MM6, BBS)	**1**	**12561561**

RPO DEFINITIONS

BBS – KNOB SHIFTER HURST
LS1 – ENGINE GAS, 8 CYL, 5.7L, SFI, ALUMINUM ENGINE
LT1 – ENGINE–GAS, 8 CYL, 5.7L(5.7P),MFI,HO
MM6 – TRANSMISSION MAN 6 SPD, BORG WARNER, 85MM, 1ST 2.66, 6TH 0.50, O/D

cardiagn.com

162.	5-N27	0.683	HOUSING, CLU	94-97	F (MM6)	1	12523310
	5-N27	0.683	HOUSING, CLU	98-02	F (MM6)	1	12453263
163.	5-B8	4.083	BOLT, TRANS ADAP (M10X1.5-40MM) (0.683)	94-02	F (MM6)	11	12523235
164.	5-N27	0.795	FORK, CLU REL	94-97	F (MM6)	1	12523312
		N.S.	FORK, CLU REL (NOT REQUIRED FOR 1998 & FORWARD)				
165.	5-N27	0.852	NUT, CLU LVR PIV (T-SHAPED)	94-97	F (MM6)	1	12523313
		N.S.	NUT, CLU LVR PIV (NOT REQUIRED FOR 1998 & FORWARD)				
166.	5-N27	0.852	BOLT, CLU LVR PIV	94-97	F (MM6)	1	12523314
		N.S.	BOLT, CLU LVR PIV (NOT REQUIRED FOR 1998 & FORWARD)				
167.	5-N27	0.782	BRACKET, CLU ACTR CYL (0.829)	94-97	F (MM6)	1	12523315
		N.S.	BRACKET, CLU ACTR CYL (NOT REQUIRED FOR 1998 & FORWARD)				
168.	5-N27	0.780	STUD, CLU ACTR CYL (0.799)	94-97	F (MM6)	2	12524506
		N.S.	STUD, CLU ACTR CYL (NOT REQUIRED FOR 1998 & FORWARD)				
169.		N.S.	RING, SNAP (PART OF 91)				
170.		N.S.	LOCKOUT, REVERSE (PART OF91)				
171.		N.S.	SPRING, REVERSE LOCKOUT OUTER (PART OF 91)				
172.		N.S.	SEAT, REVERSE LOCKOUT (PART OF 91)				
173.		N.S.	RING, SNAP (PART OF 91)				
174.		N.S.	SPRING, REVERSE LOCKOUT INNER (PART OF 91)				
175.		N.S.	BODY, REVERSE LOCKOUT (PART OF 91)				
177.	5-B7	4.046	BUMPER, M/TRNS	94-02	F (MM6)	1	12524483
178.	5-N27	0.683	BOLT, TRANS FRT ADAPT (TO CLU HSG) (M10X1.5-40MM)	94-02	F (MM6)	8	12523235
179.	5-B17	4.416	SPACER, MAIN SHF GR BRG (3RD SPD)	94-96	F (MM6)	1	12523074
	5-B17	4.416	SPACER, MAIN SHF GR BRG	97-02	F (MM6)	1	12369466
180.	5-B9	4.104	VENT, M/TRNS	94-02	F (MM6)	1	12523294
181.	5-B10	4.307	SOLENOID, SKIP SHFT	94-02	F (MM6)	1	12523292
	5-B10	4.307	SEAL, SKIP SHFT SOL (O RING)	94-02	F (MM6)	1	12523293
182.	5-B10	4.307	PIN, 1ST & 2ND SHFT FORK (3/16 X 13/16 ROLL) (8.939)	94-02	F (MM6)	1	454512
183.	5-B9	4.302	LEVER, SKIP SHFT LVR	94-00	F (MM6)	1	12534782
	5-B9	4.302	LEVER, OFFSET SHFT (REV)	97-02	F (MM6)	1	12523205
	5-B9	4.302	LEVER, OFFSET SHFT (INCLS SKIP SHFT LVR)	98-02	F (MM6)	1	12369467
	5-B9	4.302	LEVER, OFFSET SHFT (STAMPED 12369467) (INCLS SKIP SHFT LVR)	97	F (MM6) (2ND DES)	1	12369467
	5-B9	4.302	LEVER, OFFSET SHFT (STAMPED 12523241) (FRT)	97	F (MM6) (1ST DES)	1	12523241

cardiagn.com

	5-B22	4.435	BRACKET, REV IDLER GR SHF	98-02	F (MM6)	1	12369470
	5-B22	4.435	BRACKET, REV IDLER GR SHF (STAMPED 12369470)	97	F (MM6) (2ND DES)	1	12369470
	5-B22	4.435	BRACKET, REV IDLER GR SHF (STAMPED 12523287)	97	F (MM6) (1ST DES)	1	12523287
135.	5-B18	4.422	WASHER, CNTR GR BRK PLT SPR (4.421)	94-02	F (MM6)	1	12523285
136.	5-B21	4.430	GEAR, REV IDLER	94-02	F (MM6)	1	12523283
137.	5-B21	4.431	BEARING, REV IDLER GR (4.355) (AC-DELCO #12523284)	94-02	F (MM6)	1	12523284
138.	5-B21	4.433	SHAFT, REV IDLER GR	94-96	F (MM6)	1	12523282
	5-B21	4.433	SHAFT, REV IDLER GR (HAS 12.9MM PILOT DIA. FOR 1ST DES SEE 12523287)	97	F (MM6) (2ND DES)	1	12369469
	5-B21	4.433	SHAFT, REV IDLER GR (HAS 10.9MM PILOT DIA, FOR 2ND DES SEE 12369469)	97	F (MM6) (1ST DES)	1	12523282
	5-B21	4.433	SHAFT, REV IDLER GR	98-02	F (MM6)	1	12369469
139.	5-B18	4.422	WASHER, CNTR GR BRK PLT SPR (REV IDLE GEAR THRUST) (4.421)	94-02	F (MM6)	1	12523285
140.		N.S.	LEVER, TRANS 5TH & 6TH SHFT (SERVICED BY COMPONENTS 141 THRU 148)				
141.	5-B9	4.302	PIN, REV SHFT COLR (PART OF 140) (3/16 X 13/16 ROLL) (8.939)	94-02	F (MM6)	1	454512
142.	5-B9	4.302	COLLAR, TRANS REV SHFT LVR	94-02	F (MM6)	1	12523203
143.	5-B11	4.309	SHAFT, 5TH & 6TH & REV SHFT	94-02	F (MM6)	1	12523202
144.	5-B9	4.302	LEVER, TRANS 5TH & 6TH SHFT	94-02	F (MM6)	1	12523204
145.		N.S.	PAD, 5TH/6TH SHIFT RAIL LEVER (PART OF 144)				
146.		N.S.	BUSHING, 5TH/6TH SHIFT RAIL LEVER (PART OF 144)				
147.	5-B10	4.307	PIN, REV SHFT LVR (3/16 X 13/16 ROLL) (8.939)	94-02	F (MM6)	1	454512
148.	5-B9	4.302	LEVER, OFFSET SHFT (REV SHFT RAIL) (REV)	94-02	F (MM6)	1	12523205
149.		N.S.	RAIL ASSY (SERVICED BY ITEMS 150 THRU 159)				
150.	5-B10	4.303	FORK, 1ST & 2ND SHFT	94-02	F (MM6)	1	12523210
151.	5-B12	4.312	INSERT, 1ST & 2ND SHFT FORK	94-02	F (MM6)	2	12523206
152.	5-B10	4.307	PLATE, SHFT INTLK (HELD INTO INTERLOCK PLATE)	94-02	F (MM6)	1	12523209
153.	5-B11	4.309	SHAFT, 1ST & 2ND & 3RD & 4TH SHFT	94-02	F (MM8)	1	12523206
154.	5-B10	4.307	PIN, 1ST & 2ND SHFT FORK (3/16 X 13/16 ROLL) (8.939)	94-02	F (MM6)	1	454512
155.	5-B9	4.302	PIN, CONT SEL ARM	94-02	F (MM6)	1	12523211
156.	5-B10	4.307	PLATE, SHFT INTLK (GEAR SELECT) (HOLDS INTERLOCK PLATES)	94-02	F (MM6)	1	12523212
157.	5-B10	4.307	PLATE, SHFT INTLK (HELD INTO INTERLOCK PLATE)	94-02	F (MM6)	1	12523209
158.	5-B10	4.303	FORK, 3RD & 4TH SHFT	94-02	F (MM6)	1	12523207
159.	5-B12	4.312	INSERT, 3RD & 4TH SHFT FORK	94-02	F (MM6)	2	12523208
160.	5-B10	4.307	SEAL, REV LOCKOUT (O RING)	94-02	F (MM6)	1	12523301
161.	5-B9	4.104	PIPE, TRANS VENT	94-02	F (MM6)	1	12523309

cardiagn.com

							MF04–017
5.	5–A11	4.004	CONTROL, M/TRNS (W/O SHFT PATT) (SEE "MANUAL TRANS" ILLUSTRATION IN GRP. 4.000 FOR DETAILED VIEW.)	93–02	F (M49)	1	12520793
6.	5–B7	4.015	BOOT, M/TRNS CONT LVR (TO CONT HSG ON TRANS)	93–02	F (M49)	1	12542549

RPO DEFINITIONS

BBS – KNOB SHIFTER HURST
MM6 – TRANSMISSION MAN 6 SPD, BORG WARNER, 85MM, 1ST 2.66, 6TH 0.50, O/D
M49 – TRANSMISSION MAN 5 SPD, BORG WARNER, 77MM, 3.75 1ST, .76 5TH, O/D
NK3 – STEERING WHEEL,SPORT,SOFT RIM,SIMULATED LEATHER
NP5 – STEERING WHEEL,LEATHER WRAPPED

cardiagn.com

ILLUSTRATION INDEX

	TITLE	GRID
1993	F AUTOMATIC TRANSMISSION (MD8) PART 1 HM 4L60 CASE & RELATED PARTS	6–D4
1993	F AUTOMATIC TRANSMISSION (MD8) PART 2 HM 4L60 INTERNAL POWER TRAIN PARTS	6–D12
1993	F AUTOMATIC TRANSMISSION (MD8) PART 3 HM 4L60 CONTROL VALVE	6–D22
1993	F AUTOMATIC TRANSMISSION (MD8) PART 4 HM 4L60 OIL PUMP	6–E2
1993	F AUTOMATIC TRANSMISSION (MD8) PART 5 HM 4L60 AUXILIARY ACCUMULATOR VALVE	6–E7
1993	F AUTOMATIC TRANSMISSION (MD8) PART 6 HM 4L60 PARK LOCK	6–E9
1994	F AUTOMATIC TRANSMISSION (M30) PART 2 (4L60E) CLUTCH GEARS	6–E11
1994	F AUTOMATIC TRANSMISSION (M30) PART 4 (4L60E) OIL PUMP	6–E20
1994–1995	F AUTOMATIC TRANSMISSION (M30) PART 1 (4L60E) CASE & RELATED PARTS/PARK LOCK LINKAGE	6–F2
1994–1995	F AUTOMATIC TRANSMISSION (M30) PART 3 (4L60E) CONTROL VALVE	6–F11
1995–1996	F AUTOMATIC TRANSMISSION (M30) PART 2 (4L60E) CLUTCH GEARS	6–F15
1995–2002	F AUTOMATIC TRANSMISSION (M30) PART 4 (4L60E) OIL PUMP	6–G2
1996	F AUTOMATIC TRANSMISSION (M30) PART 1 (4L60E) CASE & RELATED PARTS/PARK LOCK LINKAGE	6–G9
1996–2002	F AUTOMATIC TRANSMISSION (M30) PART 3 (4L60E) CONTROL VALVE	6–G17
1997	F AUTOMATIC TRANSMISSION (M30) PART 1 (4L60E) CASE & RELATED PARTS/PARK LOCK LINKAGE	6–G21
1997–1998	F AUTOMATIC TRANSMISSION (M30) PART 2 (4L60E) CLUTCH GEARS	6–H2
1998–2002	F AUTOMATIC TRANSMISSION (M30) PART 1 (4L60E) CASE & RELATED PARTS/PARK LOCK LINKAGE	6–H11
1999–2002	F AUTOMATIC TRANSMISSION (M30) PART 2 (4L60E) CLUTCH GEARS	6–I2
1993	F THROTTLE VALVE CABLE (MD8)	6–I11
1993	F FILLER TUBE & OIL COOLER PIPES (MD8)	6–I12
1994–1995	F FILLER TUBE & OIL COOLER PIPES (LT1,L32,M30)	6–I14
1996–1997	F FILLER TUBE & OIL COOLER PIPES (LT1,M30)	6–I14
1995–1997	F FILLER TUBE & OIL COOLER PIPES (L36,M30)	6–I16
1998–2002	F FILLER TUBE & OIL COOLER PIPES (L36,M30)	6–I18
1998–2002	F FILLER TUBE & OIL COOLER PIPES (LS1,M30)	6–I20
1993	F SHIFT CONTROL/AUTOMATIC TRANSMISSION (MD8)	6–I22
1994–2002	F SHIFT CONTROL/AUTOMATIC TRANSMISSION (M30)	6–I22
1993	F SPEED SENSOR/TRANSMISSION	6–I26
1994–2002	F SPEED SENSOR/TRANSMISSION	6–J2

cardiagn.com

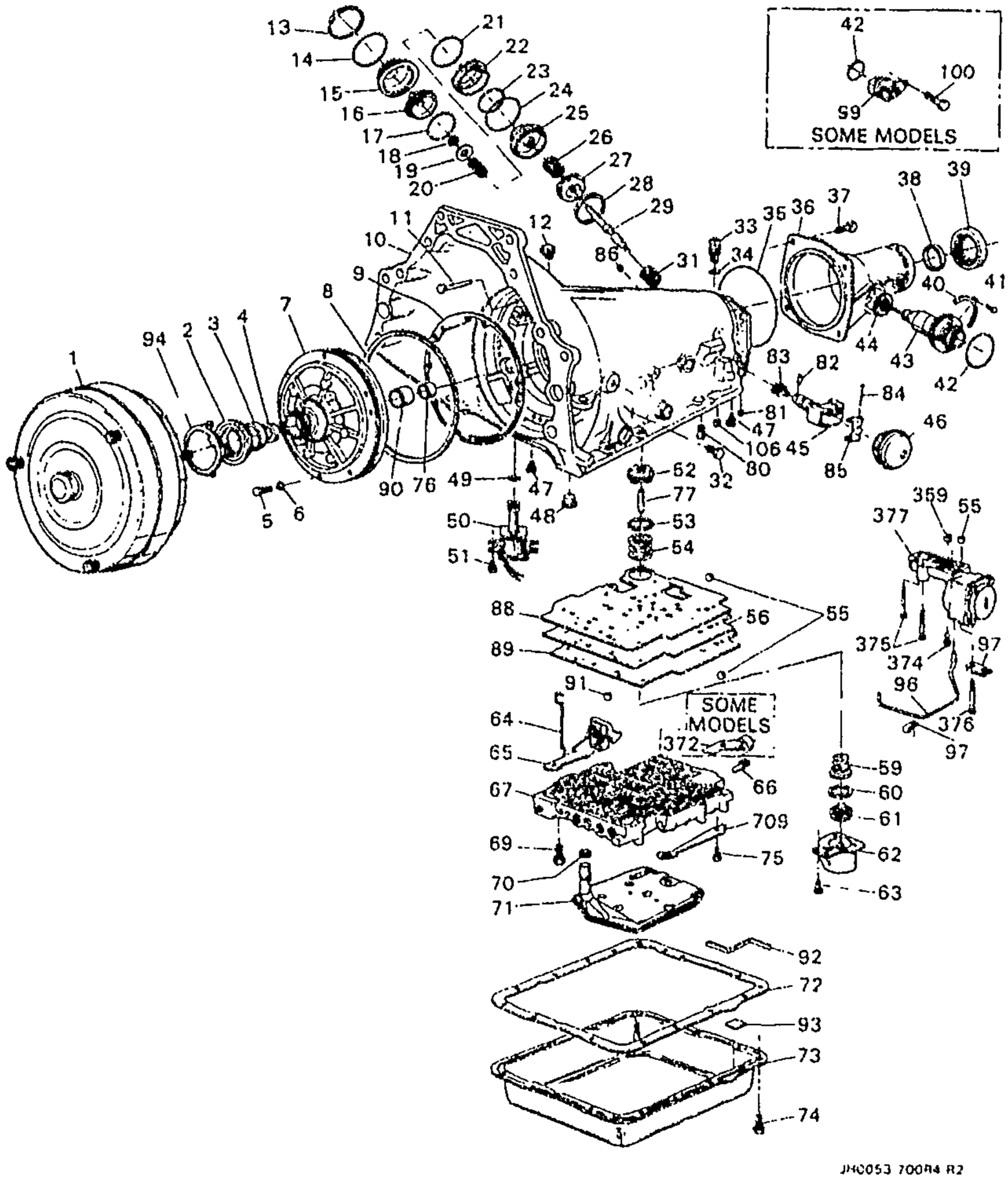

GM04-267F

1993 F AUTOMATIC TRANSMISSION (MD8) PART 1 HM 4L60 CASE & RELATED PARTS

1.	6-A17	4.115	CONVERTER, TORQ (REMAN) (CODE DGHG)	93 F (LT1, MD8)	1	24202174
	6-A17	4.115	CONVERTER, TORQ (REMAN) (CODE HEHD)	93 F (L32, MD8)	1	24202947
2.	6-B17	4.226	SEAL, T/CV FLUID (*KIT2, KIT3) (AC-DELCO #24202535)	93 F (MD8)	1	24202535
3.	6-A17	4.115	BUSHING, T/CV (AC-DELCO #24206030)	93 F (MD8)	1	24206030

cardiagn.com

4.	6–B17	4.226	**BUSHING**, INPUT SHF FRT (AC–DELCO #8647954)	93	F (MD8)	1	8647954
5.	6–B17	4.226	**BOLT**, A/TRNS FLUID PUMP (INCL 6) (M8X1.25X60) (INCLS SEAL) (*KIT2, KIT3) (AC–DELCO #24210819)	93	F (MD8)	7	24210819
6.	6–B17	4.226	**SEAL**, A/TRNS FLUID PUMP BOLT (PART OF 5) (AC–DELCO #12337996)	93	F (MD8)	7	12337996
7.		N.S.	**PUMP** (REFER ILLUSTRATION HM 4L60 A.T. OIL PUMP)		.....		
8.	6–B17	4.226	**SEAL**, A/TRNS FLUID PUMP (*KIT2, KIT3) (AC–DELCO #24210605)	93	F (MD8)	1	24210605
9.	6–B17	4.226	**GASKET**, A/TRNS FLUID PUMP (TO CASE) (*KIT2, KIT3) (AC–DELCO #12337931)	93	F (MD8)	1	12337931
10.	6–A16	4.103	**CASE**, A/TRNS (REMAN) (INCL 76, 106) (AC–DELCO #24212145)	93	F (L32, MD8)	1	24212145
	6–A16	4.103	**CASE**, A/TRNS (REMAN) (W/BUSH) (COMPL) (HEAVY–DUTY CASE SERVS ALL MODELS;MAY NEED TO REMOVE EXTRA MTG LUGS FOR FIT) (INCL 76, 106) (AC–DELCO #24212405)	93	F (LT1, MD8)	1	24212405
11.	6–A16	4.104	**PIPE**, A/TRNS VENT (AC–DELCO #24200374)	93	F (MD8)	1	24200374
12.	6–A21	4.128	**FITTING**, TRANS FLUID CLR PIPE (TO CASE) (5/16) (AC–DELCO #8637742)	93	F (MD8)	2	8637742
13.	6–B18	4.228	**RING**, 2–4 BAND SERVO CVR RET (AC–DELCO #8642124) ...	93	F (MD8)	1	8642124
14.	6–B21	4.229	**SEAL**, 2–4 BAND SERVO CVR (O RING) (2ND & 4TH) (PART OF 15) (*KIT2, KIT3) (AC–DELCO #8647351)	93	F (MD8)	1	8647351
15.	6–B18	4.228	**COVER**, 2–4 SERVO (W/SEAL) (INCL 14) (INCLS RING) (4.241) (AC–DELCO #8642979)	93	F (MD8)	1	8642979
16.	6–B18	4.228	**PISTON**, 2–4 BAND SERVO 4TH APPLY (W/RING) (AC–DELCO #8642478)	93	F (MD8)	1	8642478
17.	6–B21	4.229	**RING**, 2–4 BAND SERVO PSTN FLUID SEAL (*KIT2, KIT3) (AC–DELCO #8642480)	93	F (MD8)	1	8642480
18.		8.934	**RETAINER**, SNAP RING BOWED EXT .FITS SHFT 7/16 PL (AC–DELCO #9415640)	93	.....	AR	9415640
19.	6–B22	4.233	**WASHER**, 2–4 BAND SERVO PIN (3/8) (AC–DELCO #8642107)	93	F (MD8)	1	8642107
20.	6–B24	4.246	**SPRING**, LOW & REV BAND SERVO PSTN (AC–DELCO #24207758)	93	F (MD8)	1	24207758

cardiagn.com

21.	6-B21	4.229	**SEAL**, 2-4 BAND SERVO 2ND APPL PSTN HSG (O RING) (*KIT2, KIT3) (AC-DELCO #8642112)	93	F (MD8)	1	8642112
22.	6-B18	4.228	**HOUSING**, 2-4 BAND SERVO 2ND APPL (AC-DELCO #8673039) (ALSO USE SEAL 08642112)	93	F (LT1, MD8)	1	8673039
	6-B18	4.228	**HOUSING**, 2-4 BAND SERVO 2ND APPL (.55) (AC-DELCO #8673041)	93	F (L32, MD8)	1	8673041
23.		N.S.	**RING**, OIL SEAL INR (PART OF 25) (*KIT3, KIT4)				
24.		N.S.	**RING**, SEAL OTR OIL (PART OF 25) (*KIT3, KIT4)				
25.	6-B18	4.228	**PISTON KIT**, 2-4 BAND SERVO 2ND APPLY (INCL 23-4) (YELLOW) (.74) (AC-DELCO #8642079)	93	F (LT1, MD8)	1	8642079
	6-B18	4.228	**PISTON KIT**, 2-4 BAND SERVO 2ND APPLY (INCL 23-4) (W/RINGS) (AC-DELCO #8642613)	93	F (L32, MD8)	1	8642613
26.	6-B22	4.233	**SPRING**, 1-2 BAND SERVO PSTN CUSH (PINK) (AC-DELCO #8642539)	93	F (MD8)	1	8642539
	6-B22	4.233	**SPRING**, 2-4 BAND SERVO PSTN CUSH INR (AC-DELCO #8681195)	93	F (MD8)	1	8681195
27.	6-B22	4.233	**RETAINER**, 1-2 BAND SERVO CUSH SPR (AC-DELCO #8642416)	93	F (MD8)	1	8642416
28.	6-B8	4.176	**RING**, 2-4 BAND SERVO 2ND APPL PSTN RET (AC-DELCO #8642105)	93	F (MD8)	1	8642105
29.	6-B24	4.246	**PIN**, 2-4 BAND SERVO PSTN (I.D BY 1 GROOVE IN TAPPERED POINT) (4.228) (AC-DELCO #8680499)	93	F (MD8)	1	8680499
	6-B24	4.246	**PIN**, 2-4 BAND SERVO PSTN (I.D BY NO GROOVES IN TAPPERED POINT) (4.228) (AC-DELCO #8680501)	93	F (MD8)	1	8680501
	6-B24	4.246	**PIN**, 2-4 BAND SERVO PSTN (I.D BY 2 GROOVES IN TAPERED POINT) (4.228) (AC-DELCO #8680500)	93	F (MD8)	1	8680500
31.	6-B22	4.233	**SPRING**, 2-4 BAND SERVO RTN (ORANGE) (AC-DELCO #8642273)	93	F (MD8)	1	8642273
32.	6-A16	4.104	**PLUG**, A/TRNS FLUID PRESS TEST HOLE (4.265) (AC-DELCO #8654381)	93	F (MD8)	3	8654381
33.	6-A17	4.115	**CONNECTOR**, A/TRNS WRG (5 TERM, W/SEAL) (AC-DELCO #8682294)	93	F (LT1, MD8)	1	8682294

cardiagn.com

	6-A17	4.115	**CONNECTOR**, A/TRNS WRG (W/SEAL CONVR CLU) (ELEC) (3-WAY) (AC-DELCO #8634383)	93	F (L32, MD8)	1	8634383
34.	6-N15	2.530	**SEAL**, A/TRNS WRG CONN (O RING) (.687 I.D. X .1" THK) (*KIT2, KIT3) (4.338) (AC-DELCO #10054241)	93	F	1	10054241
35.	6-C7	4.318	**SEAL**, A/TRNS CASE EXTN (*KIT2, KIT3) (AC-DELCO #1358899)	93	F (MD8)	1	1358899
36.	6-C7	4.317	**EXTENSION**, A/TRNS CASE (REMAN) (INCL 38, 39) (W/ BUSHING ONLY) (AC-DELCO #24214688)	93	F (MD8)	1	24214688
37.		8.900	**BOLT**, M10X1.5X27	93		AR	11503428
		8.900	**BOLT**, HEX M10X1.5X35 10.9 PC (0.029)	93		AR	14060030
38.	6-N28	5.556	**BUSHING**, PROP SHF FRT SLIP YOKE (PART OF 36) (INSIDE DIAM 1.506- 1.504 (PT OF TRANS EXT) (AC-DELCO #24207915)	93	F (MD8)	1	24207915
39.	6-C7	4.318	**SEAL**, PROP SHF FRT SLIP YOKE OIL (PART OF 36) (NON BOOTED) (*KIT2, KIT3) (AC-DELCO #8673526)	93	F (MD8)	1	8673526
40.		N.S.	**RETAINER**, SPEEDO DRVN GR SLV (NOT REQ'D)				
41.		8.900	**BOLT**, HEX W/CON WA M6X1X15 9.8 PZOR 12.5-OD FULL THD (AC-DELCO #8639743)	93		AR	8639743
42.	6-C11	4.338	**SEAL**, SPEEDO DRVN GR SLEV (O RING) (.3" I.D. X .5" O.D.) (ASM) (RUBBER & METAL)) (*KIT2, KIT3) (AC-DELCO #25518664)	93	F (MD8)	1	25518664
43.		N.S.	**SLEEVE**, SPEEDO DRVN (PART OF 44)				
44.		N.S.	**GEAR**, SPEEDO DRVN (SEE SPEEDO GEAR CHART) (INCL 43)				
45.	6-B24	4.256	**GOVERNOR**, (COMPLETE) (AC-DELCO #24201872)	93	F (L32, MD8)	1	24201872
	6-B24	4.256	**GOVERNOR**, A/TRANS (REMAN) (AC-DELCO #24201874)	93	F (LT1, MD8, GU5)	1	24201874
	6-B24	4.256	**GOVERNOR**, A/TRANS (REMAN) (AC-DELCO #24202128)	93	F (LT1, MD8, GU2)	1	24202128
46.	6-B24	4.256	**COVER**, GOV (AC-DELCO #8667827)	93	F (MD8)	1	8667827
47.	6-B13	4.224	**SCREEN**, A/TRNS O/PMP PRESS (CONVR CLU) (4.248) (AC-DELCO #12338044)	93	F (MD8)	2	12338044
	6-B13	4.224	**SCREEN**, A/TRNS O/PMP PRESS (GOV FEED) (4.248) (AC-DELCO #12338044)	93	F (MD8)	2	12338044
48.	6-B21	4.229	**PIN**, 2-4 BAND ANC (AC-DELCO #8654581)	93	F (MD8)	1	8654581

cardiagn.com

49.	6-A19	4.122	**SEAL**, TCC SOL VLV (O RING) (*KIT2, KIT3) (4.123) (AC-DELCO #8630049)	93	F (MD8)	1	8630049
50.	6-A19	4.122	**VALVE**, TCC SOL (INCL 92) (BROWN) (AC-DELCO #10478100)	93	F (L32, MD8)	1	10478100
	6-A19	4.122	**VALVE**, TCC SOL (INCL 92) (AC-DELCO #10478114)	93	F (LT1, MD8, GU2, GU5)	1	10478114
	6-A19	4.122	**VALVE**, TCC SOL (ORANGE) (INCL 92) (AC-DELCO #8654129)	93	F (LT1, MD8)	1	8654129
51.		8.900	**BOLT**, M6X1X12, 10 THD, 11.6 OD, 9.8 GM500-M, POR, MACH (AC-DELCO #11514149)	93	.....	AR	11514149
52.	6-B18	4.228	**PISTON**, 3-4 ACCUM (INCL 53) (AC-DELCO #8663608)	93	F (MD8)	1	8663608
53.	6-B21	4.229	**RING**, 3-4 ACCUM PSTN FLUID SEAL (PART OF 52) (*KIT2, KIT3) (AC-DELCO #24206509)	93	F (MD8)	2	24206509
54.	6-B22	4.233	**SPRING**, 3-4 ACCUM PSTN (YELLOW) (OTR) (AC-DELCO #8663384)	93	F (MD8)	1	8663384
	6-B22	4.233	**SPRING**, 3-4 ACCUM PSTN (ORANGE) (ORANGE) (AC-DELCO #8673387)	93	F (MD8)	2	8673387
	6-B22	4.233	**SPRING**, 3-4 ACCUM PSTN (RED) (AC-DELCO #8634703) ..	93	F (MD8)	1	8634703
55.	6-B25	4.265	**RETAINER**, FWD CLU BALL CHK VLV (AC-DELCO #8679152)	93	F (MD8)	1	8679152
56.	6-B25	4.265	**PLATE**, C/VLV BODY SPCR (AC-DELCO #8681265) (USE ON 3FAM & 3FDM TRANS CODE, FOR 2ND DES SEE 08686001.) ..	93	F (L32, MD8) (1ST DES)	1	8681265
	6-B25	4.265	**PLATE**, C/VLV BODY SPCR (AC-DELCO #8681268)	93	F (LT1, MD8, GU2)	1	8681268
	6-B25	4.265	**PLATE**, C/VLV BODY SPCR (AC-DELCO #8686001) (USED ON 3FXM & 3FRM TRANS CODE, FOR 1ST DES SEE 08681265.) ..	93	F (L32, MD8) (2ND DES)	1	8686001
	6-B25	4.265	**PLATE**, C/VLV BODY SPCR (AC-DELCO #8686065)	93	F (LT1, MD8, GU5)	1	8686065
59.	6-B22	4.233	**SPRING**, 1-2 ACCUM (VIOLET) (OTR) (AC-DELCO #24209794) .	93	F (MD8)	1	24209794
	6-B22	4.233	**SPRING**, 1-2 ACCUM (YELLOW) (OTR) (AC-DELCO #8663384) ..	93	F (MD8)	1	8663384
60.	6-B21	4.229	**RING**, 1-2 ACCUM PSTN FLUID SEAL (PART OF 61) (*KIT2, KIT3, KIT5) (AC-DELCO #24206509) .	93	F (MD8)	2	24206509
61.	6-B18	4.228	**PISTON**, 1-2 ACCUM (INCL 60) (*KIT5) (AC-DELCO #8663608) .	93	F (MD8)	1	8663608
62.	6-B18	4.228	**COVER**, 1-2 ACCUM (AC-DELCO #8683543)	93	F (MD8)	1	8683543
63.		8.900	**BOLT**, HFH M6X1X65 9.8 PL	93	.....	AR	11506078
64.	6-C5	4.275	**LINK**, T/V CBL (AC-DELCO #8642290)	93	F (MD8)	1	8642290
65.	6-C5	4.275	**LEVER**, T/V (AC-DELCO #8673606)	93	F (MD8)	1	8673606

cardiagn.com

66.	6-N20	2.559	CLIP, A/TRNS WRG HARN (4.197) (AC-DELCO #8673068) .	93	F (MD8)	2	8673068
67.	6-B25	4.265	VALVE KIT, CONT (W/BODY & VLV) (AC-DELCO #8683047) ...	93	F (L32, MD8) (EXC VP6)	1	8683047
	6-B25	4.265	VALVE KIT, CONT (W/BODY & VLV) (AC-DELCO #8684016) ...	93	F (L32, MD8, VP6) (EXPORT)	1	8684016
69.		8.900	BOLT, HEX M6X1X50 10.9 PL (AC-DELCO #11503861)	93	.....	AR	11503861
70.	6-B17	4.226	SEAL, A/TRNS FLUID FLTR (O RING) (PART OF 71) (*KIT2, KIT3) (4.197) (AC-DELCO #8657767) .	93	F (MD8)	1	8657767
71.	6-B12	4.197	FILTER KIT, A/TRNS FLUID (W/SEAL & GSKT) (INCL 70, 72) (*KIT2, KIT3) (AC-DELCO #8657926)	93	F (MD8)	1	8657926
72.	6-B11	4.196	GASKET, A/TRNS FLUID PAN (ALSO PART OF 71, 73) (*KIT2, KIT3) (AC-DELCO #8654799) ...	93	F (MD8)	1	8654799
73.	6-B11	4.195	PAN KIT, A/TRNS FLUID (INCL 72, 93) (SHALLOW W/PAN, GSKT & MAGNET, DRAIN PLUG NOT INCLUDED) (AC-DELCO #8663948)	93	F (MD8)	1	8663948
74.		8.900	BOLT, W/CON SPR WA, M8X1.25X20, 9.8, ZO (1.270) (AC-DELCO #15614709)	93	.....	AR	15614709
75.		8.900	BOLT-HEX, M8X1.25X20, 16.88 THD, GM500 (10.9), PZOR, MACH (AC-DELCO #11508687)	93	.....	AR	11508687
76.		N.S.	BUSHING, PROP SHF FRT SLIP YOKE (PART OF 10)		.....		
	6-N28	5.556	BUSHING, PROP SHF FRT SLIP YOKE (PART OF 10) (INSIDE DIA 1.506-1.509) (PART OF TRANS CASE) (4.104) (AC-DELCO #8680027)	93	F (MD8)	1	8680027
77.	6-B18	4.228	PIN, FWD CLU ACCUM PSTN (4.226) (AC-DELCO #8628273) .	93	F (MD8)	2	8628273
80	6-B18	4.228	VALVE, 3RD ACCUM BALL CHK (W/BALL) (AC-DELCO #8634400)	93	F (MD8)	1	8634400
81.	6-A17	4.105	ORIFICE, 3RD ACCUM BL (6.4MM DIA) (NO DIMPLE) (4.104) (AC-DELCO #8628864) .	93	F (MD8)	2	8628864
82.		8.939	PIN, SPR COILED 125X.625 PL (PART OF 83) (AC-DELCO #273337)	93	.....	AR	273337
83.	6-B24	4.256	GEAR, GOV DRV (INCL 82) (GREEN) (AC-DELCO #8663995)	93	F (MD8)	1	8663995
84.	6-B24	4.256	PIN, GOV WT (AC-DELCO #8663706)	93	F (MD8)	2	8663706
85.	6-B24	4.256	CAP, GOV THR (AC-DELCO #6261239)	93	F (MD8)	1	6261239
86.	6-A17	4.105	ORIFICE, FWD CLU FEED (6.4MM DIA) (NO DIMPLE) (4.104) (AC-DELCO #8628864) .	93	F (MD8)	1	8628864
88.		N.S.	GASKET, VLV BODY UPR (*KIT1)		.....		

cardiagn.com

89.		N.S.	**GASKET**, VLV BODY LWR (*KIT1)				
90.	6-B17	4.226	**BUSHING**, INPUT SHF RR (AC-DELCO #8642904)	93	F (MD8)	1	8642904
91.		8.899	**BALL**, 5/16 CHROME STEEL (AC-DELCO #104919)	93		AR	104919
92.		N.S.	**CONDUIT**, SOL WIRE (PART OF 50)				
93.	6-B11	4.195	**MAGNET**, A/TRNS FLUID PAN (ALSO PART OF 73) (4.105) (AC-DELCO #8665830)	93	F (MD8)	1	8665830
94.	6-B17	4.226	**RETAINER**, T/CV FLUID SEAL (AC-DELCO #8654491)	93	F (MD8)	1	8654491
96.	6-B25	4.265	**PIPE**, AUX C/VLV BODY (AC-DELCO #8663615)	93	F (MD8)	1	8663615
97.	6-B13	4.216	**RETAINER**, AUX C/VLV BODY PIPE (FLAT) (4.265) (AC-DELCO #8667679)	93	F (MD8)	1	8667679
	6-B13	4.216	**RETAINER**, AUX C/VLV BODY PIPE (CURVED) (4.265) (AC-DELCO #8673044)	93	F (MD8)	1	8673044
99.		N.S.	**SENSOR**, SPD INT TRANS (NOT AVAIL ON SOME MDLS)				
100.		N.S.	**BOLT**, SENSOR RET (TRUCK ONLY)				
106.	6-B9	4.180	**VALVE**, A/TRNS FLUID/PUMP CVR BALL CHK (PART OF 10) (SINGLE ORIFICE) (TALL & NARROW) (4.226) (AC-DELCO #8628732)	93	F (MD8)	2	8628732
	6-B9	4.180	**VALVE**, A/TRNS FLUID/PUMP CVR BALL CHK (PART OF 10) (DOUBLE ORIFICE) (W/BALL) (AC-DELCO #8663890)	93	F (MD8)	3	8663890
359.	6-A17	4.105	**ORIFICE**, FWD CLU FEED (9.12 MM DIA) (1 DIMPLE) (4.265) (AC-DELCO #8667040)	93	F (MD8)	1	8667040
	6-A17	4.105	**ORIFICE**, FWD CLU FEED (2 DIMPLES) (4.265) (AC-DELCO #8663601)	93	F (MD8)	1	8663601
372.	6-A14	4.054	**SWITCH** TCC TEMP (NOT AVAIL ON SOME MDLS) (AC-DELCO #8673634)	93	F (MD8)	1	8673634
374.	6-B25	4.265	**BOLT**, AUX C/VLV BODY (M6X1X24) (4.228) (AC-DELCO #8667821)	93	F (MD8)	1	8667821
375.		8.900	**BOLT**, HEX M6X1X35 10.9 PC (AC-DELCO #11503870)	93		AR	11503870
376.		8.900	**BOLT**, HEX WA HD, M6X1X7.4 (AC-DELCO #8667680)	93		AR	8667680
377.	6-B25	4.265	**BODY**, AUX C/VLV (WHITE) (AC-DELCO #8667822) (USE ON 3FAM & 3FDM TRANS CODE, FOR 2ND DES SEE 08686002.)	93	F (L32, MD8) (1ST DES)	1	8667822
	6-B25	4.265	**BODY**, AUX C/VLV (AC-DELCO #8686002) (USE ON 3FXM & 3FRM TRANS CODE, FOR 1ST DES SEE 08667822.)	93	F (L32, MD8) (2ND DES)	1	8686002

cardiagn.com

	6-B25	4.265	BODY, AUX C/VLV (REMAN) (AC-DELCO #24205606)	93	F (LT1, MD8)	1	24205606
709.	6-C5	4.275	DETENT, MAN SHFT (AC-DELCO #8642247)	93	F (MD8)	1	8642247

SERVICE KITS

1.	6-B25	4.265	GASKET KIT, C/VLV BODY SPCR PLT (INCL 88, 89.) (AC-DELCO #8689949)	93	F (MD8)	1	8689949
2.	6-A12	4.005	GASKET KIT, A/TRNS (W/SEALS) (INCL 2, 5, 8, 9, 14, 17, 21, 23, 24, 34, 35, 39, 42, 49, 53, 60, 70-2.) (W/O PLATES OR PISTONS) (AC--DELCO #24201804)	93	F (MD8)	1	24201804
3.		N.S.	TRANSMISSION KIT, AUTO (SERV OVERHAUL W/PLT, GSKT, SEAL) (USE 24201804 GASKET KIT T/W 24201806 (TRAN CODE 1FUM) OR 24201807 (TRAN CODE 1FYM) PLATE KIT T/W 24204495 PISTON KIT.)		.....		
4.	6-B21	4.229	RING KIT, 2--4 BAND SERVO 2ND APPL PSTN FLUID SEAL (INCL 23, 24) (.74 RATIO) (INCLS 2 RINGS) (AC--DELCO #8642925)	93	F (MD8)	1	8642925
5.	6-B18	4.228	PISTON KIT, 1-2 & 3-4 ACCUM (INCL 60-1) (W/SEALS) (AC-DELCO #24204495)	93	F (MD8)	1	24204495

RPO DEFINITIONS
GU2 - AXLE,REAR,2.73 RATIO
GU5 - AXLE,REAR,3.23 RATIO
LT1 - ENGINE-GAS, 8 CYL, 5.7L(5.7P),MFI,HO
L32 - ENGINE,3.4L,V6,(3.4S),SFI,OHV
MD8 - TRANSMISSION,AUTOMATIC 4--SPEED(THM700R4/4L60)
VP6 - NOISE LEVEL CONTROL

cardiagn.com

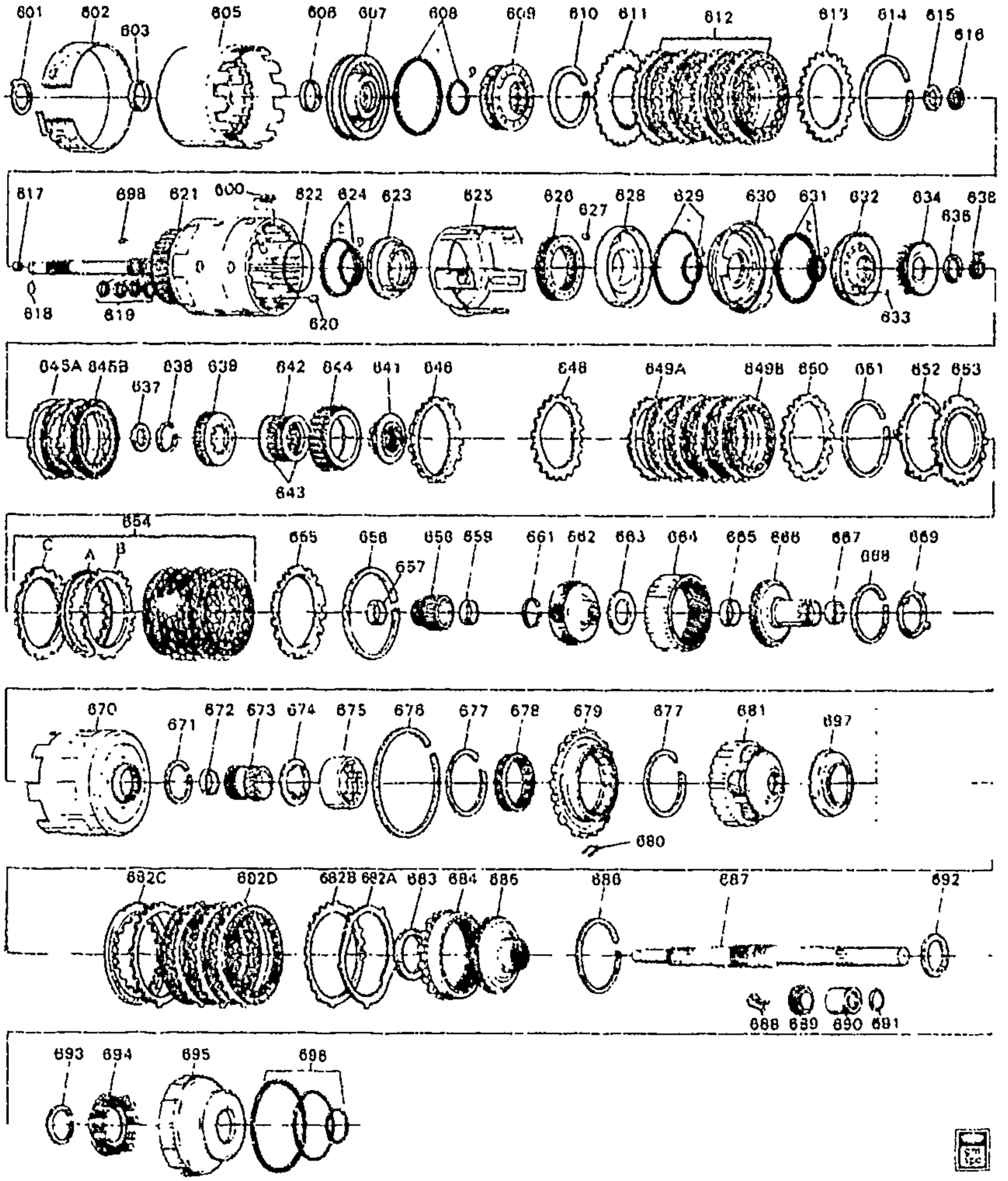

GM04-272F

1993 F AUTOMATIC TRANSMISSION (MD8) PART 2 HM 4L60 INTERNAL POWER TRAIN PARTS

600.	6-A24	4.163	SPRING, 3RD & 4TH CLU BOOST (INCLS RET & (2) SPRNGS) (AC-DELCO #8667424)	93 F (MD8)	AR	8667424
601.	6-B10	4.189	WASHER, REV INPUT CLU HSG THR (DRUM TO OIL PUMP THR) (4.226) (AC-DELCO #08642041)	93 F (MD8)	1	8642041

cardiagn.com

	6-B10	4.189	**WASHER**, REV INPUT CLU HSG THR (TO STATOR SHF) (1.87-1.97MM) (4.158) (AC-DELCO #8642067)	93	F (MD8)	1	8642067
	6-B10	4.189	**WASHER**, REV INPUT CLU HSG THR (TO STATOR SHF) (2.04-2.14MM) (4.158) (AC-DELCO #8642068)	93	F (MD8)	1	8642068
	6-B10	4.189	**WASHER**, REV INPUT CLU HSG THR (TO STATOR SHF) (2.21-2.31MM) (4.158) (AC-DELCO #8642069)	93	F (MD8)	1	8642069
	6-B10	4.189	**WASHER**, REV INPUT CLU HSG THR (TO STATOR SHF) (2.38-2.48MM) (4.158) (AC-DELCO #8642070)	93	F (MD8)	1	8642070
	6-B10	4.189	**WASHER**, REV INPUT CLU HSG THR (TO STATOR SHF) (2.55-2.65MM) (4.158) (AC-DELCO #8642071)	93	F (MD8)	1	8642071
	6-B10	4.189	**WASHER**, REV INPUT CLU HSG THR (TO STATOR SHF) (2.72-2.82MM) (4.158) (AC-DELCO #8642072)	93	F (MD8)	1	8642072
	6-B10	4.189	**WASHER**, REV INPUT CLU HSG THR (TO STATOR SHF) (2.89-2.99MM) (4.158) (AC-DELCO #8642073)	93	F (MD8)	1	8642073
	6-B10	4.189	**WASHER**, REV INPUT CLU HSG THR (TO STATOR SHF) (3.06-3.16MM) (4.158) (AC-DELCO #8642074)	93	F (MD8)	1	8642074
602.	6-B24	4.251	**BAND**, 2-4 (4.163) (AC-DELCO #8673175)	93	F (MD8)	1	8673175
603.	6-B9	4.180	**BUSHING**, REV INPUT CLU HSG FRT (PART OF 605) (AC-DELCO #8642905)	93	F (MD8)	1	8642905
605.	6-B7	4.169	**HOUSING**, REV INPUT CLU (W/DRUM&RET) (INCL 603, 606) (AC-DELCO #8681295)	93	F (MD8)	1	8681295
606.	6-B7	4.169	**BUSHING**, REV INPUT CLU HSG RR (PART OF 605) (AC-DELCO #8628917)	93	F (MD8)	1	8628917
607.	6-B5	4.166	**PISTON**, REV INPUT CLU (.095 HOLE) (AC-DELCO #8667841)	93	F (LT1, MD8)	1	8667841
	6-B5	4.166	**PISTON**, REV INPUT CLU (AC-DELCO #8663071) (USED ON 3FAM & 3FDM TRANS CODE, FOR 2ND DES SEE 08685895.) .	93	F (L32, MD8) (1ST DES)	1	8663071
	6-B5	4.166	**PISTON**, REV INPUT CLU (AC-DELCO #8685895) (USED ON 3FXM & 3FRM TRANS CODE, FOR 1ST DES SEE 08663071.) ..	93	F (L32, MD8) (2ND DES)	1	8685895
608.	6-B5	4.166	**SEAL KIT**, REV INPUT CLU (INCLS SEALS) (*KIT3, KIT4) (AC-DELCO #8657922)	93	F (MD8)	1	8657922
609.	6-B5	4.164	**SPRING**, REV INPUT CLU (AC-DELCO #8647284)	93	F (MD8)	1	8647284

cardiagn.com

610.	6-B5	4.164	RING, REV INPUT CLU SPR RET (SNAP) (*KIT2) (AC-DELCO #8628059)	93	F (MD8)	1	8628059
611.	6-A24	4.163	PLATE, REV INPUT CLU (W/ HOLES IN TURB PLATES) (AC-DELCO #24205267)	93	F (MD8)	AR	24205267
	6-A24	4.163	PLATE, REV INPUT CLU (WAVED) (AC-DELCO #8663074)	93	F (LT1, MD8)	1	8663074
	6-A24	4.163	PLATE, REV INPUT CLU (WAVED) (AC-DELCO #8663074) (USED ON 3FAM & 3FDM TRANS CODE, FOR 2ND DES SEE 08685893.)	93	F (L32, MD8) (1ST DES)	1	8663074
	6-A24	4.163	PLATE, REV INPUT CLU (WAVED) (AC-DELCO #8685893) (USED ON 3FXM & 3FRM TRANS CODE, FOR 1ST DES SEE 08663074.)	93	F (L32, MD8) (2ND DES)	1	8685893
612.	6-A24	4.163	PLATE, REV INPUT CLU (153MM DIA) (*KIT4, KIT9) (AC-DELCO #8673605)	93	F (MD8)	AR	8673605
613.	6-A24	4.163	PLATE, REV INPUT CLU BKG (7.25-7.41MM) (AC-DELCO #8682863)	93	F (LT1, MD8)	1	8682863
	6-A24	4.163	PLATE, REV INPUT CLU BKG (7.25-7.41MM) (AC-DELCO #8682863) (USED ON 3FAM & 3FDM TRANS CODE, FOR 2ND DES SEE 24213048.)	93	F (L32, MD8) (1ST DES)	1	8682863
	6-A24	4.163	PLATE, REV INPUT CLU BKG (6.52-6.68MM) (AC-DELCO #8682864)	93	F (LT1, MD8)	1	8682864
	6-A24	4.163	PLATE, REV INPUT CLU BKG (6.52-6.68MM) (AC-DELCO #8682864) (USED ON 3FAM & 3FDM TRANS CODE, FOR 2ND DES SEE 24213046.)	93	F (L32, MD8) (1ST DES)	1	8682864
	6-A24	4.163	PLATE, REV INPUT CLU BKG (5.79-5.95MM) (AC-DELCO #8682865)	93	F (LT1, MD8)	1	8682865
	6-A24	4.163	PLATE, REV INPUT CLU BKG (5.79-5.95MM) (AC-DELCO #8682865) (USE ON 3FAM & 3FDM TRANS CODE, FOR 2ND DES SEE 24213047)	93	F (L32, MD8) (1ST DES)	1	8682865
	6-A24	4.163	PLATE, REV INPUT CLU BKG (7.045-7.211MM) (AC-DELCO #24213046) (USED ON 3FXM & 3FRM TRANS CODE, FOR 1ST DES SEE 08682864.)	93	F (L32, MD8) (2ND DES)	1	24213046
	6-A24	4.163	PLATE, REV INPUT CLU BKG (6.270-6.436MM) (AC-DELCO #24213047) (USED ON 3FXM & 3FRM TRANS CODE, FOR 1ST DES SEE 08682864)	93	F (L32, MD8) (2ND DES)	1	24213047

cardiagn.com

	6-A24	4.163	**PLATE**, REV INPUT CLU BKG (AC-DELCO #24213048) (USED ON 3FXM & 3FRM TRANS CODE, FOR 1ST DES SEE 08682863.) ..	93	F (L32, MD8) (2ND DES)	1	24213048
614.	6-B5	4.164	**RING**, REV INPUT CLU BKG PLT RET (YELLOW) (AC-DELCO #8667022)	93	F (MD8)	1	8667022
615.	6-A24	4.162	**BEARING**, REV INPUT CLU HSG THR (STATOR SHF) (TO SEL WA) (AC-DELCO #8642066)	93	F (MD8)	1	8642066
616.	6-B10	4.189	**WASHER**, REV INPUT CLU HSG THR (DRUM TO OIL PUMP THR) (4.226) (AC-DELCO #08642041)	93	F (MD8)	1	8642041
	6-B10	4.189	**WASHER**, REV INPUT CLU HSG THR (TO STATOR SHF) (1.87-1.97MM) (4.158) (AC-DELCO #8642067)	93	F (MD8)	1	8642067
	6-B10	4.189	**WASHER**, REV INPUT CLU HSG THR (TO STATOR SHF) (2.04-2.14MM) (4.158) (AC-DELCO #8642068)	93	F (MD8)	1	8642068
	6-B10	4.189	**WASHER**, REV INPUT CLU HSG THR (TO STATOR SHF) (2.21-2.31MM) (4.158) (AC-DELCO #8642069)	93	F (MD8)	1	8642069
	6-B10	4.189	**WASHER**, REV INPUT CLU HSG THR (TO STATOR SHF) (2.38-2.48MM) (4.158) (AC-DELCO #8642070)	93	F (MD8)	1	8642070
	6-B10	4.189	**WASHER**, REV INPUT CLU HSG THR (TO STATOR SHF) (2.55-2.65MM) (4.158) (AC-DELCO #8642071)	93	F (MD8)	1	8642071
	6-B10	4.189	**WASHER**, REV INPUT CLU HSG THR (TO STATOR SHF) (2.72-2.82MM) (4.158) (AC-DELCO #8642072)	93	F (MD8)	1	8642072
	6-B10	4.189	**WASHER**, REV INPUT CLU HSG THR (TO STATOR SHF) (2.89-2.99MM) (4.158) (AC-DELCO #8642073)	93	F (MD8)	1	8642073
	6-B10	4.189	**WASHER**, REV INPUT CLU HSG THR (TO STATOR SHF) (3.06-3.16MM) (4.158) (AC-DELCO #8642074)	93	F (MD8)	1	8642074
617.	6-A20	4.123	**VALVE**, TURB SHF BALL CHK (YELLOW) (RET) (AC-DELCO #8639284)	93	F (LT1, MD8)	1	8639284
	6-A20	4.123	**VALVE**, TURB SHF BALL CHK (RET) (YELLOW) (AC-DELCO #8647037)	93	F (L32, MD8)	1	8647037
618.	6-A20	4.123	**SEAL**, INPUT SHF (O RING) (TO SEL WA) (AC-DELCO #8630049)	93	F (LT1, MD8)	1	8630049
	6-A20	4.123	**SEAL**, TURB SHF (O RING) (TO SEL WA) (AC-DELCO #8662686)	93	F (L32, MD8)	1	8662686

cardiagn.com

619.	6-A20	4.123	RING, INPUT SHF FLUID SEAL (TEFLON) (*KIT3, KIT4) (AC-DELCO #8667035)	93	F (MD8)	4	8667035
620.	6-A20	4.123	VALVE, 3-4 CLU HSG BALL CHK (AC-DELCO #24208262)	93	F (MD8)	1	24208262
621.	6-A23	4.158	HOUSING, INPUT CLU (W/INPUT SHF) (AC-DELCO #8667661) ...	93	F (L32, MD8)	1	8667661
	6-A23	4.158	HOUSING, 3-4 CLU (W/INPUT SHF) (AC-DELCO #8667659) ...	93	F (LT1, MD8)	1	8667659
622.		N.S.	SEAL, INPUT TO FWD HSG O RING (*KIT1, KIT3, KIT4)		.....		
623.	6-B5	4.166	PISTON, 3-4 CLU (INPUT) (AC-DELCO #24200290)	93	F (MD8)	1	24200290
624.		N.S.	SEAL, 3RD & 4TH CLU INR & OTR (*KIT1, KIT3, KIT4)		.....		
625.	6-B7	4.167	RING, 3-4 CLU APPL (W/JULIAN DATE 005-230) (*KIT8) (AC-DELCO #8685043)	93	F (MD8)	1	8685043
626.	6-B7	4.167	SPRING, 3-4 CLU (105.12MM O.D.) (AC-DELCO #8685244) ..	93	F (MD8)	1	8685244
627.	6-A20	4.123	VALVE, FWD CLU HSG BALL CHK (PART OF 628) (RET) (4.169) (AC-DELCO #8654438) .	93	F (MD8)	1	8654438
628.	6-B7	4.169	HOUSING, FWD CLU (W/INPUT SHF) (INCL 627) (AC-DELCO #8654326)	93	F (MD8)	1	8654326
629.		N.S.	SEAL, FWD CLU (*KIT1, KIT3, KIT4)		.....		
630.	6-B5	4.166	PISTON, FWD CLU (AC-DELCO #8683513)	93	F (MD8)	1	8683513
631.		N.S.	SEAL, OVERRUN CLU INR & OTR (*KIT1, KIT3, KIT4)		.....		
632.	6-B5	4.166	PISTON, OVERRUN CLU (INCL 633) (ALUMINUM TYPE W/REMOVABLE SEAL) (AC-DELCO #8642148)	93	F (MD8)	1	8642148
633.		8.899	BALL, SPECIAL, 3/16 STEEL (PART OF 632) (AC-DELCO #7002117)	93	....	AR	7002117
634.	6-A24	4.163	SPRING, OVERRUN CLU (AC-DELCO #8677876)	93	F (MD8)	1	8677876
635.		8.934	RING, EXT SNAP FITS M38 DIA SHT .PL (*KIT2)	93	.....	AR	11500692
636.	6-B8	4.176	SEAL, OUTPUT SHF (INPUT HSG TO OUTPUT) (*KIT1, KIT3, KIT4) (AC-DELCO #8677268)	93	F (MD8)	1	8677268
637.	6-A23	4.159	BEARING, INPUT SUN GR THR (AC-DELCO #8642162)	93	F (MD8)	1	8642162
638.	6-B9	4.180	RING, OVERRUN CLU HUB RET (SNAP) (*KIT2) (AC-DELCO #8647083)	93	F (MD9)	1	8647083
639.		N.S.	HUB, OVERRUN CLU (PART OF 642)		.....		
641.		N.S.	RETAINER, FWD CLU SPRAG INR-W/RACE (PART OF 642) ...		....		

cardiagn.com

642.	6-B5	4.164	CLUTCH, FWD RLR (INCL 639, 641, 643-4) (HIGH SPD, INCLS INPUT SUN GEAR) (AC-DELCO #24210960)	93	F (MD8)	1	24210960
643.		N.S.	RETAINER, SPRAG (PART OF 642)				
644.		N.S.	RACE, FWD CLU SPRAG OTR (PART OF 642)				
645.	6-A24	4.163	PLATE, OVERRUN CLU (A) (FIBER) (1.93-2.13 THK) (GROOVED) (*KIT4) (AC-DELCO #8673253)	93	F (MD8)	2	8673253
	6-A24	4.163	PLATE, OVERRUN CLU (B) (2.34MM THK) (FLAT STEEL) (AC-DELCO #8642154)	93	F (MD8)	2	8642154
646.	6-A24	4.163	PLATE, FWD CLU APPLY (AC-DELCO #8682866)	93	F (LT1, MD8)	1	8682866
	6-A24	4.163	PLATE, FWD CLU APPLY (AC-DELCO #8682866) (USED ON 3FAM & 3FDM TRANS CODE, FOR 2ND DES SEE 08685049.)	93	F (L32, MD8) (1ST DES)	1	8682866
	6-A24	4.163	PLATE, FWD CLU APPLY (AC-DELCO #8685049) (USE ON 3FXM & 3FRM TRANS CODE, FOR 1ST DES SEE 08682866.)	93	F (L32, MD8) (2ND DES)	1	8685049
648.	6-A24	4.163	PLATE, FWD CLU (WAVED) (AC-DELCO #8647058)	93	F (LT1, MD8)	1	8647058
	6-A24	4.163	PLATE, FWD CLU (WAVED) (AC-DELCO #8647058) (USE ON 3FAM & 3FDM TRANS CODE, FOR 2ND DES SEE 08685050.)	93	F (L32, MD8) (1ST DES)	1	8647058
	6-A24	4.163	PLATE, FWD CLU (WAVED) (AC-DELCO #8685050) (USED ON 3FXM & 3FRM TRANS CODE, FOR 1ST DES SEE 08647058)	93	F (L32, MD8) (2ND DES)	1	8685050
649.	6-A24	4.163	PLATE, FWD CLU (STEEL) (*KIT4, KIT7, KIT9) (AC-DELCO #8654325)	93	F (MD8)	AR	8654325
	6-A24	4.163	PLATE, FWD CLU (FIBER) (*KIT4, KIT7) (AC-DELCO #8673254)	93	F (MD8)	5	8673254
650.	6-A24	4.163	PLATE, FWD CLU BKG (7.55MM-7.85MM) (AC-DELCO #24212467)	93	F (MD8)	1	24212467
	6-A24	4.163	PLATE, FWD CLU BKG (6.92-7.07MM) (ID A) (AC-DELCO #8682867)	93	F (MD8)	1	8682867
	6-A24	4.163	PLATE, FWD CLU BKG (8.73-9.03MM) (ID B) (AC-DELCO #8682868)	93	F (MD8)	1	8682868
	6-A24	4.163	PLATE, FWD CLU BKG (4.56-4.71MM) (ID E) (AC-DELCO #8682871)	93	F (MD8)	1	8682871
	6-A24	4.163	PLATE, FWD CLU BKG (8.14MM-8.44MM) (AC-DELCO #24212468)	93	F (MD8)	1	24212468
651.	6-A24	4.163	RING FWD CLU BKG PLT RET (AC-DELCO #8642170)	93	F (MD8)	1	8642170

cardiagn.com

652.		DISCON	PLATE, 3-4 CLU (*KIT8)	93	F (MD8)	1	8642171
653.		N.S.	PLATE, 3-4 CLU APPLY (*KIT8) .		.....		
654.	6-A24	4.163	PLATE, 3-4 CLU (A) (HAS 2050 STAMPED ON PART) (*KIT 1, KIT9) (AC-DELCO #8679390) ...	93	F (MD8)	6	8679390
	6-A24	4.163	PLATE, 3-4 CLU (B) (2.71MM (STEEL) (5 LG SPACES EQUAL SPACED BETWEEN CLSTR OF SMALL TEETH) (*KIT6, KIT8) (AC-DELCO #8685045)	93	F (MD8)	AR	8685045
		DISCON	PLATE, 3-4 CLU (C) (*KIT6, KIT8)	93	F (MD8)	AR	8678054
655.	6-A24	4.163	PLATE, 3-4 CLU BKG (4.92-.72MM) (AC-DELCO #8667537)	93	F (MD8)	1	8667537
	6-A24	4.163	PLATE, 3-4 CLU BKG (USE ON 93 TRANS W/JULIAN DATE 005-230) (ID BY 3 DIMPLES) (AC-DELCO #8685046)	93	F (MD8)	1	8685046
	6-A24	4.163	PLATE, 3-4 CLU BKG (USE ON 93 TRANS W/JULIAN DATE 005-230) (4.79-4.99MM THK) (AC-DELCO #24211896)	93	F (MD8)	1	24211896
	6-A24	4.163	PLATE, 3-4 CLU BKG (USE ON 93 TRANS W/JULIAN DATE 005-230) (3.90MM-4.10MM) (AC-DELCO #24212459)	93	F (MD8)	1	24212459
656.	6-A24	4.163	RING, 3-4 CLU BKG PLT RET (AC-DELCO #8663636)	93	F (MD8)	1	8663636
657.	6-A23	4.159	BUSHING, INPUT SUN GR FRT (FRONT) (PART OF 658) (FRT & RR) (AC-DELCO #8642181) ...	93	F (MD8)	1	8642181
658.	6-A23	4.159	GEAR, INPUT SUN (INCL 657, 659) (AC-DELCO #24213007) ..	93	F (MD8)	1	24213007
659.	6-A23	4.159	BUSHING, INPUT SUN GR FRT (REAR) (ALSO PART OF 658) (FRT & RR) (AC-DELCO #8642181)	93	F (MD8)	1	8642181
661.	6-B8	4.176	RING, OUTPUT SHF RET (TO INPUT CARR) (*KIT2, KIT3, KIT4) (AC-DELCO #8654141)	93	F (MD8)	1	8654141
662.	6-B8	4.175	CARRIER, INPUT (COMPL) (AC-DELCO #24212177)	93	F (MD8)	1	24212177
663.	6-A23	4.159	BEARING, INT REACTION GR SUPT THR (TO CASE) (AC-DELCO #8642191)	93	F (MD8)	1	8642191
664.	6-A23	4.158	GEAR, INPUT INTL (AC-DELCO #8663639)	93	F (MD8)	1	8663639
665.	6-B8	4.176	BUSHING, REACTION CARR SHF FRT (PART OF 666) (AC-DELCO #8642908)	93	F (MD8)	1	8642908
666.	6-B8	4.175	SHAFT, REACTION CARR (INCL 665, 667) (AC-DELCO #8681518)	93	F (MD8)	1	8681518
667.	6-B8	4.176	BUSHING, REACTION CARR SHF RR (ALSO PART OF 666) (AC-DELCO #8642907)	93	F (MD8)	1	8642907

cardiagn.com

668.	6-B8	4.176	RING, REACTION CARR SHF RET (TO INT GR) (AC-DELCO #8642201)	93	F (MD8)	1	8642201
669.	6-B8	4.176	WASHER, REACTION CARR SHF THR (TO SHELL) (08642202 TO BE USED ONLY WITH 08683439) (AC-DELCO #8642202)	93	F (MD8)	1	8642202
670.	6-B8	4.175	SHELL, REACTION SUN GR (AC-DELCO #8683439)	93	F (MD8)	1	8683439
671.	6-A23	4.159	RING, REACTION SUN GR RET (*KIT2, KIT5) (AC-DELCO #8681553)	93	F (MD8)	1	8681553
672.	6-B8	4.176	BUSHING, REACTION SUN GR (AC-DELCO #8642909)	93	F (MD8)	1	8642909
673.	6-A23	4.159	GEAR, REACTION SUN (INCLS BUSH & GEAR) (INDIVIDUAL COMPONENTS NOT SOLD SEPARATELY) (AC-DELCO #8642204)	93	F (MD8)	1	8642204
674.	6-A23	4.159	WASHER, REACTION SUN GR SHELL THR (4.176) (AC-DELCO #8642331)	93	F (MD8)	1	8642331
675.	6-B9	4.180	RACE, LOW CLU RLR INR (OVERRUN CLU) (AC-DELCO #8673300)	93	F (MD8)	1	8673300
676.	6-B9	4.180	RING, LOW & REV CLU SUPT RET (AC-DELCO #24200278)	93	F (MD8)	1	24200278
677.	6-B9	4.180	RING, LOW CLU RLR RET (ROLLER ASSY/CAM) (AC-DELCO #6261051)	93	F (MD8)	1	6261051
678.	6-B5	4.166	SUPPORT, LOW & REV CLU (INCL 679) (*KIT5) (4.180) (AC-DELCO #8681727)	93	F (MD8)	1	8681727
679.		N.S.	SUPPORT, LO & REV CLU (PART OF 678) (*KIT5)				
680.	6-B9	4.180	SPRING, LOW & REV CLU SUPT (RET) (AC-DELCO #6261415)	93	F (MD8)	1	6261415
681.	6-B8	4.175	CARRIER, REACTION (INCL 697) (AC-DELCO #8654200)	93	F (MD8)	1	8654200
682.	6-A24	4.163	PLATE, LOW & REV CLU (WAVED) (A) (*KIT4, KIT5) (AC-DELCO #8676362)	93	F (MD8)	1	8676362
	6-A24	4.163	PLATE, LOW & REV CLU (ID 1, 5, 9) (B) (2.344MM) (HAS HOLES IN TURB PLATES) (*KIT5) (AC-DELCO #24205270)	93	F (MD8)	1	24205270
	6-A24	4.163	PLATE, LOW & REV CLU (ID 4, 8, 0) (B) (1.314MM) (SELECTIVE) (*KIT5) (AC-DELCO #8680440)	93	F (MD8)	1	8680440
	6-A24	4.163	PLATE, LOW & REV CLU (FIBRE) (C) (NON-SEGMENTED COMPLETE SET OF 5) (*KIT5, KIT9) (AC-DELCO #8684089)	93	F (MD8)	1	8684089
	6-A24	4.163	PLATE, LOW & REV CLU SPCR (ID BLANK) (D) (1.829MM) (HAS HOLES IN TURB PLATES) (STEEL) (*KIT5) (AC-DELCO #24205268)	93	F (MD8)	1	24205268

cardiagn.com

683.	6-A23	4.159	BEARING, REACTION CARR THR (4.176) (AC-DELCO #8642215)	93	F (MD8)	1	8642215
	6-A23	4.159	BEARING, DIFF CARR SUN GR THR (AC-DELCO #8646254) ...	93	F (MD8)	1	8646254
684.	6-A23	4.158	GEAR, REACTION INTL (AC-DELCO #8667055)	93	F (MD8)	1	8667055
685.	6-B8	4.175	SUPPORT, REACTION INTL GR (AC-DELCO #8681491)	93	F (MD8)	1	8681491
686.	6-B8	4.176	RING, INT REACTION GR SUPT RET (AC-DELCO #8642220) ...	93	F (MD8)	1	8642220
687.	6-B8	4.175	SHAFT, OUTPUT (REMAN) (AC-DELCO #24218771)	93	F (MD8)	1	24218771
688.	6-C11	4.345	CLIP, SPEEDO DRV GR (AC-DELCO #6261781)	93	F (MD8)	1	6261781
689.	6-C11	4.343	GEAR, SPEEDO SEN (17 TEETH, RED) (AC-DELCO #8640517) ...	93	F (MD8)	1	8640517
690.		N.S.	SLEEVE, (TRUCK ONLY)		.....		
691.		N.S.	SEAL, (TRUCK ONLY)		.....		
692.	6-A23	4.159	BEARING, INT REACTION GR SUPT THR (TO CASE) (AC-DELCO #8642191)	93	F (MD8)	1	8642191
693.	6-B5	4.164	RING, LOW & REV CLU PLT RET (*KIT2, KIT5) (4.159) (AC-DELCO #8647337)	93	F (MD8)	1	8647337
694.	6-B5	4.164	SPRING, LOW & REV CLU (AC-DELCO #8642227)	93	F (MD8)	1	8642227
695.	6-B5	4.166	PISTON, LOW & REV CLU (*KIT5) (AC-DELCO #8685549) .	93	F (MD8)	1	8685549
696.	6-B10	4.189	SEAL KIT, LOW & REV CLU (INCLS INR. OTR & INTER SEALS) (*KIT3. KIT4, KIT5) (4.166) (AC-DELCO #8648987) .	93	F (MD8)	1	8648987
697.		N.S.	DEFLECTOR, (PART OF 681) ...		.....		
698.	6-B13	4.224	ORIFICE, LUB FLUID (4.3MM DIA) (AC-DELCO #8663707) ...	93	F (MD8)	2	8663707

SERVICE KITS

1.	6-B5	4.166	SEAL KIT, 3-4 CLU PSTN (FOA) (INCL 622, 624, 629, 631, 636.) (AC-DELCO #8642919)	93	F (MD8)	1	8642919
2.	6-A12	4.005	RING KIT, RET (INCL 635, 638, 661, 671, 693.) (AC-DELCO #8642910)	93	F (MD8)	1	8642910
3.	6-A12	4.005	GASKET KIT, A/TRNS (W/SEALS) (INCL 608, 619, 622, 624, 629, 631, 636, 661, 696.) (W/O PLATES OR PISTONS) (AC-DELCO #24201804)	93	F (MD8)	1	24201804
4.		N.S.	TRANSMISSION KIT, AUTO (SERV OVERHAUL W/PLT, GSKT, SEAL) (USE 24201804 GASKET KIT T/W 24201806 (TRAN CODE 1FUM) OR 24201807 (TRAN CODE 1FYM) PLATE KIT T/W 24204495 PISTON KIT)		.. ..		

cardiagn.com

5.	6-A24	4.163	PLATE KIT, LOW & REV CLU (W/SUPT) (W/PSTN) (INCL 678, 679, 682, 693, 695, 696.) (STEEL PLATES) (AC-DELCO #8687996)	93	F (MD8)	1	8687996
6.	6-A24	4.163	PLATE KIT, 3-4 CLU (INCL 654.) (1.97MM THK) (AC-DELCO #8671900)	93	F (MD8)	1	8671900
7.	6-A24	4.163	PLATE KIT, FWD CLU (INCL 649) (INCLS INST SHEET & PLATES) (AC-DELCO #8647991)	93	F (MD8)	1	8647991
8.	6-A24	4.163	PLATE KIT, 3-4 CLU (USE ON TRAN W/JULIAN DATE OTHER THAN 005-230) (INCL 600, 625, 653-5) (W/APPLY & BKG PLTS) (AC-DELCO #8690923)	93	F (MD8)	1	8690923
9.	6-A24	4.163	PLATE KIT, CLU (INCL 612, 645, 649, 654, 682.) (HAS 2050 STAMPED ON PART) (AC-DELCO #24201807)	93	F (MD8)	1	24201807

RPO DEFINITIONS

LT1 - ENGINE-GAS, 8 CYL, 5.7L(5.7P),MFI,HO
L32 - ENGINE,3.4L,V6,(3.4S),SFI,OHV
MD8 - TRANSMISSION,AUTOMATIC 4-SPEED(THM700R4/4L60)

cardiagn.com

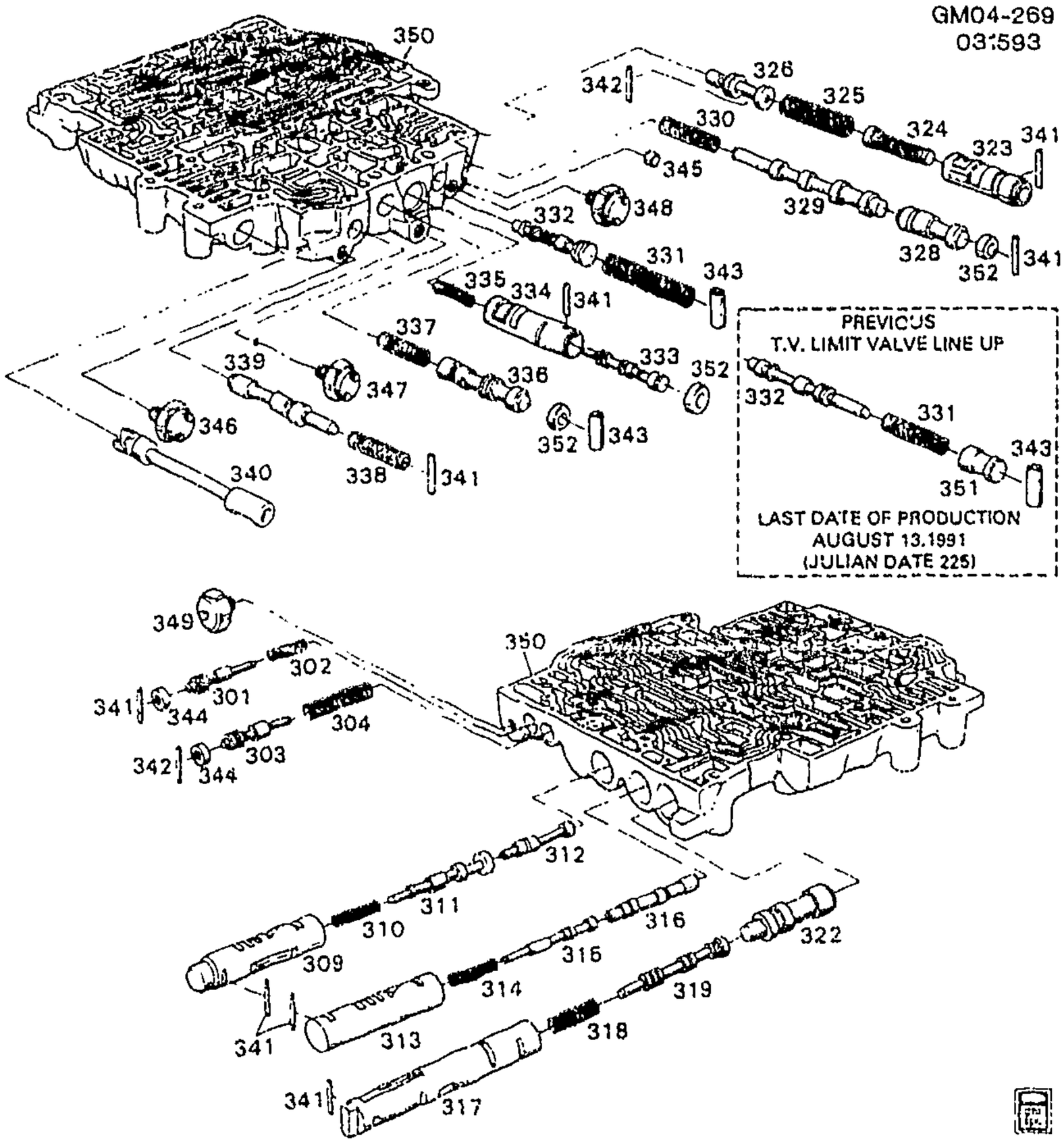

1993 F AUTOMATIC TRANSMISSION (MD8) PART 3 HM 4L60 CONTROL VALVE

301.	N.S.	VALVE, T .V. MOD DN SHFT (*KIT1)	
302.	N.S.	SPRING, T .V MOD DN SHFT VLV (*KIT1)	
303.	N.S.	VALVE, T .V. MOD UPSHIFT (*KIT1)	
304.	N.S.	SPRING, T .V. MOD UPSHIFT VLV (*KIT1)	
309.	N.S.	SLEEVE, 3-4 THROT VLV (*KIT1)	
310.	N.S.	SPRING, 3-4 THROT VLV (*KIT1)	
311.	N.S.	VALVE, 3-4 THROT (*KIT1)	
312.	N.S.	VALVE, 3-4 SHFT (*KIT1)	

cardiagn.com

313.		N.S.	SLEEVE, 2-3 THROT VLV (*KIT1)					
314.		N.S.	SPRING, 2-3 THROT VLV (*KIT1)					
315.		N.S.	VALVE, 2-3 THROT (*KIT1)					
316.		N.S.	VALVE, 2-3 SHFT (*KIT1)					
317.		N.S.	SLEEVE, 1-2 THROT VLV (*KIT1)					
318.		N.S.	SPRING, 1-2 THROT VLV (*KIT1)					
319.		N.S.	VALVE, 1-2 THROT (*KIT1)					
322.		N.S.	VALVE, 1-2 SHFT (*KIT1)					
323.		N.S.	SLEEVE, THROT VLV PLGR (*KIT1)					
324.		N.S.	PLUNGER, THROT VLV (*KIT1)					
325.		N.S.	SPRING, THROT VLV (*KIT1)					
326.		N.S.	VALVE, THROT (*KIT1)					
328.		N.S.	VALVE, 3-4 RLY (*KIT1)					
329.		N.S.	VALVE, 4-3 SEQUENCE (*KIT1)					
330.		N.S.	SPRING, 4-3 SEQUENCE VLV (*KIT1)					
331.		N.S.	SPRING, T.V. LIMIT VLV (*KIT1)					
332.		N.S.	VALVE, T.V. LIMIT (*KIT1)					
333.		N.S.	VALVE, 1 2 ACCUM (*KIT1)					
334.		N.S.	BUSHING, 1-2 ACCUM VLV (*KIT1)					
335.		N.S.	SPRING, 1-2 ACCUM VLV (*KIT1)					
336.		N.S.	VALVE, LINE BIAS (*KIT1)					
337.		N.S.	SPRING, LINE BIAS VLV (*KIT1)					
338.		N.S.	SPRING, 3-2 CONT VLV (*KIT1)					
339.		N.S.	VALVE, 3-2 CONT (*KIT1)					
340.	6-C6	4.279	VALVE, MAN (4.265) (AC-DELCO #8642336)	93	F (MD8)		1	8642336
341.	6-B25	4.265	PIN, TCC REG VLV BORE PLUG (25MM LG 2.7MM DIA) (COILED SPG) (AC-DELCO #8628400)	93	F (MD8)		11	8628400
342.	6-B25	4.265	PIN, T/V (20MM LG) (AC-DELCO #8654196)	93	F (MD8)		1	8654196
343.	6-B25	4.265	PIN, 3-2 C/VLV SPR (25MM LG 9MM DIA) (AC-DELCO #8631290)	93	F (MD8)		2	8631290
	6-B25	4.265	PIN, 3-2 C/VLV SPR (25MM LG 2.7MM DIA) (COILED SPG) (AC-DELCO #8628400)	93	F (MD8)		8	8628400
344.	6-C5	4.275	PLUG, SHFT T/V BORE (14.22MM DIA) (4.265) (AC-DELCO #8625546)	93	F (MD8)		2	8625546
345.	6-A17	4.105	PLUG, DIR FLUID GAL (.33 DIA) (AC-DELCO #8639141)	93	F (MD8)		1	8639141
346.	6-B25	4.265	SWITCH, 3RD CLU PRESS (1 PRONG) (22MM DIA) (AC-DELCO #8683502)	93	F (MD8)		1	8683502
347.	6-B25	4.265	SWITCH, 4-3 PULSE PRESS (AC-DELCO #8642473)	93	F (MD8)		1	8642473

cardiagn.com

348.	6-B25	4.265	SWITCH, 4TH CLU PRESS (1 PRONG, 22MM DIA) (AC-DELCO #8683502)	93	F (MD8)	1	8683502
	6-B25	4.265	SWITCH, 4TH CLU PRESS (1 PRONG, 28MM DIA) (AC-DELCO #8642473)	93	F (MD8)	1	8642473
349.	6-B25	4.265	SWITCH, 2ND CLU PRESS (1 PRONG) (22MM DIA) (AC-DELCO #8683502)	93	F (MD8)	1	8683502
350.		N.S.	BODY, C/VLV (*KIT1)		.....		
351.		N.S.	PLUG, T/V LIM VLV BORE (NOT REQD 1993)		.....		
352.	6-B25	4.265	PLUG, TCC REG VLV BORE (12.5MM DIA) (AC-DELCO #8634239)	93	F (MD8)	3	8634239

SERVICE KITS

1.	6-B25	4.265	VALVE, CONT (W/BODY & VLV) (REMAN) (AC-DELCO #24218084)	93	F (LT1, MD8, GU2) ...	1	24218084
	6-B25	4.265	VALVE, CONT (W/BODY & VLV) (REMAN) (COMPLETE ASM.) (AC-DELCO #24204898)	93	F (LT1, MD8, GU5)	1	24204898
	6-B25	4.265	VALVE KIT, CONT (W/BODY & VLV) (AC-DELCO #8683047) ...	93	F (L32 MD8) (EXC VP6)	1	8683047
	6-B25	4.265	VALVE KIT, CONT (W/BODY & VLV) (AC-DELCO #8684016) ...	93	F (L32, MD8, VP6) (EXPORT)	1	8684016

RPO DEFINITIONS
GU2 - AXLE,REAR,2.73 RATIO
GU5 - AXLE,REAR,3.23 RATIO
LT1 - ENGINE-GAS, 8 CYL, 5.7L(5.7P),MFI,HO
L32 - ENGINE,3.4L,V6,(3.4S),SFI,OHV
MD8 - TRANSMISSION,AUTOMATIC 4-SPEED(THM700R4/4L60)
VP6 - NOISE LEVEL CONTROL

cardiagn.com

GM04-397
051392

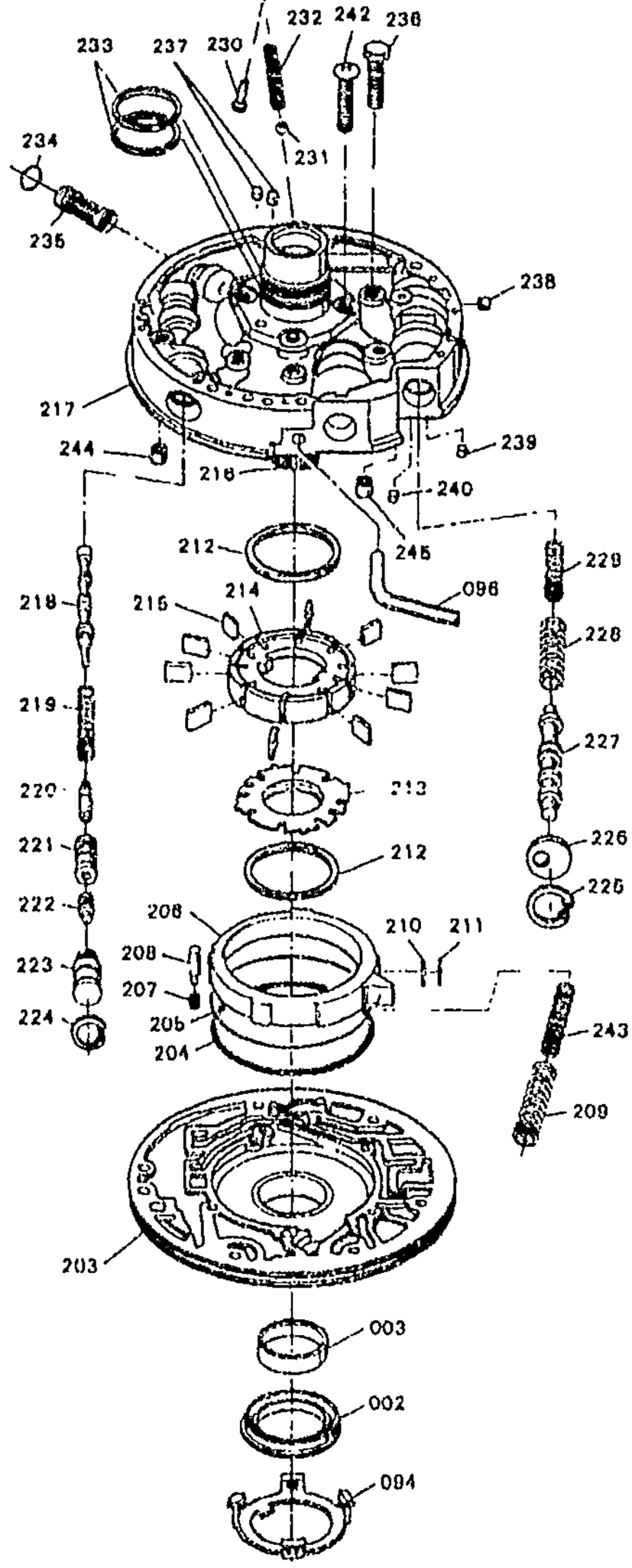

GM04-397F

1993 F AUTOMATIC TRANSMISSION (MD8) PART 4 HM 4L60 OIL PUMP

2.	6-B17	4.226	SEAL, T/CV FLUID (PART OF 203) (*KIT2, KIT3) (AC-DELCO #24202535)	93 F (MD8)	1	24202535
3.	6-A17	4.115	BUSHING, T/CV (PART OF 203) (AC-DELCO #24206030)	93 F (MD8)	1	24206030

cardiagn.com

94.	6–B17	4.226	**RETAINER**, T/CV FLUID SEAL (PART OF 203) (*KIT2, KIT3) (AC–DELCO #8654491)	93	F (MD8)	1	8654491
96.	6–B25	4.265	**PIPE**, AUX C/VLV BODY (AC–DELCO #8663615)	93	F (MD8)	1	8663615
203.	6–B13	4.224	**BODY**, A/TRNS FLUID PUMP (INCL 2, 3, 94, 204 THRU 215, 243) (10 VANE) (INCLS BODY, GUIDE, RING, RET, ROTOR, PIN, SEAL KIT, SLIDE, SPR&VANE) (AC–DELCO #8649964)	93	F (MD8)	1	8649964
204.		N.S.	**RING**, OIL SEAL SLIDE TO WEAR PLATE (PART OF 203, 214) (*KIT1)		.....		
205.		N.S.	**SEAL**, O RING SLIDE SEAL BACK–UP (PART OF 203, 214) (*KIT1)		.....		
206.	6–B13	4.224	**SLIDE**, A/TRNS FLUID PUMP (ALSO PART OF 203) (17.948MM) (AC–DELCO #24208304)	93	F (MD8)	1	24208304
	6–B13	4.224	**SLIDE**, A/TRNS FLUID PUMP (SEL) (ALSO PART OF 203) (17.987 MM) (AC–DELCO #8634084)	93	F (MD8)	1	8634084
	6–B13	4.224	**SLIDE**, A/TRNS FLUID PUMP (SEL) (ALSO PART OF 203) (18.007 MM) (AC–DELCO #8634085)	93	F (MD8)	1	8634085
	6–B13	4.224	**SLIDE**, A/TRNS FLUID PUMP (SEL) (ALSO PART OF 203) (17.961 MM) (AC–DELCO #24208305)	93	F (MD8)	1	24208305
	6–B13	4.224	**SLIDE**, A/TRNS FLUID PUMP (SEL) (ALSO PART OF 203) (AC–DELCO #24208306)	93	F (MD8)	1	24208306
207.	6–B17	4.226	**SPRING**, A/TRNS FLUID PUMP SLIDE PIV PIN (PART OF 203) (AC–DELCO #8634098)	93	F (MD8)	1	8634098
208.	6–B17	4.226	**PIN**, A/TRNS FLUID PUMP SLIDE PIV (PART OF 203) (AC–DELCO #8634097)	93	F (MD8)	1	8634097
209.	6–B17	4.226	**SPRING**, A/TRNS FLUID PUMP SLIDE OTR (PART OF 203) (AC–DELCO #8639563)	93	F (MD8)	1	8639563
210.		N.S.	**SUPPORT**, PUMP SLIDE SEAL (PART OF 203, 214) (*KIT1)		.....		
211.		N.S.	**SEAL**, PUMP SLIDE (PART OF 203, 214) (*KIT1)		.....		
212.	6–B17	4.226	**RING**, A/TRNS FLUID PUMP VANE (PART OF 203) (AC–DELCO #24201144)	93	F (MD8)	2	24201144
213.	6–B17	4.226	**GUIDE**, A/TRNS FLUID PUMP ROT (PART OF 203, 214) (10 VANE) (ALSO PART OF ROTOR KITS) (AC–DELCO #12337830) .	93	F (MD8)	1	12337830

cardiagn.com

214.	6–B12	4.210	ROTOR, A/TRNS FLUID PUMP (PART OF 203) (INCL 205) (17.955MM) (W/GDE, VANES & SEALS) (4.224) (AC–DELCO #8649951)	93	F (MD8)	1	8649951
	6–B12	4.210	ROTOR, A/TRNS FLUID PUMP (PART OF 203) (INCL 205) (17.968MM) (W/GDE, VANES & SEALS) (4.224) (AC–DELCO #8649952)	93	F (MD8)	1	8649952
	6–B12	4.210	ROTOR, A/TRNS FLUID PUMP (PART OF 203) (INCL 205) (17.981MM) (W/GDE, VANES & SEALS) (4.224) (AC–DELCO #8649953)	93	F (MD8)	1	8649953
	6–B12	4.210	ROTOR, A/TRNS FLUID PUMP (PART OF 203) (INCL 205) (17.994MM) (W/GDE, VANES & SEALS) (4.224) (AC–DELCO #8649954)	93	F (MD8)	1	8649954
	6–B12	4.210	ROTOR, A/TRNS FLUID PUMP (PART OF 203) (INCL 205) (18.007MM) (W/GDE, VANES & SEALS) (4.224) (AC–DELCO #8649955)	93	F (MD8)	1	8649955
215.	6–B17	4.226	VANE, A/TRNS FLUID PUMP (PART OF 203, 214) (AC–DELCO #8631280)	93	F (MD8)	AR	8631280
216.		N.S.	SHAFT & FLANGE ASM, STATOR (PART OF 217)				
217.	6–B13	4.224	COVER, A/TRNS FLUID PUMP (COMPL) (INCL 216, 244, 245) (AC–DELCO #24200310) (WHEN USED ON VEH FROM 1982–86, 8667093 MUST BE USED T/W 24200310)	93	F (LT1, MD8)	1	24200310
	6–B13	4.224	COVER, A/TRNS FLUID PUMP (INCL SHF & FLANGE ASM, VLV, SEAL, PLUG, SPRING) (INCL 216, 244, 245) (AC–DELCO #8667691)	93	F (L32, MD8)	1	8667691
218.	6–B25	4.262	VALVE, PRESS REG (OIL PUMP) (4.216) (AC–DELCO #8684048)	93	F (MD8)	1	8684048
219.	6–B25	4.262	SPRING, PRESS REG VLV (OIL PUMP) (PINK) (4.216) (AC–DELCO #8642751)	93	F (MD8)	1	8642751
220.	6–B25	4.265	VALVE, REV BOOST (W/SLEV & BUSH) (AC–DELCO #8648958)	93	F (LT1, MD8)	1	8648958
	6–B25	4.265	VALVE, REV BOOST (W/SLEV & BUSH)	93	F (L32, MD8)	1	8657925
221.		N.S.	BUSHING, REV BOOST VLV (PART OF 220)				
222.	6–C5	4.275	VALVE, T/V BOOS (W/BUSH) (PUMP CVR) (INCL 221, 223) (4.216) (AC–DELCO #8634941)	93	F (LT1, MD8)	1	8634941
	6–C5	4.275	VALVE, T/V BOOS (W/BUSH) (PUMP CVR) (INCL 221, 223) (4.216) (AC–DELCO #8634955)	93	F (L32, MD8)	1	8634955

cardiagn.com

223.		N.S.	**BUSHING**, T .V. BOOST (PART OF 222)				
224.	6–B25	4.265	**RING**, T/V BOOST VLV BUSH RET (*KIT4) (4.216) (AC–DELCO #11503348)	93	F (MD8)	1	11503348
225.	6–B25	4.262	**RING**, TCC VLV STOP RET (TO PUMP) (*KIT4) (8.934) (AC–DELCO #274267)	93	F (MD8)	1	274267
226.	6–B25	4.262	**STOP**, TCC VLV (4.216) (AC–DELCO #8634705)	93	F (MD8)	1	8634705
227.	6–B25	4.265	**VALVE**, TCC (O/PMP) (AC–DELCO #8634031)	93	F (MD8)	1	8634031
228.	6–B25	4.265	**SPRING**, TCC VLV OTR (OIL PUMP) (4.216) (AC–DELCO #8634399)	93	F (MD8)	1	8634399
229.	6–B25	4.265	**SPRING**, TCC VLV INR (OIL PUMP) (4.216) (AC–DELCO #8634378)	93	F (MD8)	1	8634378
230.	6–B25	4.262	**RIVET**, PRESS RLF BALL VLV SPR (OIL PUMP) (4.216) (AC–DELCO #8642619)	93	F (MD8)	1	8642619
231.		8.899	**BALL**, 3/8 STEEL (AC–DELCO #7826284)	93		AR	7826284
232.	6–B25	4.265	**SPRING**, PRESS RLF BALL VLV (OIL PUMP) (AC–DELCO #8634106)	93	F (MD8)	1	8634106
233.	6–B17	4.226	**RING**, REV INPUT CLU HSG FLUID SEAL (*KIT2, KIT3) (AC–DELCO #8681292)	93	F (MD8)	2	8681292
234.	6–B13	4.224	**SEAL**, A/TRNS FLUID PUMP CVR SCRN (PART OF 235) (AC–DELCO #8642581)	93	F (MD8)	1	8642581
235.	6–B13	4.224	**SCREEN**, A/TRNS FLUID PUMP CVR (W/SEAL) (INCL 234) (AC–DELCO #8642912)	93	F (MD8)	1	8642912
236.		8.900	**BOLT**, HEX, 8X1.25X40, 33.2 THD, GM 500M, 10.9, PC, MACH (AC–DELCO #11500921)	93		AR	11500921
237.	6–B13	4.224	**ORIFICE**, A/TRNS FLUID PUMP AIR BL (AC–DELCO #24203787)	93	F (MD8)	1	24203787
238.	6–B13	4.224	**PLUG**, A/TRNS FLUID PUMP CVR (6.80MM DIA) (AC–DELCO #8623886)	93	F (MD8)	8	8623886
239.	6–A21	4.128	**PLUG**, A/TRNS O/PMP FLUID CLR HOLE (6.84MM DIA) (AC–DELCO #8634285)	93	F (MD8)	1	8634285
240.	6–B13	4.224	**ORIFICE**, TCC SIG (4.85MM DIA) (AC–DELCO #8634284)	93	F (MD8)	1	8634284
242.	6–B17	4.226	**BOLT**, A/TRNS FLUID PUMP (M6X1X19.0) (11.561) (AC–DELCO #20616587)	93	F (MD8)	3	20616587
243.	6–B17	4.226	**SPRING**, A/TRNS FLUID PUMP SLIDE INR (PART OF 203) (AC–DELCO #8639562)	93	F (MD8)	1	8639562

cardiagn.com

244.	6–B9	4.180	**VALVE**, A/TRNS FLUID/PUMP CVR BALL CHK (PART OF 217) (SINGLE ORIFICE) (TALL & NARROW) (4.226) (AC–DELCO #8628732)	93	F (MD8)	2	8628732
	6–B9	4.180	**VALVE**, A/TRNS FLUID/PUMP CVR BALL CHK (PART OF 217) (DOUBLE ORIFICE) (W/BALL) (AC–DELCO #8663890)	93	F (MD8)	3	8663890
245.	6–B9	4.180	**VALVE**, A/TRNS FLUID/PUMP CVR BALL CHK (PART OF 217) (SINGLE ORIFICE) (TALL & NARROW) (4.226) (AC–DELCO #8628732)	93	F (MD8)	2	8628732
	6–B9	4.180	**VALVE**, A/TRNS FLUID/PUMP CVR BALL CHK (PART OF 217) (DOUBLE ORIFICE) (W/BALL) (AC–DELCO #8663890)	93	F (MD8)	3	8663890

SERVICE KITS

1.	6–B17	4.226	**SEAL KIT**, A/TRNS FLUID PUMP SLIDE (INCL 204–5, 210–1.) (INCLS RING, SEALS&SUPT) (AC–DELCO #8634906)	93	F (MD8)	1	8634906
2.	6–A12	4.005	**GASKET KIT**, A/TRNS (W/SEALS) (INCL 2, 94, 233.) (W/O PLATES OR PISTONS) (AC–DELCO #24201804)	93	F (MD8)	1	24201804
3.		N.S.	**TRANSMISSION KIT**, AUTO (SERV OVERHAUL W/PLT, GSKT, SEAL) (USE 24201804 GASKET KIT T/W 24201806 (TRAN CODE 1FUM) OR 24201807 (TRAN CODE 1FYM) PLATE KIT T/W 24204495 PISTON KIT.)		.....		
4.	6–A12	4.005	**RING KIT**, RET (INCL 224–5.) (AC–DELCO #8642910)	93	F (MD8)	1	8642910

RPO DEFINITIONS
LT1 – ENGINE–GAS, 8 CYL, 5.7L(5.7P),MFI,HO
L32 – ENGINE,3.4L,V6,(3.4S),SFI,OHV
MD8 – TRANSMISSION,AUTOMATIC 4–SPEED(THM700R4/4L60)

cardiagn.com

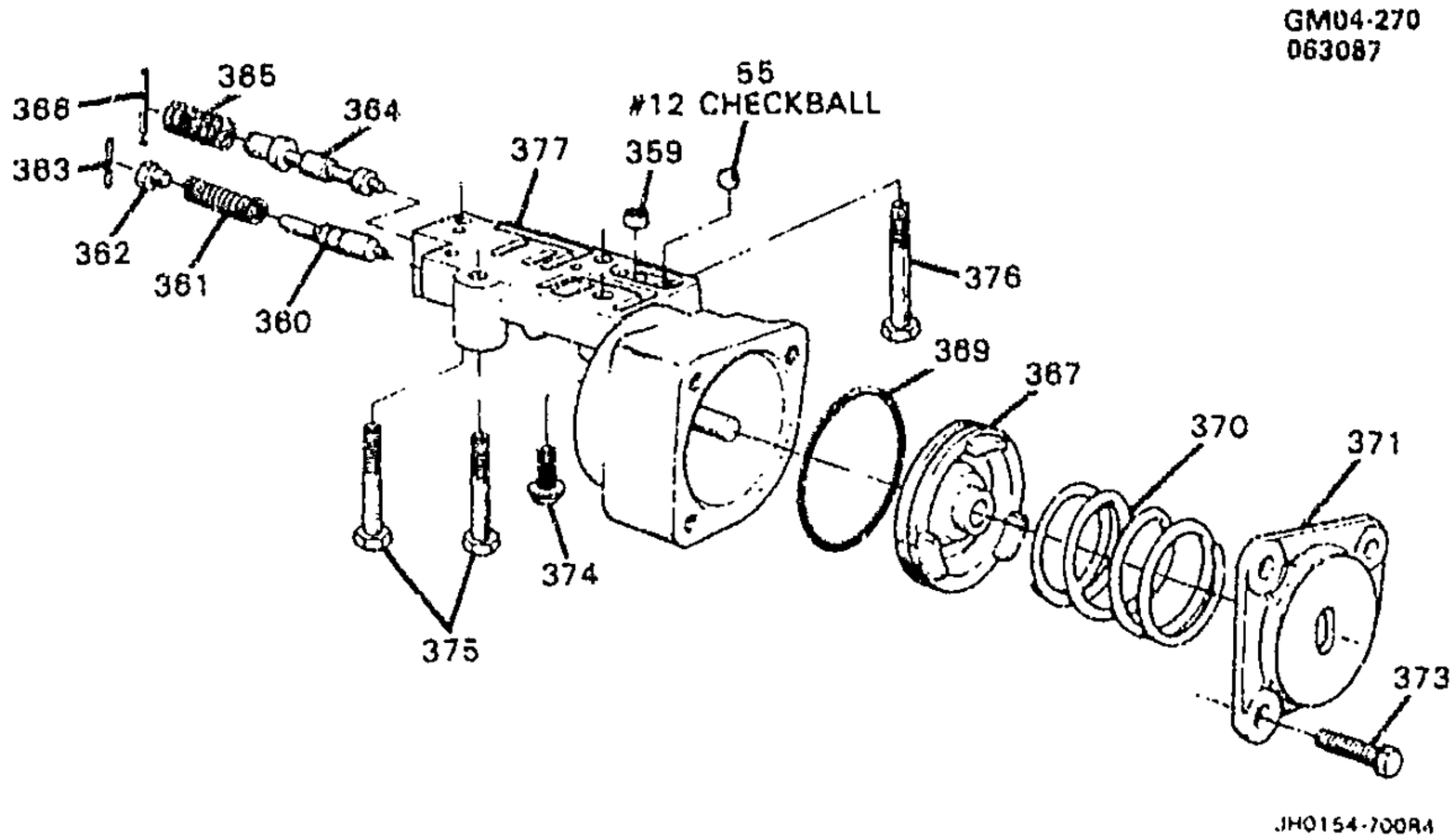

1993 F AUTOMATIC TRANSMISSION (MD8) PART 5 HM 4L60 AUXILIARY ACCUMULATOR VALVE

55.		8.899	BALL, GRADE 2, STD DIA 1/4 (2), CHROME STL (AC-DELCO #104918)	93		AR	104918
359.	6-A17	4.105	ORIFICE, FWD CLU FEED (9.12 MM DIA) (1 DIMPLE) (4.265) (AC-DELCO #8667040)	93	F (MD8)	1	8667040
	6-A17	4.105	ORIFICE, FWD CLU FEED (2 DIMPLES) (4.265) (AC-DELCO #8663601)	93	F (MD8)	1	8663601
360.		N.S.	VALVE, ABUSE (PART OF 377)				
361.		N.S.	SPRING, ABUSE VLV (PART OF 377)				
362.		N.S.	STOP, ABUSE VLV (PART OF 377)				
363.	6-B25	4.265	PIN, FWD CLU ABUSE VLV STOP (AC-DELCO #8663605)	93	F (MD8)	1	8663605
364.		N.S.	VALVE, LO OVERRUN CLU (PART OF 377)				
365.		N.S.	SPRING, LO OVERRUN CLU VLV (PART OF 377)				
366.	6-B25	4.265	PIN, TCC REG VLV BORE PLUG (25MM LG 2.7MM DIA) (COILED SPG) (AC-DELCO #8628400)	93	F (MD8)	11	8628400
367.	6-B18	4.228	PISTON KIT, 1-2 & 3-4 ACCUM (INCL 369) (W/SEALS) (*KIT1, KIT2) (AC-DELCO #24204495)	93	F (MD8)	1	24204495
369.	6-B21	4.229	RING, 3-4 ACCUM PSTN FLUID SEAL (PART OF 367) (*KIT1, KIT2) (AC-DELCO #24206509)	93	F (MD8)	AR	24206509

cardiagn.com

370.	6-B22	4.233	**SPRING**, FWD CLU ACCUM PSTN (PINK) (4.265) (AC-DELCO #8667046)	93	F (MD8)	1	8667046
371.	6-B25	4.265	**COVER**, AUX C/VLV BODY (4.215) (AC-DELCO #8673043) .	93	F (MD8)	1	8673043
373.		8.900	**BOLT-HEX**, M6X1X25, 22.5 THD, GM500 (10.9) PC (AC-DELCO #11509417)	93	....	AR	11509417
374.	6-B25	4.265	**BOLT**, AUX C/VLV BODY (M6X1X24) (4.228) (AC-DELCO #8667821)	93	F (MD8)	2	8667821
375.		8.900	**BOLT**, HEX M6X1X35 10.9 PC (AC-DELCO #11503870)	93	.....	AR	11503870
376.		8.900	**BOLT**, HEX WA HD, M6X1X7.4 (AC-DELCO #8667680)	93	....	AR	8667680
377.	6-B25	4.265	**BODY**, AUX C/VLV (INCL 360, 362, 364-5) (WHITE) (AC-DELCO #8667822) (USE ON 3FAM & 3FDM TRANS CODE, FOR 2ND DES SEE 08686002.) ..	93	F (L32, MD8) (1ST DES)	1	8667822
	6-B25	4.265	**BODY**, AUX C/VLV (INCL 360, 362, 364-5) (AC-DELCO #8686002) (USE ON 3FXM & 3FRM TRANS CODE, FOR 1ST DES SEE 08667822.)	93	F (L32, MD8) (2ND DES)	1	8686002
	6-B25	4.265	**BODY**, AUX C/VLV (REMAN) (INCL 360, 362, 364-5) (AC-DELCO #24205606)	93	F (LT1, MD8)	1	24205606

SERVICE KITS

1.	6-A12	4.005	**GASKET KIT**, A/TRNS (W/SEALS) (INCL 367, 369.) (W/O PLATES OR PISTONS) (AC-DELCO #24201804)	93	F (MD8)	1	24201804
2.		N.S.	**TRANSMISSION KIT**, AUTO (SERV OVERHAUL W/PLT, GSKT, SEAL) (USE 24201804 GASKET KIT T/W 24201806 (TRAN CODE 1FUM) OR 24201807 (TRAN CODE 1FYM) PLATE KIT T/W 24204495 PISTON KIT.)		.. ..		

RPO DEFINITIONS

LT1 -- ENGINE-GAS, 8 CYL, 5 7L(5.7P),MFI,HO
L32 -- ENGINE,3.4L,V6,(3.4S),SFI,OHV
MD8 -- TRANSMISSION,AUTOMATIC 4--SPEED(THM700R4/4L60)

cardiagn.com

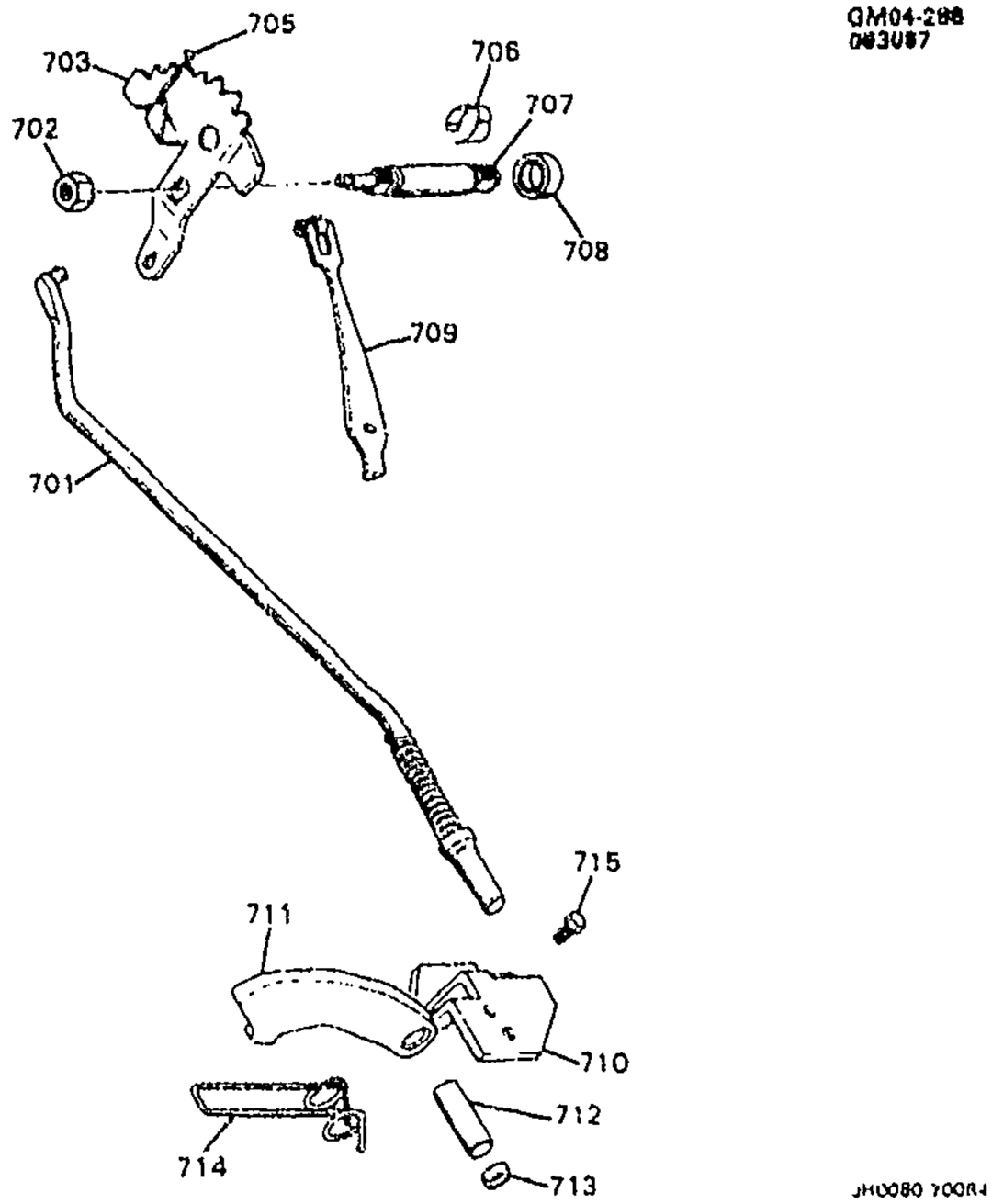

GM04–288F

1993 F AUTOMATIC TRANSMISSION (MD8) PART 6 HM 4L60 PARK LOCK

701.	6–C6	4.290	**ACTUATOR**, PARK PAWL (INCLS ACTUATOR, ROD & SPRINGS) (AC–DELCO #8667517)	93 F (MD8)	1	8667517
702.	6–C5	4.275	**NUT**, MAN SHFT DTNT LVR (M10X15.6H THD) (AC–DELCO #8648178)	93 F (MD8)	1	8648178
703.	6–C6	4.279	**LEVER**, MAN SHFT DTNT (GOLD) (SQUARE HOLE) (AC–DELCO #8654106)	93 F (MD8)	1	8654106
705.	6–C5	4.275	**LINK**, MAN VLV (*KIT1, KIT2) (AC–DELCO #8654113)	93 F (MD8)	1	8654113
706.	6–C5	4.275	**RETAINER**, MAN SHFT SHF (AC–DELCO #8642246)	93 F (MD8)	1	8642246
707.	6–C6	4.294	**SHAFT KIT**, MAN SHFT (INCL 708) (SHORT) (INCLS SEAL, INDIVIDUAL COMPONENT NOT SOLD SEPARATELY) (AC–DELCO #24210712)	93 F (MD8)	1	24210712
708.	6–C6	4.282	**SEAL**, MAN SHFT SHF (PART OF 707) (*KIT1, KIT2) (AC–DELCO #8657163)	93 F (MD8)	1	8657163

cardiagn.com

709.	6-C5	4.275	**DETENT**, MAN SHFT (AC-DELCO #8642247)	93	F (MD8)	1	8642247
710.	6-C6	4.290	**BRACKET**, PARK PAWL ACTR (AC-DELCO #8667574)	93	F (MD8)	1	8667574
711.		N.S.	**PAWL**, PARK (PART OF 712)		.....		
712.	6-C6	4.294	**PAWL KIT**, PARK (INCL 711, 713) (INST SHT, PAWL, PLUG & SHF) (AC-DELCO #8669911)	93	F (MD8)	1	8669911
713.	6-C6	4.294	**PLUG**, PARK PAWL SHF HOLE (9.65MM DIA STEEL) (PART OF 712) (.38 DIA) (*KIT1, KIT2) (AC-DELCO #8620318)	93	F (MD8)	1	8620318
714.	6-C7	4.295	**SPRING**, PARK PAWL (AC-DELCO #8642193)	93	F (MD8)	1	8642193
715.		8.900	**BOLT-HEX**, M8X1.25X20, 16.88 THD, GM500 (10.9), PZOR, MACH (AC-DELCO #11508687)	93	.....	AR	11508687

SERVICE KITS

1.	6-A12	4.005	**GASKET KIT**, A/TRNS (W/SEALS) (INCL 705, 708, 713.) (W/O PLATES OR PISTONS) (AC-DELCO #24201804)	93	F (MD8)	1	24201804
2.		N.S.	**TRANSMISSION KIT**, AUTO (SERV OVERHAUL W/PLT, GSKT, SEAL) (USE 24201804 GASKET KIT T/W 24201806 (TRAN CODE 1FUM) OR 24201807 (TRAN CODE 1FYM) T/W 24204495 PISTON KIT.)		....		

RPO DEFINITIONS
MD8 - TRANSMISSION,AUTOMATIC 4-SPEED(THM700R4/4L60)

cardiagn.com

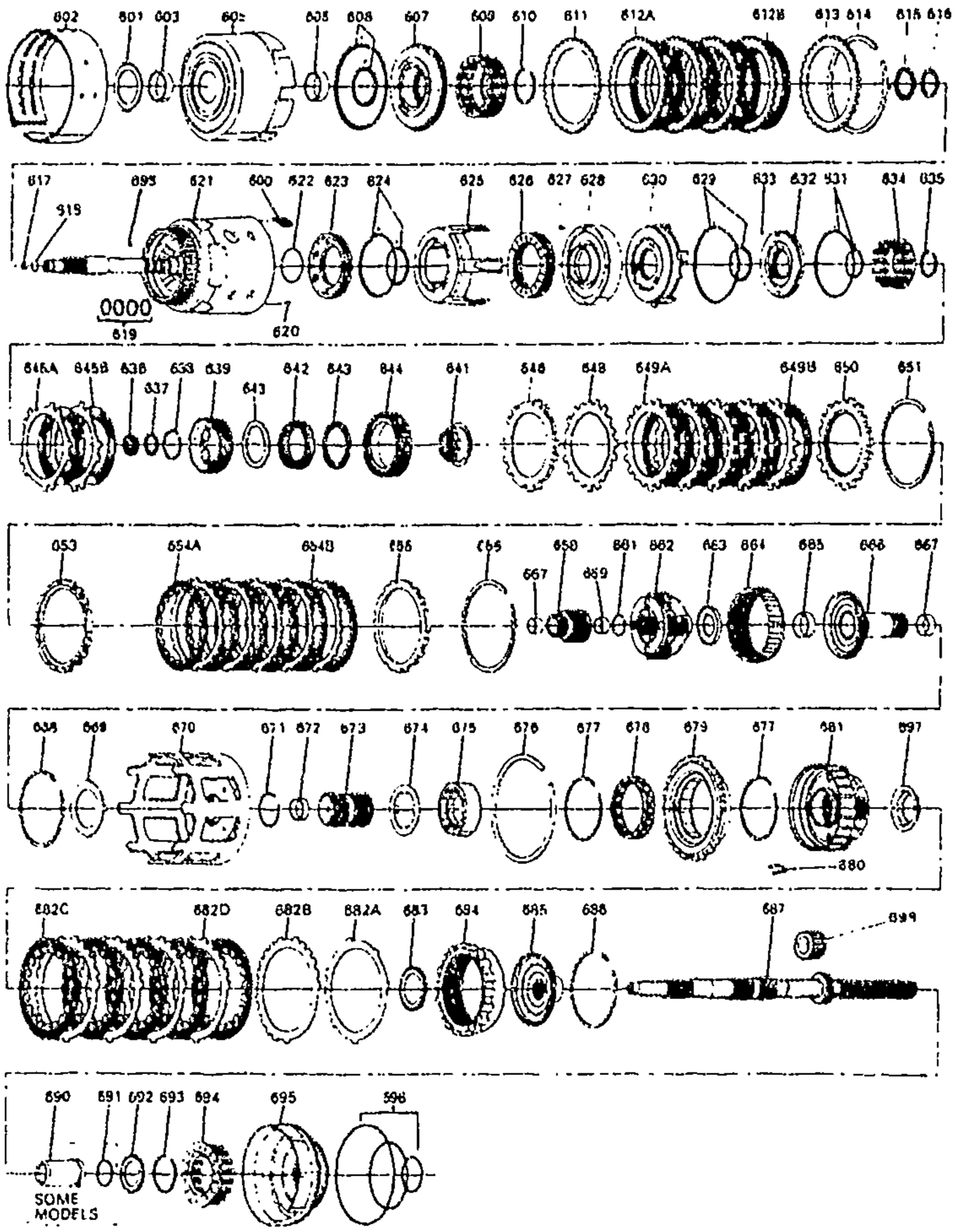

GM04-417F

1994 F AUTOMATIC TRANSMISSION (M30) PART 2 (4L60E) CLUTCH GEARS

600.	6-A24	4.163	SPRING, 3RD & 4TH CLU BOOST (INCLS RET & (2) SPRNGS) (AC-DELCO #8667424)	94 F (M30)	5	8667424
601.	6-B10	4.189	WASHER, REV INPUT CLU HSG THR (4.226) (AC-DELCO #08642041)	94 F (M30)	1	8642041
	6-B10	4.189	WASHER, REV INPUT CLU HSG THR (1.87-1.97MM) (4.158) (AC-DELCO #8642067)	94 F (M30)	1	8642067

cardiagn.com

	6-B10	4.189	**WASHER**, REV INPUT CLU HSG THR (2.04-2.14MM) (4.158) (AC-DELCO #8642068)	94	F (M30)	1	8642068
	6-B10	4.189	**WASHER**, REV INPUT CLU HSG THR (2.21-2.31MM) (4.158) (AC-DELCO #8642069)	94	F (M30)	1	8642069
	6-B10	4.189	**WASHER**, REV INPUT CLU HSG THR (2.38-2.48MM) (4.158) (AC-DELCO #8642070)	94	F (M30)	1	8642070
	6-B10	4.189	**WASHER**, REV INPUT CLU HSG THR (2.55-2.65MM) (4.158) (AC-DELCO #8642071)	94	F (M30)	1	8642071
	6-B10	4.189	**WASHER**, REV INPUT CLU HSG THR (2.72-2.82MM) (4.158) (AC-DELCO #8642072)	94	F (M30)	1	8642072
	6-B10	4.189	**WASHER**, REV INPUT CLU HSG THR (2.89-2.99MM) (4.158) (AC-DELCO #8642073)	94	F (M30)	1	8642073
	6-B10	4.189	**WASHER**, REV INPUT CLU HSG THR (3.06-3.16MM) (4.158) (AC-DELCO #8642074)	94	F (M30)	1	8642074
602.	6-B24	4.251	**BAND**, 2-4 (4.163) (AC-DELCO #8673175)	94	F (M30)	1	8673175
603.	6-B9	4.180	**BUSHING**, REV INPUT CLU HSG FRT (ALSO PART OF 605) (AC-DELCO #8642905)	94	F (M30)	1	8642905
605.	6-B7	4.169	**HOUSING**, REV INPUT CLU (INCL 603, 606) (AC-DELCO #8681295)	94	F (M30)	1	8681295
606.	6-B7	4.169	**BUSHING**, DIR CLU HSG RH (ALSO PART OF 605) (AC -DELCO #8628917)	94	F (M30)	1	8628917
607.	6-B5	4.166	**PISTON**, REV INPUT CLU (.095 HOLE) (*KIT9) (AC-DELCO #8667841)	94	F (M30)	1	8667841
608.	6-B5	4.166	**SEAL KIT**, REV INPUT CLU (INCLS SEALS) (*KIT2, KIT3) (AC-DELCO #8657922)	94	F (M30)	1	8657922
609.	6-B5	4.164	**SPRING**, REV INPUT CLU (AC-DELCO #8647284)	94	F (M30)	1	8647284
610.	6-B5	4.164	**RING**, REV INPUT CLU SPR RET (*KIT4) (AC-DELCO #8628059) .	94	F (M30)	1	8628059
611.	6-A24	4.163	**PLATE**, REV INPUT CLU (WAVED) (AC-DELCO #8663074)	94	F (LT1, M30)	1	8663074
	6-A24	4.163	**PLATE**, REV INPUT CLU (WAVED) (AC-DELCO #8685893)	94	F (L32, M30)	1	8685893
612.	6-A24	4.163	**PLATE**, REV INPUT CLU (ILLUSTRATED AS 612A) (153MM DIA) (*KIT8) (AC-DELCO #8673605)	94	F (M30)	4	8673605
	6-A24	4.163	**PLATE**, REV INPUT CLU (ILLUSTRATED AS 612B) (W/ HOLES IN TURB PLATES) (AC-DELCO #24205267)	94	F (M30)	4	24205267

cardiagn.com

613.	6-A24	4.163	**PLATE**, REV INPUT CLU BKG (7.25-7.41MM) (AC-DELCO #8682863)	94	F (LT1, M30)	1	8682863
	6-A24	4.163	**PLATE**, REV INPUT CLU BKG (6.52-6.68MM) (AC-DELCO #8682864)	94	F (LT1, M30)	1	8682864
	6-A24	4.163	**PLATE**, REV INPUT CLU BKG (5.79-5.95MM) (AC-DELCO #8682865)	94	F (LT1, M30)	1	8682865
	6-A24	4.163	**PLATE**, REV INPUT CLU BKG (7.045-7.211MM) (AC-DELCO #24213046)	94	F (L32, M30, GU5)	1	24213046
	6-A24	4.163	**PLATE**, REV INPUT CLU BKG (6.270-6.436MM) (AC-DELCO #24213047)	94	F (L32, M30, GU5)	1	24213047
	6-A24	4.163	**PLATE**, REV INPUT CLU BKG (AC-DELCO #24213048)	94	F (L32, M30, GU5)	1	24213048
614.	6-B5	4.164	**RING**, REV INPUT CLU BKG PLT RET (YELLOW) (AC-DELCO #8667022)	94	F (M30)	1	8667022
615.	6-A24	4.162	**BEARING**, REV INPUT CLU HSG THR (STATOR SHF) (TO SEL WA) (AC-DELCO #8642066)	94	F (M30)	1	8642066
616.	6-B10	4.189	**WASHER**, REV INPUT CLU HSG THR (4.226) (AC-DELCO #08642041)	94	F (M30)	1	8642041
	6-B10	4.189	**WASHER**, REV INPUT CLU HSG THR (1.87-1.97MM) (4.158) (AC-DELCO #8642067)	94	F (M30)	1	8642067
	6-B10	4.189	**WASHER**, REV INPUT CLU HSG THR (2.04-2.14MM) (4.158) (AC-DELCO #8642068)	94	F (M30)	1	8642068
	6-B10	4.189	**WASHER**, REV INPUT CLU HSG THR (2.21-2.31MM) (4.158) (AC-DELCO #8642069)	94	F (M30)	1	8642069
	6-B10	4.189	**WASHER**, REV INPUT CLU HSG THR (2.38-2.48MM) (4.158) (AC-DELCO #8642070)	94	F (M30)	1	8642070
	6-B10	4.189	**WASHER**, REV INPUT CLU HSG THR (2.55-2.65MM) (4.158) (AC-DELCO #8642071)	94	F (M30)	1	8642071
	6-B10	4.189	**WASHER**, REV INPUT CLU HSG THR (2.72-2.82MM) (4.158) (AC-DELCO #8642072)	94	F (M30)	1	8642072
	6-B10	4.189	**WASHER**, REV INPUT CLU HSG THR (2.89-2.99MM) (4.158) (AC-DELCO #8642073)	94	F (M30)	1	8642073
	6-B10	4.189	**WASHER**, REV INPUT CLU HSG THR (3.06-3.16MM) (4.158) (AC-DELCO #8642074)	94	F (M30)	1	8642074
617.	6-A20	4.123	**VALVE**, TURB SHF BALL CHK (PART OF 621) (YELLOW) (RET) (AC-DELCO #8639284)	94	F (LT1, M30)	1	8639284
	6-A20	4.123	**VALVE**, TURB SHF BALL CHK (RET) (PART OF 621) (YELLOW) (AC-DELCO #8647037)	94	F (L32, M30)	1	8647037

cardiagn.com

618.	6-A20	4.123	**SEAL**, TURB SHF (O RING) (*KIT2, KIT3) (AC-DELCO #8630049)	94	F (LT1, M30)	1	8630049
	6-A20	4.123	**SEAL**, TURB SHF (O RING) (TO SEL WA) (*KIT2, KIT3) (AC-DELCO #8662686)	94	F (L32, M30)	1	8662686
619.	6-A20	4.123	**RING**, INPUT SHF FLUID SEAL (TEFLON) (TEFLON) (*KIT2, KIT3) (AC-DELCO #8667035)	94	F (M30)	4	8667035
620.	6-A20	4.123	**VALVE**, 3--4 CLU HSG BALL CHK (ALSO PART OF 621) (AC-DELCO #24208262)	94	F (M30)	1	24208262
621.	6-A23	4.158	**HOUSING**, 3-4 CLU (W/INPUT SHF) (INCL 617, 620) (AC-DELCO #8667659)	94	F (LT1, M30)	1	8667659
	6-A23	4.158	**HOUSING**, 3-4 CLU (W/INPUT SHF) (INCL 617, 620) (AC-DELCO #8667661)	94	F (L32, M30)	1	8667661
622.		N.S.	**SEAL**, O--RING INPUT TO FWD HSG (*KIT1, KIT2, KIT3)				
623.	6-B5	4.166	**PISTON**, 3-4 CLU (AC-DELCO #24200290)	94	F (M30)	1	24200290
624.	6-B5	4.166	**SEAL**, 3-4 CLU PSTN INR (*KIT1, KIT2, KIT3) (AC-DELCO #8682137)	94	F (M30)	1	8682137
		N.S.	**SEAL**, 3RD & 4TH CLU PSTN OTR (*KIT1, KIT2, KIT3)				
625.	6-B7	4.167	**RING**, 3--4 CLU APPL (1 BAR) (AC-DELCO #8685043)	94	F (M30)	1	8685043
626.	6-B7	4.167	**SPRING**, 3-4 CLU (105.12MM O.D.) (AC-DELCO #8685244)	94	F (M30)	1	8685244
627.	6-A20	4.123	**VALVE**, FWD CLU HSG BALL CHK (ALSO PART OF 628) (SINGLE ORIFICE) (TALL & NARROW) (4.226) (AC-DELCO #8628732)	94	F (LT1 M30)	1	8628732
	6-A20	4.123	**VALVE**, FWD CLU HSG BALL CHK (ALSO PART OF 628) (RET) (4.169) (AC-DELCO #8654438)	94	F (L32, M30)	1	8654438
628.	6-B7	4.169	**HOUSING**, FWD CLU (INCL 627) (*KIT9) (AC-DELCO #8654326)	94	F (L32, M30)	1	8654326
	6-B7	4.169	**HOUSING**, FWD CLU (INCL 627) (INCLS HOUSINGS & VALVE) (*KIT9) (AC-DELCO #24205298)	94	F (LT1, M30)	1	24205298
629.	6-B5	4.166	**SEAL**, FWD CLU PSTN OTR (*KIT1, KIT2, KIT3) (AC-DELCO #8686146)	94	F (M30)	1	8686146
		N.S.	**SEAL**, FWD CLU INR (*KIT1, KIT2, KIT3)				
630.	6-B5	4.166	**PISTON**, FWD CLU (AC-DELCO #8683513)	94	F (M30)	1	8683513
631.		N.S.	**SEAL**, OVERRUN CLU INR & OTR (*KIT1, KIT2, KIT3)				
632.	6-B5	4.166	**PISTON**, OVERRUN CLU (INCL 633) (ALUMINUM TYPE W/REMOVABLE SEAL) (AC-DELCO #8642148)	94	F (M30)	1	8642148

cardiagn.com

633.		8.899	BALL, SPECIAL, 3/16 STEEL (ALSO PART OF 632) (AC-DELCO #7002117)	94		AR	7002117
634.	6-A24	4.163	SPRING, OVERRUN CLU (AC-DELCO #8677876)	94	F (M30)	1	8677876
635.		8.934	RING, EXT SNAP FITS M38 DIA SHT .PL (*KIT4)	94		AR	11500692
636.	6-B8	4.176	SEAL, OUTPUT SHF (*KIT1, KIT2, KIT3) (AC-DELCO #8677268)	94	F (M30)	1	8677268
637.	6-A23	4.159	BEARING, INPUT SUN GR THR (AC-DELCO #8642162)	94	F (M30)	1	8642162
638.	6-B9	4.180	RING, OVERRUN CLU HUB RET (SNAP) (ALSO PART OF 642) (*KIT4) (AC-DELCO #8647083)	94	F (M30)	1	8647083
639.		N.S.	HUB, OVERRUN CLU (PART OF 642)				
641.		N.S.	RETAINER, FWD CLU SPRAG INR (PART OF 642)				
642.	6-B5	4.164	CLUTCH, FWD RLR (INCL 638-9, 641, 643-4) (HIGH SPD, INCLS INPUT SUN GEAR) (AC-DELCO #24210960)	94	F (M30)	1	24210960
643.		N.S.	RETAINER, (PART OF 642)				
644.		N.S.	RACE, FWD CLU SPRAG OTR (PART OF 642)				
645.	6-A24	4.163	PLATE, OVERRUN CLU (ILLUSTRATED AS 645A) (1.93-2.13 THK) (GROOVED) (*KIT8) (AC-DELCO #8673253)	94	F (M30)	2	8673253
	6-A24	4.163	PLATE, OVERRUN CLU (ILLUSTRATED AS 645B) (2.34MM THK) (FLAT STEEL) (AC-DELCO #8642154)	94	F (M30)	2	8642154
646.	6-A24	4.163	PLATE, FWD CLU APPLY (AC-DELCO #8682866)	94	F (LT1, M30)	1	8682866
	6-A24	4.163	PLATE, FWD CLU APPLY (AC-DELCO #8685049)	94	F (L32, M30)	1	8685049
648.	6-A24	4.163	PLATE, FWD CLU (WAVED) (AC-DELCO #8647058)	94	F (LT1, M30)	1	8647058
	6-A24	4.163	PLATE, FWD CLU (WAVED) (AC-DELCO #8686010)	94	F (L32, M30)	1	8686010
649.	6-A24	4.163	PLATE, FWD CLU (ILLUSTRATED AS 649A) (FIBER) (*KIT3, KIT5, KIT8) (AC-DELCO #8673254)	94	F (M30)	5	8673254
	6-A24	4.163	PLATE, FWD CLU (ILLUSTRATED AS 649B) (STEEL) (*KIT3, KIT5, KIT8) (AC-DELCO #8654325)	94	F (M30)	5	8654325
650.	6-A24	4.163	PLATE, FWD CLU BKG (6.92-7.07MM) (ID A) (AC-DELCO #8682867)	94	F (M30)	1	8682867
	6-A24	4.163	PLATE, FWD CLU BKG (8.73-9.03MM) (ID B) (AC-DELCO #8682868)	94	F (M30)	1	8682868
	6-A24	4.163	PLATE, FWD CLU BKG (4.56-4.71MM) (ID E) (AC-DELCO #8682871)	94	F (M30)	1	8682871

cardiagn.com

	6-A24	4.163	PLATE, FWD CLU BKG (7.55MM-7.85MM) (AC-DELCO #24212467)	94	F (M30)	1	24212467
	6-A24	4.163	PLATE, FWD CLU BKG (8.14MM-8.44MM) (AC-DELCO #24212468)	94	F (M30)	1	24212468
651.	6-A24	4.163	RING, FWD CLU BKG PLT RET (AC-DELCO #8642170)	94	F (M30)	1	8642170
653.	6-A24	4.163	PLATE, 3-4 CLU APPLY (AC-DELCO #8685044)	94	F (M30)	1	8685044
654.	6-A24	4.163	PLATE, 3-4 CLU (ILLUSTRATED AS 654A) (HAS 2050 STAMPED ON PART) (*KIT3, KIT7, KIT8) (AC-DELCO #8679390)	94	F (M30)	6	8679390
	6-A24	4.163	PLATE, 3-4 CLU (ILLUSTRATED AS 654B) (2.71MM (STEEL) (5 LG SPACES EQUAL SPACED BETWEEN CLSTR OF SMALL TEETH) (*KIT3, KIT7) (AC-DELCO #8685045)	94	F (M30)	5	8685045
655.	6-A24	4.163	PLATE, 3-4 CLU BKG (ID BY 3 DIMPLES) (AC-DELCO #8685046)	94	F (M30)	1	8685046
	6-A24	4.163	PLATE, 3-4 CLU BKG (3.90MM-4.10MM) (AC-DELCO #24212459)	94	F (M30)	1	24212459
	6-A24	4.163	PLATE, 3-4 CLU BKG (SELECTIVE) (4.79-4.99MM THK) (AC-DELCO #24211896)	94	F (M30)	1	24211896
656.	6-A24	4.163	RING, 3-4 CLU BKG PLT RET (AC-DELCO #8663636)	94	F (M30)	1	8663636
657.	6-A23	4.159	BUSHING, INPUT SUN GR FRT (ALSO PART OF 658) (FRT & RR) (AC-DELCO #8642181)	94	F (M30)	2	8642181
658.	6-A23	4.159	GEAR, INPUT SUN (INCL 657, 659) (AC-DELCO #24213007)	94	F (M30)	1	24213007
659.	6-A23	4.159	BUSHING, INPUT SUN GR FRT (REAR) (ALSO PART OF 658) (FRT & RR) (AC-DELCO #8642181)	94	F (M30)	2	8642181
661.	6-B8	4.176	RING, OUTPUT SHF RET (TO INPUT CARR) (*KIT2, KIT3, KIT4) (AC-DELCO #8654141)	94	F (M30)	1	8654141
662.	6-B8	4.175	CARRIER, INPUT (COMPL) (AC-DELCO #24212177)	94	F (M30)	1	24212177
663.	6-A23	4.159	BEARING, INT REACTION GR SUPT THR (AC-DELCO #8642191)	94	F (M30)	1	8642191
664.	6-A23	4.158	GEAR, INPUT INTL (AC-DELCO #8663639)	94	F (M30)	1	8663639
665.	6-B8	4.176	BUSHING, REACTION CARR SHF FRT (ALSO PART OF 666) (AC-DELCO #8642908)	94	F (M30)	1	8642908
666.	6-B8	4.175	SHAFT, REACTION CARR (INCL 665, 667) (AC-DELCO #8681518)	94	F (M30)	1	8681518

cardiagn.com

667.	6-B8	4.176	**BUSHING**, REACTION CARR SHF RR (ALSO PART OF 666) (AC-DELCO #8642907)	94	F (M30)	1	8642907
668.	6-B8	4.176	**RING**, REACTION CARR SHF RET (TO INT GR) (AC-DELCO #8642201)	94	F (M30)	1	8642201
669.	6-B8	4.176	**WASHER**, REACTION CARR SHF THR (TO SHELL) (08642202 TO BE USED ONLY WITH 08683439) (AC-DELCO #8642202)	94	F (M30)	1	8642202
670.	6-B8	4.175	**SHELL**, REACTION SUN GR (AC-DELCO #8683439)	94	F (M30)	1	8683439
671.	6-A23	4.159	**RING**, REACTION SUN GR RET (AC-DELCO #8681553)	94	F (M30)	1	8681553
672.	6-B8	4.176	**BUSHING**, REACTION SUN GR (ALSO PART OF 673) (AC-DELCO #8642909)	94	F (M30)	1	8642909
673.	6-A23	4.159	**GEAR**, REACTION SUN (INCL 672) (INCLS BUSH & GEAR) (INDIVIDUAL COMPONENTS NOT SOLD SEPARATELY) (AC-DELCO #8642204)	94	F (M30)	1	8642204
674.	6-A23	4.159	**WASHER**, REACTION SUN GR SHELL THR (4.176) (AC-DELCO #8642331)	94	F (M30)	1	8642331
675.	6-B9	4.180	**RACE**, LOW CLU RLR INR (AC-DELCO #8673300)	94	F (M30)	1	8673300
676.	6-B9	4.180	**RING**, LOW & REV CLU SUPT RET (AC-DELCO #24200278) ..	94	F (M30)	1	24200278
677.	6-B9	4.180	**RING**, LOW CLU RLR RET (OVERRUN) (AC-DELCO #6261051)	94	F (M30)	2	6261051
678.	6-B5	4.166	**SUPPORT**, LOW & REV CLU (INCL 679) (*KIT6) (4.180) (AC-DELCO #8681727)	94	F (M30)	1	8681727
679.		N.S.	**SUPPORT**, LO & REV CLU (PART OF 678) (*KIT6)		.....		
680.	6-B9	4.180	**SPRING**, LOW & REV CLU SUPT (RET) (AC-DELCO #6261415) ..	94	F (M30)	1	6261415
681.	6-B8	4.175	**CARRIER**, REACTION (W/DEFLECTOR) (HI-SPEED) (INCL 697) (AC-DELCO #8654200)	94	F (M30)	1	8654200
682.	6-A24	4.163	**PLATE**, LOW & REV CLU (WAVED) (ILLUSTRATED AS 682A) (*KIT3, KIT6) (AC-DELCO #8676362)	94	F (M30)	1	8676362
	6-A24	4.163	**PLATE**, LOW & REV CLU (ID 4, 8, 0) (ILLUSTRATED AS 682B) (1.314MM) (SELECTIVE) (*KIT3, KIT6) (AC-DELCO #8680440) ...	94	F (M30)	1	8680440
	6-A24	4.163	**PLATE**, LOW & REV CLU (ILLUSTRATED AS 682B) (2.344MM) (HAS HOLES IN TURB PLATES) (*KIT3, KIT6) (AC- DELCO #24205270)	94	F (M30)	1	24205270

cardiagn.com

	6-A24	4.163	PLATE, LOW & REV CLU (ILLUSTRATED AS 682C) (NON-SEGMENTED COMPLETE SET OF 5) (*KIT3, KIT6, KIT8) (AC-DELCO #8684089)	94	F (M30)	AR	8684089
	6-A24	4.163	PLATE, LOW & REV CLU (ILLUSTRATED AS 682D) (1.829MM) (HAS HOLES IN TURB PLATES) (STEEL) (*KIT3, KIT6) (AC-DELCO #24205268)	94	F (M30)	AR	24205268
683.	6-A23	4.159	BEARING, REACTION CARR THR (4.176) (AC-DELCO #8642215)	94	F (M30)	1	8642215
	6-A23	4.159	BEARING, DIFF CARR SUN GR THR (AC-DELCO #8646254)	94	F (M30)	1	8646254
684.	6-A23	4.158	GEAR, REACTION INTL (AC-DELCO #8667055)	94	F (M30)	1	8667055
685.	6-B8	4.175	SUPPORT, REACTION INTL GR (AC-DELCO #8681491)	94	F (M30)	1	8681491
686.	6-B8	4.176	RING, INT REACTION GR SUPT RET (AC-DELCO #8642220)	94	F (M30)	1	8642220
687.	6-B8	4.175	SHAFT, OUTPUT (AC-DELCO #8683819)	94	F (M30)	1	8683819
690.		N.S.	SLEEVE, OUTPUT SHF (NOT REQD)				
691.		N.S.	SEAL, OUTPUT SHF (NOT REQ'D) (*KIT2, KIT3)				
692.	6-A23	4.159	BEARING, REACTION CARR THR (AC-DELCO #8642191)	94	F (M30)	1	8642191
693.	6-B5	4.164	RING, LOW & REV CLU SPR RET RET (*KIT4, KIT6) (4.159) (AC-DELCO #8647337)	94	F (M30)	1	8647337
694.	6-B5	4.164	SPRING, LOW & REV CLU (AC-DELCO #8642227)	94	F (M30)	1	8642227
695.	6-B5	4.166	PISTON, LOW & REV CLU (*KIT6) (AC-DELCO #8685549)	94	F (M30)	1	8685549
696.	6-B10	4.189	SEAL KIT, LOW & REV CLU (INCLS INR, OTR & INTER SEALS) (*KIT2, KIT3, KIT6) (4.166) (AC-DELCO #8648987)	94	F (M30)	1	8648987
697.		N.S.	DEFLECTOR, OIL (PART OF 681)				
698.	6-B13	4.224	ORIFICE, LUB FLUID (4.3MM DIA) (AC-DELCO #8663707)	94	F (M30)	1	8663707
699.	6-C11	4.343	WHEEL, VEH SPD SEN RELUCTOR (AC-DELCO #24202711)	94	F (M30)	1	24202711

SERVICE KITS

1.	6-B5	4.166	SEAL KIT, 3-4 CLU PSTN (FOA) (INCL 622, 624, 629, 631, 636) (AC-DELCO #8642919)	94	F (M30)	1	8642919
2.	6-A12	4.005	GASKET KIT, A/TRNS SERV (INCL 608, 618-19, 622, 624, 629, 631, 636, 661, 691, 696) (W/O PLATES OR PISTONS) (AC-DELCO #24201803)	94	F (M30)	1	24201803

cardiagn.com

3.		N.S.	TRANSMISSION KIT, AUTO (SERV OVERHAUL W/PLT, GSKT, SEAL) (USE 24201803 GASKET KIT T/W 24201807 PLATE KIT T/W 24204496 PISTON KIT.)				
4.	6–A12	4.005	RING KIT, RET (INCL 610, 635, 638, 661, 693) (AC–DELCO #8642910)	94	F (M30)	1	8642910
5.	6–A24	4.163	PLATE KIT, FWD CLU (INCL 649, 702) (INCLS INST SHEET & PLATES) (AC–DELCO #8647991)	94	F (M30)	1	8647991
6.	6–A24	4.163	PLATE KIT, LOW & REV CLU (W/SUPT) (W/PSTN) (INCL ITEMS 678–9, 682, 693, 695–6) (STEEL PLATES) (AC–DELCO #8687996)	94	F (M30)	1	8687996
7.	6–A24	4.163	PLATE KIT, 3–4 CLU (INCL 654) (1.97MM THK) (AC–DELCO #8671900)	94	F (M30)	1	8671900
8.	6–A24	4.163	PLATE KIT, CLU (INCL 612A, 645A, 649, 654A, 682C) (HAS 2050 STAMPED ON PART) (AC–DELCO #24201807) (INCLS ALL FIBER & STEEL CLU PLTS, USED W/OVERHAUL GSKT KIT FOR COMPL OVERHAUL)	94	F (M30)	1	24201807
9.	6–A14	4.056	CONVERSION KIT, C/VLV CALN (INCL 607, 628) (4.265) (AC–DELCO #24202269)	94	F (L32, M30)	1	24202269
	6–A14	4.056	CONVERSION KIT, C/VLV CALN (INCL 607, 628) (4.265) (AC–DELCO #24202270)	94	F (LT1, M30)	1	24202270

RPO DEFINITIONS

GU5 – AXLE,REAR,3.23 RATIO
LT1 – ENGINE–GAS, 8 CYL, 5.7L(5.7P),MFI,HO
L32 – ENGINE,3 4L,V6,(3.4S),SFI,OHV
M30 – TRANSMISSION,AUTOMATIC 4 SPEED,4L60E,ELECTRONIC

cardiagn.com

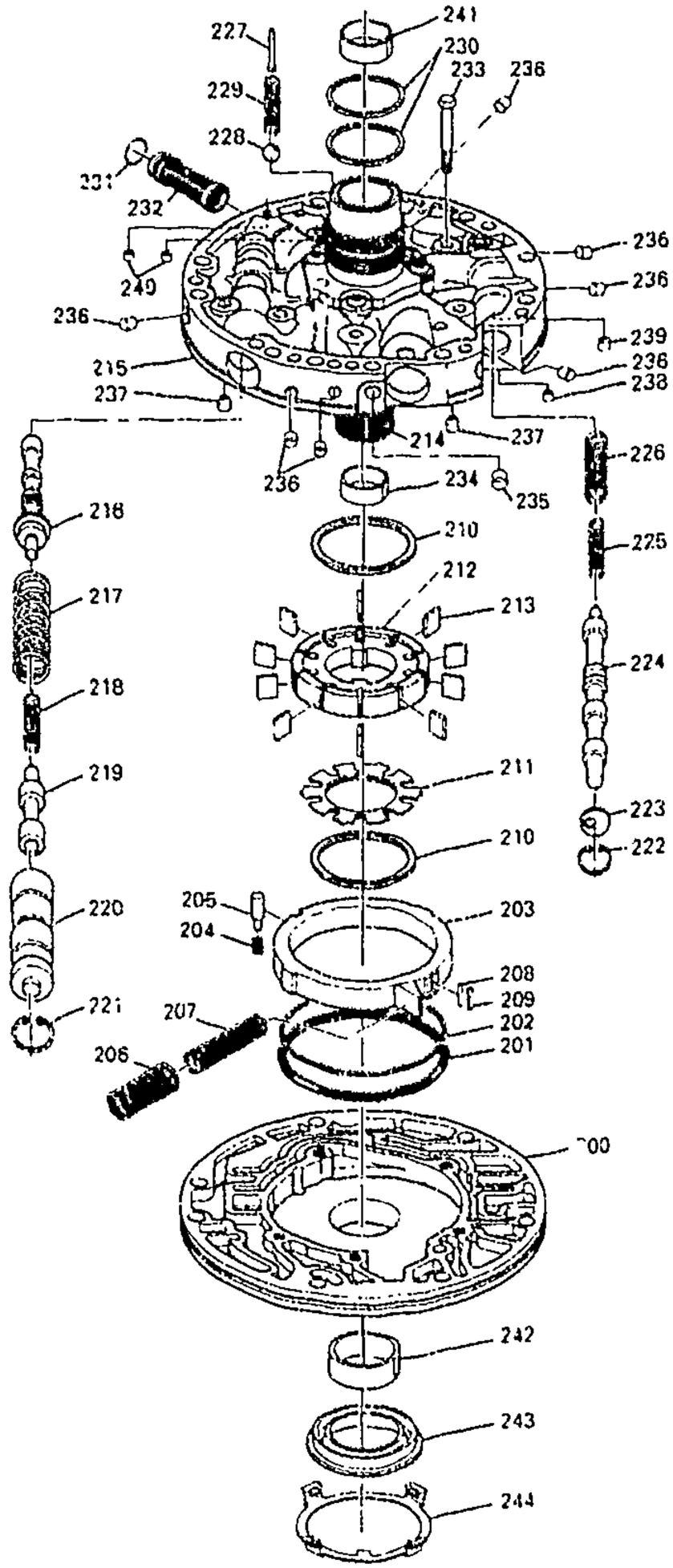

GM04-419F

1994 F AUTOMATIC TRANSMISSION (M30) PART 4 (4L60E) OIL PUMP

200.	6-B13	4.224	BODY, A/TRNS FLUID PUMP (INCL 201 THRU 213, 242 THRU 244) (10 VANE) (INCLS BODY, GUIDE, RING, RET. ROTOR, PIN, SEAL KIT, SLIDE, SPR&VANE) (AC-DELCO #8649964)	94 F (M30)	1	8649964

cardiagn.com

201.		N.S.	**RING**, A/TRNS FLUID PUMP SLIDE FLUID SEAL (ALSO PART OF 200, 212) (*KIT1, KIT2, KIT3) .				
202.		N.S.	**SEAL**, A/TRNS O/PMP SLIDE (O RING) (ALSO PART OF 200, 212) (*KIT1, KIT2, KIT3)				
203.	6-B13	4.224	**SLIDE**, A/TRNS FLUID PUMP (ALSO PART OF 200) (17.987 MM) (AC-DELCO #8634084) ...	94	F (M30)	1	8634084
	6-B13	4.224	**SLIDE**, A/TRNS FLUID PUMP (ALSO PART OF 200) (18.007 MM) (AC-DELCO #8634085) ...	94	F (M30)	1	8634085
	6-B13	4.224	**SLIDE**, A/TRNS FLUID PUMP (ALSO PART OF 200) (17.948MM) (AC-DELCO #24208304)	94	F (M30)	1	24208304
	6-B13	4.224	**SLIDE**, A/TRNS FLUID PUMP (ALSO PART OF 200) (17.961 MM) (AC-DELCO #24208305) ..	94	F (M30)	1	24208305
	6-B13	4.224	**SLIDE**, A/TRNS FLUID PUMP (ALSO PART OF 200) (AC-DELCO #24208306)	94	F (M30)	1	24208306
204.	6-B17	4.226	**SPRING**, A/TRNS FLUID PUMP SLIDE PIV PIN (ALSO PART OF 200) (AC-DELCO #8634098) ...	94	F (M30)	1	8634098
205.	6-B17	4.226	**PIN**, A/TRNS FLUID PUMP SLIDE PIV (ALSO PART OF 200) (AC-DELCO #8634097)	94	F (M30)	1	8634097
206.	6-B17	4.226	**SPRING**, A/TRNS FLUID PUMP SLIDE OTR (ALSO PART OF 200) (AC-DELCO #8639563)	94	F (M30)	1	8639563
207.	6-B17	4.226	**SPRING**, A/TRNS FLUID PUMP SLIDE INR (ALSO PART OF 200) (AC-DELCO #8639562)	94	F (M30)	1	8639562
208.		N.S.	**SUPPORT**, A/TRNS FLUID PUMP SLIDE SEAL (PART OF 200, 212) (*KIT1, KIT2, KIT3)				
209.		N.S.	**SEAL**, A/TRNS FLUID PUMP SLIDE (PART OF 200, 212) (*KIT1, KIT2, KIT3)				
210.	6-B17	4.226	**RING**, A/TRNS FLUID PUMP VANE (ALSO PART OF 200) (AC-DELCO #24201144)	94	F (M30)	2	24201144
211.	6-B17	4.226	**GUIDE**, A/TRNS FLUID PUMP ROT (ALSO PART OF 200, 212) (10 VANE) (ALSO PART OF ROTOR KITS) (AC-DELCO #12337830)	94	F (M30)	1	12337830
212.	6-B12	4.210	**ROTOR**, A/TRNS FLUID PUMP (ALSO PART OF 200) (INCL 201-2, 208-9, 211, 213) (17.955MM) (W/GDE, VANES & SEALS) (4.224) (AC-DELCO #8649951)	94	F (M30)	1	8649951

cardiagn.com

	6-B12	4.210	ROTOR, A/TRNS FLUID PUMP (ALSO PART OF 200) (INCL 201-2, 208-9, 211, 213) (17.968MM) (W/GDE, VANES & SEALS) (4.224) (AC-DELCO #8649952)	94	F (M30)	1	8649952
	6-B12	4.210	ROTOR, A/TRNS FLUID PUMP (ALSO PART OF 200) (INCL 201-2, 208-9, 211, 213) (17 981MM) (W/GDE, VANES & SEALS) (4.224) (AC-DELCO #8649953)	94	F (M30)	1	8649953
	6-B12	4.210	ROTOR, A/TRNS FLUID PUMP (ALSO PART OF 200) (INCL 201-2, 208-9, 211, 213) (17.994MM) (W/GDE, VANES & SEALS) (4.224) (AC-DELCO #8649954)	94	F (M30)	1	8649954
	6-B12	4.210	ROTOR, A/TRNS FLUID PUMP (ALSO PART OF 200) (INCL 201-2, 208-9, 211, 213) (18.007MM) (W/GDE, VANES & SEALS) (4.224) (AC-DELCO #8649955)	94	F (M30)	1	8649955
213.	6-B17	4.226	VANE, A/TRNS FLUID PUMP (ALSO PART OF 200, 212) (AC-DELCO #8631280)	94	F (M30)	10	8631280
214.		N.S.	SHAFT, STATOR (PART OF 215)				
215.	6-B13	4.224	COVER, A/TRNS FLUID PUMP (INCL 214, 216 THRU 221, 223 THRU 232) (AC-DELCO #24200314)	94	F (L32 M30)	1	24200314
	6-B13	4.224	COVER, A/TRNS FLUID PUMP (INCL 214, 216 THRU 221, 223 THRU 232) (AC-DELCO #24201277)	94	F (LT1, M30)	1	24201277
216.	6-B25	4.262	VALVE, PRESS REG (ALSO PART OF 215) (4.216) (AC- DELCO #8684049)	94	F (M30)	1	8684049
217.	6-B25	4.262	SPRING, PRESS REG VLV OTR (ALSO PART OF 215) (4.216) (AC-DELCO #8680682)	94	F (M30)	1	8680682
218.	6-B25	4.262	SPRING, PRESS REG VLV INR (ALSO PART OF 215) (AC-DELCO #8680684)	94	F (M30)	1	8680684
219.		N.S.	VALVE, REV BOOST (PART OF 215) (*KIT4)				
220.		N.S.	SLEEVE, REV BOOST VLV (PART OF 215) (*KIT4)				
221.	6-B25	4.265	RING, T/V BOOST VLV BUSH RET (ALSO PART OF 215) (*KIT5) (4.216) (AC-DELCO #11503348)	94	F (M30)	1	11503348
222.		8.934	RING, TYPE TA INT RET 060X 68X 037PL (ALSO PART OF 215) (*KIT5) (AC-DELCO #274267)	94		AR	274267

cardiagn.com

223.	6-B25	4.262	**STOP**, TCC VLV (ALSO PART OF 215) (4.216) (AC-DELCO #8634705)	94	F (M30)	1	8634705
224.	6-B25	4.265	**VALVE**, TCC (ALSO PART OF 215) (AC-DELCO #8634031) ...	94	F (M30)	1	8634031
225.	6-B25	4.265	**SPRING**, TCC VLV INR (ALSO PART OF 215) (4.216) (AC-DELCO #8634378)	94	F (M30)	1	8634378
226.	6-B25	4.265	**SPRING**, TCC VLV OTR (ALSO PART OF 215) (4.216) (AC-DELCO #8634399)	94	F (M30)	1	8634399
227.	6-B25	4.262	**RIVET**, PRESS RLF BALL VLV SPR (ALSO PART OF 215) (4.216) (AC-DELCO #8642619)	94	F (M30)	1	8642619
228.		8.899	**BALL**, 3/8 STEEL (CLU PRESS RLF VLV) (AC-DELCO #7826284)	94	.....	AR	7826284
229.	6-B25	4.265	**SPRING**, PRESS RLF BALL VLV (AC-DELCO #8634106)	94	F (M30)	1	8634106
230.	6-B17	4.226	**RING**, REV INPUT CLU HSG FLUID SEAL (*KIT1, KIT2) (AC-DELCO #8681292)	94	F (M30)	2	8681292
231.	6-B13	4.224	**SEAL**, A/TRNS FLUID PUMP CVR SCRN (ALSO PART OF 215, 232) (AC-DELCO #8642581)	94	F (M30)	1	8642581
232.	6-B13	4.224	**SCREEN**, A/TRNS FLUID PUMP CVR (ALSO PART OF 215) (INCL 231) (AC-DELCO #8642912) ...	94	F (M30)	1	8642912
233.		8.900	**BOLT**, HEX, 8X1.25X40, 33.2 THD, GM 500M, 10.9, PC, MACH (AC-DELCO #11500921)	94	.....	AR	11500921
234.	6-B17	4.226	**BUSHING**, INPUT SHF FRT (ALSO PART OF 215) (AC-DELCO #8647954)	94	F (M30)	1	8647954
235.		N.S.	**PLUG**, A/TRNS FLUID PUMP CVR (REQ'D ON TRANS W/O AUX VLV BODY)		.....		
236.	6-B13	4.224	**PLUG**, A/TRNS FLUID PUMP CVR (ALSO PART OF 215) (6.80MM DIA) (AC-DELCO #8623886) ...	94	F (M30)	8	8623886
237.	6-A20	4.123	**VALVE**, FWD CLU HSG BALL CHK (ALSO PART OF 215) (SINGLE ORIFICE) (TALL & NARROW) (4.226) (AC-DELCO #8628732)	94	F (LT1, M30)	1	8628732
	6-A20	4.123	**VALVE**, FWD CLU HSG BALL CHK (ALSO PART OF 215) (RET) (4.169) (AC-DELCO #8654438) .	94	F (L32, M30)	1	8654438
238.	6-B13	4.224	**ORIFICE**, TCC SIG (ALSO PART OF 215) (4.85MM DIA) (AC-DELCO #8634284)	94	F (M30)	1	8634284
239.	6-A21	4.128	**PLUG**, A/TRNS O/PMP FLUID CLR HOLE (ALSO PART OF 215) (6.84MM DIA) (AC-DELCO #8634285)	94	F (M30)	1	8634285
240.	6-B13	4.224	**ORIFICE**, A/TRNS FLUID PUMP AIR BL (ALSO PART OF 215) (AC-DELCO #24203787)	94	F (M30)	1	24203787

cardiagn.com

241.	6–B17	4.226	**BUSHING**, INPUT SHF RR (AC–DELCO #8642904)	94	F (M30)	1	8642904
242.	6–A17	4.115	**BUSHING**, T/CV (ALSO PART OF 200) (AC–DELCO #24206030) .	94	F (M30)	1	24206030
243.	6–B17	4.226	**SEAL**, T/CV FLUID (ALSO PART OF 200) (AC–DELCO #24202535)	94	F (M30)	1	24202535
244.	6–B17	4.226	**RETAINER**, T/CV FLUID SEAL (ALSO PART OF 200) (*KIT1, KIT2) (AC–DELCO #8654491) ...	94	F (M30)	1	8654491

SERVICE KITS

1.	6–A12	4.005	**GASKET KIT**, A/TRNS SERV (INCL 201, 202, 208–9, 230, 244) (W/O PLATES OR PISTONS) (AC–DELCO #24201803)	94	F (M30)	1	24201803
2.		N.S.	**TRANSMISSION KIT**, AUTO (SERV OVERHAUL W/PLT, GSKT, SEAL) (USE 24201803 GASKET KIT T/W 24201807 PLATE KIT T/W 24204496 PISTON KIT.)		....		
3.	6–B17	4.226	**SEAL KIT**, A/TRNS FLUID PUMP SLIDE (INCL 201–2, 208–9) (INCLS RING, SEALS&SUPT) (AC–DELCO #8634906)	94	F (M30)	1	8634906
4.	6–B25	4.265	**VALVE KIT**, REV BOOST (INCL 219, 220) (INCLS BUSHING & VALVE) (AC–DELCO #8685949) .	94	F (L32, M30)	1	8685949
	6–B25	4.265	**VALVE KIT**, REV BOOST (INCL 219, 220) (AC–DELCO #24200372)	94	F (LT1, M30)	1	24200372
5.	6–A12	4.005	**RING KIT**, RET (INCL 221, 222) (AC–DELCO #8642910)	94	F (M30)	1	8642910

RPO DEFINITIONS
LT1 – ENGINE–GAS, 8 CYL, 5.7L(5.7P),MFI,HO
L32 – ENGINE,3.4L,V6,(3.4S),SFI,OHV
M30 – TRANSMISSION,AUTOMATIC 4 SPEED,4L60E,ELECTRONIC

cardiagn.com

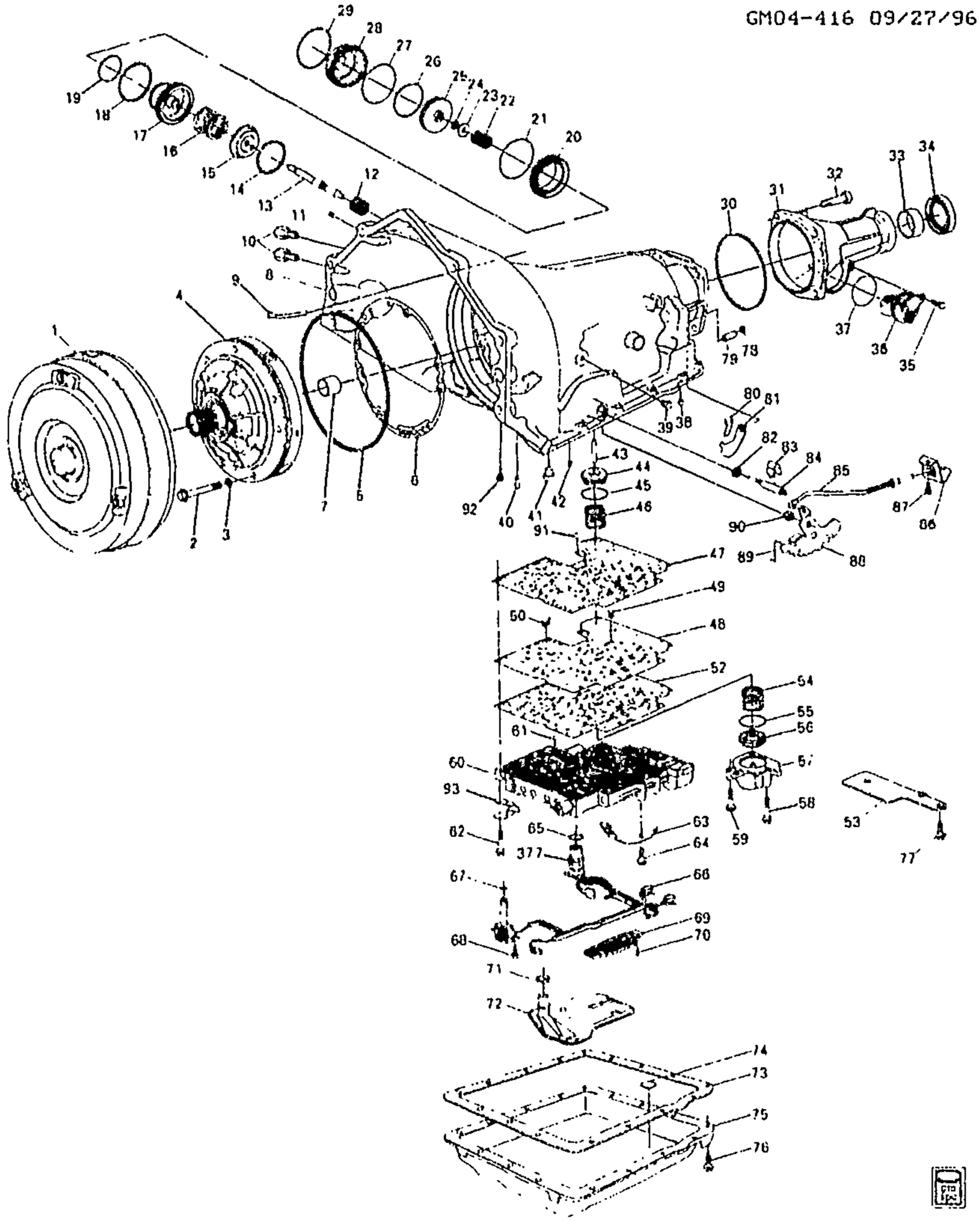

GM04-416F

1994-1995 F AUTOMATIC TRANSMISSION (M30) PART 1 (4L60E) CASE & RELATED PARTS/PARK LOCK LINKAGE

1.	6-A17	4.115	CONVERTER, TORQ (REMAN) (CODE DGHO)	94-95	F (LT1, M30)	1	24202174
	6-A17	4.115	CONVERTER, TORQ (REMAN) (CODE HEHD)	94	F (L32, M30)	1	24202947
	6-A17	4.115	CONVERTER, TORQ (REMAN) (CODE HLHD)	95	F (L32, M30)	1	24203426

cardiagn.com

	6–A17	4.115	CONVERTER, TORQ (REMAN) (CODE HLHD)	95	F (L36, M30)	1	24203426
2.	6–B17	4.226	BOLT, A/TRNS FLUID PUMP (M8X1.25X60) (INCLS SEAL) (*KIT1, KIT2) (AC–DELCO #24210819)	94–95	F (M30)	7	24210819
3.	6–B17	4.226	SEAL, A/TRNS FLUID PUMP BOLT (AC–DELCO #12337996)	94–95	F (M30)	7	12337996
4.		N.S.	PUMP, A/TRNS OIL (SEE PUMP ILLUSTRATION)				
5.	6–B17	4.226	SEAL, A/TRNS FLUID PUMP (*KIT1, KIT2) (AC–DELCO #24210605)	94–95	F (M30)	1	24210605
6.	6–B17	4.226	GASKET, A/TRNS FLUID PUMP (TO CASE) (*KIT1, KIT2, KIT9) (AC–DELCO #12337931)	94–95	F (M30)	1	12337931
7.	6–N28	5.556	BUSHING, PROP SHF FRT SLIP YOKE (PART OF 8) (INSIDE DIA 1.506–1.509) (PART OF TRANS CASE) (4.104) (AC–DELCO #8680027)	94–95	F (M30)	1	8680027
8.	6–A16	4.103	CASE KIT, A/TRNS (INCL 7, 8) (REMAN) (AC–DELCO #24212401)	94	F (LT1, M30)	1	24212401
	6–A16	4.103	CASE, A/TRNS (REMAN) (INCL 7, 8) (AC–DELCO #24212159)	95	F (L32, M30, GU5)	1	24212159
	6–A16	4.103	CASE, A/TRNS (REMAN) (INCL 7, 8) (AC–DELCO #24212157)	95	F (LT1, M30)	1	24212157
	6–A16	4.103	CASE, A/TRNS (REMAN) (INCL 7, 8) (AC–DELCO #24212159)	95	F (L36, M30)	1	24212159
9.	6–A16	4.104	PIPE, A/TRNS VENT (AC–DELCO #24200374)	94	F (M30)	1	24200374
	6–A16	4.104	PIPE, A/TRNS VENT	95	F (M30)	1	24202440
10.	6–A21	4.128	FITTING, TRANS FLUID CLR PIPE (TO CASE) (5/16) (AC–DELCO #8637742)	94–95	F (M30)	2	8637742
11.	6–A17	4.105	ORIFICE, 3RD ACCUM BL (6.4MM DIA) (NO DIMPLE) (4.104) (AC–DELCO #8628864)	94–95	F (M30)	1	8628864
12.	6–B22	4.233	SPRING, 2–4 BAND SERVO RTN (ORANGE) (AC–DELCO #8642273)	94–95	F (M30)	1	8642273
13.	6–B24	4.246	PIN, 2–4 BAND SERVO PSTN (I.D BY 1 GROOVE IN TAPPERED POINT) (4.228) (AC–DELCO #8680499)	94–95	F (M30)	1	8680499
	6–B24	4.246	PIN, 2–4 BAND SERVO PSTN (I.D BY 2 GROOVES IN TAPERED POINT) (4.228) (AC–DELCO #8680500)	94–95	F (M30)	1	8680500
	6–B24	4.246	PIN, 2–4 BAND SERVO PSTN (I.D BY NO GROOVES IN TAPPERED POINT) (4.228) (AC–DELCO #8680501)	94–95	F (M30)	1	8680501
14.	6–B8	4.176	RING, 2–4 BAND SERVO 2ND APPL PSTN RET (AC–DELCO #8642105)	94–95	F (M30)	1	8642105

cardiagn.com

15.	6–B22	4.233	RETAINER, 2–4 BAND SERVO CUSH SPR (AC–DELCO #8642416)	94–95	F (M30)	1	8642416
16.	6–B22	4.233	SPRING, 2–4 BAND SERVO PSTN CUSH (PINK) (AC–DELCO #8642539) (PINK 140 LBS)	94–95	F (M30)	1	8642539
17.		N.S.	PISTON, 2–4 BAND SERVO 2ND APPLY (*KIT8)				
18.		N.S.	RING, LOW & REV ACCUM PSTN OTR FLUID SEAL (*KIT1, KIT2, KIT5, KIT8)				
19.		N.S.	RING, LOW & REV ACCUM PSTN INR FLUID SEAL (*KIT1, KIT2, KIT5, KIT8)				
20.	6–B18	4.228	HOUSING, 2–4 BAND SERVO 2ND APPL (SERVO PISTON) (INNER) (AC–DELCO #8673039) (ALSO USE SEAL 08642112)	94–95	F (LT1, M30)	1	8673039
	6–B18	4.228	HOUSING, 2–4 BAND SERVO 2ND APPL (SERVO PISTON) (INNER) (.55) (AC–DELCO #8673041)	94–95	F (L32, M30)	1	8673041
	6–B18	4.228	HOUSING, 2–4 BAND SERVO 2ND APPL (SERVO PISTON) (INNER) (.48) (AC–DELCO #8642463)	95	F (L36, M30)	1	8642463
21.	6–B21	4.229	SEAL, 2–4 BAND SERVO 2ND APPL PSTN HSG (O RING) (*KIT1, KIT2) (AC–DELCO #8642112)	94–95	F (M30)	1	8642112
22.	6–B24	4.246	SPRING, 2–4 BAND SERVO PSTN (AC–DELCO #24207758)	94–95	F (M30)	1	24207758
23.	6–B22	4.233	WASHER, 2–4 BAND SERVO PIN (3/8) (AC–DELCO #8642107)	94–95	F (M30)	1	8642107
24.		8.934	RETAINER, SNAP RING BOWED EXT .FITS SHFT 7/16 PL (OUTPUT SHF) (AC–DELCO #9415640)	94–95		AR	9415640
25.	6–B18	4.228	PISTON, 2–4 BAND SERVO 4TH APPLY (W/RING) (AC–DELCO #8642478)	94–95	F (M30)	1	8642478
26.	6–B21	4.229	RING, 2–4 BAND SERVO PSTN FLUID SEAL (*KIT1, KIT2) (AC–DELCO #8642480)	94–95	F (M30)	1	8642480
27.	6–B21	4.229	SEAL, 2–4 BAND SERVO CVR (O RING) (ALSO PART OF 28) (*KIT1, KIT2) (AC–DELCO #8647351)	94–95	F (M30)	1	8647351
28.	6–B18	4.228	COVER, 2–4 SERVO (W/SEAL) (INCL 27) (INCLS RING) (4.241) (AC–DELCO #8642979)	94–95	F (M30)	1	8642979
29.	6–B18	4.228	RING, 2–4 BAND SERVO CVR RET (AC–DELCO #8642124)	94–95	F (M30)	1	8642124
30.	6–C7	4.318	SEAL, A/TRNS CASE EXTN (*KIT1, KIT2) (AC–DELCO #1358899)	94–95	F (M30)	1	1358899

cardiagn.com

31.	6–C7	4.317	**EXTENSION**, A/TRNS CASE (REMAN) (W/ BUSHING ONLY) (AC–DELCO #24214688)	94–95	F (M30)	1	24214688
32.		8.900	**BOLT**, M10X1.5X27 (EXTN TO CASE)	94–95		AR	11503428
33.	6–N28	5.556	**BUSHING**, PROP SHF FRT SLIP YOKE (INSIDE DIAM 1.506–1.504 (PT OF TRANS EXT) (AC–DELCO #24207915)	94–95	F (M30)	1	24207915
34.	6–C7	4.318	**SEAL**, PROP SHF FRT SLIP YOKE OIL (NON BOOTED) (*KIT1, KIT2) (AC–DELCO #8673526)	94–95	F (M30)	1	8673526
35.	6–C8	4.329	**BOLT**, VEH SPD SEN	94–95	F (M30)	1	8655314
36.	6–C8	4.329	**SENSOR**, VEH SPD (INCL 37) (AC–DELCO #213–194)	94–95	F (M30)	1	8673299
	6–N23	3.682	**SENSOR**, VEH SPD (INCL 37) (4.329) (AC–DELCO #213–194)	94–95	F (M30)	1	8673299
37.	6–C11	4.336	**SEAL**, VEH SPD SEN (O RING) (PART OF 36) (TEFLON) (AC–DELCO #15552872)	94–95	F (M30)	1	15552872
38.	6–A17	4.105	**ORIFICE**, 3RD ACCUM BL (6.4MM DIA) (NO DIMPLE) (4.104) (AC–DELCO #8628864)	94–95	F (M30)	1	8628864
39.		8.971	**PLUG**, 1/8 NPTF (OIL PRESS TEST HOLE) (AC–DELCO #444613)	94–95		1	444613
40.	6–B18	4.228	**VALVE**, 3RD ACCUM BALL CHK (W/BALL) (AC–DELCO #8634400)	94–95	F (M30)	1	8634400
41.	6–B21	4.229	**PIN**, 2–4 BAND ANC (AC–DELCO #8654581)	94–95	F (M30)	1	8654581
42.	6–B9	4.180	**VALVE**, A/TRNS FLUID/PUMP CVR BALL CHK (PART OF 8) (DOUBLE ORIFICE) (W/BALL) (AC–DELCO #8663890)	94–95	F (M30)	3	8663890
43.	6–B18	4.228	**PIN**, 3–4 ACCUM PSTN (4.226) (AC–DELCO #8628273)	94–95	F (M30)	1	8628273
44.	6–B18	4.228	**PISTON**, 3–4 ACCUM (*KIT6) (AC–DELCO #8663608)	94–95	F (M30)	1	8663608
45.	6–B21	4.229	**RING**, 3–4 ACCUM PSTN FLUID SEAL (*KIT1, KIT2, KIT6) (AC–DELCO #24206509)	94–95	F (M30)	1	24206509
46.	6–B22	4.233	**SPRING**, 3–4 ACCUM PSTN (BLUE) (AC–DELCO #8639074)	94–95	F (M30)	1	8639074
47.		N.S.	**GASKET**, C/VLV BODY (*KIT1, KIT2, KIT4, KIT9)				
48.	6–B25	4.265	**PLATE**, C/VLV BODY SPCR (AC–DELCO #24201473)	94	F (L32, M30, GU5)	1	24201473
	6–B25	4.265	**PLATE**, C/VLV BODY SPCR (AC–DELCO #24201474)	94	F (LT1, M30, GU2, GU5)	1	24201474
	6–B25	4.265	**PLATE**, C/VLV BODY SPCR (AC–DELCO #24201494)	95	F (LT1, M30)	1	24201494
	6–B25	4.265	**PLATE**, C/VLV BODY SPCR (AC–DELCO #24202237) (TRANS W/JULIAN DATE 95–092 & PRIOR, FOR 2ND DES SEE 24203918)	95	F (L32, M30) (1ST DES)	1	24202237

cardiagn.com

	6-B25	4.265	PLATE, C/VLV BODY SPCR (AC-DELCO #24202813)	95	F (L36, M30)	1	24202813
	6-B25	4.265	PLATE, C/VLV BODY SPCR (AC-DELCO #24203918) (TRANS W/JULIAN DATE 95-093 & CURRENT, FOR 1ST DES SEE 24202237.)	95	F (L32, M30) (2ND DES)	1	24203918
49.		N.S.	FILTER, SHFT SOL VLV FLUID (*KIT10)		.....		
50.	6-B25	4.265	FILTER, PRESS CONT SOL VLV FLUID (*KIT10) (AC-DELCO #8683768)	94-95	F (M30)	1	8683768
52.		N.S.	GASKET, C/VLV BODY SPCR PLT (*KIT1, KIT2, KIT4, KIT9)		.....		
53.	6-B12	4.197	COVER, A/TRNS CASE FLUID PASG (4.265) (AC-DELCO #8682792)	94-95	F (M30)	1	8682792
54.	6-B22	4.233	SPRING, 1-2 ACCUM PSTN (GREEN) (OTR) (*KIT7) (AC-DELCO #8654554)	94	F (LT1, M30)	1	8654554
	6-B22	4.233	SPRING, 1-2 ACCUM PSTN (INNER) (*KIT7) (AC-DELCO #8684431)	94	F (L32, M30, GU5) ...	1	8684431
	6-B22	4.233	SPRING, 1-2 ACCUM PSTN (INNER) (*KIT7) (AC-DELCO #8684570)	94	F (LT1, M30)	1	8684570
	6-B22	4.233	SPRING, 1-2 ACCUM PSTN (INNER) (*KIT7) (AC-DELCO #8684431)	95	F (L32, M30)	1	8684431
	6-B22	4.233	SPRING, 1-2 ACCUM PSTN (INNER) (*KIT7) (AC-DELCO #8684431)	95	F (L36, M30)	1	8684431
	6-B22	4.233	SPRING, 1-2 ACCUM PSTN (ORANGE) (INNER) (*KIT7) (AC-DELCO #8685655)	95	F (LT1, M30)	1	8685655
	6-B22	4.233	SPRING, 1-2 ACCUM PSTN (VIOLET) (OTR) (*KIT7) (AC-DELCO #24209794)	95	F (M30)	1	24209794
	6-B22	4.233	SPRING, 1-2 ACCUM PSTN (*KIT7) (AC-DELCO #24212030)	95	F (LT1, M30)	1	24212030
55.	6-B21	4.229	RING, 1-2 ACCUM PSTN FLUID SEAL (*KIT1, KIT2, KIT6, KIT7) (AC-DELCO #24206509)	94-95	F (M30)	1	24206509
56.		N.S.	PISTON, 1-2 ACCUM (*KIT1, KIT2, KIT6, KIT7)		.....		
57.	6-B18	4.228	COVER, 1-2 ACCUM (INCLS PIN) (*KIT7) (AC-DELCO #8686084)	94-95	F (M30)	1	8686084
	6-B18	4.228	PIN, 1-2 ACCUM PSTN (PART OF COVER) (*KIT7) (4.226) (AC-DELCO #8684426)	94-95	F (M30)	1	8684426
58.		8.900	BOLT, HFH M6X1X65 9.8 PL ...	94-95	.....	AR	11506078
59.		8.900	BOLT, HEX M6X1X35 10.9 PC (ACCUM CVR TO CASE) (AC-DELCO #11503870)	94-95	.....	AR	11503870
		8.929	WASHER, FLAT 5/16X5/8X1/16 ZP HARD	94-95	..	AR	2436162

cardiagn.com

60.	6-B25	4.265	VALVE KIT, CONT (W/BODY & VLV) (AC-DELCO #24204413)	95	F (L36, M30)	1	24204413
	6-B25	4.265	VALVE, CONT (W/BODY & VLV) (REMAN) (AC-DELCO #24214832)	94	F (LT1, M30)	1	24214832
	6-B25	4.265	VALVE, CONT (W/BODY & VLV) (REMAN) (AC-DELCO #24214837)	94	F (L32, M30)	1	24214837
	6-B25	4.265	VALVE, CONT (W/BODY & VLV) (REMAN) (AC-DELCO #24214844)	95	F (LT1, M30)	1	24214844
	6-B25	4.265	VALVE, CONT (W/BODY & VLV) (REMAN) (AC-DELCO #24214849)	95	F (L32, M30)	1	24214849
61.		8.899	BALL, GRADE 2, STD DIA 1/4 (2), CHROME STL (AC-DELCO #104918)	94-95		AR	104918
62.	6-B25	4.265	BOLT, VLV BODY (M6X1X54.4) (AC-DELCO #8680741)	94-95	F (M30)	3	8680741
	6-B25	4.265	BOLT, VLV BODY (M6X1X47.5) (AC-DELCO #8680742)	94-95	F (M30)	9	8680742
	6-B25	4.265	BOLT, VLV BODY (M6X1X35) (8.900) (AC-DELCO #11503870)	94-95	F (M30)	2	11503870
	6-B25	4.265	BOLT, VLV BODY (M6X1X65) (8.900)	94-95	F (M30)	3	11506078
63.	6-C5	4.275	DETENT, MAN SHFT (CPS) (AC-DELCO #8642247)	94-95	F (M30)	1	8642247
	6-C6	4.293	PIN, MAN SHFT DTNT RLR (4.311) (AC-DELCO #6261174)	94-95	F (M30)	1	6261174
64.		8.900	BOLT-HEX M8X1.25X20, 16.88 THD, GM500 (10.9), PZOR, MACH (DTNT SPR TO VB) (AC-DELCO #11508687)	94-95		AR	11508687
65.		N.S.	SEAL, WRG HARN PASS-THRU CONN O-RING (PART OF ITEM 66)				
66.	6-M28	2.480	HARNESS, A/TRNS WRG (INCL 65, 67, 92) (INCLS TCC SOLENOID W/TCC DRAINDOWN FEATURE) (AC-DELCO #15320477)	94-95	F (M30)	1	15320477
67.		N.S.	SEAL, TCC SOL VLV (O RING) (PART OF 66)				
68.		8.900	BOLT, HEX M6X1X35 10.9 PC (TCC SOL VLV) (AC-DELCO #11503870)	94-95		AR	11503870
69.	6-B25	4.265	SWITCH, A/TRNS FLUID PRESS MAN VLV POSN (W/PLASTIC COVER) (AC-DELCO #24215111)	94-95	F (M30)	1	24215111
70.	6-B25	4.265	BOLT, A/TRNS FLUID PRESS MAN VLV POSN SW (M6X1X17.7) (AC-DELCO #8680764)	94-95	F (M30)	1	8680764
71.		N.S.	SEAL, A/TRNS FLUID FLTR (*KIT3)				
72.		N.S.	FILTER, A/TRNS FLUID (*KIT1, KIT2, KIT3)				

cardiagn.com

73.	6-B11	4.196	GASKET, A/TRNS FLUID PAN (ALSO PART OF 75) (*KIT1, KIT2, KIT3, KIT9) (AC-DELCO #8654799)	94-95	F (M30)	1	8654799
74.	6-B11	4.195	MAGNET, A/TRNS FLUID PAN (ALSO PART OF 75) (4.105) (AC-DELCO #8665830)	94-95	F (M30)	1	8665830
75.	6-B11	4.195	PAN KIT, A/TRNS FLUID (INCL 73, 74) (SHALLOW W/PAN, GSKT & MAGNET, DRAIN PLUG NOT INCLUDED) (AC-DELCO #8663948)	94-95	F (M30)	1	8663948
76.	6-B11	4.196	BOLT, A/TRNS FLUID PAN (M8X1.25X19, 16)	94-95	F (M30)	16	8657000
77.	6-B12	4.197	BOLT, FLUID PASG CVR (M6X1X17.7) (4.265) (AC-DELCO #8680764)	94-95	F (M30)	3	8680764
78.	6-C6	4.294	PLUG, PARK PAWL SHF HOLE (ALSO PART OF 79) (.38 DIA) (AC-DELCO #8620318)	94-95	F (M30)	1	8620318
79.	6-C6	4.294	PAWL KIT, PARK (INCLS 78, 81) (INST SHT, PAWL, PLUG & SHF) (AC-DELCO #8669911)	94-95	F (M30)	1	8669911
80.	6-C7	4.295	SPRING, PARK PAWL (AC-DELCO #8642193)	94-95	F (M30)	1	8642193
81.		N.S.	PAWL, PARK (PART OF 79)				
82.	6-C6	4.282	SEAL, MAN SHFT SHF (ALSO PART OF 84) (*KIT1, KIT2) (AC-DELCO #8657163)	94-95	F (M30)	1	8657163
83.	6-C5	4.275	RETAINER, MAN SHFT SHF (AC-DELCO #8642246)	94-95	F (M30)	1	8642246
84.	6-C6	4.294	SHAFT KIT, MAN SHFT (INCL 82) (128.2MM) (LONG) (INCLS SEAL) (AC-DELCO #24210711)	94-95	F (LT1, M30)	1	24210711
	6-C6	4.294	SHAFT KIT, MAN SHFT (INCL 82) (SHORT) (INCLS SEAL, INDIVIDUAL COMPONENT NOT SOLD SEPARATELY) (AC-DELCO #24210712)	94-95	F (M30)	1	24210712
85.	6-C6	4.290	ACTUATOR, PARK PAWL (INCLS ACTUATOR, ROD & SPRINGS) (AC-DELCO #8667517)	94-95	F (M30)	1	8667517
86.	6-C6	4.290	BRACKET, PARK PAWL ACTR (AC-DELCO #8667574)	94-95	F (M30)	1	8667574
87.		8.900	BOLT-HEX, M8X1.25X20, 16.88 THD, GM500 (10.9), FZOR, MACH (PARK LOCK BRACKET TO CASE) (AC-DELCO #11508687)	94-95		AR	11508687
88.	6-C6	4.279	LEVER, MAN SHFT DTNT (GOLD) (SQUARE HOLE) (AC-DELCO #8654106)	94-95	F (M30)	1	8654106
89.	6-C5	4.275	LINK, MAN VLV (*KIT1, KIT2) (AC-DELCO #8680731)	94-95	F (M30)	1	8680731
90.	6-C5	4.275	NUT, MAN SHFT DTNT LVR (M10X15.6H THD) (AC-DELCO #8648178)	94-95	F	1	8648178

cardiagn.com

							GM04-416F
91.		8.899	BALL, GRADE 2, STD DIA 1/4 (2), CHROME STL (NO. 10 CHECKBALL) (AC-DELCO #104918)	94-95		AR	104918
92.	6-B25	4.265	SCREEN, TCC SOL VLV (GOV FEED) (PART OF SOLENOID) (PART OF 66) (4.248) (AC-DELCO #12338044)	94	F (M30)	1	12338044
		N.S.	SCREEN, TCC SOL VLV (PART OF SOLENOID) (PART OF 66)	95			
93.	6-A22	4.133	STOP, TRANS FLUID LVL IND	94-95	F (M30)	1	8684890
377.		N.S.	VALVE, PRESS CONT SOL (*KIT10)				
SERVICE KITS							
	6-A9	4.003	TRANSMISSION, AUTO (GOODWRENCH REMAN) (CODE 4FDD)	94	F (L32, M30, GU5)	1	8690988
	6-A9	4.003	TRANSMISSION, AUTO (GOODWRENCH REMAN) (CODE 4FFD)	94	F (LT1, M30, GU2, GU5)	1	8690989
	6-A9	4.003	TRANSMISSION, AUTO (GOODWRENCH REMAN) (CODE 5FFD)	95	F (LT1, M30)	1	24202340
	6-A9	4.003	TRANSMISSION, AUTO (GOODWRENCH REMAN) (CODE 5FDD)	95	F (L32, M30)	1	24202341
	6-A9	4.003	TRANSMISSION, AUTO (GOODWRENCH REMAN) (CODE 5FCD)	95	F (L36, M30)	1	24203357
1.	6-A12	4.005	GASKET KIT, A/TRNS SERV (INCL 2, 5, 6, 18-9, 21, 26-7, 30, 34, 44-5, 47, 52, 55-6, 72-3, 82, 89) (W/O PLATES OR PISTONS) (AC-DELCO #24201803)	94-95	F (M30)	1	24201803
2.		N.S.	TRANSMISSION KIT, AUTO (SERV OVERHAUL W/PLT, GSKT, SEAL) (USE 24201803 GASKET KIT T/W 24201807 FOR 1994 OR 24201808 FOR 1995 PLATE KIT T/W 24204496 PISTON KIT.)				
3.	6-B12	4.197	FILTER KIT, A/TRNS FLUID (INCL 71-73) (USED W/SHALLOW PAN) (AC-DELCO #24200796)	94-95	F (M30)	1	24200796
4.	6-B25	4.265	GASKET KIT, C/VLV BODY SPCR PLT (INCL 47, 52) (AC-DELCO #8685951)	94-95	F (M30)	1	8685951
5.	6-B21	4.229	RING KIT, 2-4 BAND SERVO 2ND APPL PSTN FLUID SEAL (INCL 19) (.55 RATIO) (INCLS INR & OTR RING) (AC-DELCO #8642924)	94-95	F (M30)	1	8642924
	6-B21	4.229	RING KIT, 2-4 BAND SERVO 2ND APPL PSTN FLUID SEAL (INCL 18, 19) (.74 RATIO) (INCLS 2 RINGS) (AC-DELCO #8642925)	94-95	F (M30)	1	8642925

cardiagn.com

6.	6-B18	4.228	PISTON KIT, 1-2 & 3-4 ACCUM (INCL 44, 45, 55, 56) (W/RINGS & ALUM PISTONS) (AC-DELCO #24204496)	94-95	F (M30)	1	24204496
7.	6-B18	4.228	ACCUMULATOR, 1-2 (INCL 43, 54-7)	94-95	F (L32, M30)	1	8685756
	6-B18	4.228	ACCUMULATOR, 1-2 (INCL 43, 54-7) (AC-DELCO #8685760)	94	F (LT1, M30)	1	8685760
	6-B18	4.228	ACCUMULATOR, 1-2 (INCL 43, 54-7) (AC-DELCO #8684452)	95	F (L36, M30)	1	8684452
	6-B18	4.228	ACCUMULATOR, 1-2 (INCL 43, 54-7) (AC-DELCO #24201956)	95	F (LT1, M30)	1	24201956
8.	6-B18	4.228	PISTON KIT, 2-4 BAND SERVO 2ND APPLY (INCL 17, 18, 19) (YELLOW) (74) (AC-DELCO #8642079)	94-95	F (LT1, M30)	1	8642079
	6-B18	4.228	PISTON KIT, 2-4 BAND SERVO 2ND APPLY (INCL 17, 18, 19) (W/RINGS) (AC-DELCO #8642613)	94-95	F (L32, M30)	1	8642613
	6-B18	4.228	PISTON, 2ND APPLY (INCL 17, 18, 19) (.48) (AC-DELCO #8642614)	95	F (L36, M30)	1	8642614
9.	6-A14	4.056	CONVERSION KIT, C/VLV CALN (INCL 6, 47, 52, 73) (4.265) (AC-DELCO #24202269)	94	F (L32, M30)	1	24202269
	6-A14	4.056	CONVERSION KIT, C/VLV CALN (INCL 6, 47, 52, 73) (4.265) (AC-DELCO #24202270)	94	F (LT1, M30)	1	24202270
10.	6-B25	4.265	VALVE KIT, PRESS CONT SOL (W/SHFT SOL VLV FLUID FLTR) (INCL 49, 50, 377) (AC-DELCO #24216254)	94-95	F (M30)	1	24216254

RPO DEFINITIONS

GU2 - AXLE,REAR,2.73 RATIO
GU5 - AXLE,REAR,3.23 RATIO
LT1 - ENGINE-GAS, 8 CYL, 5.7L(5.7P),MFI,HO
L32 - ENGINE,3.4L,V6,(3.4S),SFI,OHV
L36 - ENGINE GAS, 6 CYL, 3.8K, MFI, V6, HO (ERV6 SERIES)
M30 - TRANSMISSION,AUTOMATIC 4 SPEED,4L60E,ELECTRONIC

cardiagn.com

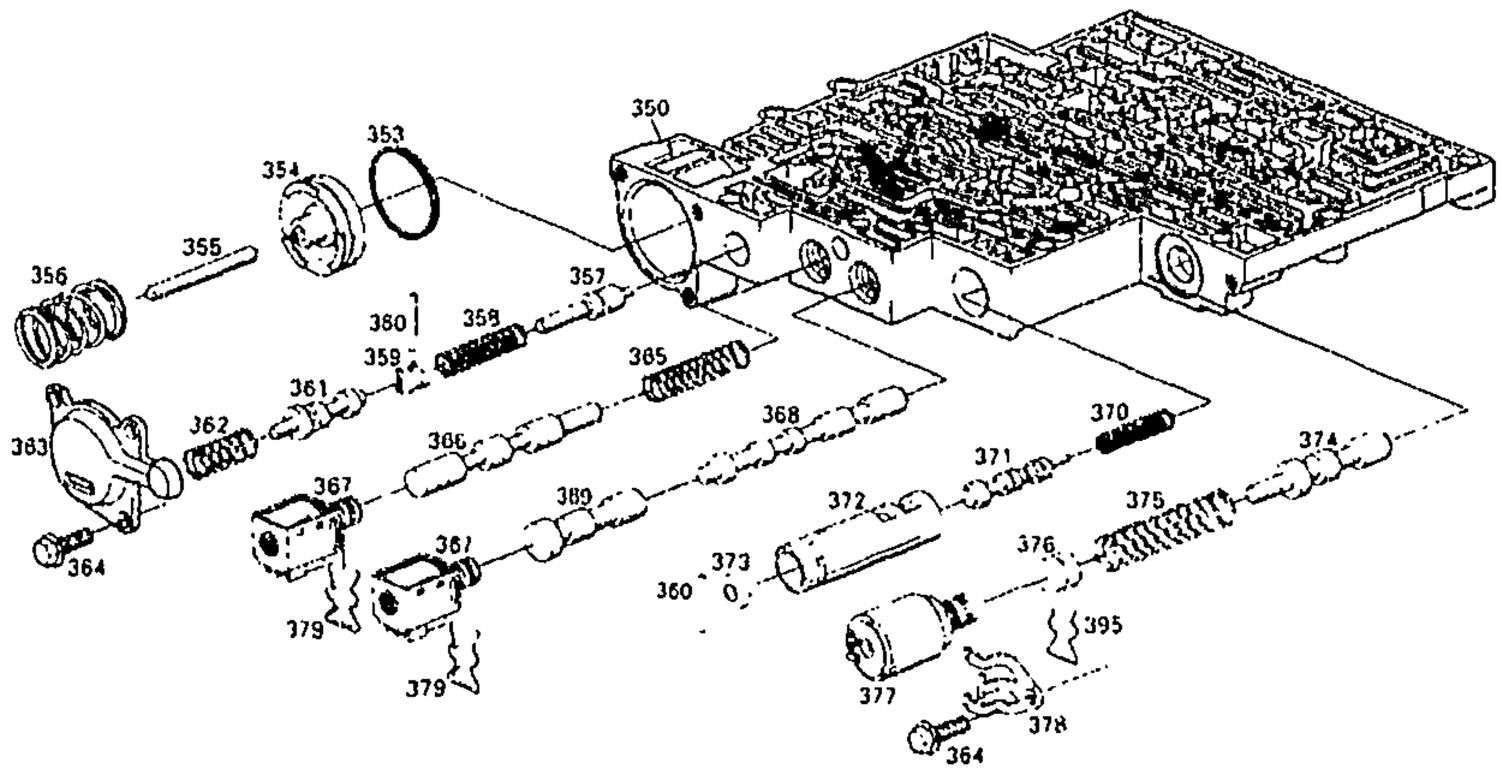

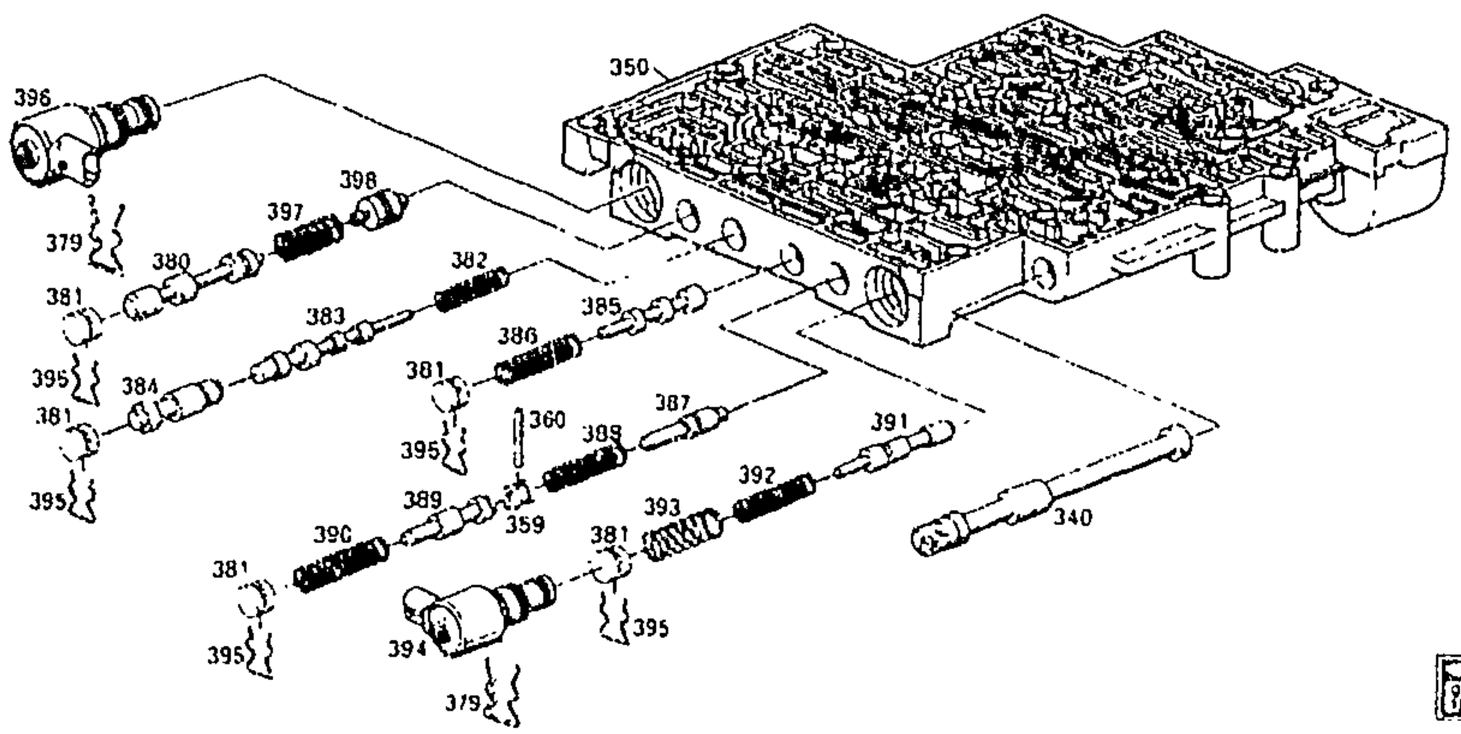

GM04-418F

1994-1995 F AUTOMATIC TRANSMISSION (M30) PART 3 (4L60E) CONTROL VALVE

340.		N.S.	VALVE, MAN (*KIT1)				
350.		N.S.	BODY, C/VLV (*KIT1)				
353.	6-B21	4.229	RING, FWD CLU ACCUM PSTN FLUID SEAL (*KIT1) (AC-DELCO #8680653)	94-95	F (M30)	1	8680653
354.	6-B18	4.228	PISTON, FWD CLU ACCUM (*KIT1) (AC-DELCO #24200126)	94-95	F (M30)	1	24200126
355.		N.S.	PIN, 1-2 ACCUM PSTN (*KIT1)				
		N.S.	PIN, 2-3 ACCUM PSTN (*KIT1)				
356.	6-B22	4.233	SPRING, FWD CLU ACCUM PSTN (*KIT1) (AC-DELCO	94-95	F (L32, M30)	1	24200019

cardiagn.com

	6-B22	4.233	SPRING, FWD CLU ACCUM PSTN (*KIT1) (AC-DELCO #24206765)	94-95	F (LT1, M30)	1	24206765
	6-B22	4.233	SPRING, FWD CLU ACCUM PSTN (*KIT1) (AC-DELCO #24200019)	95	F (L36, M30)	1	24200019
357.		N.S.	VALVE, FWD CLU ABUSE (*KIT1)				
358.		N.S.	SPRING, FWD CLU ABUSE VLV (*KIT1)				
359.		N.S.	PLUG, TCC C/VLV BORE (*KIT1)				
360.	6-B7	4.169	PIN, FWD CLU ABUSE VLV BORE PLUG (*KIT1) (4.265) (AC-DELCO #8680765)	94-95	F (M30)	1	8680765
	6-B25	4.265	PIN, REV ABUSE VLV BORE PLUG (*KIT1) (AC-DELCO #8680765)	94-95	F (M30)	1	8680765
	6-B25	4.265	PIN, 1-2 ACCUM VLV BORE PLUG (*KIT1) (AC-DELCO #8680765)	94-95	F (M30)	1	8630765
361.		N.S.	VALVE, LOW OVERRUN (*KIT1)				
362.		N.S.	SPRING, LOW OVERRUN VLV (*KIT1)				
363.	6-B18	4.228	COVER, FWD CLU ACCUM (W/SLOTS) (*KIT1) (AC-DELCO #24206338)	94-95	F (M30)	1	24206338
364.	6-B24	4.241	BOLT, FWD CLU ACCUM CVR (M6X1X17.7) (*KIT1) (4.265) (AC-DELCO #8680764)	94-95	F (M30)	3	8680764
	6-B25	4.265	BOLT, PRESS CONT SOL VLV CLA (M6X1X17.7) (*KIT1) (AC-DELCO #8680764)	94-95	F (M30)	3	8680764
365.		N.S.	SPRING, 1-2 SHFT VLV (*KIT1)				
366.		N.S.	VALVE, 1-2 SHFT (*KIT1)				
367.	6-B25	4.265	VALVE, 1-2, 3-4 SHFT SOL (CPS) (INCLS SEAL) (*KIT1) (AC-DELCO #10478131)	94-95	F (M30)	1	10478131
	6-A19	4.122	SEAL, TCC SOL VLV (O RING) (SMALL DIA) (OTR) (*KIT1) (AC-DELCO #10471813)				10471813
368.		N.S.	VALVE, 2-3 SHUTTLE (*KIT1)				
369.		N.S.	VALVE, 2-3 SHFT (*KIT1)				
370.		N.S.	SPRING, 1-2 ACCUM VLV (*KIT1)				
371		N.S.	VALVE, 1-2 ACCUM (*KIT1)				
372.		N.S.	SLEEVE, 1-2 ACCUM VLV (*KIT1)				
373.		N.S.	PLUG, TCC C/VLV BORE (*KIT1)				
374.		N.S.	VALVE, ACTR FEED LIM (*KIT1)				
375.		N.S.	SPRING, ACTR FEED LIM VLV (*KIT1)				
376.		N.S.	PLUG, TCC C/VLV BORE (*KIT1)				
377.		N.S.	VALVE, PRESS CONT SOL (*KIT1, KIT2)				
378.	6-B25	4.265	CLAMP, PRESS CONT SOL VLV (*KIT1) (AC-DELCO #8682007)	94-95	F (M30)	1	8682007

cardiagn.com

379.	6-B25	4.265	RETAINER, 1-2, 3-4 SHFT SOL. VLV (*KIT1) (AC-DELCO #8680781)	94-95	F (M30)	1	8680781
380.		N.S.	VALVE, TCC (*KIT1)				
381.		N.S.	PLUG, TCC C/VLV BORE (*KIT1)				
382.		N.S.	SPRING, 4-3 SEQUENCE VLV (*KIT1)				
383.		N.S.	VALVE, 4-3 SEQUENCE (*KIT1)				
384.		N.S.	VALVE, 3-4 RLY (*KIT1)				
385.		N.S.	VALVE, 3-4 SHFT (*KIT1)				
386.		N.S.	SPRING, 3-4 SHIFT VLV (*KIT1)				
387.		N.S.	VALVE, ABUSE (REV) (*KIT1)				
388.		N.S.	SPRING, ABUSE VLV (REV) (*KIT1)				
389.		N.S.	VALVE, 3-2 DNSHFT (*KIT1)				
390.		N.S.	SPRING, 3-2 DNSHFT VLV (*KIT1)				
391.		N.S.	VALVE, 2-3 CONT (*KIT1)				
392.		N.S.	SPRING, 3-2 C/VLV (*KIT1)				
393.		N.S.	SPRING, PLUG BORE (*KIT1)				
394.	6-B25	4.265	VALVE, 3-2 SHFT SOL (*KIT1) (4.122) (AC-DELCO #24212690)	94-95	F (M30)	1	24212690
395.	6-B25	4.265	RETAINER, TRANS CONT VLV BORE PLUG (AC-DELCO #8680781)	94-95	F (M30)	AR	8680781
396.		N.S.	VALVE, TCC PWM SOL (NOT REQ'D) (*KIT1)	94			
	6-B25	4.265	VALVE, TCC PWM SOL (*KIT1) (4.122) (AC-DELCO #24212690)	95	F (M30)	1	24212690
397.		N.S.	SPRING, TCC C/VLV (*KIT1)				
398.		N.S.	VALVE, TCC PWM SOL (*KIT1)				

SERVICE KITS

1.	6-B25	4.265	VALVE KIT, CONT (W/BODY & VLV) (INCL 340-398) (AC-DELCO #24204413)	95	F (L36, M30)	1	24204413
	6-B25	4.265	VALVE, CONT (W/BODY & VLV) (REMAN) (INCL 340-398) (AC-DELCO #24214832)	94	F (LT1, M30)	1	24214832
	6-B25	4.265	VALVE, CONT (W/BODY & VLV) (REMAN) (INCL 340-398) (AC-DELCO #24214837)	94	F (L32, M30)	1	24214837
	6-B25	4.265	VALVE, CONT (W/BODY & VLV) (REMAN) (INCL 340-398) (AC-DELCO #24214844)	95	F (LT1, M30)	1	24214844
	6-B25	4.265	VALVE, CONT (W/BODY & VLV) (REMAN) (INCL 340-398) (AC-DELCO #24214849)	95	F (L32 M30)	1	24214849
2.	6-B25	4.265	VALVE KIT, PRESS CONT SOL (W/SHIFT SOL VLV FLUID FLTR) (INCL 377) (AC-DELCO #24216254)	94-95	F (M30)	1	24216254

RPO DEFINITIONS
LT1 -- ENGINE-GAS, 8 CYL, 5.7L(5 7P),MFI,HO
L32 -- ENGINE,3.4L V6,(3 4S) SFI,OHV

cardiagn.com

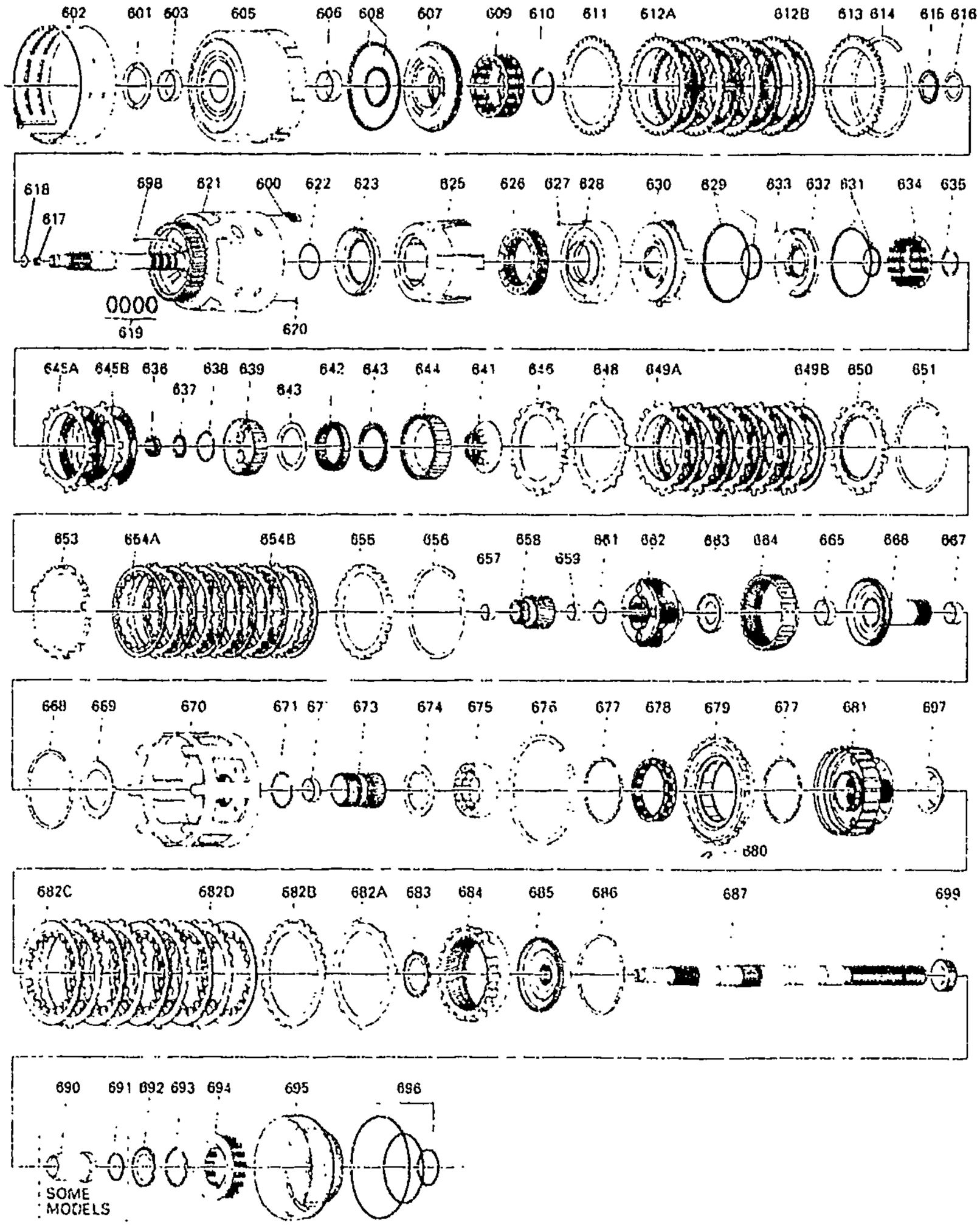

GM04-468F

1995-1996 F AUTOMATIC TRANSMISSION (M30) PART 2 (4L60E) CLUTCH GEARS

600.	6-A24	4.163	SPRING, 3RD & 4TH CLU BOOST (INCLS RET & (2) SPRNGS) (*KIT6) (AC-DELCO #8667424)	95-96 F (M30)	5	8667424

cardiagn.com

601.	6-B10	4.180	WASHER, REV INPUT CLU HSG THR (4.226) (AC-DELCO #08642041)	95-96	F (M30)	1	8642041
602.	6-B24	4.251	BAND, 2-4 (AC-DELCO #24201131)	95-96	F (M30)	1	24201131
603.	6-B9	4.180	BUSHING, REV INPUT CLU HSG FRT (ALSO PART OF 605) (AC-DELCO #8642905)	95-96	F (M30)	1	8642905
605.	6-B7	4.169	HOUSING, REV INPUT CLU (INCL 603, 606) (AC-DELCO #8681295)	95-96	F (M30)	1	8681295
606.	6-B7	4.169	BUSHING, DIR CLU HSG RR (ALSO PART OF 605) (AC-DELCO #8628917)	95-96	F (M30)	1	8628917
607.	6-B5	4.166	PISTON, REV INPUT CLU (.095 HOLE) (AC-DELCO #8667841)	95-96	F (M30)	1	8667841
608.	6-B5	4.166	SEAL KIT, REV INPUT CLU (INCLS SEALS) (*KIT2, KIT3) (AC-DELCO #8657922)	95-96	F (M30)	1	8657922
609.	6-B5	4.164	SPRING, REV INPUT CLU (AC-DELCO #8647284)	95-96	F (M30)	1	8647284
610.	6-B5	4.164	RING, REV INPUT CLU SPR RET (*KIT4) (AC-DELCO #8628059)	95-96	F (M30)	1	8628059
611.	6-A24	4.163	PLATE, REV INPUT CLU (WAVED) (AC-DELCO #8685893)	95	F (L32, M30)	1	8685893
	6-A24	4.163	PLATE, REV INPUT CLU (WAVED) (AC-DELCO #8663074)	95-96	F (LT1, L36, M30)	1	8663074
612.	6-A24	4.163	PLATE, REV INPUT CLU (ILLUSTRATED AS 612A) (153MM DIA) (*KIT8) (AC-DELCO #8673605)	95-96	F (M30)	4	8673605
	6-A24	4.163	PLATE, REV INPUT CLU (ILLUSTRATED AS 612B) (W/ HOLES IN TURB PLATES) (AC-DELCO #24205267)	95-96	F (M30)	4	24205267
613.	6-A24	4.163	PLATE, REV INPUT CLU BKG (7.25-7.41MM) (AC-DELCO #8682863)	95-96	F (M30)	1	8682863
	6-A24	4.163	PLATE, REV INPUT CLU BKG (6.52-6.68MM) (AC-DELCO #8682864)	95-96	F (M30)	1	8682864
	6-A24	4.163	PLATE, REV INPUT CLU BKG (5.79-5.95MM) (AC-DELCO #8682865)	95-96	F (M30)	1	8682865
	6-A24	4.163	PLATE, REV INPUT CLU BKG (7.045-7.211MM) (AC-DELCO #24213046)	95	F (L32, M30)	1	24213046
	6-A24	4.163	PLATE, REV INPUT CLU BKG (6.270-6.436MM) (AC-DELCO #24213047)	95	F (L32, M30)	1	24213047
	6-A24	4.163	PLATE, REV INPUT CLU BKG (AC-DELCO #24213048)	95	F (L32, M30)	1	24213048
614.	6-B5	4.164	RING, REV INPUT CLU BKG PLT RET (YELLOW) (AC-DELCO #8667022)	95-96	F (M30)	1	8667022

cardiagn.com

615.	6-A24	4.162	**BEARING**, REV INPUT CLU HSG THR (STATOR SHF) (TO SEL WA) (AC-DELCO #8642066)	95-96	F (M30)	1	8642066
616.	6-B10	4.189	**WASHER**, REV INPUT CLU HSG THR (1.87--1.97MM) (4.158) (AC-DELCO #8642067)	95-96	F (M30)	1	8642067
	6-B10	4.189	**WASHER**, REV INPUT CLU HSG THR (2.04-2.14MM) (4.158) (AC-DELCO #8642068)	95-96	F (M30)	1	8642068
	6-B10	4.189	**WASHER**, REV INPUT CLU HSG THR (2.21-2.31MM) (4.158) (AC-DELCO #8642069)	95-96	F (M30)	1	8642069
	6-B10	4.189	**WASHER**, REV INPUT CLU HSG THR (2.38-2.48MM) (4.158) (AC-DELCO #8642070)	95-96	F (M30)	1	8642070
	6-B10	4.189	**WASHER**, REV INPUT CLU HSG THR (2.55-2.65MM) (4.158) (AC-DELCO #8642071)	95-96	F (M30)	1	8642071
	6-B10	4.189	**WASHER**. REV INPUT CLU HSG THR (2.72-2.82MM) (4.158) (AC-DELCO #8642072)	95-96	F (M30)	1	8642072
	6-B10	4.189	**WASHER**, REV INPUT CLU HSG THR (2.89-2.99MM) (4.158) (AC- DELCO #8642073)	95-96	F (M30)	1	8642073
	6-B10	4.189	**WASHER**, REV INPUT CLU HSG THR (3.06-3.16MM) (4.158) (AC-DELCO #8642074)	95-96	F (M30)	1	8642074
617.	6-A20	4.123	**VALVE**, TURB SHF BALL CHK (PART OF 621) (AC-DELCO #8685839)	95-96	F (M30)	1	8685839
618.	6-A20	4.123	**SEAL**, TURB SHF (O RING) (*KIT2, KIT3) (AC-DELCO #8630049)	95-96	F (LT1, M30)	1	8630049
	6-A20	4.123	**SEAL**, TURB SHF (O RING) (TO SEL WA) (*KIT2, KIT3) (AC-DELCO #8662686)	95	F (L32, M30)	1	8662686
	6-A20	4.123	**SEAL**, TURB SHF (O RING) (TO SEL WA) (*KIT2, KIT3) (AC-DELCO #8662686)	95-96	F (L36, M30)	1	8662686
619.	6-A20	4.123	**RING**, INPUT SHF FLUID SEAL (TEFLON) (TEFLON) (*KIT2, KIT3) (AC-DELCO #8667035)	95--96	F (M30)	4	8667035
620.	6-A20	4.123	**VALVE**, 3-4 CLU HSG BALL CHK (ALSO PART OF 621) (AC--DELCO #24208262)	95-96	F (M30)	1	24208262
621.	6-A23	4.158	**HOUSING**, 3-4 CLU (W/INPUT SHF) (INCL 617, 620) (AC-DELCO #24200901)	95-96	F (LT1, M30)	1	24200901
	6-A23	4.158	**HOUSING**, 3-4 CLU (W/INPUT SHF) (INCL 617, 620) (AC-DELCO #24200902)	95	F (L32, M30)	1	24200902
	6-A23	4.158	**HOUSING**, 3-4 CLU (W/INPUT SHF) (INCL 617, 620) (AC-DELCO #24200902)	95-96	F (L36, M30)	1	24200902
622.		N.S.	**SEAL**, O-RING INPUT TO FWD HSG (*KIT1, KIT2, KIT3)		.....		

cardiagn.com

623.	6-B5	4.166	PISTON, 3-4 CLU (AC-DELCO #24200290)	95-96	F (M30)	1	24200290
625.	6-B7	4.167	RING, 3-4 CLU APPL (1 BAR) (*KIT7) (AC-DELCO #8685043)	95-96	F (M30)	1	8685043
626.	6-B7	4.167	SPRING, 3-4 CLU (105.12MM O.D.) (AC-DELCO #8685244)	95-96	F (M30)	1	8685244
627.	6-A20	4.123	VALVE, FWD CLU HSG BALL CHK (ALSO PART OF 628) (SINGLE ORIFICE) (TALL & NARROW) (4.226) (AC-DELCO #8628732)	95-96	F (M30)	1	8628732
	6-A20	4.123	VALVE, FWD CLU HSG BALL CHK (ALSO PART OF 628) (SHORT & WIDE) (AC-DELCO #24205181)	96	F (M30)	1	24205181
628.	6-B7	4.169	HOUSING, FWD CLU (INCL 627) (AC-DELCO #8654326) (W/JULIAN DATE 95-092 & PRIOR, FOR 2ND DES SEE 24205298.)	95	F (M30) (1ST DES)	1	8654326
	6-B7	4.169	HOUSING, FWD CLU (INCL 627) (INCLS HOUSINGS & VALVE) (AC-DELCO #24205298) (W/JULIAN DATE 95-093 & AFTER, FOR 1ST DES SEE 08654326.)	95	F (M30) (2ND DES)	1	24205298
	6-B7	4.169	HOUSING, FWD CLU (INCL 627) (INCLS HOUSINGS & VALVE) (AC-DELCO #24205298)	96	F (M30)	1	24205298
629.	6-B5	4.166	SEAL, FWD CLU PSTN OTR (*KIT1, KIT2, KIT3) (AC-DELCO #8686146)	95-96	F (M30)	1	8686146
		N.S.	SEAL, FWD CLU PSTN INR (*KIT1, KIT2, KIT3)				
630.	6-B5	4.166	PISTON, FWD CLU (AC-DELCO #8683513)	95-96	F (M30)	1	8683513
631.		N.S.	SEAL, OVERRUN CLU INR & OTR (*KIT1, KIT2, KIT3)				
632.	6-B5	4.166	PISTON, OVERRUN CLU (INCL 633) (ALUMINUM TYPE W/REMOVABLE SEAL) (AC-DELCO #8642148)	95-96	F (M30)	1	8642148
633.		8.899	BALL, SPECIAL, 3/16 STEEL (ALSO PART OF 632) (AC-DELCO #7002117)	95-96		AR	7002117
634.	6-A24	4.163	SPRING, OVERRUN CLU (AC-DELCO #8677876)	95-96	F (M30)	1	8677876
635.		8.934	RING, EXT SNAP FITS M38 DIA SHT .PL (*KIT4)	95-96		AR	11500592
636.	6-B8	4.176	SEAL, OUTPUT SHF (*KIT1, KIT2, KIT3) (AC-DELCO #8677268)	95-96	F (M30)	1	8677268
637.	6-A23	4.159	BEARING, INPUT SUN GR THR (AC-DELCO #8642162)	95-96	F (M30)	1	8642162
638.	6-B9	4.180	RING, OVERRUN CLU HUB RET (SNAP) (ALSO PART OF 642) (*KIT4) (AC-DELCO #8647083)	95-96	F (M30)	1	8647083

cardiagn.com

639.		N.S.	HUB, OVERRUN CLU (PART OF 642)				
641.		N.S.	RETAINER, FWD CLU SPRAG INR (PART OF 642)				
642.	6-B5	4.164	CLUTCH, FWD RLR (INCL 638-9, 641, 643-4) (HIGH SPD, INCLS INPUT SUN GEAR) (AC-DELCO #24210960)	95	F (M30)	1	24210960
	6-B5	4.164	CLUTCH, FWD RLR (INCL 638-9, 641, 643-4) (REG SPD, INCLS INPUT SUN GEAR) (AC-DELCO #24210961)	96	F (M30)	1	24210961
643.		N.S.	RETAINER, (PART OF 642)				
644.		N.S.	RACE, FWD CLU SPRAG OTR (PART OF 642)				
645.	6-A24	4.163	PLATE, OVERRUN CLU (ILLUSTRATED AS 645A) (1.93-2.13 THK) (GROOVED) (*KIT8) (AC-DELCO #8673253)	95-96	F (M30)	2	8673253
	6-A24	4.163	PLATE, OVERRUN CLU (ILLUSTRATED AS 645B) (2.34MM THK) (FLAT STEEL) (AC-DELCO #8642154)	95-96	F (M30)	2	8642154
646.	6-A24	4.163	PLATE, FWD CLU APPLY (AC-DELCO #8682866)	96	F (M30)	1	8682866
	6-A24	4.163	PLATE, FWD CLU APPLY (USE ON TRANS BUILT W/JULIAN DATE 95-093 TO CURRENT) (AC-DELCO #8682866)	95	F (M30) (2ND DES)	1	8682866
	6-A24	4.163	PLATE, FWD CLU APPLY (USE ON TRANS BUILT W/JULIAN DATE 95-092 & PRIOR) (AC-DELCO #8685049)	95	F (M30) (1ST DES)	1	8685049
648.	6-A24	4.163	PLATE, FWD CLU (WAVED) (AC-DELCO #8647058) (USE ON TRANS BUILT W/JULIAN DATE 95-092 & PRIOR, FOR 2ND DES SEE 24203903.)	95	F (LT1, M30) (1ST DES)	1	8647058
	6-A24	4.163	PLATE, FWD CLU (WAVED) (AC-DELCO #8686010) (USE ON TRANS BUILT W/JULIAN DATE 95-092 & PRIOR, FOR 2ND DES SEE 24203903.)	95	F (L32, M30) (1ST DES)	1	8686010
	6-A24	4.163	PLATE, FWD CLU (WAVED) (AC-DELCO #8686010) (USE ON TRANS BUILT W/JULIAN DATE 95-092 & PRIOR, FOR 2ND DES SEE 24203903.)	95	F (L36, M30) (1ST DES)	1	8686010
	6-A24	4.163	PLATE, FWD CLU (WAVED) (AC-DELCO #24203903) (USE ON TRANS BUILT W/JULIAN DATE 95-093 TO CURRENT, FOR 1ST DES SEE 08686010.)	95	F (L32, M30) (2ND DES)	1	24203903
	6-A24	4.163	PLATE, FWD CLU (WAVED) (AC-DELCO #24203903) (USE ON TRANS BUILT W/JULIAN DATE 95-093 TO CURRENT, FOR 1ST DES SEE 08647058.)	95	F (L36, M30) (2ND DES)	1	24203903

cardiagn.com

	6-A24	4.163	PLATE, FWD CLU (WAVED) (AC-DELCO #8647058)	96	F (LT1, M30)	1	8647058
	6-A24	4.163	PLATE, FWD CLU (WAVED) (AC-DELCO #24203903)	96	F (L36, M30, GU6)	1	24203903
649.	6-A24	4.163	PLATE, FWD CLU (ILLUSTRATED AS 649A) (FIBER) (*KIT3, KIT5, KIT8) (AC-DELCO #8673254) ...	95-96	F (M30)	5	8673254
	6-A24	4.163	PLATE, FWD CLU (ILLUSTRATED AS 649B) (STEEL) (*KIT3, KIT5, KIT8) (AC-DELCO #8654325) ...	95-96	F (M30)	5	8654325
650.	6-A24	4.163	PLATE, FWD CLU BKG (6.92-7.07MM) (ID A) (AC-DELCO #8682867)	95-96	F (M30)	1	8682867
	6-A24	4.163	PLATE, FWD CLU BKG (8.73-9.03MM) (ID B) (AC-DELCO #8682868)	95-96	F (M30)	1	8682868
	6-A24	4.163	PLATE, FWD CLU BKG (4.56-4.71MM) (ID E) (AC-DELCO #8682871)	95-96	F (M30)	1	8682871
	6-A24	4.163	PLATE, FWD CLU BKG (7.55MM-7.85MM) (AC-DELCO #24212467)	95-96	F (M30)	1	24212467
	6-A24	4.163	PLATE, FWD CLU BKG (8.14MM-8.44MM) (AC-DELCO #24212468)	95-96	F (M30)	1	24212468
651.	6-A24	4.163	RING, FWD CLU BKG PLT RET (AC-DELCO #8642170)	95-96	F (M30)	1	8642170
653.	6-A24	4.163	PLATE, 3-4 CLU APPLY (*KIT7) (AC-DELCO #8685044)	95-96	F (M30)	1	8685044
654.	6-A24	4.163	PLATE, 3-4 CLU (FIBER) (*KIT3, KIT7, KIT8) (AC-DELCO #24201132)	95-96	F (M30)	6	24201132
	6-A24	4.163	PLATE, 3-4 CLU (2.71MM (STEEL) (5 LG SPACES EQUAL SPACED BETWEEN CLSTR OF SMALL TEETH) (*KIT3, KIT7) (AC-DELCO #8685045)	95-96	F (M30)	5	8685045
655.	6-A24	4.163	PLATE, 3-4 CLU BKG (ID BY 3 DIMPLES) (*KIT7) (AC-DELCO #8685046)	95-96	F (M30)	1	8685046
	6-A24	4.163	PLATE, 3-4 CLU BKG (3.90MM-4.10MM) (*KIT7) (AC-DELCO #24212459)	95-96	F (M30)	1	24212459
	6-A24	4.163	PLATE, 3-4 CLU BKG (SELECTIVE) (4.79-4.99MM THK) (*KIT7) (AC-DELCO #24211896)	95-96	F (M30)	1	24211896
656.	6-A24	4.163	RING, 3-4 CLU BKG PLT RET (AC-DELCO #8663636)	95-96	F (M30)	1	8663636
657.	6-A23	4.159	BUSHING, INPUT SUN GR FRT (FRT) (ALSO PART OF 658) (FRT & RR) (AC-DELCO #8642181) ..	95-96	F (M30)	2	8642181
658.	6-A23	4.159	GEAR, INPUT SUN (INCL 657, 659) (AC-DELCO #24213007) ..	95-96	F (M30)	1	24213007
659.	6-A23	4.159	BUSHING, INPUT SUN GR FRT (REAR) (ALSO PART OF 658) (FRT & RR) (AC-DELCO #8642181)	95-96	F (M30)	2	8642181

cardiagn.com

661.	6-B8	4.176	**RING**, OUTPUT SHF RET (TO INPUT CARR) (*KIT2, KIT3, KIT4) (AC-DELCO #8654141)	95-96	F (M30)	1	8654141
662.	6-B8	4.175	**CARRIER**, INPUT (COMPL) (AC-DELCO #24212177)	95-96	F (M30)	1	24212177
663.	6-A23	4.159	**BEARING**, INT REACTION GR SUPT THR (AC-DELCO #8642191)	95-96	F (M30)	1	8642191
664.	6-A23	4.158	**GEAR**, INPUT INTL (AC-DELCO #8663639)	95-96	F (M30)	1	8663639
665.	6-B8	4.176	**BUSHING**, REACTION CARR SHF FRT (ALSO PART OF 666) (AC-DELCO #8642908)	95-96	F (M30)	1	8642908
666.	6-B8	4.175	**SHAFT**, REACTION CARR (INCL 665, 667) (AC-DELCO #8681518)	95-96	F (M30)	1	8681518
667.	6-B8	4.176	**BUSHING**, REACT'ON CARR SHF RR (ALSO PART OF 666) (AC-DELCO #8642907)	95-96	F (M30)	1	8642907
668.	6-B8	4.176	**RING**, REACTION CARR SHF RET (TO INT GR) (AC-DELCO #8642201)	95-96	F (M30)	1	8642201
669.	6-B8	4.176	**WASHER**, REACTION CARR SHF THR (TO SHELL) (08642202 TO BE USED ONLY WITH 08683439) (AC-DELCO #8642202)	95-96	F (M30)	1	8642202
670.	6-B8	4.175	**SHELL**, REACTION SUN GR (AC-DELCO #8683439)	95-96	F (M30)	1	8683439
671.	6-A23	4.159	**RING**, REACTION SUN GR RET (AC-DELCO #8681553)	95-96	F (M30)	1	8681553
672.	6-B8	4.176	**BUSHING**, REACTION SUN GR (ALSO PART OF 673) (AC-DELCO #8642909)	95-96	F (M30)	1	8642909
673.	6-A23	4.159	**GEAR**, REACTION SUN (INCL 672) (INCLS BUSH & GEAR) (INDIVIDUAL COMPONENTS NOT SOLD SEPARATELY) (AC-DELCO #8642204)	95-96	F (M30)	1	8642204
674.	6-A23	4.159	**WASHER**, REACTION SUN GR SHELL THR (4.176) (AC-DELCO #8642331)	95-96	F (M30)	1	8642331
675.	6-B9	4.180	**RACE**, LOW CLU RLR INR (PART OF 679) (*KIT6) (AC-DELCO #8673300)	95-96	F (M30)	1	8673300
676.	6-B9	4.180	**RING**, LOW & REV CLU SUPT RET (AC-DELCO #24200278) ..	95-96	F (M30)	1	24200278
677.	6-B9	4.180	**RING**, LOW CLU RLR RET (OVERRUN) (PART OF 679) (*KIT6) (AC-DELCO #6261051) .	95-96	F (M30)	2	6261051
678.	6-B9	4.180	**ROLLER**, LOW CLU (PART OF 679) (*KIT6) (AC-DELCO #7471008)	95-96	F (M30)	1	7471008
679.	6-B5	4.166	**SUPPORT**, LOW & REV CLU (INCL 675, 677, 678) (*KIT6) (4.180) (AC-DELCO #8681727) .	95-96	F (M30)	1	8681727
680.	6-B9	4.180	**SPRING**, LOW & REV CLU SUPT (RET) (AC-DELCO #6261415) ..	95-96	F (M30)	1	6261415

cardiagn.com

681.	6-B8	4.175	**CARRIER**, REACTION (W/DEFLECTOR) (HI-SPEED) (INCL 697) (AC-DELCO #8654200)	95-96	F (M30)	1	8654200
682.	6-A24	4.163	**PLATE**, LOW & REV CLU (WAVED) (ILLUSTRATED AS 682A) (*KIT3, KIT6) (AC-DELCO #8676362)	95-96	F (M30)	1	8676362
	6-A24	4.163	**PLATE**, LOW & REV CLU (ILLUSTRATED AS 682B) (1.314MM) (SELECTIVE) (*KIT3, KIT6) (AC-DELCO #8680440) ...	95-96	F (M30)	1	8680440
	6-A24	4.163	**PLATE**, LOW & REV CLU (ILLUSTRATED AS 682B) (1.829MM) (HAS HOLES IN TURB PLATES) (STEEL) (*KIT3, KIT6) (AC-DELCO #24205268)	95-96	F (M30)	5	24205268
	6-A24	4.163	**PLATE**, LOW & REV CLU (ILLUSTRATED AS 682B) (2.344MM) (HAS HOLES IN TURB PLATES) (*KIT3, KIT6) (AC-DELCO #24205270)	95-96	F (M30)	1	24205270
	6-A24	4.163	**PLATE**, LOW & REV CLU (FLAT FACED) (ILLUSTRATED AS 682C) (NON-SEGMENTED COMPLETE SET OF 5) (*KIT3, KIT8) (AC-DELCO #8684089)	95-96	F (M30)	5	8684089
	6-A24	4.163	**PLATE**, LOW & REV CLU (ILLUSTRATED AS 682D) (1.829MM) (HAS HOLES IN TURB PLATES) (STEEL) (*KIT3, KIT6) (AC-DELCO #24205268)	95-96	F (M30)	AR	24205268
683.	6-A23	4.159	**BEARING**, REACTION CARR THR (4.176) (AC-DELCO #8642215)	95-96	F (M30)	1	8642215
	6-A23	4.159	**BEARING**, DIFF CARR SUN GR THR (AC-DELCO #8646254) ...	95-96	F (M30)	1	8646254
684.	6-A23	4.158	**GEAR**, REACTION INTL (AC-DELCO #8667055)	95-96	F (M30)	1	8667055
685.	6-B8	4.175	**SUPPORT**, REACTION INTL GR (AC-DELCO #8681491)	95-96	F (M30)	1	8681491
686.	6-B8	4.176	**RING**, INT REACTION GR SUPT RET (AC-DELCO #8642220) ...	95-96	F (M30)	1	8642220
687.	6-B8	4.175	**SHAFT**, OUTPUT (AC-DELCO #8683819)	95	F (M30)	1	8683819
	6-B8	4.175	**SHAFT**, OUTPUT (AC-DELCO #8683817)	96	F (M30)	1	8683817
690.		N.S.	**SLEEVE**, OUTPUT SHF (NOT REQD)		.....		
691.		N.S.	**SEAL**, OUTPUT SHF (NOT REQ'D) (*KIT2, KIT3)		.....		
692.	6-A23	4.159	**BEARING**, REACTION CARR THR (AC-DELCO #8642191) ...	95-96	F (M30)	1	8642191
693.	6-B5	4.164	**RING**, LOW & REV CLU SPR RET RET (*KIT4, KIT6) (4.159) (AC-DELCO #8647337)	95-96	F (M30)	1	8647337
694.	6-B5	4.164	**SPRING**, LOW & REV CLU (AC-DELCO #8642227)	95-96	F (M30)	1	8642227

cardiagn.com

695.	6-B5	4.166	PISTON, LOW & REV CLU (*KIT6) (AC-DELCO #8685549) .	95-96	F (M30)	1	8685549
696.	6-B10	4.109	SEAL KIT, LOW & REV CLU (INCLS INR, OTR & INTER SEALS) (*KIT2, KIT3, KIT6) (4.166) (AC-DELCO #8648987) .	95-96	F (M30)	1	8648987
697.		N.S.	DEFLECTOR, OIL (PART OF 681)		.....		
698.	6-B13	4.224	ORIFICE, LUB FLUID (4.3MM DIA) (AC-DELCO #8663707) ...	95-96	F (M30)	1	8663707
699.	6-C11	4.343	WHEEL, VEH SPD SEN RELUCTOR (AC-DELCO #24202711)	95-96	F (M30)	1	24202711

SERVICE KITS

1.	6-B5	4.166	SEAL KIT, 3-4 CLU PSTN (FOA) (INCL 622, 624, 629, 631, 636) (AC-DELCO #8642919)	95-96	F (M30)	1	8642919
2.	6-A12	4.005	GASKET KIT, A/TRNS SERV (INCL 608, 618-19, 622, 624, 629, 631, 636, 661, 691, 696) (W/O PLATES OR PISTONS) (AC-DELCO #24201803)	95-96	F (M30)	1	24201803
3.		N.S.	TRANSMISSION KIT, AUTO (SERV OVERHAUL W/PLT, GSKT, SEAL) (USE 24201803 GASKET KIT T/W 24201808 PLATE KIT T/W 24204496 PISTON KIT.)	95-96	.....		
4.	6-A12	4.005	RING KIT, RET (INCL 610, 635, 638, 661, 693) (AC-DELCO #8642910)	95-96	F (M30)	1	8642910
5.	6-A24	4.163	PLATE KIT, FWD CLU (INCL 649, 702) (INCLS INST SHEET & PLATES) (AC-DELCO #8647991)	95-96	F (M30)	1	8647991
6.	6-A24	4.163	PLATE KIT, LOW & REV CLU (W/SUPT) (W/PSTN) (INCL 675, 677-9, 682, 693, 695-6) (STEEL PLATES) (AC-DELCO #8687996)	95-96	F (M30)	1	8687996
7.	6-A24	4.163	PLATE KIT, 3-4 CLU (INCL 600, 625, 653, 654, 655B) (AC-DELCO #24209032)	95-96	F (LT1, M30)	1	24209032
	6-A24	4.163	PLATE KIT, 3-4 CLU (INCL 600, 625, 653, 654, 655B) (AC-DELCO #24209032)	95	F (L32, M30)	1	24209032
	6-A24	4.163	PLATE KIT, 3-4 CLU (INCL 600, 625, 653, 654, 655B) (AC-DELCO #24209032)	96	F (M30)	1	24209032
8.	6-A24	4.163	PLATE KIT, CLU (INCL 612A, 645A, 649, 654A, 682C) (HAS FIBER PLTS) (AC-DELCO #24209031)	95-96	F (M30)	1	24209031

RPO DEFINITIONS
GU6 - AXLE,REAR,3.42 RATIO
LT1 - ENGINE-GAS, 8 CYL, 5.7L(5.7P),MFI,HO
L32 - ENGINE,3.4L,V6,(3.4S),SFI,OHV
L36 - ENGINE GAS, 6 CYL, 3.8K, MFI, V6, HO (ERV6 SERIES)

cardiagn.com

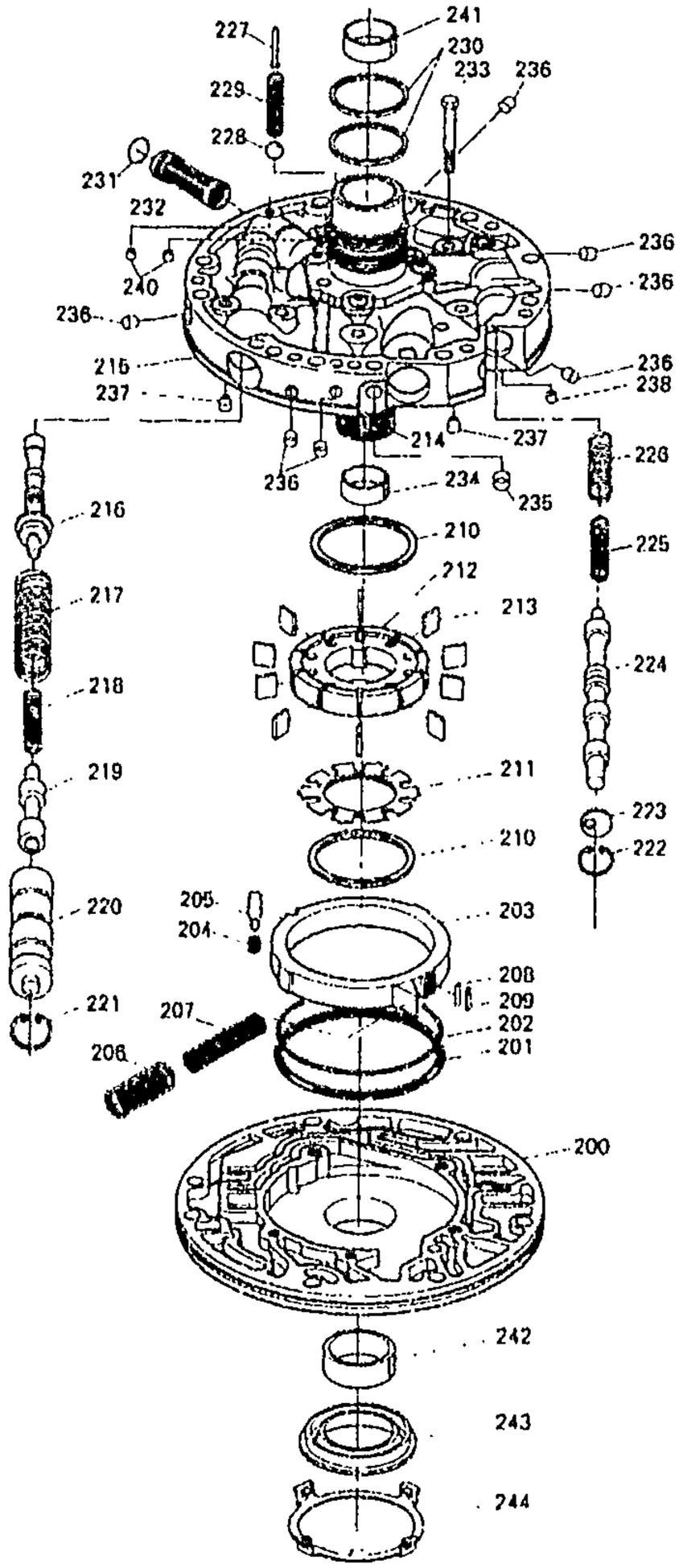

GM04-470F

1996-2002 F AUTOMATIC TRANSMISSION (M30) PART 4 (4L60E) OIL PUMP

200.	6-B13	4.224	BODY KIT, A/TRNS FLUID PUMP (INCL 201 THRU 213, 242 THRU 244) (AC-DELCO #24204797) ..	95-96 F (M30)	1	24204797
	6-B13	4.224	BODY KIT, A/TRNS FLUID PUMP (INCL 201 THRU 213, 242 THRU 244) (13 VANE) (AC-DELCO #24208606)	97-02 F (M30)	1	24208606

cardiagn.com

201.		N.S.	RING, A/TRNS FLUID PUMP SLIDE FLUID SEAL (ALSO PART OF 200, 212) (*KIT1, KIT2, KIT3) .				
202.		N.S.	SEAL, A/TRNS O/PMP SLIDE (O RING) (PART OF 200, 212) (*KIT1, KIT2, KIT3)				
203.	6-B13	4.224	SLIDE, A/TRNS FLUID PUMP (ALSO PART OF 200) (17.987 MM) (AC-DELCO #8634084) ...	95-96	F (M30)	1	8634084
	6-B13	4.224	SLIDE, A/TRNS FLUID PUMP (ALSO PART OF 200) (18.007 MM) (AC-DELCO #8634085) ...	95-96	F (M30)	1	8634085
	6-B13	4.224	SLIDE, A/TRNS FLUID PUMP (ALSO PART OF 200) (17.948MM) (AC-DELCO #24208304)	95-96	F (M30)	1	24208304
	6-B13	4.224	SLIDE, A/TRNS FLUID PUMP (ALSO PART OF 200) (17.961 MM) (AC-DELCO #24208305) ..	95-96	F (M30)	1	24208305
	6-B13	4.224	SLIDE, A/TRNS FLUID PUMP (ALSO PART OF 200) (AC-DELCO #24208306)	95-96	F (M30)	1	24208306
	6-B13	4.224	SLIDE, A/TRNS FLUID PUMP (ALSO PART OF 200) (17.948 MM) (AC-DELCO #24205405) ..	96-97	F (M30)	1	24205405
	6-B13	4.224	SLIDE, A/TRNS FLUID PUMP (ALSO PART OF 200) (17.961 MM) (AC-DELCO #24205406) ..	96-97	F (M30)	1	24205406
	6-B13	4.224	SLIDE, A/TRNS FLUID PUMP (ALSO PART OF 200) (17.974 MM) (AC-DELCO #24205407) ..	96-97	F (M30)	1	24205407
	6-B13	4.224	SLIDE, A/TRNS FLUID PUMP (ALSO PART OF 200) (17.987 MM) (AC-DELCO #24205408) ..	96-97	F (M30)	1	24205408
	6-B13	4.224	SLIDE, A/TRNS FLUID PUMP (ALSO PART OF 200) (18.000 MM) (AC-DELCO #24205409) ..	96-97	F (M30)	1	24205409
	6-B13	4.224	SLIDE, A/TRNS FLUID PUMP (ALSO PART OF 200) (17.948) (AC-DELCO #24212478)	98-02	F (M30)	1	24212478
	6-B13	4.224	SLIDE, A/TRNS FLUID PUMP (ALSO PART OF 200) (17.961MM) (AC-DELCO #24212479)	98-02	F (M30)	1	24212479
	6-B13	4.224	SLIDE, A/TRNS FLUID PUMP (ALSO PART OF 200) (17.974MM) (AC-DELCO #24212480)	98-02	F (M30)	1	24212480
	6-B13	4.224	SLIDE, A/TRNS FLUID PUMP (ALSO PART OF 200) (17.987MM) (AC-DELCO #24212481)	98-02	F (M30)	1	24212481
	6-B13	4.224	SLIDE, A/TRNS FLUID PUMP (ALSO PART OF 200) (18.00MM) (AC-DELCO #24212482)	98-02	F (M30)	1	24212482
204.	6-B17	4.226	SPRING, A/TRNS FLUID PUMP SLIDE PIV PIN (ALSO PART OF 200) (AC-DELCO #8634098) ...	95-02	F (M30)	1	8634098
205.	6-B17	4.226	PIN, A/TRNS FLUID PUMP SLIDE PIV (ALSO PART OF 200) (AC-DELCO #8634097)	95-02	F (M30)	1	8634097

cardiagn.com

206.	6-B17	4.226	SPRING, A/TRNS FLUID PUMP SLIDE OTR (ALSO PART OF 200) (AC-DELCO #8639563)	95-02	F (M30)	1	8639563
207.	6-B17	4.226	SPRING, A/TRNS FLUID PUMP SLIDE INR (ALSO PART OF 200) (AC-DELCO #8639562)	95-02	F (M30)	1	8639562
208.		N.S.	SUPPORT, A/TRNS FLUID PUMP SLIDE SEAL (PART OF 200, 212) (*KIT1, KIT2, KIT3)		.....		
209.		N.S.	SEAL, A/TRNS FLUID PUMP SLIDE (PART OF 200, 212) (*KIT1, KIT2, KIT3)		.....		
210.	6-B17	4.226	RING, A/TRNS FLUID PUMP VANE (ALSO PART OF 200) (AC-DELCO #24201144)	95-02	F (M30)	2	24201144
211.	6-B17	4.226	GUIDE, A/TRNS FLUID PUMP ROT (ALSO PART OF 200, 212) (10 VANE) (ALSO PART OF ROTOR KITS) (AC-DELCO #12337830)	95-96	F (M30)	1	12337830
	6-B17	4.226	GUIDE, A/TRNS FLUID PUMP ROT (ALSO PART OF 200, 212) (13 VANE) (AC-DELCO #24205410)	97-02	F (M30)	1	24205410
212.	6-B12	4.210	ROTOR, A/TRNS FLUID PUMP (ALSO PART OF 200) (INCL 201-2, 208-9, 211, 213) (17.955MM) (W/GDE, VANES & SEALS) (4.224) (AC-DELCO #8649951)	95-02	F (M30)	1	8649951
	6-B12	4.210	ROTOR, A/TRNS FLUID PUMP (ALSO PART OF 200) (INCL 201-2, 208-9, 211, 213) (17.968MM) (W/GDE, VANES & SEALS) (4.224) (AC-DELCO #8649952)	95-02	F (M30)	1	8649952
	6-B12	4.210	ROTOR, A/TRNS FLUID PUMP (ALSO PART OF 200) (INCL 201-2, 208-9, 211, 213) (17.981MM) (W/GDE, VANES & SEALS) (4.224) (AC-DELCO #8649953)	95-02	F (M30)	1	8649953
	6-B12	4.210	ROTOR, A/TRNS FLUID PUMP (ALSO PART OF 200) (INCL 201-2, 208-9, 211, 213) (17.994MM) (W/GDE, VANES & SEALS) (4.224) (AC-DELCO #8649954)	95-02	F (M30)	1	8649954
	6-B12	4.210	ROTOR, A/TRNS FLUID PUMP (ALSO PART OF 200) (INCL 201-2, 208-9, 211, 213) (18.007MM) (W/GDE, VANES & SEALS) (4.224) (AC-DELCO #8649955)	95-02	F (M30)	1	8649955
213.	6-B17	4.226	VANE, A/TRNS FLUID PUMP (ALSO PART OF 200, 212) (AC-DELCO #8631280)	95-02	F (M30)	10	8631280
214.		N.S.	SHAFT, STATOR (PART OF 215) .		.....		

cardiagn.com

215.	6-B13	4.224	COVER, A/TRNS FLUID PUMP (REMAN) (INCL 214, 216 THRU 227, 231, 232, 234 THRU 240.) (AC-DELCO #24213018)	95	F (L32, M30)	1	24213018
	6-B13	4.224	COVER, A/TRNS FLUID PUMP (REMAN) (INCL 214, 216 THRU 227, 231, 232, 234 THRU 240.) (AC-DELCO #24213018)	95-96	F (L36, M30)	1	24213018
	6-B13	4.224	COVER, A/TRNS FLUID PUMP (REMAN) (INCL 214, 216 THRU 227, 231, 232, 234 THRU 240.) (AC-DELCO #24213019)	95-96	F (LT1, M30)	1	24213019
	6-B13	4.224	COVER, A/TRNS FLUID PUMP (REMAN) (INCL 214, 216 THRU 227, 231, 232, 234 THRU 240.) (AC-DELCO #24213020)	97	F (L36, M30)	1	24213020
	6-B13	4.224	COVER, A/TRNS FLUID PUMP (REMAN) (INCL 214, 216 THRU 227, 231, 232, 234 THRU 240.) (13-VANE) (AC-DELCO #24213024)	97	F (LT1, M30)	1	24213024
	6-B13	4.224	COVER, A/TRNS FLUID PUMP (REMAN) (INCL 214, 216 THRU 227, 231, 232, 234 THRU 240.) (AC-DELCO #24213020) (W/JULIAN DATE 98-018 & PRIOR, FOR 2ND DSGN SEE 24213267)	98	F (L36, M30) (1ST DES)	1	24213020
	6-B13	4.224	COVER, A/TRNS FLUID PUMP (REMAN) (INCL 214, 216 THRU 227, 231, 232, 234 THRU 240.) (AC-DELCO #24214011) (W/JULIAN DATE 98-018 & PRIOR, FOR 2ND DSGN SEE 24213269)	98	F (LS1, M30) (1ST DES)	1	24214011
	6-B13	4.224	COVER KIT, A/TRNS FLUID PUMP (INCL 214, 216 THRU 227, 231, 232, 234 THRU 240.) (INCLS COVER ASM & RING) (AC-DELCO #24213267) (W/JULIAN DATE 98-019 & AFTER, FOR 1ST DSGN SEE 24213020)	98	F (L36, M30) (2ND DES)	1	24213267
	6-B13	4.224	COVER KIT, A/TRNS FLUID PUMP (INCL 214, 216 THRU 227, 231, 232, 234 THRU 240.) (INCLS COVER ASM & RING) (AC-DELCO #24213267)	99-02	F (L36, M30)	1	24213267
	6-B13	4.224	COVER KIT, A/TRNS FLUID PUMP (INCL 214, 216 THRU 227, 231, 232, 234 THRU 240.) (AC-DELCO #24213269)	99-02	F (LS1, M30)	1	24213269
	6-B13	4.224	COVER KIT, A/TRNS FLUID PUMP (W/JULIAN DATE 98-019 & AFTER FOR 1ST DSGN SEE 24214011) (INCL 214, 216 THRU 227, 231, 232, 234 THRU 240.) (AC-DELCO #24213269)	98	F (LS1, M30) (2ND DES)	1	24213269

cardiagn.com

216.	6-B25	4.262	**VALVE**, PRESS REG (PART OF 215) (4.216) (AC-DELCO #8684049)	95-02	F (M30)	1	8684049
217.	6-B25	4.262	**SPRING**, PRESS REG VLV OTR (PART OF 215) (4.216) (AC-DELCO #8680682)	95-02	F (M30)	1	8680682
218.	6-B25	4.262	**SPRING**, PRESS REG VLV INR (PART OF 215) (AC-DELCO #8680684)	95-02	F (M30)	1	8680684
219.		N.S.	**VALVE**, REV BOOST (PART OF 215) (*KIT4)				
220.		N.S.	**SLEEVE**, REV BOOST VLV (PART OF 215) (*KIT4)				
221.	6-B25	4.265	**RING**, T/V BOOST VLV BUSH RET (PART OF 215) (*KIT5) (4.216) (AC-DELCO #11503348)	95-02	F (M30)	1	11503348
222.		8.934	**RING**, TYPE TA INT RET .000X.68X 037PL (PART OF 215) (*KIT5) (AC-DELCO #274267)	95-02		AR	274267
223.	6-B25	4.262	**STOP**, TCC VLV (PART OF 215) (4.216) (AC-DELCO #8634705)	95-02	F (M30)	1	8634705
224.	6-B25	4.265	**VALVE**, TCC (PART OF 215) (AC-DELCO #24205509)	95-02	F (M30)	1	24205509
225.	6-B25	4.265	**SPRING**, TCC VLV INR (PART OF 215) (4.216) (AC-DELCO #24201610)	05-02	F (M30)	1	24201610
226.	6-B25	4.265	**SPRING**, TCC VLV OTR (PART OF 215) (4.216) (AC-DELCO #24201611)	95-02	F (M30)	1	24201611
227.	6-B25	4.262	**RIVET**, PRESS RLF BALL VLV SPR (PART OF 215) (4.216) (AC-DELCO #8642619)	95-02	F (M30)	1	8642619
228.		8.899	**BALL**, 3/8 STEEL (CLU PRESS RLF VLV) (AC-DELCO #7826284)	95-02		AR	7826284
229.	6-B25	4.265	**SPRING**, PRESS RLF BALL VLV (AC-DELCO #8634106)	95-02	F (M30)	1	8634106
230.	6-B17	4.226	**RING**, REV INPUT CLU HSG FLUID SEAL (*KIT1, KIT2) (AC-DELCO #8681292)	95-02	F (M30)	2	8681292
231.	6-B13	4.224	**SEAL**, A/TRNS FLUID PUMP CVR SCRN (ALSO PART OF 215, 232) (AC-DELCO #8642581)	95-02	F (M30)	1	8642581
232.	6-B13	4.224	**SCREEN**, A/TRNS FLUID PUMP CVR (INCL 231, PART OF 215) (AC-DELCO #8642912)	95-02	F (M30)	1	8642912
233.		8.900	**BOLT**, HEX, 8X1.25X40, 33.2 THD, GM 500M, 10.9, PC, MACH (AC-DELCO #11500921)	95-02		AR	11500921
234.	6-B17	4.226	**BUSHING** INPUT SHF FRT (PART OF 215) (AC-DELCO #8647954)	95-02	F (M30)	1	8647954
235.		N.S.	**PLUG**, A/TRNS FLUID PUMP CVR (REQ'D ON TRANS W/O AUX VLV BODY)				
236.	6-B13	4.224	**PLUG**, A/TRNS FLUID PUMP CVR (PART OF 215) (6.80MM DIA) (AC-DELCO #8623886)	95-02	F (M30)	8	8623886

cardiagn.com

237.	6-A20	4.123	**VALVE**, FWD CLU HSG BALL CHK (PART OF 215) (SINGLE ORIFICE) (TALL & NARROW) (4.226) (AC-DELCO #8628732) .	95-02	F (M30)	1	8628732
238.	6-B13	4.224	**ORIFICE**, TCC SIG (PART OF 215) (4.85MM DIA) (AC-DELCO #8634284)	95-02	F (M30)	1	8634284
240.	6-B13	4.224	**ORIFICE**, A/TRNS FLUID PUMP AIR BL (PART OF 215) (AC-DELCO #24203787)	95-02	F (M30)	1	24203787
241.	6-B17	4.226	**BUSHING**, INPUT SHF RR (AC-DELCO #8642904)	95-02	F (M30)	1	8642904
242.	6-A17	4.115	**BUSHING**, T/CV (ALSO PART OF 200) (AC-DELCO #24206030) ..	95-02	F (M30)	1	24206030
243.	6-B17	4.226	**SEAL**, T/CV FLUID (ALSO PART OF 200) (AC-DELCO #24202535)	95-02	F (M30)	1	24202535
244	6-B17	4.226	**RETAINER**, T/CV FLUID SEAL (ALSO PART OF 200) (*KIT1, KIT2) (AC-DELCO #8654491) ...	95-02	F (M30)	1	8654491

SERVICE KITS

1.	6-A12	4.005	**GASKET KIT**, A/TRNS SERV (INCL 201-2, 208-9, 230, 244) (W/O PLATES OR PISTONS) (AC-DELCO #24201803)	95-01	F (M30)	1	24201803
	6-A12	4.005	**GASKET KIT**, A/TRNS SERV (INCL 201-2, 208-9, 230, 244) (AC-DELCO #24221347)	02	F (M30)	1	24221347
2.		N.S.	**TRANSMISSION KIT**, AUTO (SERV OVERHAUL W/PLT, GSKT, SEAL) (USE 24201803 GASKET KIT T/W 24209562 PLATE KIT T/W 24204496 PISTON KIT.)		.....		
3.	6-B17	4.226	**SEAL KIT**, A/TRNS FLUID PUMP SLIDE (INCL 201-2, 208-9) (INCLS RING, SEALS&SUPT) (AC-DELCO #8634906)	95-02	F (M30)	1	8634906
4.	6-B25	4.265	**VALVE KIT**, REV BOOST (INCL 219, 220) (INCLS BUSHING & VALVE) (AC-DELCO #8685949) .	95	F (L32, M30)	1	8685949
	6-B25	4.265	**VALVE KIT**, REV BOOST (INCL 219, 220) (AC-DELCO #24200372)	95-97	F (LT1, M30)	1	24200372
	6-B25	4.265	**VALVE KIT**, REV BOOST (INCL 219, 220) (INCLS BUSHING & VALVE) (AC-DELCO #8685949) .	95-02	F (M30)	1	8685949
	6-B25	4.265	**VALVE KIT**, REV BOOST (INCL 219, 220) (AC-DELCO #24200372)	98	F (LS1, M30)	1	24200372
5.	6-A12	4.005	**RING KIT**, RET (INCL 221, 222) (AC-DELCO #8642910)	95-02	F (M30)	1	8642910

RPO DEFINITIONS
LS1 - ENGINE GAS, 8 CYL, 5.7L, SFI, ALUMINUM ENGINE
LT1 - ENGINE-GAS, 8 CYL, 5.7L(5.7P),MFI,HO
L32 - ENGINE,3.4L,V6,(3.4S),SFI,OHV
L36 - ENGINE GAS, 6 CYL, 3.8K, MFI, V6, HO (FBV6 SERIES)

cardiagn.com

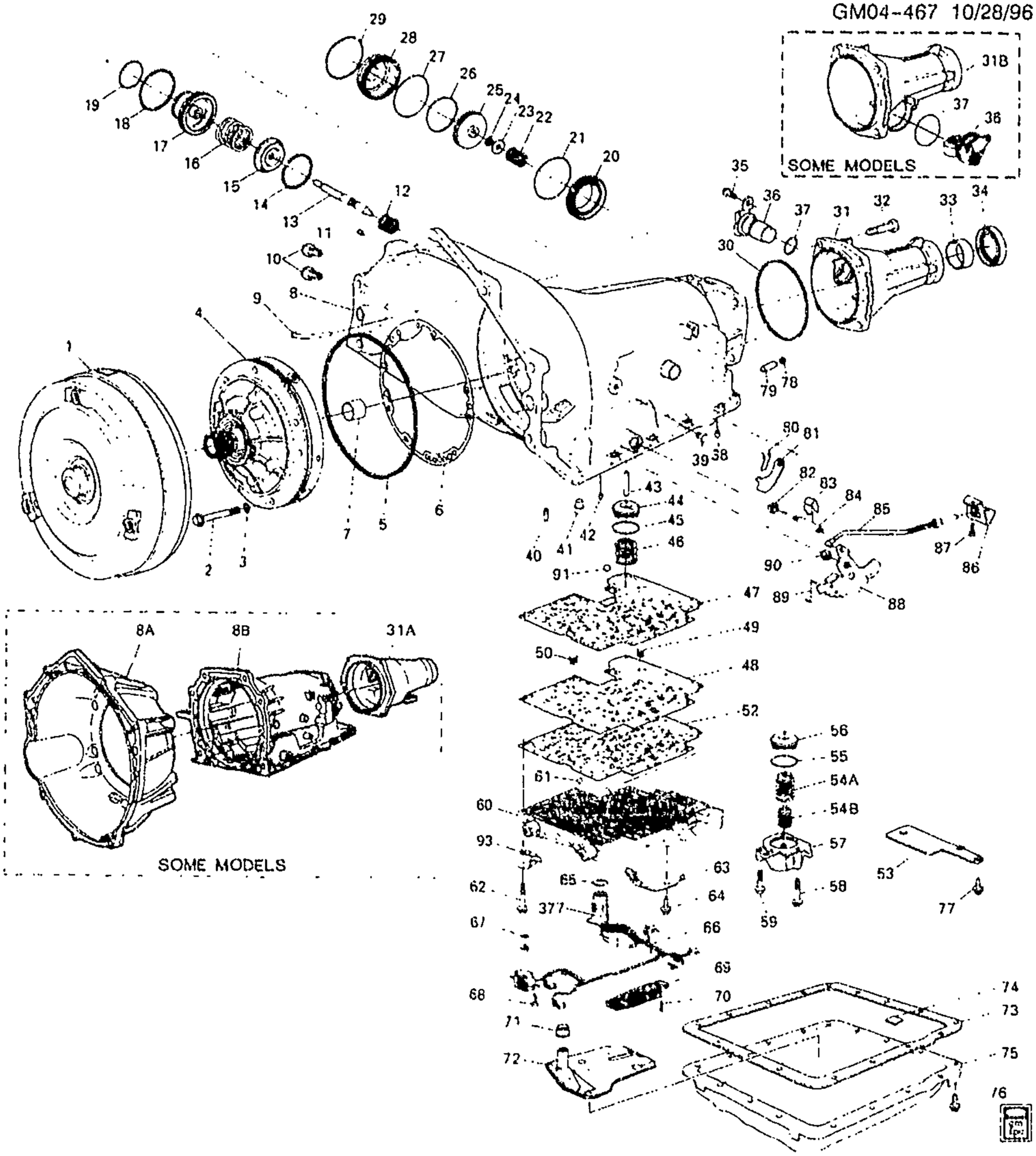

GM04-467F

1996 F AUTOMATIC TRANSMISSION (M30) PART 1 (4L60E) CASE & RELATED PARTS/PARK LOCK LINKAGE

1.	6-A17	4.115	CONVERTER, TORQ (REMAN) (CODE 6FBD- 7FBD)	96 F (L36, M30, GU4)	1 24202522
	6-A17	4.115	CONVERTER, TORQ (REMAN) (CODE HLHD)	96 F (L36, M30, GU6)	1 24203426

cardiagn.com

	6-A17	4.115	**CONVERTER**, TORQ (REMAN) (CODE DHHG)	96	F (LT1, M30)	1	24204668
2.	6-B17	4.226	**BOLT**, A/TRNS FLUID PUMP (M8X1.25X60) (INCLS SEAL) (*KIT1, KIT2) (AC-DELCO #24210819)	96	F (M30)	7	24210819
3.	6-B17	4.226	**SEAL**, A/TRNS FLUID PUMP BOLT (AC-DELCO #12337996)	96	F (M30)	7	12337996
4.		N.S.	**PUMP**, A/TRNS OIL (SEE PUMP ILLUSTRATION)				
5.	6-B17	4.226	**SEAL**, A/TRNS FLUID PUMP (*KIT1, KIT2) (AC-DELCO #24210605)	96	F (M30)	1	24210605
6.	6-B17	4.226	**GASKET**, A/TRNS FLUID PUMP (TO CASE) (*KIT1, KIT2) (AC-DELCO #12337931)	96	F (M30)	1	12337931
7.	6-N28	5.556	**BUSHING**, PROP SHF FRT SLIP YOKE (ALSO PART OF 8) (INSIDE DIA 1.506-1.509) (PART OF TRANS CASE) (4.104) (AC-DELCO #8680027)	96	F (M30)	1	8680027
8.	6-A16	4.103	**CASE**, A/TRNS (REMAN) (INCL 7) (AC-DELCO #24212157)	96	F (LT1, M30)	1	24212157
	6-A16	4.103	**CASE**, A/TRNS (REMAN) (INCL 7) (AC-DELCO #24212159)	96	F (L36, M30)	1	24212159
9.	6-A16	4.104	**PIPE**, A/TRNS VENT	96	F (M30)	1	24202440
10.	6-A21	4.128	**FITTING**, TRANS FLUID CLR PIPE (TO CASE) (5/16) (AC-DELCO #8637742)	96	F (M30)	2	8637742
11.	6-A17	4.105	**ORIFICE**, FWD CLU FEED (6.4MM DIA) (NO DIMPLE) (4.104) (AC-DELCO #8628864)	96	F (M30)	1	8628864
12.	6-B22	4.233	**SPRING**, 2-4 BAND SERVO RTN (ORANGE) (AC-DELCO #8642273)	96	F (M30)	1	8642273
13.	6-B24	4.246	**PIN**, 2-4 BAND SERVO PSTN (I.D BY 1 GROOVE IN TAPPERED POINT) (4.228) (AC-DELCO #8680499)	96	F (M30)	1	8680499
	6-B24	4.246	**PIN**, 2-4 BAND SERVO PSTN (I.D BY 2 GROOVES IN TAPERED POINT) (4.228) (AC-DELCO #8680500)	96	F (M30)	1	8680500
	6-B24	4.246	**PIN**, 2-4 BAND SERVO PSTN (I.D BY NO GROOVES IN TAPPERED POINT) (4.228) (AC-DELCO #8680501)	96	F (M30)	1	8680501
14.	6-B8	4.176	**RING**, 2-4 BAND SERVO 2ND APPL PSTN RET (AC- DELCO #8642105)	96	F (M30)	1	8642105
15.	6-B22	4.233	**RETAINER**, 2-4 BAND SERVO CUSH SPR (AC-DELCO #8642416)	96	F (M30)	1	8642416
16.	6-B22	4.233	**SPRING**, 2-4 BAND SERVO PSTN CUSH (PINK) (AC-DELCO #8642539) (PINK 140 LBS)	96	F (M30)	1	8642539
17.		N.S.	**PISTON**, 2-4 BAND SERVO 2ND APPLY (*KIT2)				

cardiagn.com

18.		N.S.	**RING**, LOW & REV ACCUM PSTN OTR FLUID SEAL (*KIT1, KIT2, KIT5, KIT8)				
19.		N.S.	**RING**, LOW & REV ACCUM PSTN INR FLUID SEAL (*KIT1, KIT2, KIT5, KIT8)				
20.	6-B18	4.228	**HOUSING**, 2-4 BAND SERVO 2ND APPL (SERVO PISTON) (INNER) (AC-DELCO #8673039) (ALSO USE SEAL 08642112)	96	F (LT1, M30)	1	8673039
	6-B18	4.228	**HOUSING**, 2-4 BAND SERVO 2ND APPL (SERVO PISTON) (INNER) (.48) (AC-DELCO #8642463)	96	F (L36, M30)	1	8642463
21.	6-B21	4.229	**SEAL**, 2-4 BAND SERVO 2ND APPL PSTN HSG (O RING) (*KIT1, KIT2) (AC-DELCO #8642112)	96	F (M30)	1	8642112
22.	6-B24	4.246	**SPRING**, 2-4 BAND SERVO PSTN (AC-DELCO #24207758)	96	F (M30)	1	24207758
23.	6-B22	4.233	**WASHER**, 2-4 BAND SERVO PIN (3/8) (AC-DELCO #8642107)	96	F (M30)	1	8642107
24.		8.934	**RETAINER**, SNAP RING BOWED EXT .FITS SHFT 7/16 PL (OUTPUT SHF) (AC-DELCO #9415640)	96		AR	9415640
25.	6-B18	4.228	**PISTON**, 2-4 BAND SERVO 4TH APPLY (W/RING) (AC-DELCO #8642478)	96	F (M30)	1	8642478
26.	6-B21	4.229	**RING**, 2-4 BAND SERVO PSTN FLUID SEAL (*KIT1, KIT2) (AC-DELCO #8642480)	96	F (M30)	1	8642480
27.	6-B21	4.229	**SEAL**, 2-4 BAND SERVO CVR (O RING) (ALSO PART OF 28) (*KIT1, KIT2) (AC-DELCO #8647351)	96	F (M30)	1	8647351
28.	6-B18	4.228	**COVER**, 2-4 SERVO (W/SEAL) (INCL 27) (INCLS RING) (4.241) (AC-DELCO #8642979)	96	F (M30)	1	8642979
29.	6-B18	4.228	**RING**, 2-4 BAND SERVO CVR RET (AC-DELCO #8642124)	96	F (M30)	1	8642124
30.	6-C7	4.318	**SEAL**, A/TRNS CASE EXTN (*KIT1, KIT2) (AC-DELCO #1358899)	96	F (M30)	1	1358899
31.	6-C7	4.317	**EXTENSION**, A/TRNS CASE (REMAN) (W/ BUSH & SEAL) (AC-DELCO #24214690)	96	F (M30)	1	24214690
32.		8.900	**BOLT**, M10X1.5X27 (EXTN TO CASE)	96		AR	11503428
33.	6-N28	5.556	**BUSHING**, PROP SHF FRT SLIP YOKE (INSIDE DIAM 1.506-1.504 (PT OF TRANS EXT) (AC-DELCO #24207915)	96	F (M30)	1	24207915
34.	6-C7	4.318	**SEAL**, PROP SHF FRT SLIP YOKE OIL (NON-BOOTED) (*KIT1, KIT2)	96	F (M30)	1	24204540

cardiagn.com

35.	6-C8	4.329	**BOLT**, VEH SPD SEN (M6X1.0X15.0) (AC-DELCO #24200093)	96	F (M30)	1	24200093
36.	6-C8	4.329	**SENSOR**, VEH SPD (INCL 37) (AC-DELCO #213-328)	96	F (M30)	1	10456520
37.	6-C11	4.338	**SEAL**, VEH SPD SEN (O RING) (PART OF 36) (AC-DELCO #10475299)	96	F (M30)	1	10475299
38.	6-A17	4.105	**ORIFICE**, 3RD ACCUM BL (6.4MM DIA) (NO DIMPLE) (4.104) (AC-DELCO #8628864)	96	F (M30)	1	8628864
39.		8.971	**PLUG**, 1/8 NPTF (OIL PRESS TEST HOLE) (AC-DELCO #444613)	96		1	444613
40.	6-B18	4.228	**VALVE**, 3RD ACCUM BALL CHK (W/BALL) (AC-DELCO #8634400)	96	F (M30)	1	8634400
41.	6-B21	4.229	**PIN**, 2-4 BAND ANC (AC-DELCO #8654581)	96	F (M30)	1	8654581
42.	6-B9	4.180	**VALVE**, A/TRNS FLUID/PUMP CVR BALL CHK (DOUBLE ORIFICE) (W/BALL) (AC-DELCO #8663890)	96	F (M30)	3	8663890
43.	6-B18	4.228	**PIN**, 3-4 ACCUM PSTN (4.226) (AC-DELCO #8628273)	96	F (M30)	1	8628273
44.	6-B18	4.228	**PISTON**, 3-4 ACCUM (*KIT6) (AC-DELCO #8663608)	96	F (M30)	1	8663608
45.	6-B21	4.229	**RING**, 3-4 ACCUM PSTN FLUID SEAL (*KIT1, KIT2, KIT6) (AC-DELCO #24206509)	96	F (M30)	1	24206509
46.	6-B22	4.233	**SPRING**, 3-4 ACCUM PSTN (BLUE) (AC-DELCO #8639074)	96	F (M30)	1	8639074
47.		N.S.	**GASKET**, C/VLV BODY (*KIT1, KIT2, KIT4)				
48.	6-B25	4.265	**PLATE**, C/VLV BODY SPCR (AC-DELCO #24203951)	96	F (L36, M30)	1	24203951
	6-B25	4.265	**PLATE**, C/VLV BODY SPCR (AC-DELCO #24203953)	96	F (LT1, M30)	1	24203953
49.		N.S.	**FILTER**, SHFT SOL VLV FLUID (*KIT10)				
50.	6-B25	4.265	**FILTER**, PRESS CONT SOL VLV FLUID (*KIT10) (AC-DELCO #8683768)	96	F (M30)	1	8683768
52.		N.S.	**GASKET**, C/VLV BODY SPCR PLT (*KIT1, KIT2, KIT4)				
53.	6-B12	4.197	**COVER**, A/TRNS CASE FLUID PASG (4.265) (AC-DELCO #8682792)	96	F (M30)	1	8682792
54.	6-B22	4.233	**SPRING**, 1-2 ACCUM PSTN (INNER) (*KIT7) (AC-DELCO #8684431)	96	F (L36, M30)	1	8684431
	6-B22	4.233	**SPRING**, 1-2 ACCUM PSTN (ORANGE) (INNER) (*KIT7) (AC-DELCO #8685655)	96	F (LT1, M30)	1	8685655
	6-B22	4.233	**SPRING**, 1-2 ACCUM PSTN (VIOLET) (OTR) (*KIT7) (AC-DELCO #24209794)	96	F (M30)	1	24209794

cardiagn.com

	6-B22	4.233	**SPRING**, 1-2 ACCUM (*KIT7) (AC-DELCO #24212030)	96	F (LT1, M30)	1	24212030
55.	6-B21	4.229	**RING**, 1-2 ACCUM PSTN FLUID SEAL (*KIT1, KIT6, KIT7) (AC-DELCO #24206509)	96	F (M30)	1	24206509
56.		N.S.	**PISTON**, 1-2 ACCUM (*KIT1, KIT2, KIT6, KIT7)		.....		
57.	6-B18	4.228	**COVER**, 1-2 ACCUM (INCLS PIN) (*KIT7) (AC- DELCO #8686084)	96	F (M30)	1	8686084
	6-B18	4.228	**PIN**, 1-2 ACCUM PSTN (PART OF COVER) (*KIT7) (4.226) (AC-DELCO #8684426)	96	F (M30)	1	8684426
58.		8.900	**BOLT**, HFH M6X1X65 9.8 PL	96	.....	AR	11506078
59.		8.900	**BOLT**, HEX M6X1X35 10.9 PC (ACCUM CVR TO CASE) (AC-DELCO #11503870)	96	.....	AR	11503870
		8.929	**WASHER**, FLAT 5/16X5/8X1/16 ZP HARD	96	.....	AR	2436162
60.	6-B25	4.265	**VALVE KIT**, CONT (W/BODY & VLV) (AC-DELCO #24214855) ..	96	F (LT1, M30)	1	24214855
	6-B25	4.265	**VALVE**, CONT (W/BODY & VLV) (REMAN) (AC-DELCO #24214863)	96	F (L36, M30)	1	24214863
61.		8.899	**BALL**, GRADE 2, STD DIA 1/4 (2), CHROME STL (AC-DELCO #104918)	96	.....	AR	104918
62.	6-B25	4.265	**BOLT**, VLV BODY (M6X1X54.4) (AC-DELCO #8680741)	96	F (M30)	3	8680741
	6-B25	4.265	**BOLT**, VLV BODY (M6X1X47.5) (AC-DELCO #8680742)	96	F (M30)	9	8680742
	6-B25	4.265	**BOLT**, VLV BODY (M6X1X35) (8.900) (AC-DELCO #11503870)	96	F (M30)	2	11503870
	6-B25	4.265	**BOLT**, VLV BODY (M6X1X65) (8.900)	96	F (M30)	3	11506078
63.	6-C5	4.275	**DETENT**, MAN SHFT (CPS) (AC-DELCO #8642247)	96	F (M30)	1	8642247
	6-C6	4.293	**PIN**, MAN SHFT DTNT RLR (4.311) (AC-DELCO #6261174) .	96	F (M30)	1	6261174
64.		8.900	**BOLT-HEX**, M8X1.25X20, 16.88 THD, GM500 (10.9), PZOR, MACH (DTNT SPR TO VB) (AC-DELCO #11508687)	96	.....	AR	11508687
65.		N.S.	**SEAL**, WRG HARN PASS--THRU CONN O-RING (PART OF 66) ...		....		
66.	6-M28	2.480	**HARNESS**, A/TRNS WRG (INCL 65, 67) (INCLS TCC SOL VLV) (AC-DELCO #15320476)	96	F (M30)	1	15320476
	6-A19	4.122	**HARNESS**, A/TRNS WRG (INCL 65, 67) (INCLS TCC SOL VLV) (2.480) (AC-DELCO #15320476)	96	F (M30)	1	15320476
67.		N.S.	**SEAL**, TCC SOL VLV (O RING) (PART OF 66)		.. ..		
68.		8.900	**BOLT**, HEX M6X1X35 10.9 PC (TCC SOL VLV) (AC-DELCO #11503870)	96	....	AR	11503870

cardiagn.com

69.	6-B25	4.265	SWITCH, A/TRNS FLUID PRESS MAN VLV POSN (W/PLASTIC COVER) (AC-DELCO #24215111)	96	F (M30)	1	24215111
70.	6-B25	4.265	BOLT, A/TRNS FLUID PRESS MAN VLV POSN SW (M6X1X17.7) (AC-DELCO #8680764)	96	F (M30)	1	8680764
71.		N.S.	SEAL, A/TRNS FLUID FLTR (*KIT3)				
72.		N.S.	FILTER, A/TRNS FLUID (*KIT1, KIT2, KIT3)				
73.	6-B11	4.196	GASKET, A/TRNS FLUID PAN (ALSO PART OF 75) (*KIT1, KIT2, KIT3) (AC-DELCO #8654799)	96	F (M30)	1	8654799
74.	6-B11	4.195	MAGNET, A/TRNS FLUID PAN (ALSO PART OF 75) (4.105) (AC-DELCO #8665830)	96	F (M30)	1	8665830
75.	6-B11	4.195	PAN KIT, A/TRNS FLUID (INCL ITEMS 73, 74) (SHALLOW W/PAN, GSKT & MAGNET, DRAIN PLUG NOT INCLUDED) (AC-DELCO #8663948)	96	F (M30)	1	8663948
76.	6-B11	4.196	BOLT, A/TRNS FLUID PAN (M8X1.25X19, 16)	96	F (M30)	16	8657000
77.	6-B12	4.197	BOLT, FLUID PASG CVR (M6X1X17.7) (4.265) (AC-DELCO #8680764)	96	F (M30)	3	8680764
78.	6-C6	4.294	PLUG, PARK PAWL SHF HOLE (ALSO PART OF 79) (.38 DIA) (AC-DELCO #8620318)	96	F (M30)	1	8620318
79.	6-C6	4.294	PAWL KIT, PARK (INCLS 78, 81) (INST SHT, PAWL, PLUG & SHF) (AC-DELCO #8669911)	96	F (M30)	1	8669911
80.	6-C7	4.295	SPRING, PARK PAWL (AC-DELCO #8642193)	96	F (M30)	1	8642193
81.		N.S.	PAWL PARK (PART OF 79)				
82.	6-C6	4.282	SEAL, MAN SHFT SHF (ALSO PART OF 84) (*KIT1, KIT2) (AC-DELCO #8657163)	96	F (M30)	1	8657163
83.	6-C5	4.275	RETAINER, MAN SHFT SHF (AC-DELCO #8642246)	96	F (M30)	1	8642246
84.	6-C6	4.294	SHAFT KIT, MAN SHFT (INCL 82) (SHORT) (INCLS SEAL, INDIVIDUAL COMPONENT NOT SOLD SEPARATELY) (AC-DELCO #24210712)	96	F (M30)	1	24210712
	6-C6	4.294	SHAFT KIT, MAN SHFT (INCL 82) (128.2MM) (LONG) (INCLS SEAL) (AC-DELCO #24210711)	96	F (M30)	1	24210711
85.	6-C6	4.290	ACTUATOR, PARK PAWL (INCLS ACTUATOR, ROD & SPRINGS) (AC-DELCO #8667517)	96	F (M30)	1	8667517
86.	6-C6	4.290	BRACKET, PARK PAWL ACTR (AC-DELCO #8667574)	96	F (M30)	1	8667574

cardiagn.com

							GM04-467F
87.		8.900	**BOLT-HEX**, M8X1.25X20, 16.88 THD, GM500 (10.9), PZOR, MACH (PARK LOCK BRACKET TO CASE) (AC-DELCO #11508687)	96	.....	AR	11508687
88.	6-C6	4.279	**LEVER**, MAN SHFT DTNT (GOLD) (SQUARE HOLE) (AC-DELCO #8654106)	96	F (M30)	1	8654106
89.	6-C5	4.275	**LINK**, MAN VLV (*KIT1, KIT2) (AC-DELCO #8680731)	96	F (M30)	1	8680731
90.	6-C5	4.275	**NUT**, MAN SHFT DTNT LVR (M10X15.6H THD) (AC-DELCO #8648178)	96	F	1	8648178
91.		8.899	**BALL**, GRADE 2, STD DIA 1/4 (2), CHROME STL (NO. 10 CHECKBALL) (AC-DELCO #104918)	96	.....	AR	104918
93.	6-A22	4.133	**STOP**, TRANS FLUID LVL IND	96	F (M30)	1	8684890
377.		N.S.	**VALVE**, PRESS CONT SOL (*KIT10)		.....		
SERVICE KITS							
	6-A9	4.003	**TRANSMISSION**, AUTO (GOODWRENCH REMAN) (CODE 6FCD)	96	F (L36, M30, GU6)	1	24203881
	6-A9	4.003	**TRANSMISSION**, AUTO (GOODWRENCH REMAN) (CODE 6FBD)	96	F (L36, M30, GU4)	1	24203882
	6-A9	4.003	**TRANSMISSION**, AUTO (GOODWRENCH REMAN) (CODE 7FFD)	96	F (LT1, M30, GU2, GU5)	1	24207578
1.	6-A12	4.005	**GASKET KIT**, A/TRNS SERV (INCL 2, 5, 6, 18-9, 21, 26-7, 30, 34, 44-5, 47, 52, 55-6, 72-3, 82, 89) (W/O PLATES OR PISTONS) (AC-DELCO #24201803)	96	F (M30)	1	24201803
2.		N.S.	**TRANSMISSION KIT**, AUTO (SERV OVERHAUL W/PLT, GSKT, SEAL) (USE 24201803 GASKET KIT T/W 24201808 PLATE KIT T/W 24204496 PISTON KIT.)		.....		
3.	6-B12	4.197	**FILTER KIT**, A/TRNS FLUID (INCL 71-73) (USED W/SHALLOW PAN) (AC-DELCO #24200796) ..	96	F (M30)	1	24200796
4.	6-B25	4.265	**GASKET KIT**, C/VLV BODY SPCR PLT (INCL 47, 52) (AC-DELCO #8685951)	96	F (M30)	1	8685951
5.	6-B21	4.229	**RING KIT**, 2-4 BAND SERVO 2ND APPL PSTN FLUID SEAL (INCL 19) (55 RATIO) (INCLS INR & OTR RING) (AC-DELCO #8642924)	96	F (M30)	1	8642924
	6-B21	4.229	**RING KIT**, 2-4 BAND SERVO 2ND APPL PSTN FLUID SEAL (INCL 18, 19) (.74 RATIO) (INCLS 2 RINGS) (AC-DELCO #8642925)	96	F (M30)	1	8642925

cardiagn.com

6.	6–B18	4.228	PISTON KIT, 1--2 & 3--4 ACCUM (INCL 44, 45, 55, 56) (W/RINGS & ALUM PISTONS) (AC–DELCO #24204496)	96	F (M30)	1	24204496
7.	6–B18	4.228	ACCUMULATOR, 1--2 (INCL 43, 54–7) (AC--DELCO #8684452) ..	96	F (L36, M30)	1	8684452
	6–B18	4.228	ACCUMULATOR, 1–2 (INCL 43, 54--7) (AC--DELCO #24201956)	96	F (LT1, M30)	1	24201956
8.	6–B18	4.228	PISTON KIT, 2–4 BAND SERVO 2ND APPLY (INCL 17, 18, 19) (YELLOW) (.74) (AC–DELCO #8642079)	96	F (LT1, M30)	1	8642079
	6–B18	4.228	PISTON KIT, 2–4 BAND SERVO 2ND APPLY (INCL 17, 18, 19) (W/RINGS) (AC–DELCO #8642613)	96	F (L36, M30)	1	8642613
10.	6–B25	4.265	VALVE KIT, PRESS CONT SOL (W/SHFT SOL VLV FLUID FLTR) (INCL 49, 50, 377) (AC–DELCO #24216254)	96	F (M30)	1	24216254

RPO DEFINITIONS
GU2 – AXLE,REAR,2.73 RATIO
GU4 – AXLE,REAR,3.08 RATIO
GU5 – AXLE,REAR,3.23 RATIO
GU6 – AXLE,REAR,3.42 RATIO
LT1 – ENGINE–GAS, 8 CYL, 5.7L(5.7P).MFI,HO
L36 – ENGINE GAS, 6 CYL, 3.8K, MFI, V6, HO (ERV6 SERIES)
M30 – TRANSMISSION,AUTOMATIC 4 SPEED,4L60E,ELECTRONIC

cardiagn.com

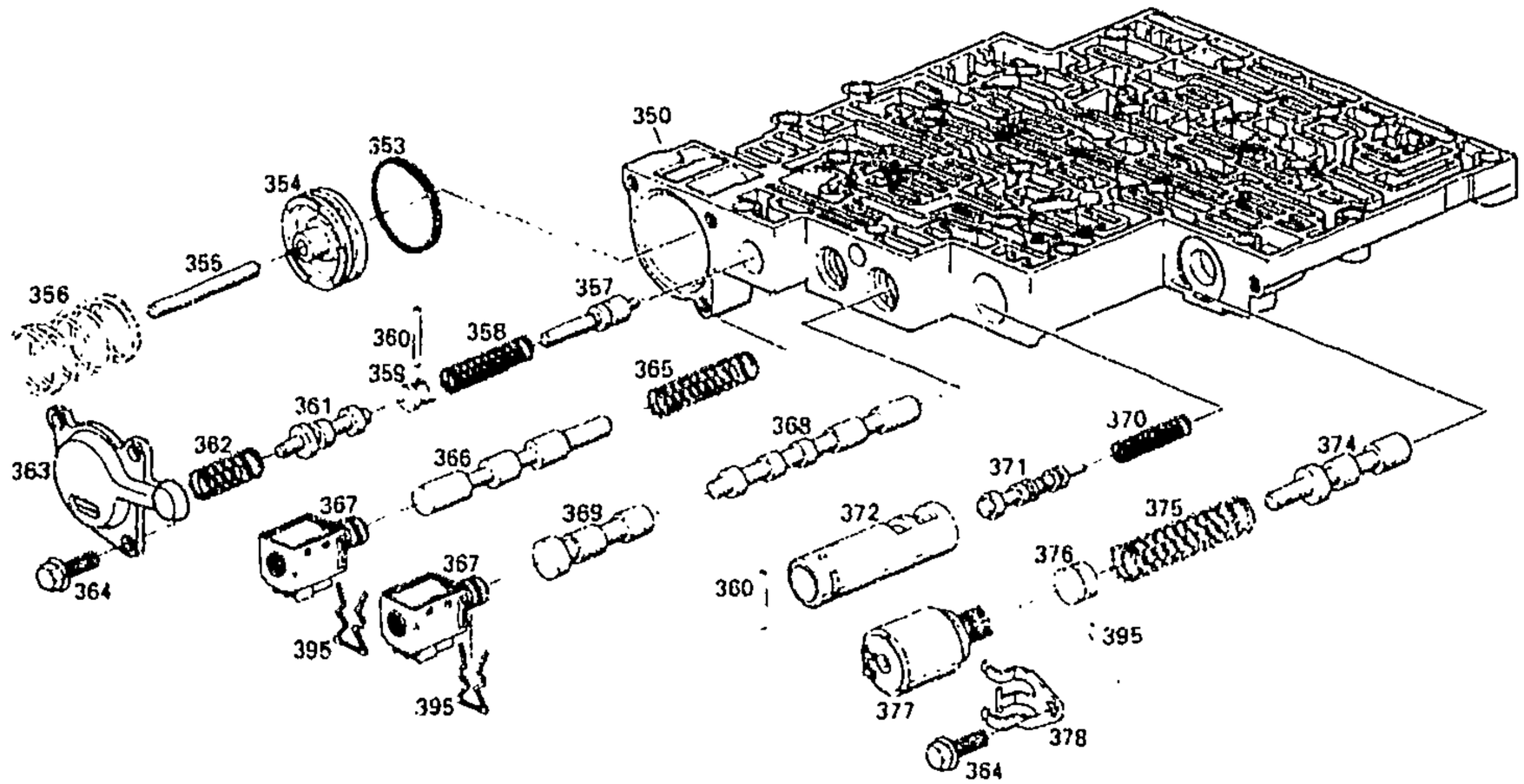

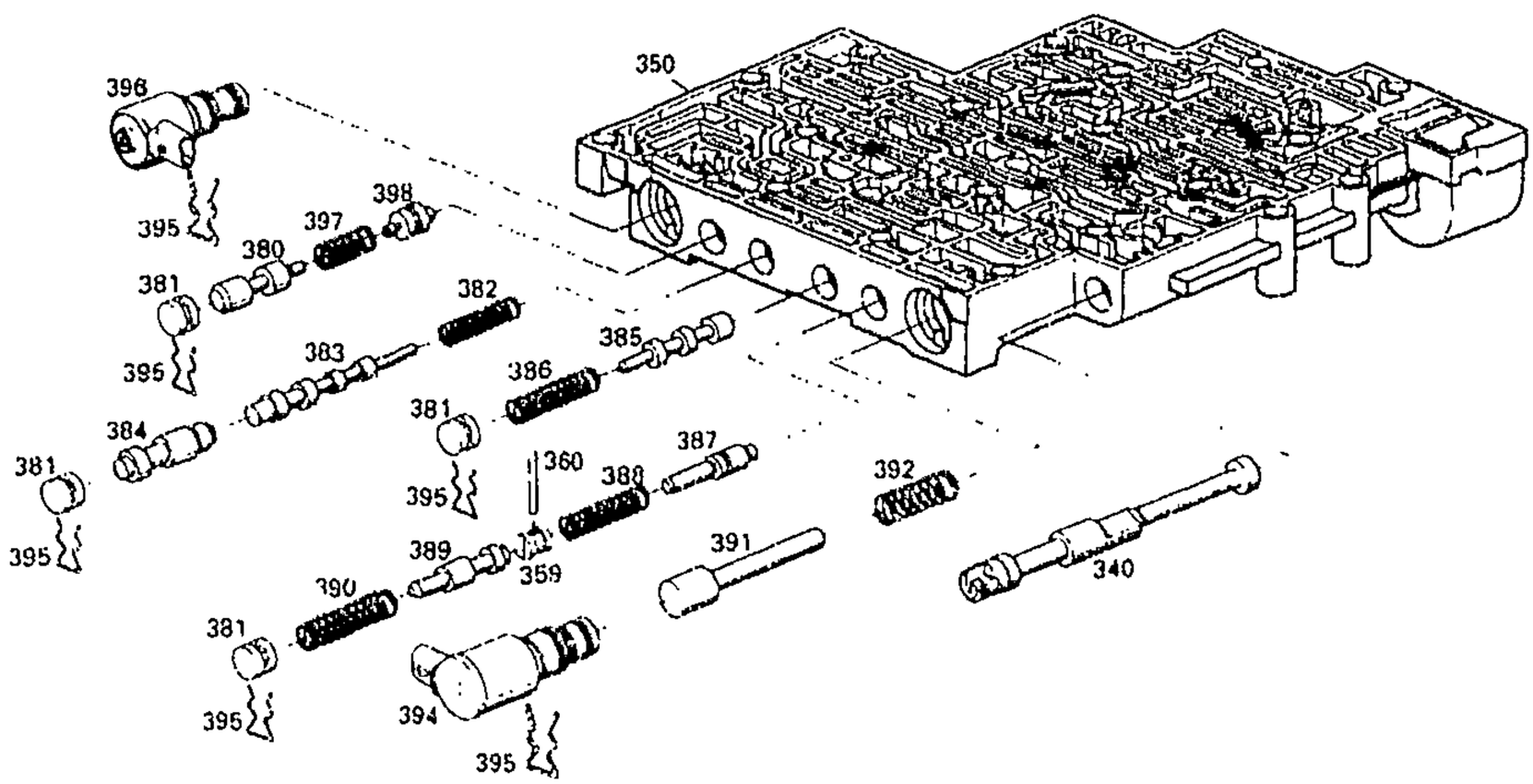

GM04-469F

1996-2002 F AUTOMATIC TRANSMISSION (M30) PART 3 (4L60E) CONTROL VALVE

340.	6-C6	4.279	VALVE, MAN (*KIT1) (4.265) (AC-DELCO #24203484)	96-02	F (M30)	1	24203484
350.		N.S.	BODY, C/VLV (*KIT1)		.....		
353.	6-B21	4.229	RING, FWD CLU ACCUM PSTN FLUID SEAL (*KIT1) (AC-DELCO #8680653)	96-97	F (M30)	1	8680653

cardiagn.com

	6-B21	4.229	RING, FWD CLU ACCUM PSTN FLUID SEAL (*KIT1) (AC-DELCO #24206508)	98-02	F (M30)	1	24206508
354.	6-B18	4.228	PISTON, FWD CLU ACCUM (*KIT1) (AC-DELCO #24200126)	96-02	F (M30)	1	24200126
355.		N.S.	PIN, 1-2 ACCUM PSTN (*KIT1)				
		N.S.	PIN, 2-3 ACCUM PSTN (*KIT1)				
356.	6-B22	4.233	SPRING, FWD CLU ACCUM PSTN (*KIT1) (AC-DELCO #24208765)	96-97	F (LT1, M30)	1	24208765
	6-B22	4.233	SPRING, FWD CLU ACCUM PSTN (*KIT1) (AC-DELCO #24200019)	96-00	F (L36, M30)	1	24200019
	6-B22	4.233	SPRING, FWD CLU ACCUM PSTN (*KIT1) (AC-DELCO #24208765)	98-02	F (LS1, M30)	1	24208765
357.		N.S.	VALVE, FWD CLU ABUSE (*KIT1)				
358.		N.S.	SPRING, FWD CLU ABUSE VLV (*KIT1)				
359.		N.S.	PLUG, TCC C/VLV BORE (*KIT1)				
360.	6-B7	4.169	PIN, FWD CLU ABUSE VLV BORE PLUG (*KIT1) (4.265) (AC-DELCO #8680765)	96-02	F (M30)	1	8680765
	6-B25	4.265	PIN, REV ABUSE VLV BORE PLUG (*KIT1) (AC-DELCO #8680765)	96-02	F (M30)	1	8680765
	6-B25	4.265	PIN, 1-2 ACCUM VLV BORE PLUG (*KIT1) (AC-DELCO #8680765)	96-02	F (M30)	1	8680765
361.		N.S.	VALVE, LOW OVERRUN (*KIT1)				
362.		N.S.	SPRING, LOW OVERRUN VLV (*KIT1)				
363.	6-B18	4.228	COVER, FWD CLU ACCUM (W/SLOTS) (*KIT1) (AC-DELCO #24206338)	96-02	F (M30)	1	24206338
364.	6-B24	4.241	BOLT, FWD CLU ACCUM CVR (M6X1X17 7) (*KIT1) (4.265) (AC-DELCO #8680764)	96-02	F (M30)	3	8680764
	6-B25	4.265	BOLT, PRESS CONT SOL VLV CLA (M6X1X17.7) (*KIT1) (AC-DELCO #8680764)	96-02	F (M30)	3	8680764
365.		N.S.	SPRING, 1-2 SHFT VLV (*KIT1)				
366.		N.S.	VALVE, 1-2 SHFT (*KIT1)				
367.	6-B25	4.265	VALVE, 1-2, 3-4 SHFT SOL (INCLS SEAL) (*KIT1) (AC-DELCO #10478131)	96-02	F (M30)	1	10478131
	6-B25	4.265	VALVE, 2-3 SHFT SOL (INCLS SEAL) (*KIT1) (AC-DELCO #10478131)	96-02	F (M30)	1	10478131
368.		N.S.	VALVE, 2-3 SHUTTLE (*KIT1)				
369.		N.S.	VALVE, 2-3 SHFT (*KIT1)				
370.		N.S.	SPRING, 1-2 ACCUM VLV (*KIT1)				
371.		N.S.	VALVE, 1-2 ACCUM (*KIT1)				
372.		N.S.	SLEEVE, 1-2 ACCUM VLV (*KIT1)				
374.		N.S.	VALVE, ACTR FEED LIM (*KIT1)				

cardiagn.com

375.		N.S.	SPRING, ACTR FEED LIM VLV (*KIT1)				
376.		N.S.	PLUG, TCC C/VLV BORE (*KIT1)				
377.		N.S.	VALVE, PRESS CONT SOL (*KIT1, KIT2)	96-97			
	6-B25	4.265	VALVE, PRESS CONT SOL (*KIT1) (AC-DELCO #24209276)	98-00	F (M30)	1	24209276
	6-B25	4.265	VALVE, PRESS CONT SOL (*KIT1) (AC-DELCO #24220158)	01-02	F (M30)	1	24220158
378.	6-B25	4.265	CLAMP, PRESS CONT SOL VLV (*KIT1) (AC-DELCO #8682007)	96-02	F (M30)	1	8682007
380.		N.S.	VALVE, TCC (*KIT1)				
381.		N.S.	PLUG, TCC C/VLV BORE (*KIT1)				
382.		N.S.	SPRING, 4-3 SEQUENCE VLV (*KIT1)				
383.		N.S.	VALVE, 4-3 SEQUENCE (*KIT1)				
384.		N.S.	VALVE, 3-4 RLY (*KIT1)				
385.		N.S.	VALVE, 3-4 SHFT (*KIT1)				
386.		N.S.	SPRING, 3-4 SHFT VLV (*KIT1)				
387.		N.S.	VALVE, ABUSE (REV) (*KIT1)				
388.		N.S.	SPRING, ABUSE VLV (REV) (*KIT1)				
389.		N.S.	VALVE, 3-2 DNSHFT (*KIT1)				
390.		N.S.	SPRING, 3-2 DNSHFT VLV (*KIT1)				
391.		N.S.	VALVE, 2-3 CONT (*KIT1)				
392.		N.S.	SPRING, 3-2 C/VLV (*KIT1)				
394.	6-B25	4.265	VALVE, 3-2 SHFT SOL (*KIT1) (4.122) (AC-DELCO #24212327)	96-02	F (M30)	1	24212327
395.	6-B25	4.265	RETAINER, TCC PWM SOL VLV (*KIT1) (AC-DELCO #8680781)	96-02	F (M30)	1	8680781
	6-B25	4.265	RETAINER, 1-2, 3-4 SHFT SOL VLV (*KIT1) (AC-DELCO #8680781)	96-02	F (M30)	1	8680781
	6-B25	4.265	RETAINER, 2-3 SHFT SOL VLV (*KIT1) (AC-DELCO #8680781)	96-02	F (M30)	1	8680781
	6-B25	4.265	RETAINER, 3-4 SHFT VLV BORE PLUG (*KIT1) (AC-DELCO #8680781)	96-02	F (M30)	1	8680781
	6-B25	4.265	RETAINER, ACTR FEED LIM VLV BORE PLUG (*KIT1) (AC-DELCO #8680781)	96-02	F (M30)	1	8680781
	6-B25	4.265	RETAINER, TCC SIG VLV BORE PLUG (*KIT1) (AC-DELCO #8680781)	96-02	F (M30)	1	8680781
	6-B25	4.265	RETAINER, 3-4 RLY VLV BORE PLUG (*KIT1) (AC-DELCO #8680781)	96-02	F (M30)	1	8680781
	6-B25	4.265	RETAINER, 3-2 DNSHFT VLV BORE PLUG (*KIT1) (AC-DELCO #8680781)	96-02	F (M30)	1	8680781
	6-B25	4.265	RETAINER, 3-2 SHFT SOL VLV (*KIT1) (AC-DELCO #8680781)	96-02	F (M30)	1	8680781
396.	6-B25	4.265	VALVE, TCC PWM SOL (*KIT1) (4.122) (AC-DELCO #24212690)	96-02	F (M30)	1	24212690
397.		N.S.	SPRING, TCC C/VLV (*KIT1)				
398.		N.S.	VALVE, TCC PWM SOL (*KIT1)				

cardiagn.com

SERVICE KITS

1.	6-B25	4.265	VALVE KIT, CONT (W/BODY & VLV) (INCL 340-398) (AC-DELCO #24214855)	96	F (LT1, M30)	1	24214855
	6-B25	4.265	VALVE KIT, CONT (W/BODY & VLV) (INCL 340-398) (AC-DELCO #24205499)	97	F (LT1, M30)	1	24205499
	6-B25	4.265	VALVE, CONT (W/BODY & VLV) (REMAN) (INCL 340-398) (AC-DELCO #24214863)	96	F (L36, M30)	1	24214863
	6-B25	4.265	VALVE, CONT (W/BODY & VLV) (REMAN) (INCL 340-398) (AC-DELCO #24214869)	97	F (L36, M30)	1	24214869
	6-B25	4.265	VALVE, CONT (W/BODY & VLV) (REMAN) (INCL 340-398) (AC-DELCO #24214879)	98-99	F (L36, M30)	1	24214879
	6-B25	4.265	VALVE, CONT (W/BODY & VLV) (REMAN) (INCL 340-398) (AC-DELCO #24214880)	98-99	F (LS1, M30)	1	24214880
	6-B25	4.265	VALVE, CONT (W/BODY & VLV) (INCL 340-398) (AC-DELCO #24210317)	00	F (LS1, M30)	1	24210317
	6-B25	4.265	VALVE, CONT (W/BODY & VLV) (INCL 340-398) (AC-DELCO #24210322)	00	F (L36, M30)	1	24210322
	6-B25	4.265	VALVE, CONT (W/BODY & VLV) (INCL 340-398) (AC-DELCO #24218186) (BUILT ON JULIAN DATE 01-032 & FUTURE)	01-02	F (LS1, M30)	1	24218186
	6-B25	4.265	VALVE, CONT (W/BODY & VLV) (INCL 340-398) (AC-DELCO #24218189) (BUILT ON JULIAN DATE 01-032 & FUTURE)	01-02	F (L36, M30)	1	24218189
	6-B25	4.265	VALVE, CONT (W/BODY & VLV) (INCL 340-398) (AC-DELCO #24218826) (BUILT ON JULIAN DATE 01-031 & PRIOR)	01	F (L36, M30)	1	24218826
2.	6-B25	4.265	VALVE KIT, PRESS CONT SOL (W/SHFT SOL VLV FLUID FLTR) (INCL 377) (AC-DELCO #24216254)	96-97	F (M30)	1	24216254

RPO DEFINITIONS

LS1 - ENGINE GAS, 8 CYL, 5.7L, SFI, ALUMINUM ENGINE
LT1 - ENGINE-GAS, 8 CYL, 5.7L(5.7P),MFI,HO
L36 - ENGINE GAS, 6 CYL, 3.8K, MFI, V6, HO (ERV6 SERIES)
M30 - TRANSMISSION,AUTOMATIC 4 SPEED,4L60E,ELECTRONIC

cardiagn.com

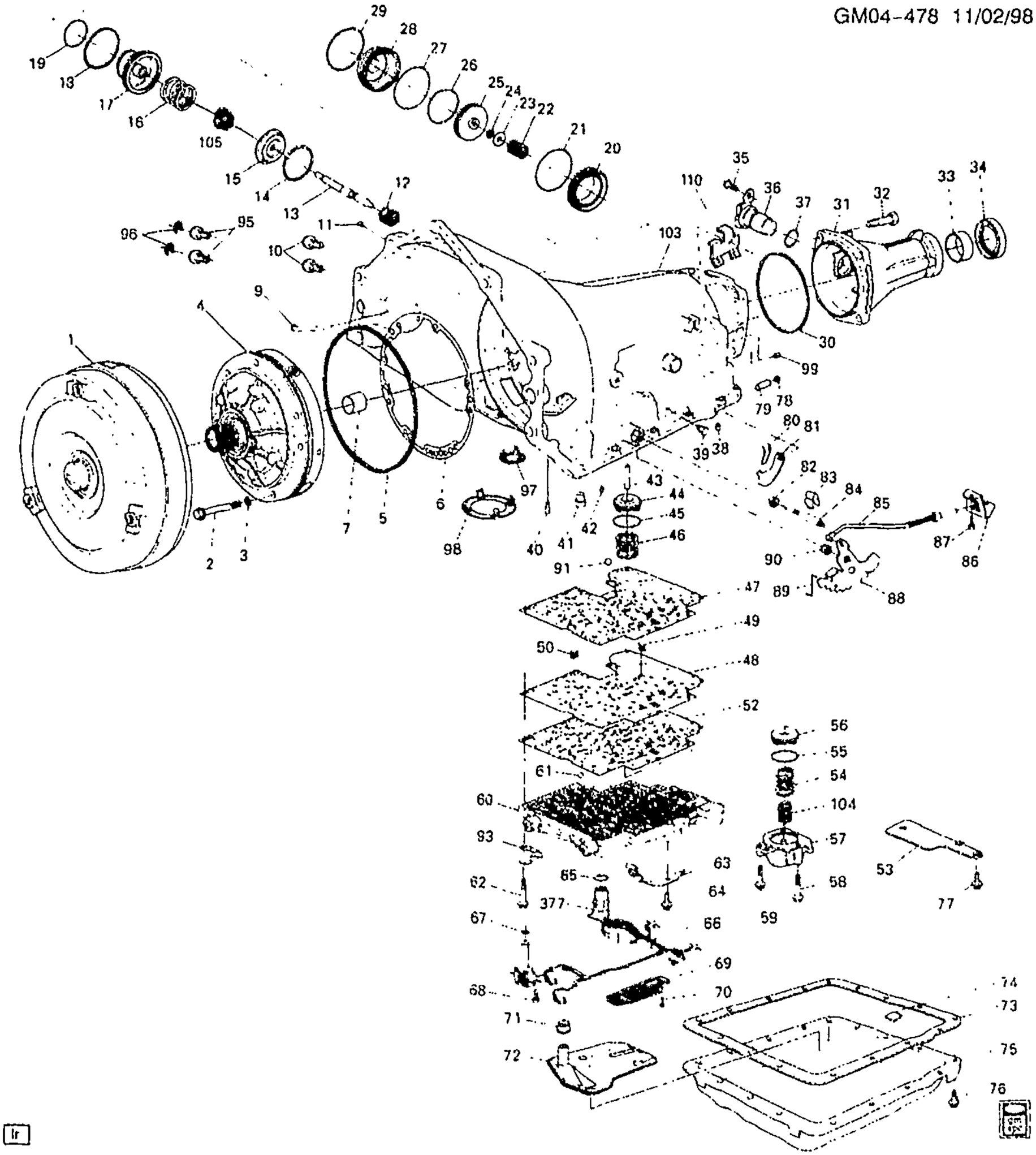

GM04-478F

1997 F AUTOMATIC TRANSMISSION (M30) PART 1 (4L60E) CASE & RELATED PARTS/PARK LOCK LINKAGE

1.	6-A17	4.115	CONVERTER, TORQ (REMAN) (CODE 6FBD-7FBD)	97 F (L36, M30, GU4)	1	24202522
	6-A17	4.115	CONVERTER TORQ (REMAN) (CODE HLHD)	97 F (L36, M30, GU6)	1	24203426

cardiagn.com

	6-A17	4.115	CONVERTER, TORQ (REMAN) (CODE DHHG)	97	F (LT1, M30)	1	24208646
2.	6-B17	4.226	BOLT, A/TRNS FLUID PUMP (M8X1.25X60) (INCLS SEAL) (*KIT1, KIT2) (AC-DELCO #24210819)	97	F (M30)	7	24210819
3.	6-B17	4.226	SEAL, A/TRNS FLUID PUMP BOLT (AC-DELCO #12337996)	97	F (M30)	7	12337996
4.		N.S.	PUMP, A/TRNS OIL (SEE PUMP ILLUSTRATION)				
5.	6-B17	4.226	SEAL, A/TRNS FLUID PUMP (*KIT1, KIT2) (AC-DELCO #24210605)	97	F (M30)	1	24210605
6.	6-B17	4.226	GASKET, A/TRNS FLUID PUMP (TO CASE) (*KIT1, KIT2) (AC-DELCO #12337931)	97	F (M30)	1	12337931
7.	6-N28	5.556	BUSHING, PROP SHF FRT SLIP YOKE (ALSO PART OF 8) (INSIDE DIA 1.506-1.509) (PART OF TRANS CASE) (4.104) (AC-DELCO #8680027)	97	F (M30)	1	8680027
9.	6-A16	4.104	PIPE, A/TRNS VENT	97	F (M30)	1	24202440
10.	6-A21	4.128	FITTING, TRANS FLUID CLR PIPE (5/16) (AC-DELCO #8637742)	97	F (M30)	2	8637742
11.	6-A17	4.105	ORIFICE, FWD CLU FEED (6.4MM DIA) (NO DIMPLE) (4.104) (AC-DELCO #8628864)	97	F (M30)	1	8628864
12.	6-B22	4.233	SPRING, 2-4 BAND SERVO RTN (ORANGE) (AC-DELCO #8642273)	97	F (M30)	1	8642273
13.	6-B24	4.246	PIN, 2-4 BAND SERVO PSTN (I.D BY 1 GROOVE IN TAPPERED POINT) (4.228) (AC-DELCO #8680499)	97	F (M30)	1	8680499
	6-B24	4.246	PIN, 2-4 BAND SERVO PSTN (I.D BY 2 GROOVES IN TAPERED POINT) (4.228) (AC-DELCO #8680500)	97	F (M30)	1	8680500
	6-B24	4.246	PIN, 2-4 BAND SERVO PSTN (I.D BY NO GROOVES IN TAPPERED POINT) (4.228) (AC-DELCO #8680501)	97	F (M30)	1	8680501
14.	6-B8	4.176	RING, 2-4 BAND SERVO 2ND APPL PSTN RET (AC-DELCO #8642105)	97	F (M30)	1	8642105
15.	6-B22	4.233	RETAINER, 2-4 BAND SERVO CUSH SPR (AC-DELCO #8642416)	97	F (M30)	1	8642416
16.	6-B22	4.233	SPRING, 2-4 BAND SERVO PSTN CUSH (PINK) (AC-DELCO #8642539) (PINK 140 LBS)	97	F (M30)	1	8642539
17.		N.S.	PISTON, 2-4 BAND SERVO 2ND APPLY (*KIT8)				
18.		N.S.	RING, LOW & REV ACCUM PSTN OTR FLUID SEAL (*KIT1, KIT2, KIT5, KIT8)				

cardiagn.com

19.		N.S.	RING, LOW & REV ACCUM PSTN INR FLUID SEAL (*KIT1, KIT2, KIT5, KIT8)				
20.	6-B18	4.228	HOUSING, 2-4 BAND SERVO 2ND APPL (SERVO PISTON) (INNER) (AC-DELCO #8673039) (ALSO USE SEAL 08642112)	97	F (LT1, M30)	1	8673039
	6-B18	4.228	HOUSING, 2- 4 BAND SERVO 2ND APPL (SERVO PISTON) (INNER) (.55) (AC-DELCO #8673041)	97	F (L36, M30)	1	8673041
21.	6-B21	4.229	SEAL, 2-4 BAND SERVO 2ND APPL PSTN HSG (O RING) (*KIT1, KIT2) (AC-DELCO #8642112)	97	F (M30)	1	8642112
22.	6-B24	4.246	SPRING, 2-4 BAND SERVO PSTN (AC-DELCO #24207758)	97	F (M30)	1	24207758
23.	6-B22	4.233	WASHER, 2-4 BAND SERVO PIN (3/8) (AC-DELCO #8642107)	97	F (M30)	1	8642107
24.		8.934	RETAINER, SNAP RING BOWED EXT .FITS SHFT 7/16 PL (OUTPUT SHF) (AC-DELCO #9415640)	97		AR	9415640
25.	6-B18	4.228	PISTON, 2--4 BAND SERVO 4TH APPLY (W/RING) (AC-DELCO #8642478)	97	F (M30)	1	8642478
26.	6-B21	4.229	RING, 2-4 BAND SERVO PSTN FLUID SEAL (*KIT1, KIT2) (AC-DELCO #3642480)	97	F (M30)	1	8642480
27.	6-B21	4.229	SEAL, 2-4 BAND SERVO CVR (O RING) (ALSO PART OF 28) (*KIT1, KIT2) (AC-DELCO #8647351)	97	F (M30)	1	8647351
28.	6-B18	4.228	COVER, 2-4 SERVO (W/SEAL) (INCL 27) (INCLS RING) (4.241) (AC-DELCO #8642979)	97	F (M30)	1	8642979
29.	6-B18	4.228	RING, 2-4 BAND SERVO CVR RET (AC-DELCO #8642124)	97	F (M30)	1	8642124
30.	6-C7	4.318	SEAL, A/TRNS CASE EXTN (*KIT1, KIT2) (AC-DELCO #1358899)	97	F (M30)	1	1358899
31.	6-C7	4.317	EXTENSION, A/TRNS CASE (REMAN) (W/ BUSH & SEAL) (AC-DELCO #24214690)	97	F (M30)	1	24214690
32.		8.900	BOLT, M10X1 5X27 (EXTN TO CASE)	97		AR	11503428
33.	6-N28	5.556	BUSHING, PROP SHF FRT SLIP YOKE (INSIDE DIAM 1.506-1.504 (PT OF TRANS EXT) (AC-DELCO #24207915)	97	F (M30)	1	24207915
34.	6-C7	4.318	SEAL, PROP SHF FRT SLIP YOKE OIL (NON-BOOTED) (*KIT1, KIT2)	97	F (M30)	1	24204540
35.	6-C8	4.329	BOLT, VEH SPD SEN (M6X1.0X15.0) (AC-DELCO #24200093)	97	F (M30)	1	24200093

cardiagn.com

36.	6-C8	4.329	SENSOR, VEH SPD (INCL 37) (AC-DELCO #213-328)	97	F (M30)	1	10456520
37.	6-C11	4.338	SEAL, VEH SPD SEN (O RING) (PART OF 36) (AC-DELCO #10475299)	97	F (M30)	1	10475299
38.	6-A17	4.105	ORIFICE, 3RD ACCUM BL (6.4MM DIA) (NO DIMPLE) (4.104) (AC-DELCO #8628864)	97	F (M30)	1	8628864
39.		8.971	PLUG, 1/8 NPTF (OIL PRESS TEST HOLE) (AC-DELCO #444613)	97		1	444613
40.	6-B18	4.228	VALVE, 3RD ACCUM BALL CHK (W/BALL) (AC-DELCO #8634400)	97	F (M30)	1	8634400
41.	6-B21	4.229	PIN, 2-4 BAND ANC (AC-DELCO #8654581)	97	F (M30)	1	8654581
42.	6-B9	4.180	VALVE, A/TRNS FLUID/PUMP CVR BALL CHK (DOUBLE ORIFICE) (W/BALL) (AC-DELCO #8663890)	97	F (M30)	3	8663890
43.	6-B18	4.228	PIN, 3-4 ACCUM PSTN (4.226) (AC-DELCO #8628273)	97	F (M30)	1	8628273
44.	6-B18	4.228	PISTON, 3-4 ACCUM (*KIT6) (AC-DELCO #8663608)	97	F (M30)	1	8663608
45.	6-B21	4.229	RING, 3-4 ACCUM PSTN FLUID SEAL (*KIT1, KIT2, KIT6) (AC-DELCO #24206509)	97	F (M30)	1	24206509
46.	6-B22	4.233	SPRING, 3-4 ACCUM PSTN (BLUE) (AC-DELCO #8639074)	97	F (M30)	1	8639074
47.		N.S.	GASKET, C/VLV BODY (*KIT1, KIT2, KIT4)				
48.	6-B25	4.265	PLATE, C/VLV BODY SPCR (AC-DELCO #24203951)	97	F (L36, M30)	1	24203951
	6-B25	4.265	PLATE, C/VLV BODY SPCR (AC-DELCO # 24203953)	97	F (LT1, M30)	1	24203953
49.		N.S.	FILTER, SHFT SOL VLV FLUID (*KIT10)				
50.	6-B25	4.265	FILTER, PRESS CONT SOL VLV FLUID (*KIT10) (AC-DELCO #8683768)	97	F (M30)	1	8683768
52.		N.S.	GASKET, C/VLV BODY SPCR PLT (*KIT1, KIT2, KIT4)				
53.	6-B12	4.197	COVER, A/TRNS CASE FLUID PASG (4.265) (AC-DELCO #8682792)	97	F (M30)	1	8682792
54.	6-B22	4.233	SPRING, 1-2 ACCUM PSTN (VIOLET) (OTR) (*KIT7) (AC-DELCO #24209794)	97	F (M30)	1	24209794
55.	6-B21	4.229	RING, 1-2 ACCUM PSTN FLUID SEAL (*KIT1, KIT6, KIT7) (AC-DELCO #24206509)	97	F (M30)	1	24206509
56.		N.S.	PISTON, 1-2 ACCUM (*KIT1, KIT2, KIT6, KIT7)				
57.	6-B18	4.228	COVER, 1-2 ACCUM (INCLS PIN) (*KIT7) (AC-DELCO #8686084)	97	F (M30)	1	8686084

cardiagn.com

	6-B18	4.228	PIN, 1-2 ACCUM PSTN (PART OF COVER) (*KIT7) (4.226) (AC-DELCO #8684426)	97	F (M30)	1	8684426
59.		8.900	BOLT, HFH M6X1X65 9.8 PL	97		AR	11506078
59.		8.900	BOLT, HEX M6X1X35 10.9 PC (ACCUM CVR TO CASE) (AC-DELCO #11503870)	97		AR	11503870
		8.929	WASHER, FLAT 5/16X5/8X1/16 ZP HARD	97		AR	2436162
60.	6-B25	4.265	VALVE KIT, CONT (W/BODY & VLV) (AC-DELCO #24205499)	97	F (LT1, M30)	1	24205499
	6-B25	4.265	VALVE, CONT (W/BODY & VLV) (REMAN) (AC-DELCO #24214869)	97	F (L36, M30)	1	24214869
61.		8.899	BALL, GRADE 2, STD DIA 1/4 (2), CHROME STL (AC-DELCO #104918)	97		AR	104918
62.	6-B25	4.265	BOLT, VLV BODY (M6X1X54.4) (AC-DELCO #8680741)	97	F (M30)	3	8680741
	6-B25	4.265	BOLT, VLV BODY (M6X1X47.5) (AC-DELCO #8680742)	97	F (M30)	9	8680742
	6-B25	4.265	BOLT, VLV BODY (M6X1X35) (8.900) (AC-DELCO #11503870)	97	F (M30)	2	11503870
	6-B25	4.265	BOLT, VLV BODY (M6X1X65) (8.900)	97	F (M30)	3	11506078
63.	6-C5	4.275	DETENT, MAN SHFT (AC-DELCO #8642247)	97	F (M30)	1	8642247
64.		8.900	BOLT-HEX, M8X1.25X20, 16.88 THD, GM500 (10.9), PZOR, MACH (DTNT SPR TO VB) (AC-DELCO #11508687)	97		AR	11503687
65.		N.S.	SEAL, WRG HARN PASS-THRU CONN O-RING (PART OF 66)				
66.	6-M28	2.480	HARNESS, A/TRNS WRG (INCL 65, 67) (INCLS TCC SOL VLV) (AC-DELCO #15320476)	97	F (M30)	1	15320476
	6-A19	4.122	HARNESS, A/TRNS WRG (INCL 65, 67) (INCLS TCC SOL VLV) (2.480) (AC-DELCO #15320476)	97	F (M30)	1	15320476
67.		N.S.	SEAL, TCC SOL VLV (O RING) (PART OF 66)				
68.		8.900	BOLT, HEX M6X1X35 10.9 PC (TCC SOL VLV) (AC-DELCO #11503870)	97		AR	11503870
69.	6-B25	4.265	SWITCH, A/TRNS FLUID PRESS MAN VLV POSN (W/PLASTIC COVER) (AC-DELCO #24215111)	97	F (M30)	1	24215111
70.	6-B25	4.265	BOLT, A/TRNS FLUID PRESS MAN VLV POSN SW (M6X1X17.7) (AC-DELCO #8680764)	97	F (M30)	1	8680764
71.		N.S.	SEAL, A/TRNS FLUID FLTR (*KIT3)				
72.		N.S.	FILTER, A/TRNS FLUID (*KIT1, KIT2, KIT3)				
73.	6-B11	4.196	GASKET, A/TRNS FLUID PAN (ALSO PART OF 75) (*KIT1, KIT2, KIT3) (AC-DELCO #8654799)	97	F (M30)	1	8654799

cardiagn.com

						GM04-478F	
74.	6-B11	4.195	**MAGNET**, A/TRNS FLUID PAN (ALSO PART OF 75) (4.105) (AC-DELCO #8665830)	97	F (M30)	1	8665830
75.	6-B11	4.195	**PAN KIT**, A/TRNS FLUID (INCL 73, 74) (SHALLOW W/PAN, GSKT & MAGNET. DRAIN PLUG NOT INCLUDED) (AC-DELCO #8663948)	97	F (M30)	1	8663948
76.	6-B11	4.196	**BOLT**, A/TRNS FLUID PAN (M8X1.25X19, 16)	97	F (M30)	16	8657000
77.	6-B12	4.197	**BOLT**, FLUID PASG CVR (M6X1X17.7) (4.265) (AC-DELCO #8680764)	97	F (M30)	3	8680764
78.	6-C6	4.294	**PLUG**, PARK PAWL SHF HOLE (9.65MM DIA STEEL) (ALSO PART OF 79) (.38 DIA) (AC-DELCO #8620318)	97	F (M30)	1	8620318
79.	6-C6	4.294	**PAWL KIT**, PARK (INCLS 78, 81) (INST SHT, PAWL, PLUG & SHF) (AC-DELCO #8669911)	97	F (M30)	1	8669911
80.	6-C7	4.295	**SPRING**, PARK PAWL (AC-DELCO #8642193)	97	F (M30)	1	8642193
81.		N.S.	**PAWL**, PARK (PART OF 79)		.....		
82.	6-C6	4.282	**SEAL**, MAN SHFT SHF (ALSO PART OF 84) (*KIT1, KIT2) (AC-DELCO #8657163)	97	F (M30)	1	8657163
83.	6-C5	4.275	**RETAINER**, MAN SHFT SHF (AC-DELCO #8642246)	97	F (M30)	1	8642246
84.	6-C6	4.294	**SHAFT KIT**, MAN SHFT (INCL 82) (SHORT) (INCLS SEAL, INDIVIDUAL COMPONENT NOT SOLD SEPARATELY) (AC-DELCO #24210712)	97	F (M30)	1	24210712
	6-C6	4.294	**SHAFT KIT**, MAN SHFT (INCL 82) (128.2MM) (LONG) (INCLS SEAL) (AC-DELCO #24210711)	97	F (M30)	1	24210711
85.	6-C6	4.290	**ACTUATOR**, PARK PAWL (INCLS ACTUATOR, ROD & SPRINGS) (AC-DELCO #8667517)	97	F (M30)	1	8667517
86.	6-C6	4.290	**BRACKET**, PARK PAWL ACTR (AC-DELCO #8667574)	97	F (M30)	1	8667574
87.		8.900	**BOLT-HEX**, M8X1.25X20, 16.38 THD, GM500 (10.9), PZOR, MACH (PARK LOCK BRACKET TO CASE) (AC-DELCO #11508687)	97	.....	AR	11508687
88.	6-C6	4.279	**LEVER**, MAN SHFT DTNT (GOLD) (SQUARE HOLE) (AC-DELCO #8654106)	97	F (M30)	1	8654106
89.	6-C5	4.275	**LINK**, MAN VLV (*KIT1, KIT2) (AC-DELCO #8680731)	97	F (M30)	1	8680731
90.	6-C5	4.275	**NUT**, MAN SHFT DTNT LVR (M10X15 6H THD) (AC-DELCO #8648178)	97	F	1	8648178
91.		8.899	**BALL**, GRADE 2, STD DIA 1/4 (2), CHROME STL (NO. 10 CHECKBALL) (AC-DELCO #104918)	97	.....	AR	104918

cardiagn.com

93.	6-A22	4.133	STOP, TRANS FLUID LVL IND	97	F (M30)	1	8684890
95.		N.S.	FITTING, TRANS FLUID CLR PIPE (NOT REQ'D)	97	.....		
96.		N.S.	RETAINER, TRANS FLUID CLR PIPE FTG (NOT REQ'D)	97	.....		
97.		N.S.	PLUG, T/CV HSG ACC HOLE (NOT REQ'D)	97	.....		
98.		N.S.	PLUG, T/CV HSG ACC HOLE (NOT REQ'D)	97	.....		
99.	6-B13	4.224	ORIFICE, LUB FLUID (PART OF 8) (4.3MM DIA) (AC-DELCO #8663707)	97	F (M30)	1	8663707
103.	6-A16	4.103	CASE, A/TRNS (REMAN) (AC-DELCO #24212157)	97	F (LT1, M30)	1	24212157
	6-A16	4.103	CASE, A/TRNS (REMAN) (AC-DELCO #24212159)	97	F (L36, M30)	1	24212159
104.	6-B22	4.233	SPRING, 1-2 ACCUM PSTN (INNER) (AC-DELCO #8684431)	97	F (L36, M30)	1	8684431
	6-B22	4.233	SPRING, 1-2 ACCUM PSTN (ORANGE) (INNER) (AC-DELCO #8685655)	97	F (LT1, M30)	1	8685655
105.	6-B22	4.233	SPRING, 2-4 BAND SERVO PSTN CUSH INR (AC-DELCO #8681195)	97	F (LT1, M30)	1	8681195
110.	6-N20	2.559	BRACKET, ENG WRG HARN	97	F (LT1)	LH	12553341
377.		N.S.	VALVE, PRESS CONT SOL (*KIT10)		.....		

SERVICE KITS

	6-A9	4.003	TRANSMISSION, AUTO (GOODWRENCH REMAN) (CODE 7FCD)	97	F (L36, M30, GU6)	1	24207576
	6-A9	4.003	TRANSMISSION, AUTO (GOODWRENCH REMAN) (CODE 7FBD)	97	F (L36, M30, GU4)	1	24207577
	6-A9	4.003	TRANSMISSION, AUTO (GOODWRENCH REMAN) (CODE 7FFD)	97	F (LT1, M30)	1	24207578
1.	6-A12	4.005	GASKET KIT, A/TRNS SERV (INCL 2, 5, 6, 18-9, 21, 26-7, 30, 34, 44-5, 47, 52, 55-6, 72-3, 82, 89) (W/O PLATES OR PISTONS) (AC-DELCO #24201803)	97	F (M30)	1	24201803
2.		N.S.	TRANSMISSION KIT, AUTO (SERV OVERHAUL W/PLT, GSKT, SEAL) (USE 24201803 GASKET KIT T/W 24209562 PLATE KIT T/W 24204496 PISTON KIT.)		....		
3.	6-B12	4.197	FILTER KIT, A/TRNS FLUID (INCL 71-73) (USED W/SHALLOW PAN) (AC-DELCO #24200796) ..	97	F (M30)	1	24200796
4.	6-B25	4.265	GASKET KIT, C/VLV BODY SPCR PLT (INCL 47, 52) (AC-DELCO #8685951)	97	F (M30)	1	8685951

cardiagn.com

5.	6–B21	4.229	RING KIT, 2–4 BAND SERVO 2ND APPL PSTN FLUID SEAL (INCL 19) (.55 RATIO) (INCLS INR & OTR RING) (AC–DELCO #8642924)	97	F (M30)	1	8642924
	6–B21	4.229	RING KIT, 2–4 BAND SERVO 2ND APPL PSTN FLUID SEAL (INCL 18, 19) (.74 RATIO) (INCLS 2 RINGS) (AC–DELCO #8642925)	97	F (M30)	1	8642925
6.	6–B18	4.228	PISTON KIT, 1–2 & 3–4 ACCUM (INCL 44, 45, 55, 56) (W/RINGS & ALUM PISTONS) (AC–DELCO #24204496)	97	F (M30)	1	24204496
7.	6–B18	4.228	ACCUMULATOR, 1–2 (INCL 43, 54–7) (AC–DELCO #8684452)	97	F (L36, M30)	1	8684452
	6–B18	4.228	ACCUMULATOR, 1–2 (INCL 43, 54–7) (AC–DELCO #24201956)	97	F (LT1, M30)	1	24201956
8.	6–B16	4.228	PISTON KIT, 2–4 BAND SERVO 2ND APPLY (INCL 17, 18, 19) (YELLOW) (.74) (AC–DELCO #8642079)	97	F (LT1, M30)	1	8642079
	6–B18	4.228	PISTON KIT, 2–4 BAND SERVO 2ND APPLY (INCL 17, 18, 19) (W/RINGS) (AC–DELCO #8642613)	97	F (L36, M30)	1	8642613
10.	6–B25	4.265	VALVE KIT, PRESS CONT SOL (W/SHFT SOL VLV FLUID FLTR) (INCL 49, 50, 377) (AC–DELCO #24216254)	97	F (M30)	1	24216254

RPO DEFINITIONS

GU4 – AXLE,REAR,3 08 RATIO
GU6 – AXLE,REAR,3.42 RATIO
LT1 – ENGINE–GAS, 8 CYL, 5.7L(5.7P),MFI,HO
L36 – ENGINE GAS, 6 CYL, 3.8K, MFI, V6, HO (ERV6 SERIES)
M30 – TRANSMISSION,AUTOMATIC 4 SPEED,4L60E,ELECTRONIC

cardiagn.com

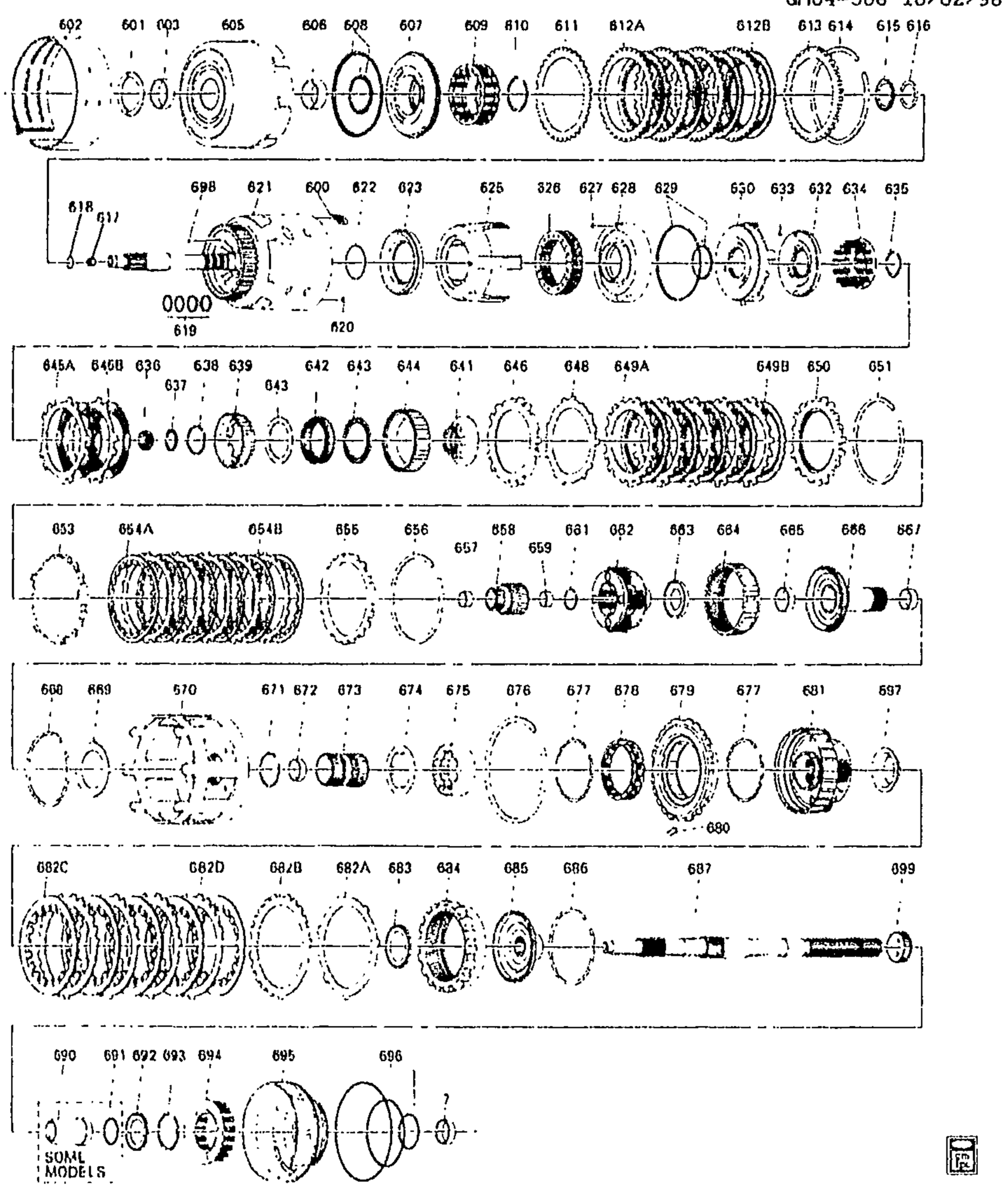

GM04-506F

1997-1998 F AUTOMATIC TRANSMISSION (M30) PART 2 (4L60E) CLUTCH GEARS

7.	6-N28	5.556	BUSHING, PROP SHF FRT SLIP YOKE (INSIDE DIA 1.506-1.509) (PART OF TRANS CASE) (4.104) (AC-DELCO #8680027)	97-98 F (M30)	1	8680027

cardiagn.com

			BOOST (INCLS RET & (2) SPRNGS) (*KIT7) (AC–DELCO #8667424)				
601.	6–B10	4.189	**WASHER**, REV INPUT CLU HSG THR (4.226) (AC–DELCO #08642041)	97–98	F (M30)	1	8642041
	6–B10	4.189	**WASHER**, REV INPUT CLU HSG THR (1.87–1.97MM) (4.158) (AC–DELCO #8642067)	97–98	F (M30)	1	8642067
	6–B10	4.189	**WASHER**, REV INPUT CLU HSG THR (2.04–2.14MM) (4.158) (AC–DELCO #8642068)	97–98	F (M30)	1	8642068
	6–B10	4.189	**WASHER**, REV INPUT CLU HSG THR (2.21–2.31MM) (4.158) (AC–DELCO #8642069)	97–98	F (M30)	1	8642069
	6–B10	4.189	**WASHER**, REV INPUT CLU HSG THR (2.38–2.48MM) (4.158) (AC–DELCO #8642070)	97–98	F (M30)	1	8642070
	6–B10	4.189	**WASHER**, REV INPUT CLU HSG THR (2.55–2.65MM) (4.158) (AC–DELCO #8642071)	97–98	F (M30)	1	8642071
	6–B10	4.189	**WASHER**, REV INPUT CLU HSG THR (2.72–2.82MM) (4.158) (AC–DELCO #8642072)	97–98	F (M30)	1	8642072
	6–B10	4.189	**WASHER**, REV INPUT CLU HSG THR (2.89–2.99MM) (4.158) (AC–DELCO #8642073)	97–98	F (M30)	1	8642073
	6–B10	4.189	**WASHER**, REV INPUT CLU HSG THR (3.06–3.16MM) (4.158) (AC–DELCO #8642074)	97–98	F (M30)	1	8642074
602.	6–B24	4.251	**BAND**, 2–4 (AC–DELCO #24201131)	97–98	F (M30)	1	24201131
603.	6–B9	4.180	**BUSHING**, REV INPUT CLU HSG FRT (ALSO PART OF 605) (AC–DELCO #8642905)	97–98	F (M30)	1	8642905
605.	6–B7	4.169	**HOUSING**, REV INPUT CLU (INCL 603, 606) (AC–DELCO #8681295)	97–98	F (M30)	1	8681295
606.	6–B7	4.169	**BUSHING**, DIR CLU HSG RR (ALSO PART OF 605) (AC–DELCO #8628917)	97–98	F (M30)	1	8628917
607.	6–B5	4.166	**PISTON**, REV INPUT CLU (.095 HOLE) (AC–DELCO #8667841) .	97–98	F (M30)	1	8667841
608.	6–B5	4.166	**SEAL KIT**, REV INPUT CLU (INCLS SEALS) (*KIT2, KIT3) (AC–DELCO #8657922)	97–98	F (M30)	1	8657922
609.	6–B5	4.164	**SPRING**, REV INPUT CLU (AC–DELCO #8647284)	97–98	F (M30)	1	8647284
610.	6–B5	4.164	**RING**, REV INPUT CLU SPR RET (*KIT4) (AC–DELCO #8628059) .	97–98	F (M30)	1	8628059
611.	6–A24	4.163	**PLATE**, REV INPUT CLU (WAVED) (AC–DELCO #8663074)	97–98	F (M30)	1	8663074
612.	6–A24	4.163	**PLATE**, REV INPUT CLU (ILLUSTRATED AS 612A) (153MM DIA) (*KIT8) (AC–DELCO #8673605)	97–98	F (M30)	4	8673605

cardiagn.com

			(ILLUSTRATED AS 612B) (W/ HOLES IN TURB PLATES) (AC–DELCO #24205267)				
613.	6–A24	4.163	**PLATE**, REV INPUT CLU BKG (7.25–7.41MM) (AC–DELCO #8682863)	97–98	F (M30)	1	8682863
	6–A24	4.163	**PLATE**, REV INPUT CLU BKG (6.52–6.68MM) (AC–DELCO #8682864)	97–98	F (M30)	1	8682864
	6–A24	4.163	**PLATE**, REV INPUT CLU BKG (5.79–5.95MM) (AC–DELCO #8682865)	97–98	F (M30)	1	8682865
614.	6–B5	4.164	**RING**, REV INPUT CLU BKG PLT RET (YELLOW) (AC–DELCO #8667022)	97–98	F (M30)	1	8667022
615.	6–A24	4.162	**BEARING**, REV INPUT CLU HSG THR (STATOR SHF) (TO SEL WA) (AC–DELCO #8642066)	97–98	F (M30)	1	8642066
616.	6–B10	4.189	**WASHER**, REV INPUT CLU HSG THR (4.226) (AC–DELCO #08642041)	97–98	F (M30)	1	8642041
	6–B10	4.189	**WASHER**, REV INPUT CLU HSG THR (1.87–1.97MM) (4.158) (AC–DELCO #8642067)	97–98	F (M30)	1	8642067
	6–B10	4.189	**WASHER**, REV INPUT CLU HSG THR (2.04–2.14MM) (4.158) (AC–DELCO #8642068)	97–98	F (M30)	1	8642068
	6–B10	4.189	**WASHER**, REV INPUT CLU HSG THR (2.21–2.31MM) (4.158) (AC–DELCO #8642069)	97–98	F (M30)	1	8642069
	6–B10	4.189	**WASHER**, REV INPUT CLU HSG THR (2.38–2.48MM) (4.158) (AC–DELCO #8642070)	97–98	F (M30)	1	8642070
	6–B10	4.189	**WASHER**, REV INPUT CLU HSG THR (2.55–2.65MM) (4.158) (AC–DELCO #8642071)	97–98	F (M30)	1	8642071
	6–B10	4.189	**WASHER**, REV INPUT CLU HSG THR (2.72–2.82MM) (4.158) (AC–DELCO #8642072)	97–98	F (M30)	1	8642072
	6–B10	4.189	**WASHER**, REV INPUT CLU HSG THR (2.89–2.99MM) (4.158) (AC–DELCO #8642073)	97–98	F (M30)	1	8642073
	6–B10	4.189	**WASHER**, REV INPUT CLU HSG THR (3.06–3.16MM) (4.158) (AC–DELCO #8642074)	97–98	F (M30)	1	8642074
617.	6–A20	4.123	**VALVE**, TURB SHF BALL CHK (PART OF 621) (AC–DELCO #8685839)	97–98	F (M30)	1	8685839
618.	6–A20	4.123	**SEAL**, TURB SHF (O RING) (*KIT2, KIT3) (AC–DELCO #8630049)	97	F (LT1, M30)	1	8630049
	6–A20	4.123	**SEAL**, TURB SHF (O RING) (*KIT2, KIT3) (AC–DELCO #24209815)	98	F (LS1, M30)	1	24209815

cardiagn.com

			SEL WA) (*KIT2, KIT3) (AC-DELCO #8662686)				
619.	6-A20	4.123	**RING**, INPUT SHF FLUID SEAL (TEFLON) (TEFLON) (*KIT2, KIT3) (AC-DELCO #8667035)	97-98	F (M30)	4	8667035
620.	6-A20	4.123	**VALVE**, 3-4 CLU HSG BALL CHK (ALSO PART OF 621) (AC-DELCO #24208262)	97-98	F (M30)	1	24208262
621.	6-A23	4.158	**HOUSING**, 3-4 CLU (W/INPUT SHF) (INCL 617, 620) (AC-DELCO #24200901)	97	F (LT1, M30)	1	24200901
	6-A23	4.158	**HOUSING**, 3-4 CLU (W/INPUT SHF) (INCL 617, 620) (AC-DELCO #24200902)	97-98	F (L36, M30)	1	24200902
	6-A23	4.158	**HOUSING**, 3-4 CLU (W/INPUT SHF) (INCL 617, 620) (AC-DELCO #24209840)	98	F (LS1, M30)	1	24209840
622.		N.S.	**SEAL**, O-RING INPUT TO FWD HSG (*KIT1, KIT2, KIT3)		.....		
623.	6-B5	4.166	**PISTON**, 3-4 CLU (AC-DELCO #24200290)	97-98	F (M30)	1	24200290
625.	6-B7	4.167	**RING**, 3-4 CLU APPL (1 BAR) (*KIT7) (AC-DELCO #8685043)	97-98	F (M30)	1	8685043
626.	6-B7	4.167	**SPRING**, 3-4 CLU (105.12MM O.D.) (AC-DELCO #8685244) ...	97-98	F (M30)	1	8685244
627.	6-A20	4.123	**VALVE**, FWD CLU HSG BALL CHK (ALSO PART OF 628) (SINGLE ORIFICE) (TALL & NARROW) (4.226) (AC-DELCO #8628732)	97-98	F (M30)	1	8628732
	6-A20	4.123	**VALVE**, FWD CLU HSG BALL CHK (ALSO PART OF 628) (SHORT & WIDE) (AC-DELCO #24205181)	97-98	F (M30)	1	24205181
628.	6-B7	4.169	**HOUSING**, FWD CLU (INCL 627) (INCLS HOUSINGS & VALVE) (AC-DELCO #24205298)	97-98	F (M30)	1	24205293
629.	6-B5	4.166	**SEAL**, FWD CLU PSTN OTR (*KIT1, KIT2, KIT3) (AC-DELCO #8686146)	97-98	F (M30)	1	8686146
		N.S.	**SEAL**, FWD CLU INR (*KIT1, KIT2, KIT3)		....		
630.	6-B5	4.166	**PISTON**, FWD CLU (*KIT11) (AC-DELCO #24205272)	97-98	F (M30)	1	24205272
632.	6-B5	4.166	**PISTON**, OVERRUN CLU (INCL 633) (STEEL W/ INTEGRAL SEAL) (*KIT11) (AC-DELCO #24205273)	97-98	F (M30)	1	24205273
633.		8.899	**BALL**, SPECIAL, 3/16 STEEL (ALSO PART OF 632) (AC-DELCO #7002117)	97-99	....	AR	7002117
634.	6-A24	4.163	**SPRING**, OVERRUN CLU (*KIT11) (AC-DELCO #24206085)	97-98	F (M30)	1	24206085
635.		8.934	**RING**, EXT SNAP FITS M38 DIA SHT .PL (*KIT4)	97-99	....	AR	11500692

cardiagn.com

636.	6-B8	4.176	SEAL, OUTPUT SHF (*KIT1, KIT2, KIT3) (AC-DELCO #8677268)	97-98	F (M30)	1	8677268
637.	6-A23	4.159	BEARING, INPUT SUN GR THR (AC-DELCO #8642162)	97-98	F (M30)	1	8642162
638.	6-B9	4.180	RING, OVERRUN CLU HUB RET (SNAP) (*KIT4, KIT11) (AC-DELCO #8647083)	97-98	F (M30)	1	8647083
639.		N.S.	HUB, OVERRUN CLU (*KIT11)				
641.		N.S.	RETAINER, FWD CLU SPRAG INR (*KIT11)				
642.		N.S.	CLUTCH, FWD RLR (*KIT11)				
643.		N.S.	RETAINER,				
644.		N.S.	RACE, FWD CLU SPRAG OTR (*KIT11)				
645.	6-A24	4.163	PLATE, OVERRUN CLU (ILLUSTRATED AS 645A) (1.93-2.13 THK) (GROOVED) (*KIT8) (AC-DELCO #8673253)	97	F (M30)	2	8673253
	6-A24	4.163	PLATE, OVERRUN CLU (ILLUSTRATED AS 645A) (1.93-2.13 THK) (GROOVED) (*KIT8) (AC-DELCO #24210766)	98	F (M30)	2	24210766
	6-A24	4.163	PLATE, OVERRUN CLU (ILLUSTRATED AS 645B) (2.34MM THK) (FLAT STEEL) (AC-DELCO #8642154)	97-98	F (M30)	2	8642154
646.	6-A24	4.163	PLATE, FWD CLU APPLY (AC-DELCO #8682866)	97-98	F (M30)	1	8682866
648.	6-A24	4.163	PLATE, FWD CLU (WAVED) (AC-DELCO #8647058)	97	F (LT1, M30)	1	8647058
	6-A24	4.163	PLATE, FWD CLU (WAVED) (AC-DELCO #24203903)	97-98	F (L36, M30, GU6)	1	24203903
	6-A24	4.163	PLATE, FWD CLU (WAVED) (AC-DELCO #8647058)	97-98	F (L36, M30, GU4)	1	8647058
	6-A24	4.163	PLATE, FWD CLU (WAVED) (AC-DELCO #8647058)	98	F (LS1, M30)	1	8647058
649.	6-A24	4.163	PLATE, FWD CLU (ILLUSTRATED AS 649A) (FIBER) (*KIT3, KIT5, KIT8) (AC-DELCO #8673254)	97-98	F (M30)	5	8673254
	6-A24	4.163	PLATE, FWD CLU (ILLUSTRATED AS 649B) (STEEL) (*KIT3, KIT5, KIT8) (AC-DELCO #8654325)	97-98	F (M30)	5	8654325
650.	6-A24	4.163	PLATE, FWD CLU BKG (6.92-7.07MM) (ID A) (AC-DELCO #8682867)	97-98	F (M30)	1	8682867
	6-A24	4.163	PLATE, FWD CLU BKG (8.73-9.03MM) (ID B) (AC-DELCO #8682868)	97-98	F (M30)	1	8682868
	6-A24	4.163	PLATE, FWD CLU BKG (4.56-4.71MM) (ID E) (AC-DELCO #8682871)	97-98	F (M30)	1	8682871
	6-A24	4.163	PLATE, FWD CLU BKG (7.55MM-7.85MM) (AC-DELCO #24212467)	97-98	F (M30)	1	24212467
	6-A24	4.163	PLATE, FWD CLU BKG (8.14MM-8.44MM) (AC-DELCO #24212468)	97-98	F (M30)	1	24212468

cardiagn.com

651.	6-A24	4.163	RING, FWD CLU BKG PLT RET (AC-DELCO #8642170)	97-98	F (M30)	1	8642170
653.	6-A24	4.163	PLATE, 3-4 CLU APPLY (*KIT7) (AC-DELCO #8685044)	97-98	F (M30)	1	8685044
654.	6-A24	4.163	PLATE KIT, CLU (3-4 CLUTCH STEEL & FIBER) (*KIT3, KIT7, KIT8) (AC-DELCO #24209563)	97-98	F (M30)	1	24209563
655.	6-A24	4.163	PLATE, 3-4 CLU BKG (ID BY 3 DIMPLES) (*KIT7) (AC-DELCO #8685046)	97-98	F (M30)	1	8685046
	6-A24	4.163	PLATE, 3-4 CLU BKG (3.90MM-4.10MM) (*KIT7) (AC-DELCO #24212459)	97-98	F (M30)	1	24212459
	6-A24	4.163	PLATE, 3-4 CLU BKG (SELECTIVE) (4.79-4.99MM THK) (*KIT7) (AC-DELCO #24211896)	97-98	F (M30)	1	24211896
656.	6-A24	4.163	RING, 3-4 CLU BKG PLT RET (AC-DELCO #8663636)	97-98	F (M30)	1	8663636
657.	6-A23	4.159	BUSHING, INPUT SUN GR FRT (FRT) (FRT & RR) (AC-DELCO #8642181)	97-98	F (M30)	2	8642181
658.	6-A23	4.159	GEAR, INPUT SUN (INCL 657, 659) (AC-DELCO #24213007)	97-98	F (M30)	1	24213007
659.	6-A23	4.159	BUSHING, INPUT SUN GR FRT (REAR) (FRT & RR) (*KIT11) (AC-DELCO #8642181)	97-98	F (M30)	2	8642181
661.	6-B8	4.176	RING, OUTPUT SHF RET (TO INPUT CARR) (*KIT2, KIT3, KIT4) (AC-DELCO #8654141)	97-98	F (M30)	1	8654141
662.	6-B8	4.175	CARRIER, INPUT (COMPL) (AC-DELCO #24212177)	97-98	F (M30)	1	24212177
663.	6-A23	4.159	BEARING, INT REACTION GR SUPT THR (AC-DELCO #8642191)	97-98	F (M30)	1	8642191
664.	6-A23	4.158	GEAR, INPUT INTL (AC-DELCO #8663639)	97-98	F (M30)	1	8663639
665.	6-B8	4.176	BUSHING, REACTION CARR SHF FRT (ALSO PART OF 666) (AC-DELCO #8642908)	97-98	F (M30)	1	8642908
666.	6-B8	4.175	SHAFT, REACTION CARR (INCL 665, 667) (AC-DELCO #8681518)	97-98	F (M30)	1	8681518
667.	6-B8	4.176	BUSHING, REACTION CARR SHF RR (ALSO PART OF 666) (AC-DELCO #8642907)	97-98	F (M30)	1	8642907
668.	6-B8	4.176	RING, REACTION CARR SHF RET (TO INT GR) (AC-DELCO #8642201)	97-98	F (M30)	1	8642201
669.	6-B8	4.176	WASHER, REACTION CARR SHF THR (TO SHELL) (08642202 TO BE USED ONLY WITH 08683439) (AC-DELCO #8642202)	97-98	F (M30)	1	8642202
670.	6-B8	4.175	SHELL, REACTION SUN GR (AC-DELCO #8683439)	97-98	F (M30)	1	8683439
671.	6-A23	4.159	RING, REACTION SUN GR RET (AC-DELCO #8681553)	97-98	F (M30)	1	8681553

cardiagn.com

672.	6-B8	4.176	**BUSHING**, REACTION SUN GR (ALSO PART OF 673) (AC-DELCO #8642909)	97-98	F (M30)	1	8642909
673.	6-A23	4.159	**GEAR**, REACTION SUN (INCL 672) (INCLS BUSH & GEAR) (INDIVIDUAL COMPONENTS NOT SOLD SEPARATELY) (AC-DELCO #8642204)	97-98	F (M30)	1	8642204
674.	6-A23	4.159	**WASHER**, REACTION SUN GR SHELL THR (4.176) (AC-DELCO #8642331)	97-98	F (M30)	1	8642331
675.	6-B9	4.180	**RACE**, LOW CLU RLR INR (PART OF 679) (AC-DELCO #8673300)	97-98	F (M30)	1	8673300
676.	6-B9	4.180	**RING**, LOW & REV CLU SUPT RET (AC-DELCO #24200278) ..	97-98	F (M30)	1	24200278
677.	6-B9	4.180	**RING**, LOW CLU RLR RET (OVERRUN) (PART OF 679) (AC-DELCO #6261051)	97-98	F (M30)	2	6261051
678.	6-B9	4.180	**ROLLER**, LOW CLU (PART OF 679) (*KIT6) (AC-DELCO #7471008)	97-98	F (M30)	1	7471008
679.	6-B5	4.166	**SUPPORT**, LOW & REV CLU (INCL 675, 677, 678) (*KIT6) (4.180) (AC-DELCO #8681727) .	97-98	F (M30)	1	8681727
680.	6-B9	4.180	**SPRING**, LOW & REV CLU SUPT (RET) (AC-DELCO #6261415) ..	97-98	F (M30)	1	6261415
681.	6-B8	4.175	**CARRIER**, REACTION (W/DEFLECTOR) (HI-SPEED) (INCL 697) (AC-DELCO #8654200)	97-98	F (M30)	1	8654200
682.	6-A24	4.163	**PLATE**, LOW & REV CLU (WAVED) (ILLUSTRATED AS 682A) (*KIT3, KIT6) (AC-DELCO #8676362)	97-98	F (M30)	1	8676362
	6-A24	4.163	**PLATE**, LOW & REV CLU (ILLUSTRATED AS 682B) (1.829MM) (HAS HOLES IN TURB PLATES) (STEEL) (*KIT3, KIT6) (AC-DELCO #24205268)	97-98	F (M30)	5	24205268
	6-A24	4.163	**PLATE**, LOW & REV CLU (ILLUSTRATED AS 682B) (2.344MM) (HAS HOLES IN TURB PLATES) (*KIT3, KIT6) (AC-DELCO #24205270)	97-98	F (M30)	1	24205270
	6-A24	4.163	**PLATE**, LOW & REV CLU (ILLUSTRATED AS 682B) (1.314MM) (HAS HOLES IN TURB PLATES) (*KIT3, KIT6) (AC-DELCO #24205269)	97-98	F (M30)	1	24205260
	6-A24	4.163	**PLATE**, LOW & REV CLU (FLAT FACED) (ILLUSTRATED AS 682C) (NON-SEGMENTED COMPLETE SET OF 5) (*KIT3, KIT6, KIT8) (AC-DELCO #8684089)	97-98	F (M30)	5	8684089

cardiagn.com

	6–A24	4.163	**PLATE**, LOW & REV CLU (ILLUSTRATED AS 682D) (1.829MM) (HAS HOLES IN TURB PLATES) (STEEL) (*KIT3, KIT6) (AC–DELCO #24205268)	97–98	F (M30)	AR	24205268
683.	6–A23	4.159	**BEARING**, REACTION CARR THR (4.176) (AC–DELCO #8642215)	97–98	F (M30)	1	8642215
	6–A23	4.159	**BEARING**, DIFF CARR SUN GR THR (AC–DELCO #8646254) ...	97–98	F (M30)	1	8646254
684.	6–A23	4.159	**GEAR**, REACTION INTL (AC–DELCO #8667055)	97–98	F (M30)	1	8667055
685.	6–B8	4.175	**SUPPORT**, REACTION INTL GR (AC–DELCO #8681491)	97–98	F (M30)	1	8681491
686.	6–B8	4.176	**RING**, INT REACTION GR SUPT RET (AC–DELCO #8642220) ...	97–98	F (M30)	1	8642220
687.	6–B8	4.175	**SHAFT**, OUTPUT (AC–DELCO #8683817)	97–98	F (M30)	1	8683817
690.		N.S.	**SLEEVE**, OUTPUT SHF (NOT REQD)		.....		
691.		N.S.	**SEAL**, OUTPUT SHF (NOT REQ'D) (*KIT2, KIT3)		.....		
692.	6–A23	4.159	**BEARING**, REACTION CARR THR (AC–DELCO #8642191) ...	97–98	F (M30)	1	8642191
693.	6–B5	4.164	**RING**, LOW & REV CLU SPR RET RET (*KIT4, KIT6) (4.159) (AC–DELCO #8647337)	97–98	F (M30)	1	8647337
694.	6–B5	4.164	**SPRING**, LOW & REV CLU (AC–DELCO #8642227)	97–98	F (M30)	1	8642227
695.	6–B5	4.166	**PISTON**, LOW & REV CLU (*KIT6) (AC–DELCO #8685549) .	97–98	F (M30)	1	8685549
696.	6–B10	4.189	**SEAL KIT**, LOW & REV CLU (INCLS INR, OTR & INTER SEALS) (*KIT2, KIT3, KIT6) (4.166) (AC–DELCO #8648987)	97–98	F (M30)	1	8648987
697.		N.S.	**DEFLECTOR**, OIL (PART OF 681)		.....		
698.	6–B13	4.224	**ORIFICE**, LUB FLUID (4.3MM DIA) (AC–DELCO #8663707) ...	97–98	F (M30)	1	8663707
699.	6–C11	4.343	**WHEEL**, VEH SPD SEN RELUCTOR (AC–DELCO #24202711)	97–98	F (M30)	1	24202711

SERVICE KITS

1.	6–B5	4.166	**SEAL KIT**, 3–4 CLU PSTN (FOA) (INCL 622, 624, 629, 631, 636) (AC–DELCO #8642919)	97–98	F (M30)	1	8642919
2.	6–A12	4.005	**GASKET KIT**, A/TRNS SERV (INCL 608, 618–19, 622, 624, 629, 631, 636, 661, 691, 696) (W/O PLATES OR PISTONS) (AC–DELCO #24201803)	97–98	F (M30)	1	24201803
3.		N.S.	**TRANSMISSION KIT**, AUTO (SERV OVERHAUL W/PLT, GSKT, SEAL) (USE 24201803 GASKET KIT T/W 24209562 PLATE KIT T/W 24204496 PISTON KIT.)		....		

cardiagn.com

4.	6–A12	4.005	RING KIT, RET (INCL 610, 635, 638, 661, 693) (AC–DELCO #8642910)	97–98	F (M30)	1	8642910
5.	6–A24	4.163	PLATE KIT, FWD CLU (INCL 649, 702) (INCLS INST SHEET & PLATES) (AC–DELCO #8647991)	97–98	F (M30)	1	8647991
6.	6–A24	4.163	PLATE KIT, LOW & REV CLU (W/SUPT) (W/PSTN) (INCL 675, 677–9, 682, 693, 695–6) (STEEL PLATES) (AC–DELCO #8687996)	97–98	F (M30)	1	8687996
7.	6–A24	4.163	PLATE KIT, 3–4 CLU (INCL 600, 625, 653, 654, 655B) (AC–DELCO #24209032)	97–98	F (M30)	1	24209032
8.	6–A24	4.163	PLATE KIT, CLU ((INCLS 612A, 645A, 649, 654A, 682C)) (HAS FIBER PLTS) (AC –DELCO #24209031)	97–98	F (M30)	1	24209031
10.	6–B5	4.166	PISTON KIT, FWD CLU & OVERRUN CLU (INCL 630, 632, 634) (AC–DELCO #24209542) ..	97–98	F (M30)	1	24209542
11.	6–B5	4.164	CLUTCH, FWD RLR (INCL 638, 639, 641, 644, 657, 658) (HIGH SPD, INCLS INPUT SUN GEAR) (AC–DELCO #24210960)	97–98	F (M30)	1	24210960
	6–B5	4.164	CLUTCH, FWD RLR (INCL 638, 639, 641, 644, 657, 658) (REG SPD, INCLS INPUT SUN GEAR) (AC–DELCO #24210961)	97–98	F (M30)	1	24210961

RPO DEFINITIONS

GU4 – AXLE,REAR,3.08 RATIO
GU6 – AXLE,REAR,3.42 RATIO
LS1 – ENGINE GAS, 8 CYL, 5.7L, SFI, ALUMINUM ENGINE
LT1 – ENGINE–GAS, 8 CYL, 5.7L(5.7P),MFI,HO
L36 – ENGINE GAS, 6 CYL, 3.8K, MFI, V6, HO (ERV6 SERIES)
M30 – TRANSMISSION,AUTOMATIC 4 SPEED,4L60E,ELECTRONIC

cardiagn.com

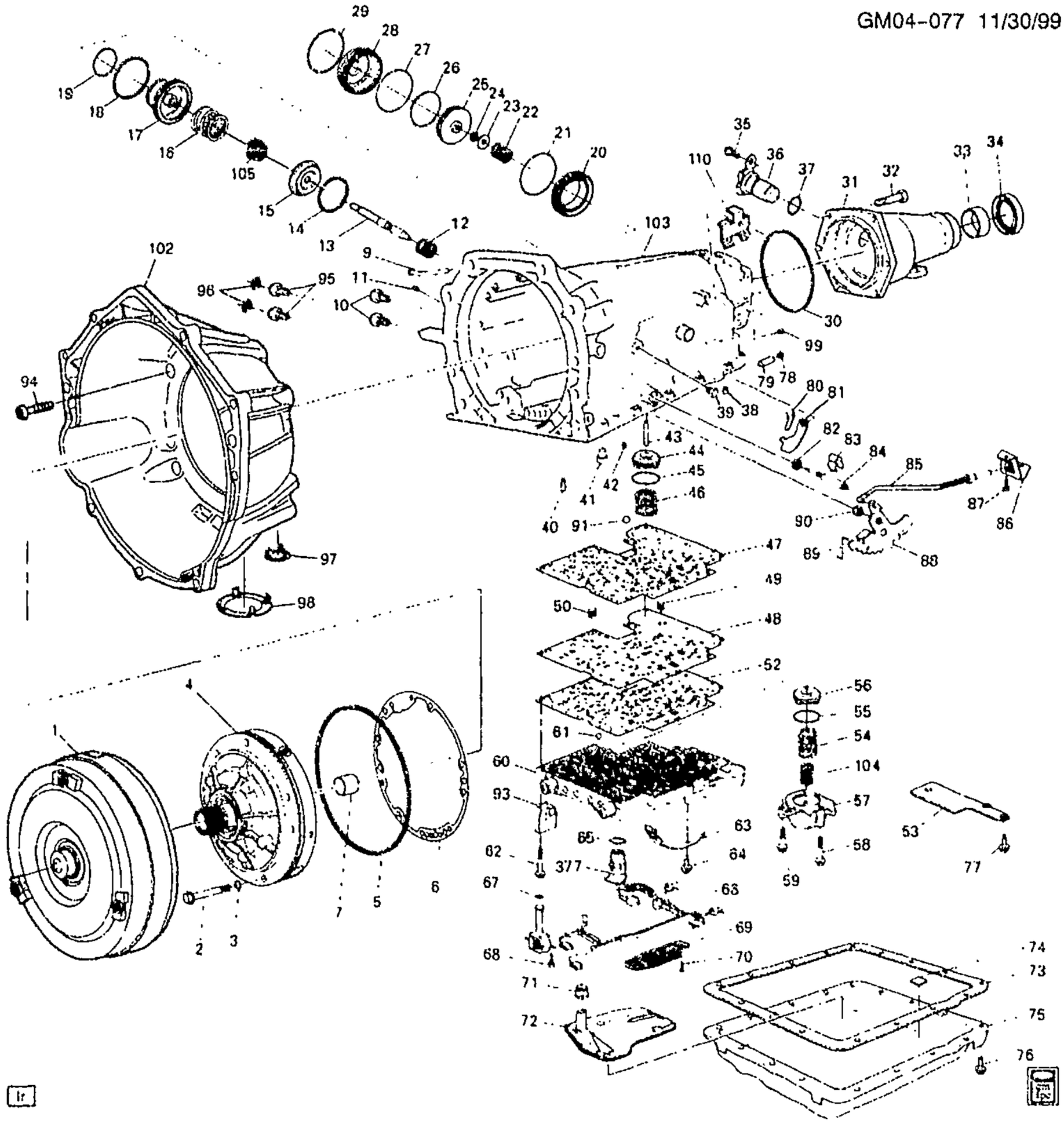

GM04-077F

1998-2002 F AUTOMATIC TRANSMISSION (M30) PART 1 (4L60E) CASE & RELATED PARTS/PARK LOCK LINKAGE

1.	6-A17	4.115	CONVERTER, TORQ (REMAN) (CODE TMAX)	98-02	F (LS1, M30)	1	24210919
	6-A17	4.115	CONVERTER, TORQ (REMAN) (CODE HLHD)	98	F (L36, M30, GU6)	1	24210917
	6-A17	4.115	CONVERTER, TORQ (REMAN)	99-02	F (L36, M30, GU6)	1	24213395

cardiagn.com

	6–A17	4.115	CONVERTER, TORQ (REMAN) (CODE HYHD)	98	F (L36, M30, GU4)	1	24210916
	6–A17	4.115	CONVERTER, TORQ (REMAN) (CODE HYQD)	99–02	F (L36, M30, GU4)	1	24213396
2.	6–B17	4.226	BOLT, A/TRNS FLUID PUMP (M8X1.25X60) (INCLS SEAL) (*KIT1, KIT2) (AC–DELCO #24210819)	98–02	F (M30)	7	24210819
3.	6–B17	4.226	SEAL, A/TRNS FLUID PUMP BOLT (AC–DELCO #12337996)	98–02	F (M30)	7	12337996
4.		N.S.	PUMP, A/TRNS OIL (SEE PUMP ILLUSTRATION)				
5.	6–B17	4.226	SEAL, A/TRNS FLUID PUMP (*KIT1, KIT2) (AC–DELCO #24210605)	98–02	F (M30)	1	24210605
6.	6–B17	4.226	GASKET, A/TRNS FLUID PUMP (TO CASE) (*KIT1, KIT2) (AC–DELCO #12337931)	98–02	F (M30)	1	12337931
7.	6–N28	5.556	BUSHING, PROP SHF FRT SLIP YOKE (ALSO PART OF 8) (INSIDE DIA 1.506–1.509) (PART OF TRANS CASE) (4.104) (AC–DELCO #8680027)	98–02	F (M30)	1	8680027
9.	6–A16	4.104	PIPE, A/TRNS VENT (*KIT10)	98–02	F (M30)	1	24202440
10.	6–A21	4.128	FITTING, TRANS FLUID CLR PIPE (5/16) (AC–DELCO #8637742)	98	F (M30)	2	8637742
11.	6–A17	4.105	ORIFICE, FWD CLU FEED (6.4MM DIA) (NO DIMPLE) (*KIT10) (4.104) (AC–DELCO #8628864)	98–02	F (M30)	1	8628864
12.	6–B22	4.233	SPRING, 2–4 BAND SERVO RTN (ORANGE) (AC–DELCO #8642273)	98–02	F (M30)	1	8642273
13.	6–B24	4.246	PIN, 2–4 BAND SERVO PSTN (I.D BY 1 GROOVE IN TAPPERED POINT) (4.228) (AC–DELCO #8680499)	98–02	F (M30)	1	8680499
	6–B24	4.246	PIN, 2–4 BAND SERVO PSTN (I.D BY 2 GROOVES IN TAPERED POINT) (4.228) (AC–DELCO #8680500)	98–02	F (M30)	1	8680500
	6–B24	4.246	PIN, 2–4 BAND SERVO PSTN (I.D BY NO GROOVES IN TAPPERED POINT) (4.228) (AC–DELCO #8680501)	98–02	F (M30)	1	8680501
14.	6–B8	4.176	RING, 2–4 BAND SERVO 2ND APPL PSTN RET (AC–DELCO #8642105)	98–02	F (M30)	1	8642105
15.	6–B22	4.233	RETAINER, 2–4 BAND SERVO CUSH SPR (AC–DELCO #8642416)	98–02	F (M30)	1	8642416
16.	6–B22	4.233	SPRING, 2–4 BAND SERVO PSTN CUSH (PINK) (AC–DELCO #8642539) (PINK 140 LBS)	98–02	F (M30)	1	8642539
17.		N.S.	PISTON, 2–4 BAND SERVO 2ND APPLY (*KIT8)				

cardiagn.com

18.		N.S.	RING, LOW & REV ACCUM PSTN OTR FLUID SEAL (*KIT1, KIT2, KIT5, KIT8)				
19.		N.S.	RING, LOW & REV ACCUM PSTN INR FLUID SEAL (*KIT1, KIT2, KIT5, KIT8)				
20.	6-B18	4.228	HOUSING, 2-4 BAND SERVO 2ND APPL (SERVO PISTON) (INNER) (.55) (AC-DELCO #8673041)	98-02	F (L36, M30)	1	8673041
	6-B18	4.228	HOUSING, 2-4 BAND SERVO 2ND APPL (SERVO PISTON) (INNER) (AC-DELCO #8673039)	98-02	F (LS1, M30)	1	8673039
21.	6-B21	4.229	SEAL, 2-4 BAND SERVO 2ND APPL PSTN HSG (O RING) (*KIT1, KIT2) (AC-DELCO #8642112)	98-99	F (M30)	1	8642112
	6-B21	4.229	SEAL, 2-4 BAND SERVO 2ND APPL PSTN HSG (O RING) (*KIT1, KIT2) (AC-DELCO #24208661)	00-02	F (M30)	1	24208661
22.	6-B24	4.246	SPRING, 2-4 BAND SERVO PSTN (AC-DELCO #24207758)	98-02	F (M30)	1	24207758
23.	6-B22	4.233	WASHER, 2-4 BAND SERVO PIN (3/8) (AC-DELCO #8642107)	98-02	F (M30)	1	8642107
24.		8.934	RETAINER, SNAP RING BOWED EXT .FITS SHFT 7/16 PL (OUTPUT SHF) (AC-DELCO #9415640)	98-02		AR	9415640
25.	6-B18	4.228	PISTON, 2-4 BAND SERVO 4TH APPLY (W/RING) (AC-DELCO #8642478)	98-02	F (M30)	1	8642478
26.	6-B21	4.229	RING, 2-4 BAND SERVO PSTN FLUID SEAL (*KIT1, KIT2) (AC-DELCO #8642480)	98-02	F (M30)	1	8642480
27.	6-B21	4.229	SEAL, 2-4 BAND SERVO CVR (O RING) (ALSO PART OF 28) (*KIT1, KIT2) (AC-DELCO #8647351)	98-02	F (M30)	1	8647351
28.	6-B18	4.228	COVER, 2-4 SERVO (W/SEAL) (INCL 27) (INCLS RING) (4.241) (AC-DELCO #8642979)	98-02	F (M30)	1	8642979
29.	6-B18	4.228	RING, 2-4 BAND SERVO CVR RET (AC-DELCO #8642124)	98-02	F (M30)	1	8642124
30.	6-C7	4.318	SEAL, A/TRNS CASE EXTN (*KIT1, KIT2) (AC-DELCO #24208660)	98-02	F (M30)	1	24208660
31.	6-C7	4.317	EXTENSION, A/TRNS CASE (INCLUDES 33, 34) (INCLS SEAL & BUSHING) (AC-DELCO #24209544)	98-02	F (M30)	1	24209544
32.		8.900	BOLT, M10X1.5X27 (EXTN TO CASE)	98-02		AR	11503428

cardiagram.com

33.	6-N28	5.556	**BUSHING**, PROP SHF FRT SLIP YOKE (ALSO PART OF 31) (INSIDE DIAM 1.506- 1.504 (PT OF TRANS EXT) (AC-DELCO #24207915)	98-02	F (M30)	1	24207915
34.	6-C7	4.318	**SEAL**, PROP SHF FRT SLIP YOKE OIL (ALSO PART OF 31) (NON-BOOTED) (*KIT1, KIT2)	98-02	F (M30)	1	24204540
35.	6-C8	4.329	**BOLT**, VEH SPD SEN (M6X1.0X15.0) (AC-DELCO #24200093)	98-02	F (M30)	1	24200093
36.	6-C8	4.329	**SENSOR**, VEH SPD (INCL 37) (AC-DELCO #213-328)	98-02	F (M30)	1	10456520
37.	6-C11	4.338	**SEAL**, VEH SPD SEN (O RING) (PART OF 36) (AC-DELCO #10475299)	98-02	F (M30)	1	10475299
38.	6-A17	4.105	**ORIFICE**, 3RD ACCUM BL (6.4MM DIA) (NO DIMPLE) (*KIT10) (4.104) (AC-DELCO #8628864)	98-02	F (M30)	1	8628864
39.		8.971	**PLUG**, 1/8 NPTF (OIL PRESS TEST HOLE) (AC-DELCO #444613)	98-02		1	444613
40.	6-B18	4.228	**VALVE**, 3RD ACCUM BALL CHK (W/BALL) (*KIT10) (AC-DELCO #8634400)	98-02	F (M30)	1	8634400
41.	6-B21	4.229	**PIN**, 2-4 BAND ANC (AC-DELCO #8654581)	98-02	F (M30)	1	8654581
42.	6-B9	4.180	**VALVE**, A/TRNS FLUID/PUMP CVR BALL CHK (DOUBLE ORIFICE) (W/BALL) (*KIT10) (AC-DELCO #8663890)	98-02	F (M30)	3	8663890
43.	6-B18	4.228	**PIN**, 3-4 ACCUM PSTN (4.226) (AC-DELCO #8628273)	98-02	F (M30)	1	8628273
44.	6-B18	4.228	**PISTON**, 3-4 ACCUM (*KIT6) (AC-DELCO #8663608)	98	F (M30)	1	8663608
		N.S.	**PISTON**, 3-4 ACCUM (AVAILABLE IN KIT ONLY FROM 1999 & FORWARD) (*KIT6)				
45.	6-B21	4.229	**RING**, 3-4 ACCUM PSTN FLUID SEAL (*KIT1, KIT2, KIT6) (AC-DELCO #24206509)	98-02	F (M30)	1	24206509
46.	6-B22	4.233	**SPRING**, 3-4 ACCUM PSTN (BLUE) (AC-DELCO #8639074)	98-02	F (M30)	1	8639074
47.		N.S.	**GASKET**, C/VLV BODY (*KIT1, KIT2, KIT4)				
48.	6-B25	4.265	**PLATE**, C/VLV BODY SPCR (AC-DELCO #24203951)	98-01	F (L36, M30)	1	24203951
	6-B25	4.265	**PLATE**, C/VLV BODY SPCR (AC-DELCO #24203953) (BUILT ON JULIAN DATE 00-352 & PRIOR)	98-01	F (LS1, M30)	1	24203953
	6-B25	4.265	**PLATE**, C/VLV BODY SPCR (AC-DELCO #24218160) (BUILT ON JULIAN DATE 00-353 & FUTURE)	01-02	F (L36, M30)	1	24218160

cardiagn.com

	6-B25	4.265	PLATE, C/VLV BODY SPCR (AC-DELCO #24218161) (BUILT ON JULIAN DATE 00-353 & FUTURE)	01-02	F (LS1, M30)	1	24218161
49.	6-B25	4.265	FILTER, SHFT SOL VLV FLUID (AC-DELCO #24209144)	98-02	F (M30)	1	24209144
50.	6-B25	4.265	FILTER, PRESS CONT SOL VLV FLUID (AC-DELCO #24209145)	98-02	F (M30)	1	24209145
52.		N.S.	GASKET, C/VLV BODY SPCR PLT (*KIT1, KIT2, KIT4)				
53.	6-B12	4.197	COVER, A/TRNS CASE FLUID PASG (4.265) (AC-DELCO #8682792)	98-02	F (M30)	1	8682792
54.	6-B22	4.233	SPRING, 1-2 ACCUM PSTN (VIOLET) (OTR) (*KIT7) (AC-DELCO #24209794)	98-02	F (M30)	1	24209794
55.	6-B21	4.229	RING, 1-2 ACCUM PSTN FLUID SEAL (*KIT1, KIT6, KIT7) (AC-DELCO #24206509)	98-02	F (M30)	1	24206509
56.		N.S.	PISTON, 1-2 ACCUM (*KIT1, KIT2, KIT6, KIT7)				
57.	6-B18	4.228	COVER, 1-2 ACCUM (INCLS PIN) (*KIT7) (AC-DELCO #8686084)	98-00	F (M30)	1	8686084
	6-B18	4.228	COVER, 1-2 ACCUM (INCLS PIN) (*KIT7) (AC-DELCO #24219935)	01-02	F (M30)	1	24219935
	6-B18	4.228	PIN, 1-2 ACCUM PSTN (PART OF COVER) (*KIT7) (4.226) (AC-DELCO #8684426)	98-02	F (M30)	1	8684426
58.		8.900	BOLT, HFH M6X1X65 9.8 PL	98-02		AR	11506078
59.		8.900	BOLT, HEX M6X1X35 10.9 PC (ACCUM CVR TO CASE) (AC-DELCO #11503870)	98-02		AR	11503870
		8.929	WASHER, FLAT 5/16X5/8X1/16 ZP HARD	98-02		AR	2436162
60.	6-B25	4.265	VALVE, CONT (W/BODY & VLV) (REMAN) (AC-DELCO #24214879)	98-99	F (L36, M30)	1	24214879
	6-B25	4.265	VALVE, CONT (W/BODY & VLV) (REMAN) (AC-DELCO #24214880)	98-99	F (LS1, M30)	1	24214880
	6-B25	4.265	VALVE, CONT (W/BODY & VLV) (AC-DELCO #24210317)	00	F (LS1, M30)	1	24210317
	6-B25	4.265	VALVE, CONT (W/BODY & VLV) (AC-DELCO #24210322)	00	F (L36, M30)	1	24210322
	6-B25	4.265	VALVE, CONT (W/BODY & VLV) (AC-DELCO #24218186) (BUILT ON JULIAN DATE 01-032 & FUTURE)	01-02	F (LS1, M30)	1	24218186
	6-B25	4.265	VALVE, CONT (W/BODY & VLV) (AC-DELCO #24218189) (BUILT ON JULIAN DATE 01-032 & FUTURE)	01-02	F (L36, M30)	1	24218189
	6-B25	4.265	VALVE, CONT (W/BODY & VLV) (AC-DELCO #24218826) (BUILT ON JULIAN DATE 01-031 &	01	F (L36, M30)	1	24218826

cardiagn.com

61.		8.899	**BALL**, GRADE 2, STD DIA 1/4 (2), CHROME STL (AC-DELCO #104918)	98-02		AR	104918
62.	6-B25	4.265	**BOLT**, VLV BODY (M6X1X54.4) (AC-DELCO #8680741)	98-02	F (M30)	3	8680741
	6-B25	4.265	**BOLT**, VLV BODY (M6X1X47.5) (AC-DELCO #8680742)	98-02	F (M30)	9	8680742
	6-B25	4.265	**BOLT**, VLV BODY (M6X1X35) (8.900) (AC-DELCO #11503870)	98-02	F (M30)	2	11503870
	6-B25	4.265	**BOLT**, VLV BODY (M6X1X65) (8.900)	98-02	F (M30)	3	11506078
63.	6-C5	4.275	**DETENT**, MAN SHFT (AC-DELCO #8642247)	98-02	F (M30)	1	8642247
64.		8.900	**BOLT-HEX**, M8X1.25X20, 16.88 THD, GM500 (10.9), PZOR, MACH (DTNT SPR TO VB) (AC-DELCO #11508687)	98-02		AR	11508687
65.		N.S.	**SEAL**, WRG HARN PASS-THRU CONN O-RING (PART OF 66)				
66.	6-M28	2.480	**HARNESS**, A/TRNS WRG (INCL 65, 67) (INCLS TCC SOL VLV) (AC-DELCO #15320476)	98-01	F (M30)	1	15320476
	6-A19	4.122	**HARNESS**, A/TRNS WRG (INCL 65, 67) (INCLS TCC SOL VLV) (2.480) (AC-DELCO #15320476)	98-02	F (M30)	1	15320476
67.		N.S.	**SEAL**, TCC SOL VLV (O RING) (PART OF 66)				
68.		8.900	**BOLT**, HEX M6X1X35 10 9 PC (TCC SOL VLV) (AC-DELCO #11503870)	98-02		AR	11503870
69.	6-B25	4.265	**SWITCH**, A/TRNS FLUID PRESS MAN VLV POSN (W/PLASTIC COVER) (AC-DELCO #24215111)	98-02	F (M30)	1	24215111
70.	6-B25	4.265	**BOLT**, A/TRNS FLUID PRESS MAN VLV POSN SW (M6X1X17.7) (AC-DELCO #8680764)	98-02	F (M30)	1	8680764
71.		N.S.	**SEAL**, A/TRNS FLUID FLTR (*KIT3)				
72.		N.S.	**FILTER**, A/TRNS FLUID (*KIT1, KIT2, KIT3)				
73.	6-B11	4.196	**GASKET**, A/TRNS FLUID PAN (ALSO PART OF 75) (*KIT1, KIT2, KIT3) (AC-DELCO #8654799)	98-02	F (M30)	1	8654799
74.	6-B11	4.195	**MAGNET**, A/TRNS FLUID PAN (ALSO PART OF 75) (4.105) (AC-DELCO #8665830)	98-02	F (M30)	1	8665830
75.	6-B11	4.195	**PAN KIT**, A/TRNS FLUID (INCL 73, 74) (SHALLOW W/PAN, GSKT & MAGNET, DRAIN PLUG NOT INCLUDED) (AC-DELCO #8663948)	98-02	F (M30)	1	8663948
76.	6-B11	4.196	**BOLT**, A/TRNS FLUID PAN (M8X1.25X19, 16)	98-02	F (M30)	16	8657000
77.	6-B12	4.197	**BOLT**, FLUID PASG CVR (M6X1X17.7) (4.265) (AC-DELCO #8680764)	98-02	F (M30)	3	8680764

cardiagn.com

78.	6-C6	4.294	**PLUG**, PARK PAWL SHF HOLE (9.65MM DIA STEEL) (ALSO PART OF 79) (.38 DIA) (AC-DELCO #8620318)	98-02	F (M30)	1	8620318
79.	6-C6	4.294	**PAWL KIT**, PARK (INCLS 78, 81) (INST SHT, PAWL, PLUG & SHF) (AC-DELCO #8669911)	98-02	F (M30)	1	8669911
80.	6-C7	4.295	**SPRING**, PARK PAWL (AC-DELCO #8642193)	98-02	F (M30)	1	8642193
81.		N.S.	**PAWL**, PARK (PART OF 79)		.....		
82.	6-C6	4.282	**SEAL**, MAN SHFT SHF (ALSO PART OF 84) (*KIT1, KIT2, KIT10) (AC-DELCO #8657163)	98-02	F (M30)	1	8657163
83.	6-C5	4.275	**RETAINER**, MAN SHFT SHF (AC-DELCO #8642246)	98-02	F (M30)	1	8642246
84.	6-C6	4.294	**SHAFT KIT**, MAN SHFT (INCL 82) (SHORT) (INCLS SEAL, INDIVIDUAL COMPONENT NOT SOLD SEPARATELY) (AC-DELCO #24210712)	98-02	F (M30)	1	24210712
	6-C6	4.294	**SHAFT KIT**, MAN SHFT (INCL 82) (128.2MM) (LONG) (INCLS SEAL) (AC-DELCO #24210711)	98-02	F (M30)	1	24210711
85.	6-C6	4.290	**ACTUATOR**, PARK PAWL (INCLS ACTUATOR, ROD & SPRINGS) (AC-DELCO #8667517)	98-02	F (M30)	1	8667517
86.	6-C6	4.290	**BRACKET**, PARK PAWL ACTR (AC-DELCO #8667574)	98-02	F (M30)	1	8667574
87.		8.900	**BOLT-HEX**, M8X1.25X20, 16.88 THD, GM500 (10.9), PZOR, MACH (PARK LOCK BRACKET TO CASE) (AC-DELCO #11508687)	98-02	.....	AR	11508687
88.	6-C6	4.279	**LEVER**, MAN SHFT DTNT (AC-DELCO #24200486)	98-02	F (M30)	1	24200486
89.	6-C5	4.275	**LINK**, MAN VLV (*KIT1, KIT2) (AC-DELCO #8680731)	98-02	F (M30)	1	8680731
90.	6-C5	4.275	**NUT**, MAN SHFT DTNT LVR (M10X15.6H THD) (AC-DELCO #8648178)	98-02	F	1	8648178
91.		8.899	**BALL**, GRADE 2, STD DIA 1/4 (2), CHROME STL (NO. 10 CHECKBALL) (AC-DELCO #104918)	98-02	.....	AR	104918
93.	6-A22	4.133	**STOP**, TRANS FLUID LVL IND	98-02	F (M30)	1	24209835
94.	6-A17	4.115	**BOLT**, T/CV HSG (M10X1.5X45, 10 OD, TORX PLUS HD) (AC-DELCO #24203265)	98-02	F (M30)	8	24203265
95.	6-A21	4.128	**FITTING**, TRANS FLUID CLR PIPE (1/4X18) (QUICK CONN, NON BALL CK) (*KIT10) (AC-DELCO #24205102)	98-02	F (M30)	2	24205102
96.	6-A21	4.128	**RETAINER**, TRANS FLUID CLR PIPE FTG (*KIT10) (AC-DELCO #24205103)	98-02	F (M30)	AR	24205103
97.	6-A16	4.104	**PLUG**, T/CV HSG ACC HOLE (28MM W/3 TANGS) (SMALL CVR) (AC-DELCO #24205899) .	98-02	F (M30)	1	24205899

cardiagn.com

98.	6-A16	4.104	COVER, T/CV HSG ACC HOLE (AC-DELCO #24205900)	98-02	F (LS1, M30)	1	24205900
99.	6-B13	4.224	ORIFICE, LUB FLUID (4.3MM DIA) (*KIT10) (AC-DELCO #8663707)	98-02	F (M30)	1	8663707
102.	6-A17	4.115	HOUSING, T/CV (AC-DELCO #24205618)	98-02	F (L36, M30)	1	24205618
	6-A17	4.115	HOUSING, T/CV (AC-DELCO #24206953)	98-02	F (LS1, M30)	1	24206953
103.		N.S.	CASE KIT, A/TRNS (*KIT10)		.....		
104.	6-B22	4.233	SPRING, 1-2 ACCUM PSTN (INNER) (AC-DELCO #8684431)	98-02	F (L36, M30)	1	8684431
	6-B22	4.233	SPRING, 1-2 ACCUM PSTN (PINK) (INNER) (AC-DELCO #8685656)	98-02	F (LS1, M30)	1	8685656
105.	6-B22	4.233	SPRING, 2-4 BAND SERVO PSTN CUSH INR (AC-DELCO #8681195)	98-02	F (LS1, M30)	1	8681195
	6-B22	4.233	SPRING, 2-4 BAND SERVO PSTN CUSH INR (AC-DELCO #8681195)	99-00	F (L36, M30)	1	8681195
110.	6-N20	2.559	BRACKET, ENG WRG HARN (3.682)	98-02	F (LS1, M30)	1	12554644
377.	6-B25	4.265	VALVE, PRESS CONT SOL (AC-DELCO #24209276)	98-00	F (M30)	1	24209276
	6-B25	4.265	VALVE, PRESS CONT SOL (AC-DELCO #24220158)	01-02	F (M30)	1	24220158

SERVICE KITS

6-A9	4.003	TRANSMISSION, AUTO (GOODWRENCH REMAN) (CODE 1FCD)	01	F (L36, M30, GU6)	1	24219083
6-A9	4.003	TRANSMISSION, AUTO (GOODWRENCH REMAN) (CODE 1FBD)	01	F (L36, M30, GU4)	1	24219084
6-A9	4.003	TRANSMISSION, AUTO (GOODWRENCH REMAN) (CODE 1FFD)	01	F (LS1, M30)	1	24219085
6-A9	4.003	TRANSMISSION, AUTO (GOODWRENCH REMAN) (CODE 2FCD)	02	F (L36, M30)	1	24221290
6-A9	4.003	TRANSMISSION, AUTO (GOODWRENCH REMAN) (CODE 2FBD)	02	F (L36, M30)	1	24221291
6-A9	4.003	TRANSMISSION, AUTO (GOODWRENCH REMAN) (CODE 2FFD)	02	F (LS1, M30)	1	24221292
6-A9	4.003	TRANSMISSION, AUTO (GOODWRENCH REMAN) (CODE 0FBD)	00	F (L36, M30, GU4)	1	24216075
6-A9	4.003	TRANSMISSION, AUTO (GOODWRENCH REMAN) (CODE 0FCD)	00	F (L36, M30, GU6)	1	24216076
6-A9	4.003	TRANSMISSION, AUTO (GOODWRENCH REMAN)	00	F (LS1, M30)	1	24216077

cardiagn.com

	6-A9	4.003	TRANSMISSION, AUTO (GOODWRENCH REMAN) (CODE 8FBD)	98	F (L36, M30, GU4)	1	24210671
	6-A9	4.003	TRANSMISSION, AUTO (GOODWRENCH REMAN) (CODE 8FCD)	98	F (L36, M30, GU6)	1	24210672
	6-A9	4.003	TRANSMISSION, AUTO (GOODWRENCH REMAN) (CODE 8FFD)	98	F (LS1, M30)	1	24210673
	6-A9	4.003	TRANSMISSION, AUTO (GOODWRENCH REMAN) (CODE 9FBD)	99	F (L36, M30, GU4)	1	24212630
	6-A9	4.003	TRANSMISSION, AUTO (GOODWRENCH REMAN) (CODE 9FCD)	99	F (L36, M30, GU6)	1	24212629
	6-A9	4.003	TRANSMISSION, AUTO (GOODWRENCH REMAN) (CODE 9FFD)	99	F (LS1, M30)	1	24212631
1.	6-A12	4.005	GASKET KIT, A/TRNS SERV (INCL 2, 5, 6, 18-9, 21, 26-7, 30, 34, 44-5, 47, 52, 55-6, 72-3, 82, 89) (W/O PLATES OR PISTONS) (AC-DELCO #24201803)	98-01	F (M30)	1	24201803
	6-A12	4.005	GASKET KIT, A/TRNS SERV (INCL 2, 5, 6, 18-9, 21, 26-7, 30, 34, 44-5, 47, 52, 55-6, 72-3, 82, 89) (AC-DELCO #24221347)	02	F (M30)	1	24221347
2.		N.S.	TRANSMISSION KIT, AUTO (SERV OVERHAUL W/PLT, GSKT, SEAL) (USE 24201803 GASKET KIT T/W 24209562 PLATE KIT T/W 24204496 PISTON KIT.)		.....		
3.	6-B12	4.197	FILTER KIT, A/TRNS FLUID (INCL 71-73) (USED W/SHALLOW PAN) (AC-DELCO #24200796) ..	98-02	F (M30)	1	24200796
4.	6-B25	4.265	GASKET KIT, C/VLV BODY SPCR PLT (INCL 47, 52) (AC-DELCO #8685951)	98-00	F (M30)	1	8685951
	6-B25	4.265	GASKET KIT, C/VLV BODY SPCR PLT (INCL 47, 52) (AC-DELCO #24221350)	01-02	F (M30)	1	24221350
5.	6-B21	4.229	RING KIT, 2-4 BAND SERVO 2ND APPL PSTN FLUID SEAL (INCL 19) (.55 RATIO) (INCLS INR & OTR RING) (AC-DELCO #8642924)	98-02	F (M30)	1	8642924
	6-B21	4.229	RING KIT, 2-4 BAND SERVO 2ND APPL PSTN FLUID SEAL (INCL 18, 19) (.74 RATIO) (INCLS 2 RINGS) (AC-DELCO #8642925)	98-02	F (M30)	1	8642925
6.	6-B18	4.226	PISTON KIT, 1-2 & 3-4 ACCUM (INCL 44, 45, 55, 56) (W/RINGS & ALUM PISTONS) (AC-DELCO #24204496)	98-02	F (M30)	1	24204496

cardiagn.com

	6–B18	4.228	PISTON KIT, 1–2 ACCUM (INCL 44, 45, 55, 56) (INCL 1–2 PLASTIC PISTON & 3–4 ALUM PISTON) (AC–DELCO #24214343)	98–01	F (M30)	1	24214343
	6–B18	4.228	PISTON KIT, 1–2 ACCUM (INCL 44, 45, 55, 56) (INCLS 1 1/2 & 1 3/4 ACCUM PSTN & SEAL ASM) .	01–02	F (M30)	1	24221919
7.	6–B18	4.228	ACCUMULATOR, 1–2 (INCL 43, 54–7) (AC–DELCO #8684452) ..	98–01	F (L36, M30)	1	8684452
	6–B18	4.228	ACCUMULATOR, 1–2 (INCL 43, 54–7) (AC–DELCO #24203239)	98–01	F (LS1, M30)	1	24203239
	6–B18	4.228	ACCUMULATOR, 1–2 (INCL 43, 54–7) (AC–DELCO #24219934)	02	F (L36, M30)	1	24219934
	6–B18	4.228	ACCUMULATOR, 1–2 (INCL 43, 54–7) (AC–DELCO #24220143)	02	F (LS1, M30)	1	24220143
8.	6–B18	4.228	PISTON KIT, 2–4 BAND SERVO 2ND APPLY (INCL 17, 18, 19) (W/RINGS) (AC–DELCO #8642613)	98–02	F (L36, M30)	1	8642613
	6–B18	4.228	PISTON KIT, 2–4 BAND SERVO 2ND APPLY (INCL 17, 18, 19) (YELLOW) (.74) (AC–DELCO #8642079)	98–02	F (LS1, M30)	1	8642079
10.	6–A16	4.103	CASE KIT, A/TRNS (INCLUDES 9, 11, 38, 40, 42, 82, 95, 96, 99, 103) (INCLS BUSHING, CASE, FITT, PLUG & VALVE) (AC–DELCO #24211244)	98–02	F (LS1, M30)	1	24211244
	6–A16	4.103	CASE KIT, A/TRNS (INCLUDES 9, 11, 38, 40, 42, 82, 95, 96, 99, 103) (INCLS BUSHING, CASE, FITT, PLUG & VALVE) (AC–DELCO #24211244)	98–02	F (L36, M30)	1	24211244

RPO DEFINITIONS

GU4 – AXLE,REAR,3.08 RATIO
GU6 – AXLE,REAR,3.42 RATIO
LS1 – ENGINE GAS, 8 CYL, 5.7L, SFI, ALUMINUM ENGINE
L36 – ENGINE GAS, 6 CYL, 3.8K, MFI, V6, HO (ERV6 SERIES)
M30 – TRANSMISSION,AUTOMATIC 4 SPEED,4L60E,ELECTRONIC

cardiagn.com

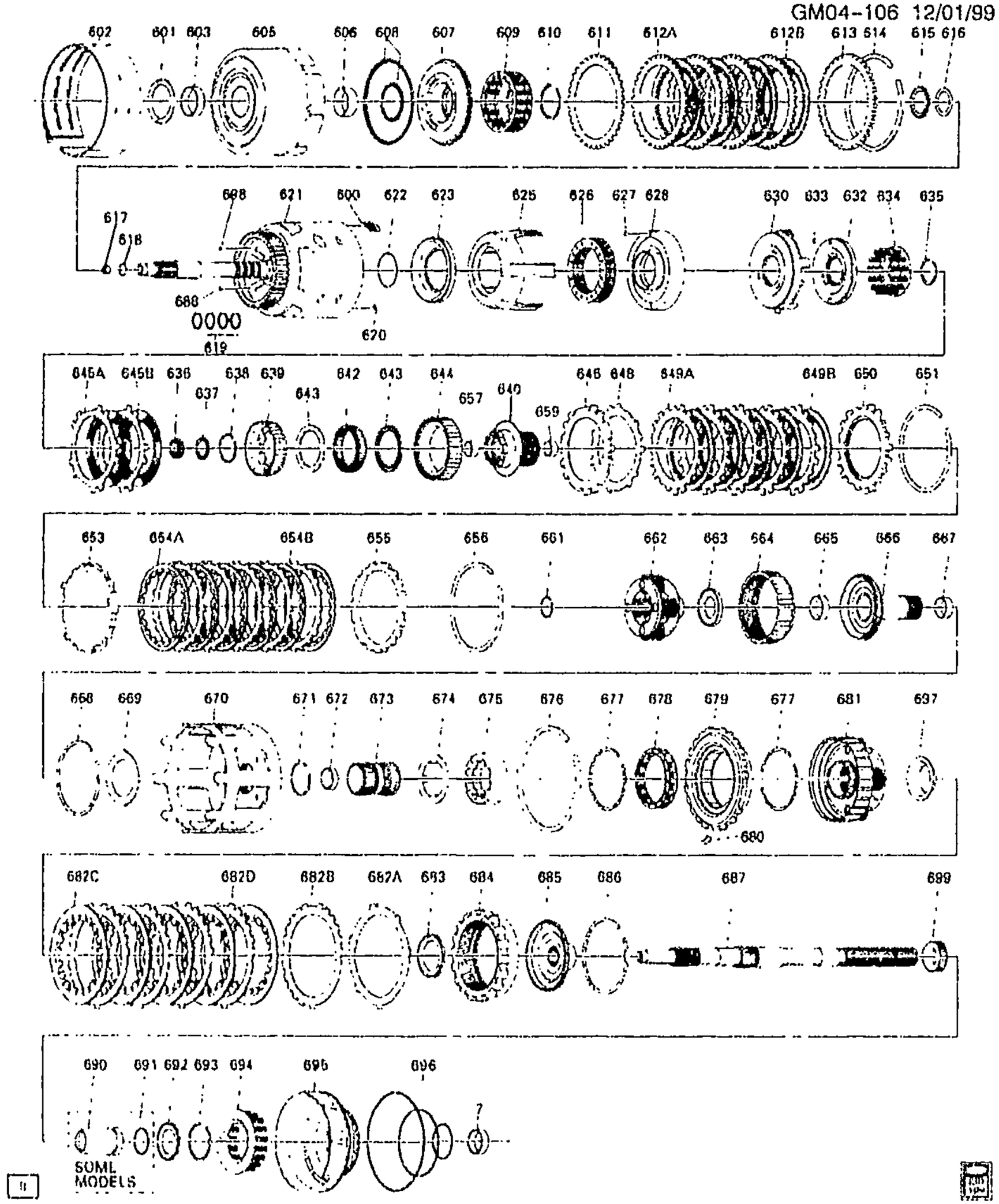

GM04-106F

1999-2002 F AUTOMATIC TRANSMISSION (M30) PART 2 (4L60E) CLUTCH GEARS

7.	6-N28	5.556	BUSHING, PROP SHF FRT SLIP YOKE (INSIDE DIAM 1.506-1.504 (PT OF TRANS EXT) (AC-DELCO #24207915)	99-02 F (M30)	1 24207915

cardiagn.com

600.	6-A24	4.163	SPRING, 3RD & 4TH CLU BOOST (INCLS RET & (2) SPRNGS) (*KIT7) (AC-DELCO #8667424)	99-02	F (M30)	5	8667424
601.	6-B10	4.189	WASHER, REV INPUT CLU HSG THR (4.226) (AC-DELCO #08642041)	99-02	F (M30)	1	8642041
602.	6-B24	4.251	BAND, 2-4 (AC-DELCO #24201131)	99-02	F (M30)	1	24201131
603.	6-B9	4.180	BUSHING, REV INPUT CLU HSG FRT (ALSO PART OF 605) (AC-DELCO #8642905)	99-02	F (M30)	1	8642905
605.	6-B7	4.169	HOUSING, REV INPUT CLU (INCL 603, 606) (AC-DELCO #8681295)	99-02	F (M30)	1	8681295
606.	6-B7	4.169	BUSHING, DIR CLU HSG RR (ALSO PART OF 605) (AC-DELCO #8628917)	99-02	F (M30)	1	8628917
607.	6-B5	4.166	PISTON, REV INPUT CLU (.095 HOLE) (AC-DELCO #8667841) .	99-02	F (M30)	1	8667841
608.	6-B5	4.166	SEAL KIT, REV INPUT CLU (INCLS SEALS) (*KIT2, KIT3) (AC-DELCO #8657922)	99-02	F (M30)	1	8657922
609.	6-B5	4.164	SPRING, REV INPUT CLU (AC-DELCO #8647284)	99-02	F (M30)	1	8647284
610.	6-B5	4.164	RING, REV INPUT CLU SPR RET (*KIT4) (AC-DELCO #8628059) .	99-02	F (M30)	1	8628059
611.	6-A24	4.163	PLATE, REV INPUT CLU (WAVED) (AC-DELCO #8663074)	99-02	F (M30)	1	8663074
612.	6-A24	4.163	PLATE, REV INPUT CLU (ILLUSTRATED AS 612B) (153MM DIA) (*KIT8) (AC-DELCO #8673605)	99-02	F (M30)	4	8673605
	6-A24	4.163	PLATE, REV INPUT CLU (ILLUSTRATED AS 612A) (W/ HOLES IN TURB PLATES) (AC-DELCO #24205267)	99-02	F (M30)	AR	24205267
613.	6-A24	4.163	PLATE, REV INPUT CLU BKG (7.25-7.41MM) (AC-DELCO #8682863)	99-01	F (M30)	1	8682863
	6-A24	4.163	PLATE, REV INPUT CLU BKG (6.52-6.68MM) (AC-DELCO #8682864)	99-01	F (M30)	1	8682864
	6-A24	4.163	PLATE, REV INPUT CLU BKG (5.79-5.95MM) (AC-DELCO #8682865)	99-01	F (M30)	1	8682865
	6-A24	4.163	PLATE, REV INPUT CLU BKG (5.787-5.947MM) (AC-DELCO #24212463)	02	F (M30)	1	24212463
	6-A24	4.163	PLATE, REV INPUT CLU BKG (6.518-6.678MM) (AC-DELCO #24212464)	02	F (M30)	1	24212464
	6-A24	4.163	PLATE, REV INPUT CLU BKG (7.409-7.249MM) (AC-DELCO #24212465)	02	F (M30)	1	24212465

cardiagn.com

614.	6–B5	4.164	RING, REV INPUT CLU BKG PLT RET (YELLOW) (AC–DELCO #8667022)	99–02	F (M30)	1	8667022
615.	6–A24	4.162	BEARING, REV INPUT CLU HSG THR (STATOR SHF) (TO SEL WA) (AC–DELCO #8642066)	99–02	F (M30)	1	8642066
616.	6–B10	4.189	WASHER, REV INPUT CLU HSG THR (1.87–1.97MM) (4.158) (AC–DELCO #8642067)	99–02	F (M30)	1	8642067
	6–B10	4.189	WASHER, REV INPUT CLU HSG THR (2.04–2.14MM) (4.158) (AC–DELCO #8642068)	99–02	F (M30)	1	8642068
	6–B10	4.189	WASHER, REV INPUT CLU HSG THR (2.21–2.31MM) (4.158) (AC–DELCO #8642069)	99–02	F (M30)	1	8642069
	6–B10	4.189	WASHER, REV INPUT CLU HSG THR (2.38–2.48MM) (4.158) (AC–DELCO #8642070)	99–02	F (M30)	1	8642070
	6–B10	4.189	WASHER, REV INPUT CLU HSG THR (2.55–2.65MM) (4.158) (AC–DELCO #8642071)	99–02	F (M30)	1	8642071
	6–B10	4.189	WASHER, REV INPUT CLU HSG THR (2.72–2.82MM) (4.158) (AC–DELCO #8642072)	99–02	F (M30)	1	8642072
	6–B10	4.189	WASHER, REV INPUT CLU HSG THR (2.89–2.99MM) (4.158) (AC–DELCO #8642073)	99–02	F (M30)	1	8642073
	6–B10	4.189	WASHER, REV INPUT CLU HSG THR (3.06–3.16MM) (4.158) (AC–DELCO #8642074)	99–02	F (M30)	1	8642074
617.	6–A20	4.123	VALVE, TURB SHF BALL CHK (PART OF 621) (AC–DELCO #8685839)	99–02	F (M30)	1	8685839
618.	6–A20	4.123	SEAL, TURB SHF (O RING) (*KIT2, KIT3) (AC–DELCO #24212987)	99–02	F (LS1, M30)	1	24212987
	6–A20	4.123	SEAL, TURB SHF (O RING) (TO SEL WA) (*KIT2, KIT3) (AC–DELCO #8662686)	99–02	F (L36, M30)	1	8662686
619.	6–A20	4.123	RING, INPUT SHF FLUID SEAL (TEFLON) (TEFLON) (*KIT2, KIT3) (AC–DELCO #8667035)	99–02	F (M30)	4	8667035
620.	6–A20	4.123	VALVE, 3–4 CLU HSG BALL CHK (ALSO PART OF 621) (AC–DELCO #24208262)	99–02	F (M30)	1	24208262
621.	6–A23	4.158	HOUSING, 3–4 CLU (W/INPUT SHF) (INCL 617, 620) (AC–DELCO #24200902)	99–02	F (L36, M30)	1	24200902
	6–A23	4.158	HOUSING, 3–4 CLU (W/INPUT SHF) (INCL 617, 620) (AC–DELCO #24209840)	99–02	F (LS1, M30)	1	24209840
622.		N.S.	SEAL, O–RING INPUT TO FWD HSG (*KIT1, KIT2, KIT3)				
623.	6–B5	4.166	PISTON, 3–4 CLU (AC–DELCO #24200290)	99–02	F (M30)	1	24200290
625.	6–B7	4.167	RING, 3–4 CLU APPL (1 BAR) (*KIT7) (AC–DELCO #8685043)	99–02	F (M30)	1	8685043

cardiagn.com

626.	6–B7	4.167	**SPRING**, 3–4 CLU (105.12MM O.D.) (AC–DELCO #8685244) ...	99–02	F (M30)	1	8685244
627.	6–A20	4.123	**VALVE**, FWD CLU HSG BALL CHK (ALSO PART OF 628) (SINGLE ORIFICE) (TALL & NARROW) (4.226) (AC–DELCO #8628732)	99	F (M30)	1	8628732
	6–A20	4.123	**VALVE**, FWD CLU HSG BALL CHK (ALSO PART OF 628) (SHORT & WIDE) (AC–DELCO #24205181)	99–02	F (M30)	1	24205181
628.	6–B7	4.169	**HOUSING**, FWD CLU (INCL 627) (INCLS HOUSINGS & VALVE) (AC–DELCO #24205298)	99–02	F (M30)	1	24205298
630.	6–B5	4.166	**PISTON**, FWD CLU (*KIT11) (AC–DELCO #24205272)	99–02	F (M30)	1	24205272
632.	6–B5	4.166	**PISTON**, OVERRUN CLU (INCL 633) (STEEL W/ INTEGRAL SEAL) (*KIT11) (AC–DELCO #24205273)	99–02	F (M30)	1	24205273
633.		8.899	**BALL**, SPECIAL, 3/16 STEEL (ALSO PART OF 632) (AC–DELCO #7002117)	99–02	.....	AR	7002117
634.	6–A24	4.163	**SPRING**, OVERRUN CLU (*KIT11) (AC–DELCO #24206085)	99–02	F (M30)	1	24206085
635.		8.934	**RING**, EXT SNAP FITS M38 DIA SHT .PL (*KIT4)	99–02	.....	AR	11500692
636.	6–B8	4.176	**SEAL**, OUTPUT SHT (*KIT1, KIT2, KIT3) (AC–DELCO #8677268)	99–02	F (M30)	1	8677268
637.	6–A23	4.159	**BEARING**, INPUT SUN GR THR (AC–DELCO #8642162)	99–02	F (M30)	1	8642162
638.	6–B9	4.180	**RING**, OVERRUN CLU HUB RET (SNAP) (*KIT4, KIT11) (AC–DELCO #8647083)	99–02	F (M30)	1	8647083
639.		N.S.	**HUB**, OVERRUN CLU (*KIT11) ...		.....		
640.		N.S.	**GEAR**, INPUT SUN (*KIT11)		.....		
642.		N.S.	**SPRAG**, FWD CLU (*KIT11)		.....		
643.		N.S.	**RETAINER** (*KIT11)		.....		
644.		N.S.	**RACE**, FWD CLU SPRAG OTR (*KIT11)		.....		
645.	6–A24	4.163	**PLATE**, OVERRUN CLU (ILLUSTRATED AS 645A) (1.93–2.13 THK) (GROOVED) (*KIT8) (AC–DELCO #24210766)	99–02	F (M30)	2	24210766
	6–A24	4.163	**PLATE**, OVERRUN CLU (ILLUSTRATED AS 645B) (2.34MM THK) (FLAT STEEL) (AC–DELCO #8642154)	99–02	F (M30)	2	8642154
646.	6–A24	4.163	**PLATE**, FWD CLU APPLY (AC–DELCO #8682866)	99–00	F (M30)	1	8682866
	6–A24	4.163	**PLATE**, FWD CLU APPLY (AC–DELCO #24212462)	01–02	F (M30)	1	24212462
648.	6–A24	4.163	**PLATE**, FWD CLU (WAVED) (AC–DELCO #24203903)	99–02	F (L36, M30, GU6)	1	24203903
	6–A24	4.163	**PLATE**, FWD CLU (WAVED) (AC–DELCO #8647058)	99–02	F (L36, M30, GU4)	1	8647058

cardiagn.com

	6-A24	4.163	PLATE, FWD CLU (WAVED) (AC-DELCO #8647058)	99-02	F (LS1, M30)	1	8647058
649.	6-A24	4.163	PLATE, FWD CLU (ILLUSTRATED AS 649A) (FIBER) (*KIT3, KIT5, KIT8) (AC-DELCO #24210765) .	99-02	F (M30)	5	24210765
	6-A24	4.163	PLATE, FWD CLU (ILLUSTRATED AS 649B) (STEEL) (*KIT3, KIT5, KIT8) (AC-DELCO #8654325) ...	99-02	F (M30)	5	8654325
650.	6-A24	4.163	PLATE, FWD CLU BKG (6.92-7.07MM) (ID A) (AC-DELCO #8682867)	99-00	F (M30)	1	8682867
	6-A24	4.163	PLATE, FWD CLU BKG (8.73-9 03MM) (ID B) (AC-DELCO #8682868)	99-00	F (M30)	1	8682868
	6-A24	4.163	PLATE, FWD CLU BKG (4.56-4.71MM) (ID E) (AC-DELCO #8682871)	99-00	F (M30)	1	8682871
	6-A24	4.163	PLATE, FWD CLU BKG (7.55MM-7.85MM) (AC-DELCO #24212467)	99-02	F (M30)	1	24212467
	6-A24	4.163	PLATE, FWD CLU BKG (8.14MM-8.44MM) (AC-DELCO #24212468)	99-02	F (M30)	1	24212468
	6-A24	4.163	PLATE, FWD CLU BKG (6.96MM-7.26MM) (AC-DELCO #24212466)	01-02	F (M30)	1	24212466
	6-A24	4.163	PLATE, FWD CLU BKG (8.73MM-9.03MM) (AC-DELCO #24212469)	01-02	F (M30)	1	24212469
	6-A24	4.163	PLATE, FWD CLU BKG (9.32MM-9.62MM) (AC-DELCO #24212470)	01-02	F (M30)	1	24212470
651.	6-A24	4.163	RING, FWD CLU BKG PLT RET (AC-DELCO #8642170)	99-02	F (M30)	1	8642170
653.	6-A24	4.163	PLATE, 3-4 CLU APPLY (*KIT7) (AC-DELCO #8685044)	99-02	F (M30)	1	8685044
654.	6-A24	4.163	PLATE KIT, CLU (3-4 CLUTCH STEEL & FIBER) (*KIT3, KIT7, KIT8) (AC-DELCO #24209563) .	99-02	F (M30)	1	24209563
655.	6-A24	4.163	PLATE, 3-4 CLU BKG (ID BY 3 DIMPLES) (*KIT7) (AC-DELCO #8685046)	99-00	F (M30)	1	8685046
	6-A24	4.163	PLATE, 3-4 CLU BKG (3.90MM-4.10MM) (*KIT7) (AC-DELCO #24212459)	99-02	F (M30)	1	24212459
	6-A24	4.163	PLATE, 3-4 CLU BKG (5.68MM-5.88MM) (*KIT7) (AC-DELCO #24212461)	01-02	F (M30)	1	24212461
	6-A24	4.163	PLATE, 3-4 CLU BKG (SELECTIVE) (4.79-4.99MM THK) (*KIT7) (AC-DELCO #24211896)	99-00	F (M30)	1	24211896
	6-A24	4.163	PLATE, 3-4 CLU BKG (SELECTIVE) (4.79-4.99MM) (*KIT7) (AC-DELCO #24212460)	01-02	F (M30)	1	24212460
656.	6-A24	4.163	RING, 3-4 CLU BKG PLT RET (AC-DELCO #8663636)	99-02	F (M30)	1	8663636

cardiagn.com

657.	6-A23	4.159	**BUSHING**, INPUT SUN GR FRT (FRT) (FRT & RR) (*KIT11) (AC-DELCO #8642181)	99-02	F (M30)	1	8642181
659.	6-A23	4.159	**BUSHING**, INPUT SUN GR FRT (REAR) (FRT & RR) (*KIT11) (AC-DELCO #8642181)	99-02	F (M30)	1	8642181
661.	6-B8	4.176	**RING**, OUTPUT SHF RET (TO INPUT CARR) (*KIT2, KIT3, KIT4) (AC-DELCO #8654141)	99-02	F (M30)	1	8654141
662.	6-B8	4.175	**CARRIER**, INPUT (COMPL) (AC-DELCO #24212177)	99-02	F (M30)	1	24212177
663.	6-A23	4.159	**BEARING**, INT REACTION GR SUPT THR (AC-DELCO #8642191)	99-00	F (M30)	1	8642191
	6-A23	4.159	**BEARING**, REACTION CARR THR (*KIT3) (AC-DELCO #24217327)	01-02	F (M30)	1	24217327
664.	6-A23	4.158	**GEAR**, INPUT INTL (AC-DELCO #8663639)	99-02	F (M30)	1	8663639
665.	6-B8	4.176	**BUSHING**, REACTION CARR SHF FRT (ALSO PART OF 666) (AC-DELCO #8642908)	99-02	F (M30)	1	8642908
666.	6-B8	4.175	**SHAFT**, REACTION CARR (INCL 665, 667) (AC-DELCO #8681518)	99-00	F (M30)	1	8681518
		N.S.	**SHAFT**, REACTION CARR (INCL 665, 667) (*KIT3)	01-02	(M30)	1	
667.	6-B8	4.176	**BUSHING**, REACTION CARR SHF RR (ALSO PART OF 666) (AC-DELCO #8642907)	99-02	F (M30)	1	8642907
668.	6-B8	4.176	**RING**, REACTION CARR SHF RET (TO INT GR) (AC-DELCO #8642201)	99-02	F (M30)	1	8642201
669.	6-B8	4.176	**WASHER**, REACTION CARR SHF THR (TO SHELL) (08642202 TO BE USED ONLY WITH 08683439) (AC-DELCO #8642202)	99-00	F (M30)	1	8642202
	6-B8	4.176	**WASHER**, REACTION CARR SHF THR (*KIT3) (4.159) (AC-DELCO #24217328)	01-02	F (M30)	1	24217328
670.	6-B8	4.175	**SHELL**, REACTION SUN GR (AC-DELCO #8683439)	99-00	F (M30)	1	8683439
	6-B8	4.175	**SHELL**, REACTION SUN GR (*KIT3) (AC-DELCO #24217145)	01-02	F (M30)	1	24217145
671.	6-A23	4.159	**RING**, REACTION SUN GR RET (AC-DELCO #8681553)	99-02	F (M30)	1	8681553
672.	6-B8	4.176	**BUSHING**, REACTION SUN GR (ALSO PART OF 673) (AC-DELCO #8642909)	99-02	F (M30)	1	8642909
673.	6-A23	4.159	**GEAR**, REACTION SUN (INCL 672) (INCLS BUSH & GEAR) (INDIVIDUAL COMPONENTS NOT SOLD SEPARATELY) (AC-DELCO #8642204)	99-02	F (M30)	1	8642204
674.	6-A23	4.159	**WASHER**, REACTION SUN GR SHELL THR (4.176) (AC-DELCO #8642331)	99-02	F (M30)	1	8642331

cardiagn.com

675.	6-B9	4.180	**RACE**, LOW CLU RLR INR (AC-DELCO #8673300)	99-02	F (M30)	1	8673300
676.	6-B9	4.180	**RING**, LOW & REV CLU SUPT RET (AC-DELCO #24200278)	99-02	F (M30)	1	24200278
677.	6-B9	4.180	**RING**, LOW CLU RLR RET (OVERRUN) (AC-DELCO #6261051)	99-02	F (M30)	2	6261051
678.	6-B5	4.166	**SUPPORT**, LOW & REV CLU (INCL 679) (*KIT6) (4.180) (AC-DELCO #8681727)	99-02	F (M30)	1	8681727
679.		N.S.	**SUPPORT**, LO & REV CLU (PART OF 678) (*KIT6)				
680.	6-B9	4.180	**SPRING**, LOW & REV CLU SUPT (RET) (AC-DELCO #6261415)	99-02	F (M30)	1	6261415
681.	6-B8	4.175	**CARRIER**, REACTION (W/DEFLECTOR) (INCL 697) (AC-DELCO #8654200)	99-02	F (M30)	1	8654200
682.	6-A24	4.163	**PLATE**, LOW & REV CLU (WAVED) (ILLUSTRATED AS 682A) (*KIT3, KIT6) (AC-DELCO #8676362)	99-02	F (M30)	1	8676362
	6-A24	4.163	**PLATE**, LOW & REV CLU (ILLUSTRATED AS 682B) (1.829MM) (HAS HOLES IN TURB PLATES) (STEEL) (*KIT3, KIT6) (AC-DELCO #24205268)	99-02	F (M30)	5	24205268
	6-A24	4.163	**PLATE**, LOW & REV CLU (ILLUSTRATED AS 682B) (2.344MM) (HAS HOLES IN TURB PLATES) (*KIT3, KIT6) (AC-DELCO #24205270)	99-02	F (M30)	1	24205270
	6-A24	4.163	**PLATE**, LOW & REV CLU (ILLUSTRATED AS 682B) (1.314MM) (HAS HOLES IN TURB PLATES) (*KIT3, KIT6) (AC-DELCO #24205269)	99-02	F (M30)	1	24205269
	6-A24	4.163	**PLATE**, LOW & REV CLU (FLAT FACED) (ILLUSTRATED AS 682C) (NON-SEGMENTED COMPLETE SET OF 5) (*KIT3, KIT6, KIT8) (AC-DELCO #8684089)	99-01	F (M30)	5	8684089
	6-A24	4.163	**PLATE**, LOW & REV CLU (FLAT FACED) (ILLUSTRATED AS 682C) (SEGMENTED-COMPLETE SET OF 5) (*KIT3, KIT6, KIT8) (AC-DELCO #24216946)	02	F (M30)	5	24216946
	6-A24	4.163	**PLATE**, LOW & REV CLU (ILLUSTRATED AS 682D) (1.829MM) (HAS HOLES IN TURB PLATES) (STEEL) (*KIT3, KIT6) (AC-DELCO #24205268)	99-02	F (M30)	AR	24205268
683.	6-A23	4.159	**BEARING**, REACTION CARR THR (4.176) (AC-DELCO #8642215)	99-02	F (M30)	1	8642215
	6-A23	4.159	**BEARING**, DIFF CARR SUN GR THR (AC-DELCO #8646254)	99	F (M30)	1	8646254
684.	6-A23	4.158	**GEAR**, REACTION INTL (AC-DELCO #8667055)	99-02	F (M30)	1	8667055

cardiagn.com

685.	6-B8	4.175	SUPPORT, REACTION INTL GR (AC-DELCO #8681491)	99-02	F (M30)	1	8681491
686.	6-B8	4.175	RING, INT REACTION GR SUPT RET (AC-DELCO #8642220)	99-02	F (M30)	1	8642220
687.	6-B8	4.175	SHAFT, OUTPUT (AC-DELCO #8683817)	99-02	F (M30)	1	8683817
688.	6-B13	4.224	ORIFICE, LUB FLUID (4.3MM DIA) (AC-DELCO #8663707)	99-02	F (M30)	1	8663707
690.		N.S.	SLEEVE, OUTPUT SHF (NOT REQD)				
691.		N.S.	SEAL, OUTPUT SHF (NOT REQ'D) (*KIT2, KIT3)				
692.	6-A23	4.159	BEARING, REACTION CARR THR (AC-DELCO #8642191)	99-02	F (M30)	1	8642191
693.	6-B5	4.164	RING, LOW & REV CLU SPR RET RET (*KIT4, KIT6) (4.159) (AC-DELCO #8647337)	99-02	F (M30)	1	8647337
694.	6-B5	4.164	SPRING, LOW & REV CLU (AC-DELCO #8642227)	99-02	F (M30)	1	8642227
695.	6-B5	4.166	PISTON, LOW & REV CLU (*KIT6) (AC-DELCO #8685549)	99-02	F (M30)	1	8685549
696.	6-B10	4.189	SEAL KIT, LOW & REV CLU (INCLS INR, OTR & INTER SEALS) (*KIT2, KIT3, KIT6) (4.166) (AC-DELCO #8648987)	99-02	F (M30)	1	8648987
697.		N.S.	DEFLECTOR, OIL (PART OF S81)				
698.	6-B13	4.224	ORIFICE, LUB FLUID (4.3MM DIA) (AC-DELCO #8663707)	99-02	F (M30)	1	8663707
699.	6-C11	4.343	WHEEL, VEH SPD SEN RELUCTOR (AC-DELCO #24202711)	99-02	F (M30)	1	24202711

SERVICE KITS

1.	6-B5	4.166	SEAL KIT, 3-4 CLU PSTN (FOA) (INCL 622, 624, 629, 631, 636) (AC-DELCO #8642919)	99-02	F (M30)	1	8642919
2.	6-A12	4.005	GASKET KIT, A/TRNS SERV (INCL 608, 618-19, 622, 624, 629, 631, 636, 661, 691, 696) (W/O PLATES OR PISTONS) (AC-DELCO #24201803)	99-01	F (M30)	1	24201803
	6-A12	4.005	GASKET KIT, A/TRNS SERV (INCL 608, 618-19, 622, 624, 629, 631, 636, 661, 691, 696) (AC-DELCO #24221347)	02	F (M30)	1	24221347
3.	6-A23	4.159	SHELL KIT, REACTION SUN GR (INCLS 663, 666, 669, 670)	01-02	F (M30)	1	24221190
4.	6-A12	4.005	RING KIT, RET (INCL 610, 635, 638, 661, 693) (AC-DELCO #8642910)	99-02	F (M30)	1	8642910
5.	6-A24	4.163	PLATE KIT, FWD CLU (INCL 649, 702) (INCLS INST SHEET & PLATES) (AC-DELCO #8647991)	99-02	F (M30)	1	8647991

cardiagn.com

6.	6–A24	4.163	PLATE KIT, LOW & REV CLU (W/SUPT) (W/PSTN) (INCL ITEMS 678–9, 682, 693, 695–6) (STEEL PLATES) (AC–DELCO #8687996)	99–02	F (M30)	1	8687996
7.	6–A24	4.163	PLATE KIT, 3–4 CLU (INCL 600, 625, 653, 654, 655B) (AC–DELCO #24209032)	99–02	F (M30)	1	24209032
8.	6–A24	4.163	PLATE KIT, CLU ((INCLS 612A, 645A, 649, 654A, 682C)) (HAS FIBER PLTS) (AC–DELCO #24209031)	99–01	F (M30)	1	24209031
	6–A24	4.163	PLATE KIT, CLU ((INCLS 612A, 645A, 649, 654A, 682C)) (COMPL KIT, INCLUDING 3–4) (AC–DELCO #24209562)	02	F (M30)	1	24209562
10.	6–B5	4.166	PISTON KIT, FWD CLU & OVERRUN CLU (INCL 630, 632, 634) (AC–DELCO #24209542) ..	99–02	F (M30)	1	24209542
11.	6–B5	4.164	CLUTCH, FWD RLR (INCL 638, 639, 640, 642, 643, 644, 657, 659) (HIGH SPD, INCLS INPUT SUN GEAR) (AC–DELCO #24210960)	99–02	F (M30)	1	24210960
	6–B5	4.164	CLUTCH, FWD RLR (INCL 638, 639, 640, 642, 643, 644, 657, 659) (REG SPD, INCLS INPUT SUN GEAR) (AC–DELCO #24210961)	99–02	F (M30)	1	24210961

RPO DEFINITIONS
GU4 – AXLE,REAR,3.08 RATIO
GU6 – AXLE,REAR,3.42 RATIO
LS1 – ENGINE GAS, 8 CYL, 5.7L, SFI, ALUMINUM ENGINE
L36 – ENGINE GAS, 6 CYL, 3.8K, MFI, V6, HO (ERV6 SERIES)
M30 – TRANSMISSION,AUTOMATIC 4 SPEED,4L60E,ELECTRONIC

cardiagn.com

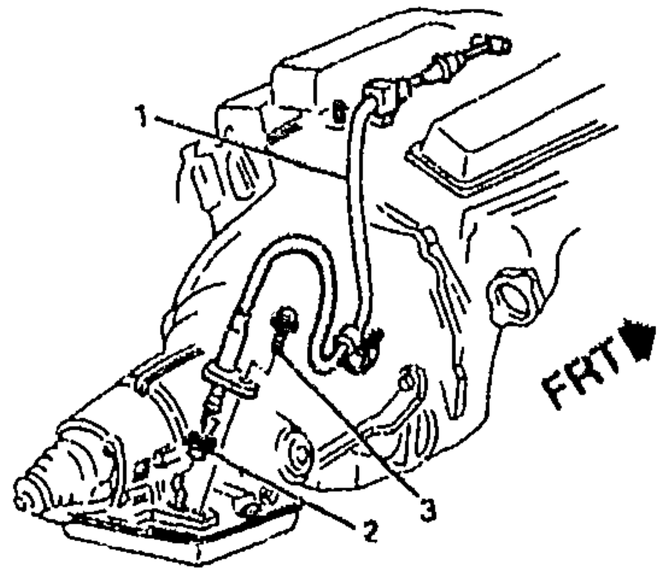

(L32)

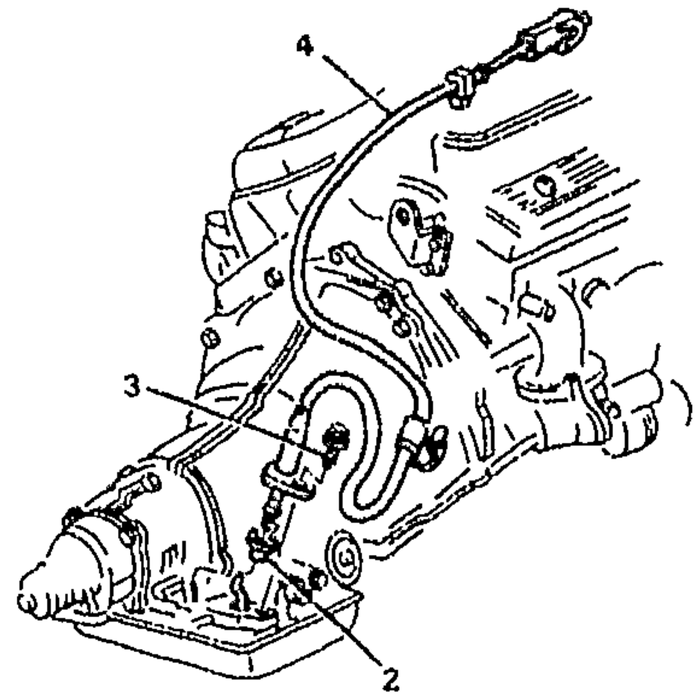

(LT1)

MF04-018

1993 F THROTTLE VALVE CABLE (MD8)

1.	6-A13	4.050	**CABLE**, A/TRNS T/V	93 F (L32, MD8)	1	10163808
2.	6-A13	4.050	**SEAL**, A/TRNS T/V CBL (O RING) (21.26MM DIA)	93 F	1	25518260
3.		8.900	**BOLT**, HEX W/CON WA, M6X1X20, FULL THD, PZOR, 12.5 OD, 9.8 (A/TRNS T/V CBL)	93	1	11509024
4.	6-A13	4.050	**CABLE**, A/TRNS T/V	93 F (LT1, MD8)	1	10241763

RPO DEFINITIONS
LT1 – ENGINE-GAS, 8 CYL, 5.7L(5.7P),MFI,HO
L32 – ENGINE,3.4L,V6,(3.4S),SFI,OHV
MD8 – TRANSMISSION,AUTOMATIC 4-SPEED(THM700R4/4L60)

cardiagn.com

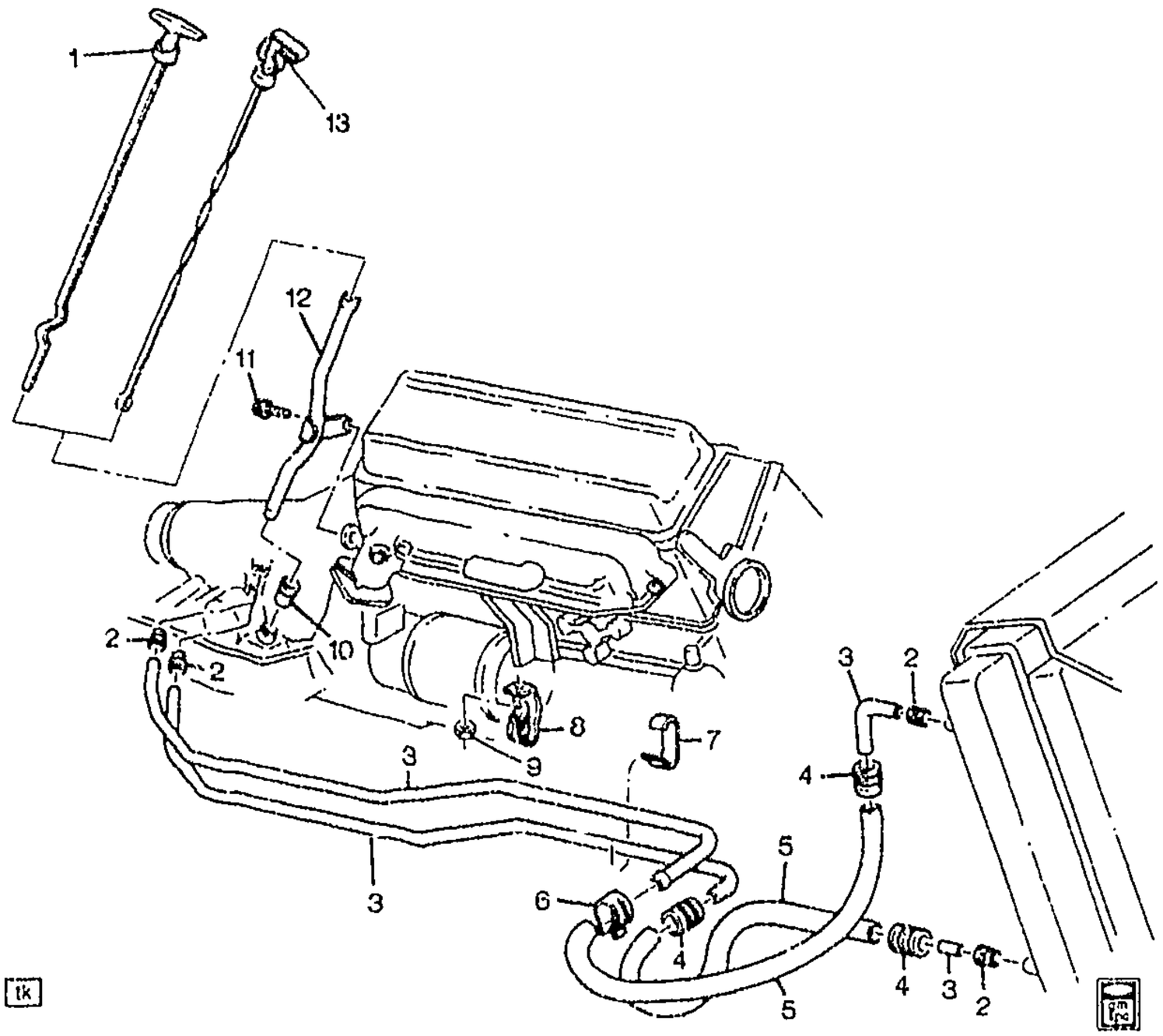

MF04-003

1993 F FILLER TUBE & OIL COOLER PIPES (MD8)

1.	6-A22	4.133	INDICATOR, TRANS FLUID LVL (T-SHAPED HDL)	93	F (LT1, MD8) (EXC B4C)	1	10150055
	6-A22	4.133	INDICATOR, TRANS FLUID LVL (T-SHAPED HDL)	93	F (L32, MD8)	1	10241661
2.		8.963	NUT, INVTD FLRD TUBE, 5/16, 1/2-20, .62 LNG (4.128)	93	F	4	15725180
3.		8.964	TUBING, SERVICE 5/16" COILED STEEL (25FT)	93	F	AR	12541500
4.		8.948	CLAMP, SIZE 6, .30MIN. - .87MAX - HEX/SLOTTED	93	F	3	15620999
5.		8.962	HOSE, 7.9 MM X 3050 MM LGTH +/- 30.48 MM, BULK, GM6260-M (AC-DELCO #12339996)	93	F	AR	12339996
6.		8.948	CLAMP, SIZE 6, .30MIN. - .87MAX - HEX/SLOTTED (TRANS OIL CLR UPR HOSE) ...	93	F	1	15620999
7.	6-A21	4.128	CLIP, TRANS FLUID CLR PIPE ...	93	F	1	10225624
8.	6-A21	4.128	CLIP, TRANS FLUID CLR PIPE ...	93	F (L32, MD8)	1	14027939
	6-A21	4.128	CLIP, TRANS FLUID CLR PIPE ...	93	F (LT1, MD8)	1	10224905
9.		8.917	NUT, HFX, 1/4-20X.234, 284M,	93	F	1	9439915

cardiagn.com

10.	6-A22	4.133	SEAL, TRANS FLUID FIL TUBE (AC-DELCO #1259475)	93	F (MD8)	1	1259475
11.		8.900	BOLT, HFH 3/8-16X1.38 280M PZOR (TRANS)	93	F (LT1, MD8)	4	9439918
	6-A16	4.085	BOLT, TRANS (TRANS) (M12X1.75X45, 30 THD, 26.6 OD, 10.9) (8.900)	93	F (L32, MD8)	6	11515778
12.	6-A22	4.133	TUBE, TRANS FLUID FIL	93	F (L32, MD8)	1	10241664
	6-A22	4.133	TUBE, TRANS FLUID FIL	93	F (LT1, MD8)	1	12550136
13.	6-A22	4.133	INDICATOR, TRANS FLUID LVL (L-SHAPED HDL)	93	F (LT1, MD8, B4C)	1	12550616

RPO DEFINITIONS
B4C – PACKAGE SPECIAL SERVICE
LT1 – ENGINE-GAS, 8 CYL, 5.7L(5.7P),MFI,HO
L32 – ENGINE,3.4L,V6,(3.4S),SFI,OHV
MD8 – TRANSMISSION,AUTOMATIC 4-SPEED(THM700R4/4L60)

cardiagn.com

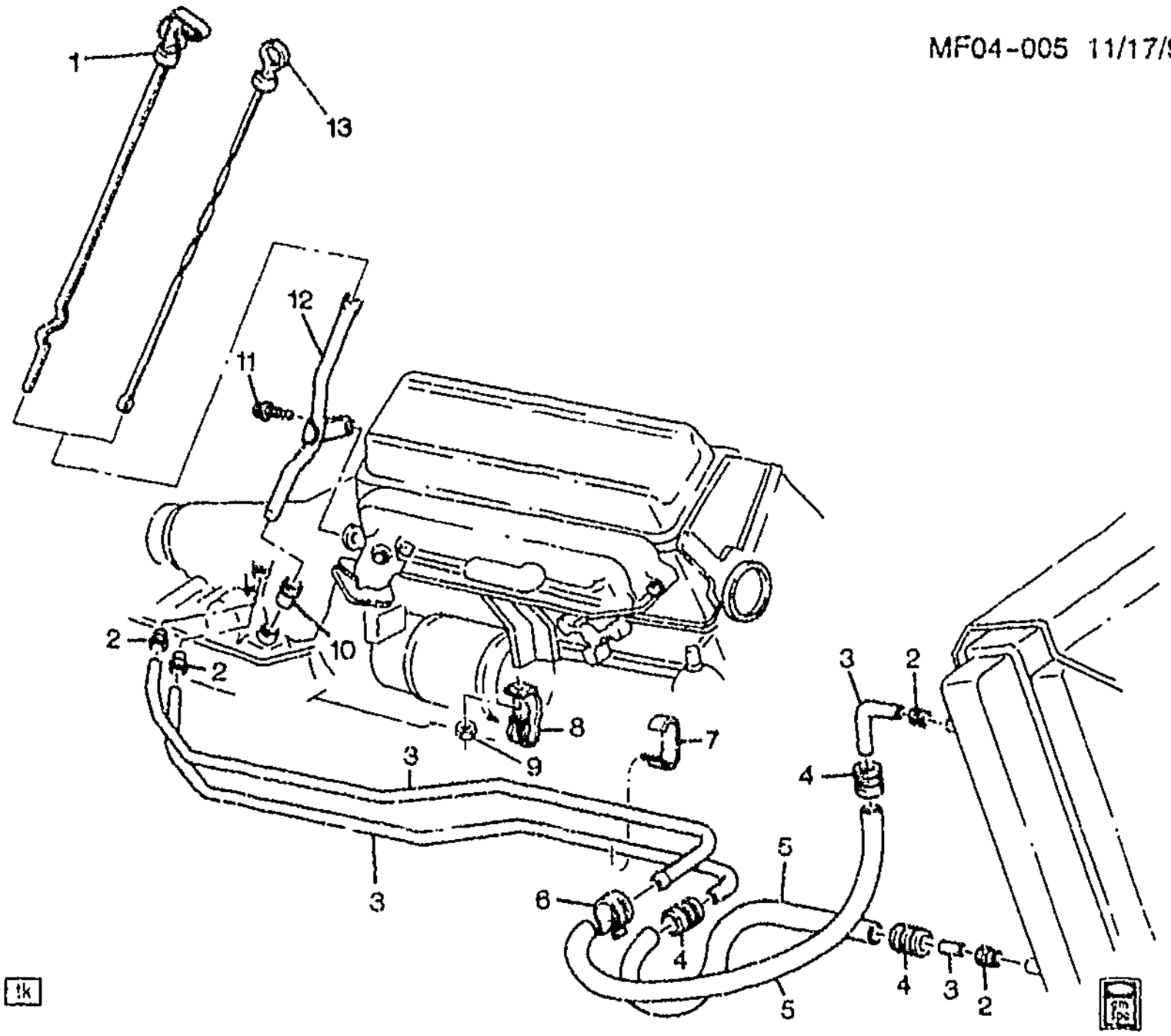

MF04-005

1994-1995 F FILLER TUBE & OIL COOLER PIPES (LT1,L32,M30)
1996-1997 F FILLER TUBE & OIL COOLER PIPES (LT1,M30)

1.	6-A22	4.133	INDICATOR, TRANS FLUID LVL (L-SHAPED HDL)	94-97	F (LT1, M30, B4C, 1LE)	1	12560230
2.		8.963	NUT, INVTD FLRD TUBE, 5/16, 1/2-20, .62 LNG (4.128)	94-97		4	15725180
3.		8.964	TUBING, SERVICE 5/16" COILED STEEL (25FT)	94-97		AR	12541500
4.		8.948	CLAMP, SIZE 6, .30MIN. - .87MAX - HEX/SLOTTED	94-97		3	15620999
5.		8.962	HOSE 7.9 MM X 3050 MM LGTH +/- 30.48 MM, BULK, GM6260-M (AC-DELCO #12339996)	94-97		AR	12339996
6.		8.948	CLAMP, SIZE 6, .30MIN. - .87MAX - HEX/SLOTTED (TRANS OIL CLR UPR HOSE)	94-97		1	15620999
7.	6-A21	4.128	CLIP, TRANS FLUID CLR PIPE	94-97	F (M30)	1	10225624
8.	6-A21	4.128	CLIP, TRANS FLUID CLR PIPE	94-95	F (L32, M30)	1	14027939
		4.128	BRACKET, TRANS FLUID CLR PIPE (WINGED TAB)	94-97	F (LT1, M30)	1	10168540
9.		8.917	NUT, HFX, 1/4-20X.234, 284M, 69K, POR, 240 (OIL PAN)	94-97		1	9439915

cardiagn.com

							MF04-005
10.	6-A22	4.133	SEAL, TRANS FLUID FIL TUBE (AC-DELCO #1259475)	94-97	F (M30)	1	1259475
11.	6-A16	4.085	BOLT, TRANS (TRANS TO ENG) (HFH 3/8-16X1.38 280M PZOR) (8.900)	94-97	F (LT1, M30)	4	9439918
12.	6-A22	4.133	TUBE, TRANS FLUID FIL	94-95	F (L32, M30)	1	10241564
	6-A22	4.133	TUBE, TRANS FLUID FIL	94-97	F (LT1, M30)	1	12550136
13.	6-A22	4.133	INDICATOR, TRANS FLUID LVL (LOOP-SHAPED HDL)	94-95	F (L32, M30)	1	12550781
	6-A22	4.133	INDICATOR, TRANS FLUID LVL (LOOP-SHAPED HDL)	94-97	F (LT1, M30) (EXC B4C, 1LE)	1	12560211

RPO DEFINITIONS

B4C – PACKAGE SPECIAL SERVICE
LT1 – ENGINE-GAS, 8 CYL, 5.7L(5.7P),MFI,HO
L32 – ENGINE,3.4L,V6,(3.4S),SFI,OHV
M30 – TRANSMISSION,AUTOMATIC 4 SPEED,4L60E,ELECTRONIC
1LE – PERFORMANCE PACKAGE COMPONENTS

cardiagn.com

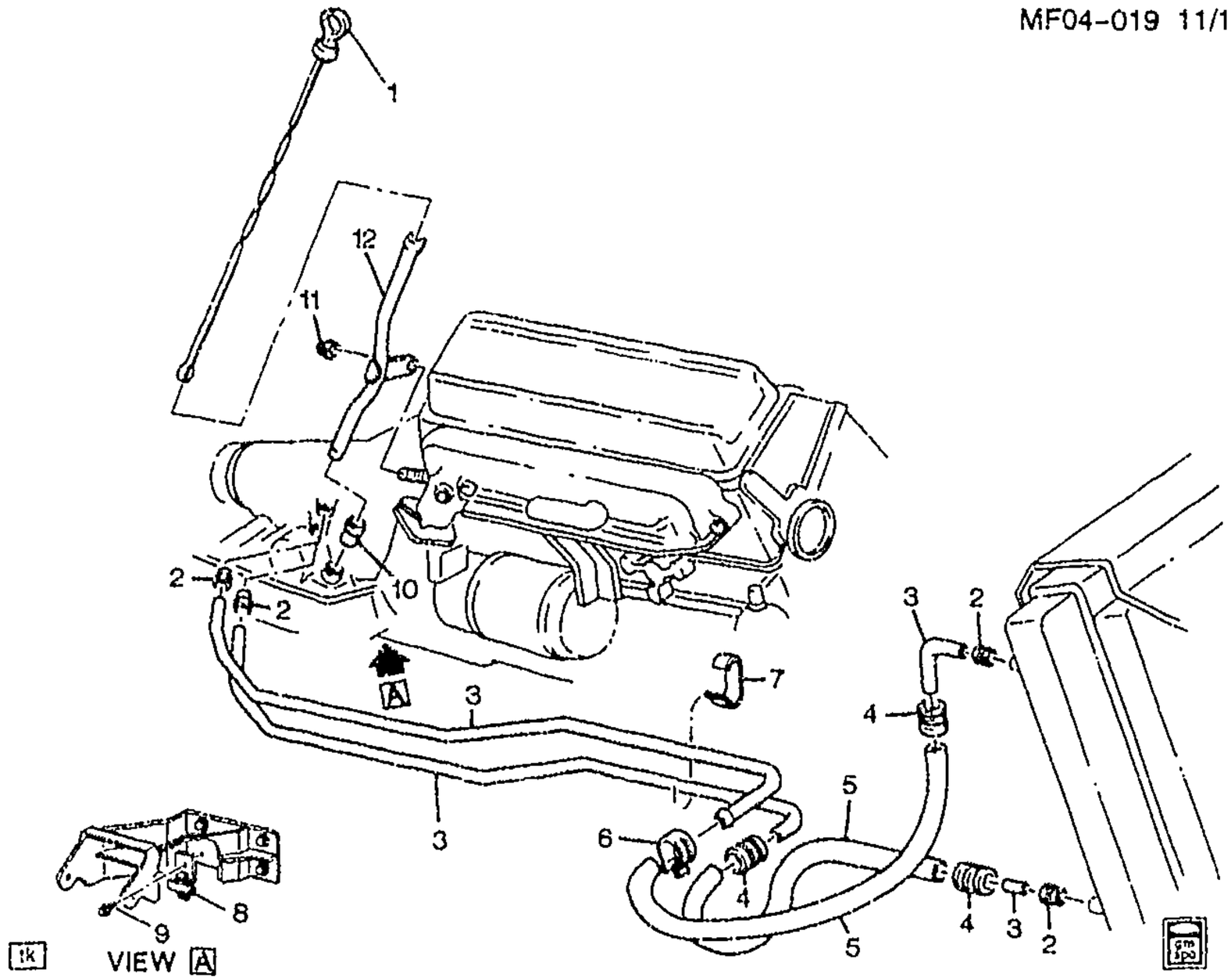

MF04-019

1995-1997 F FILLER TUBE & OIL COOLER PIPES (L36,M30)

1.	6-A22	4.133	INDICATOR, TRANS FLUID LVL (LOOP-SHAPED HDL)	95-97	F (L36, M30)	1	12560211
2.		8.963	NUT, INVTD FLRD TUBE, 5/16, 1/2-20, .62 LNG (4.128)	95-97	.....	4	15725180
3.		8.964	TUBING, SERVICE 5/16" COILED STEEL (25FT)	95-97	.....	AR	12541500
4.		8.948	CLAMP, SIZE 6, .30MIN. - .87MAX - HEX/SLOTTED	95-97	F	3	15620999
5.		8.962	HOSE, 7.9 MM X 3050 MM LGTH +/- 30.48 MM, BULK, GM6260-M (AC-DELCO #12339996)	95-97	.....	AR	12339996
6.		8.948	CLAMP, SIZE 6, .30MIN. - .87MAX - HEX/SLOTTED (TRANS OIL CLR UPR HOSE) ...	95-97	.....	1	15620999
7.	6-A21	4.128	CLIP, TRANS FLUID CLR PIPE ...	95-97	F (M30)	1	10225624
8.	6-A21	4.128	BRACKET, TRANS FLUID CLR PIPE	95-97	F (L36, M30)	1	10243570
9.		8.977	SCREW, HEX W/FLAT WA (TRANS FLUID CLR PIPE BRKT) .	95-97	.....	1	12337828
10.	6-A22	4.133	SEAL, TRANS FLUID FIL TUBE (AC-DELCO #1259475)	95-97	F (M30)	1	1259475

cardiagn.com

							MF04-019
11.		8.917	NUT, HFH, M8X1.25, 17.9 OD, 738 THK, 13MM HEX, 10, ZF (TRANS FLUID FIL TUBE) (8.915) (AC-DELCO #11514596)	95-97	.....	1	11514596
12.	6-A22	4.133	TUBE, TRANS FLUID FIL	95-97	F (L36, M30)	1	10244741

RPO DEFINITIONS

L36 -- ENGINE GAS, 6 CYL, 3.8K, MFI, V6, HO (ERV6 SERIES)

M30 -- TRANSMISSION,AUTOMATIC 4 SPEED,4L60E,ELECTRONIC

cardiagn.com

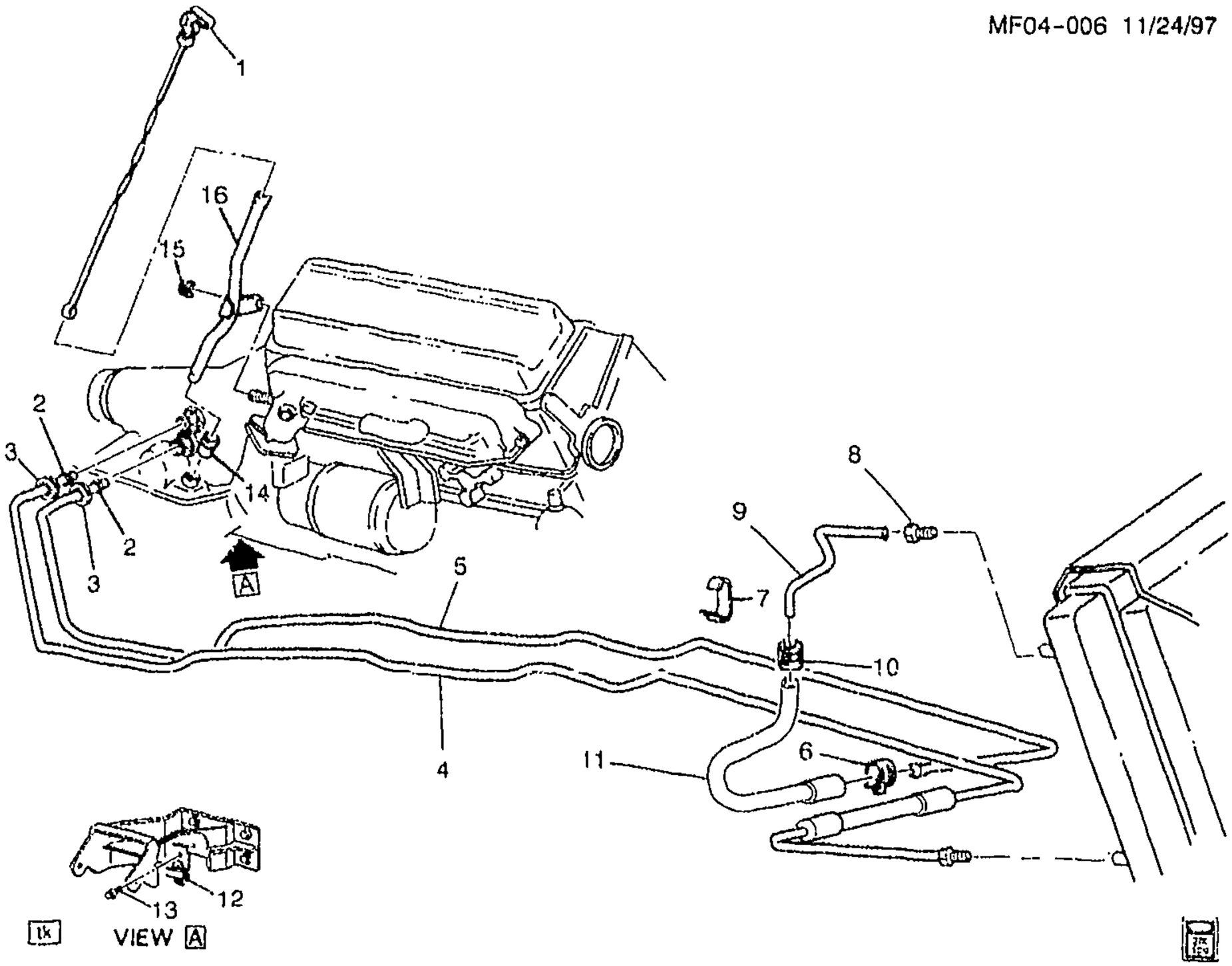

MF04-006

1998-2002 F FILLER TUBE & OIL COOLER PIPES (L36,M30)

1.	6-A22	4.133	INDICATOR, TRANS FLUID LVL (L-SHAPED HDL)	98-02	F (L36, M30)	1	12560230
2.	6-A21	4.128	CAP, TRANS FLUID CLR PIPE CONN (PART OF 4, 5) (PLASTIC RETAINER)	98-99	F (M30)	1	15724706
	6-A21	4.128	CAP, TRANS FLUID CLR PIPE CONN (PART OF 4, 5)	00-02	F (M30)	1	15052228
3.		N.S.	RETAINER, TRANS FLUID CLR PIPE (PART OF 4, 5)		.....		
4.	6-A21	4.128	HOSE, TRANS FLUID CLR LWR (INCLS 2, 3)	98-02	F (L36, M30)	1	10278608
5.	6-A21	4.128	PIPE, TRANS FLUID CLR UPR (INCLS 2, 3)	98-02	F (L36, M30)	1	10278606
6.		8.948	CLAMP, SIZE 6, 30MIN. - .87MAX - HEX/SLOTTED (TRANS OIL CLR UPR HOSE) ...	98-02	....	1	15620999
7.	6-A21	4.129	CLIP, TRANS FLUID CLR PIPE ...	98-02	F (M30)	1	10225624
8.		8.963	NUT, INVTD FLRD TUBE, 5/16, 1/2-20, .62 LNG (4.128)	98-02	....	4	15725180

cardiagn.com

9.		8.964	TUBING, SERVICE 5/16" COILED STEEL (25FT)	98-02		AR	12541500
10.		8.948	CLAMP, SIZE 6, .30MIN. - .87MAX - HEX/SLOTTED	98-02	F	3	15620999
11.		8.962	HOSE, 7.9 MM X 3050 MM LGTH +/- 30.48 MM, BULK, GM6260-M (AC-DELCO #12339996)	98-02		AR	12339996
12.	6-A21	4.128	BRACKET, TRANS FLUID CLR PIPE	98-02	F (L36, M30)	1	10243570
13.		8.977	SCREW, HEX W/FLAT WA (TRANS FLUID CLR PIPE BRKT)	98-02		1	12337828
14.	6-A22	4.133	SEAL, TRANS FLUID FIL TUBE (AC-DELCO #1259475)	98-02	F (M30)	1	1259475
15.		8.917	NUT, HFH, M8X1.25, 17.9 OD, 738 THK, 13MM HEX, 10, ZF (TRANS FLUID FIL TUBE) (8.915) (AC-DELCO #11514596)	98-02		1	11514596
16	6-A22	4.133	TUBE, TRANS FLUID FIL	98-02	F (L36, M30)	1	10244741

RPO DEFINITIONS
L36 - ENGINE GAS, 6 CYL, 3.8K, MFI, V6, HO (ERV6 SERIES)
M30 - TRANSMISSION,AUTOMATIC 4 SPEED,4L60E,ELECTRONIC

cardiagn.com

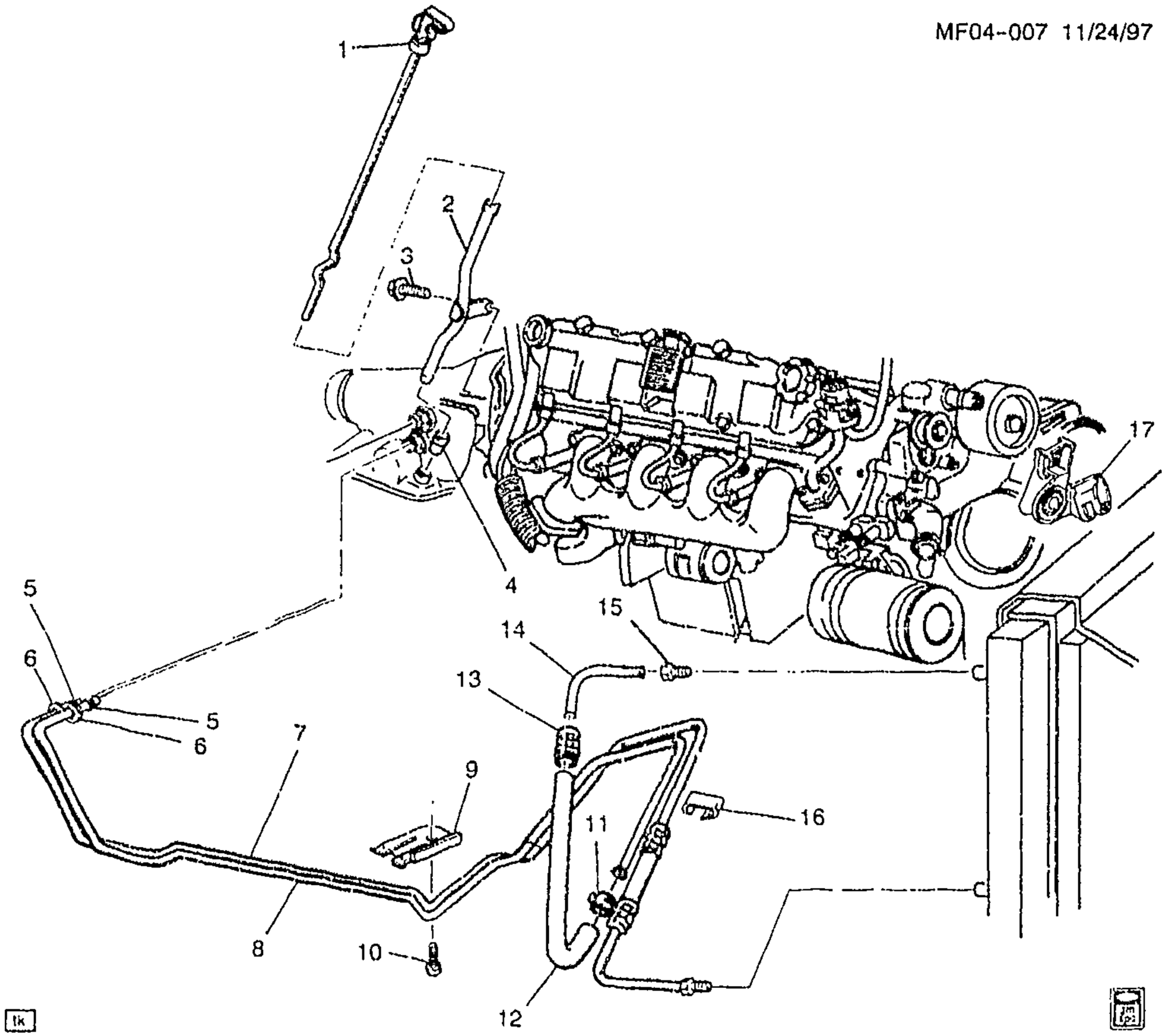

MF04-007

1998-2002 F FILLER TUBE & OIL COOLER PIPES (LS1,M30)

1.	6-A22	4.133	INDICATOR, TRANS FLUID LVL (L-SHAPED HDL)	98-02	F (LS1, M30)	1	12560267
2.	6-A22	4.133	TUBE, TRANS FLUID FIL	98-02	F (LS1, M30)	1	12552595
3.		8.900	BOLT, M10X1.5X20, 18 THD, 22.3 OD, 10.9 MAT (TRANS FLUID FIL TUBE)	98-02	.....	1	11515764
4.	6-A22	4.133	SEAL, TRANS FLUID FIL TUBE (AC-DELCO #1259475)	98-02	F (M30)	1	1259475
5.	6-A21	4.128	CAP, TRANS FLUID CLR PIPE CONN (PART OF 7, 8) (PLASTIC RETAINER)	98-99	F (M30)	1	15724706
	6-A21	4.128	CAP, TRANS FLUID CLR PIPE CONN (PART OF 7, 8)	00-02	F (M30)	1	15052228
6.		N.S.	RETAINER, TRANS FLUID CLR PIPE (PART OF 7, 8)		.....		

cardiagn.com

7.	6-A21	4.128	PIPE, TRANS FLUID CLR UPR (INCLS 5, 6)	98-02	F (LS1, M30)	1	10271556
8.	6-A21	4.128	HOSE, TRANS FLUID CLR LWR (INCLS 5, 6)	98-02	F (LS1, M30)	1	10271560
9.	6-A21	4.128	BRACKET, TRANS FLUID CLR PIPE	98-02	F (LS1, M30)	RH	10405604
10.		8.900	BOLT-METRIC HEAVY HEX FLANGE HEAD, M6X1X12 (TRANS FLUID CLR PIPE BRKT)	98-02	F	1	11516061
11.		8.948	CLAMP, SIZE 6, .30MIN. - .87MAX - HEX/SLOTTED (TRANS OIL CLR UPR HOSE)	98-02		1	15620999
12.		8.962	HOSE, 7.9 MM X 3050 MM LGTH +/- 30.48 MM, BULK, GM6260-M (AC-DELCO #12339996)	98-02		AR	12339996
13.		8.948	CLAMP, SIZE 6, .30MIN. -- .87MAX - HEX/SLOTTED	98-02	F	3	15620999
14.		8.964	TUBING, SERVICE 5/16" COILED STEEL (25FT)	98-02		AR	12541500
15.		8.963	NUT, INVTD FLRD TUBE, 5/16, 1/2-20, .62 LNG (4.128)	98-02		4	15725180
16.	6-A21	4.128	CLIP, TRANS FLUID CLR PIPE	98-02	F (M30)	1	10225624
17.	6-A21	4.128	BRACKET, TRANS FLUID CLR PIPE	98-02	F (LS1, M30)	LH	10402187

RPO DEFINITIONS
LS1 -- ENGINE GAS, 8 CYL, 5.7L, SFI, ALUMINUM ENGINE
M30 - TRANSMISSION,AUTOMATIC 4 SPEED,4L60E,ELECTRONIC

cardiagn.com

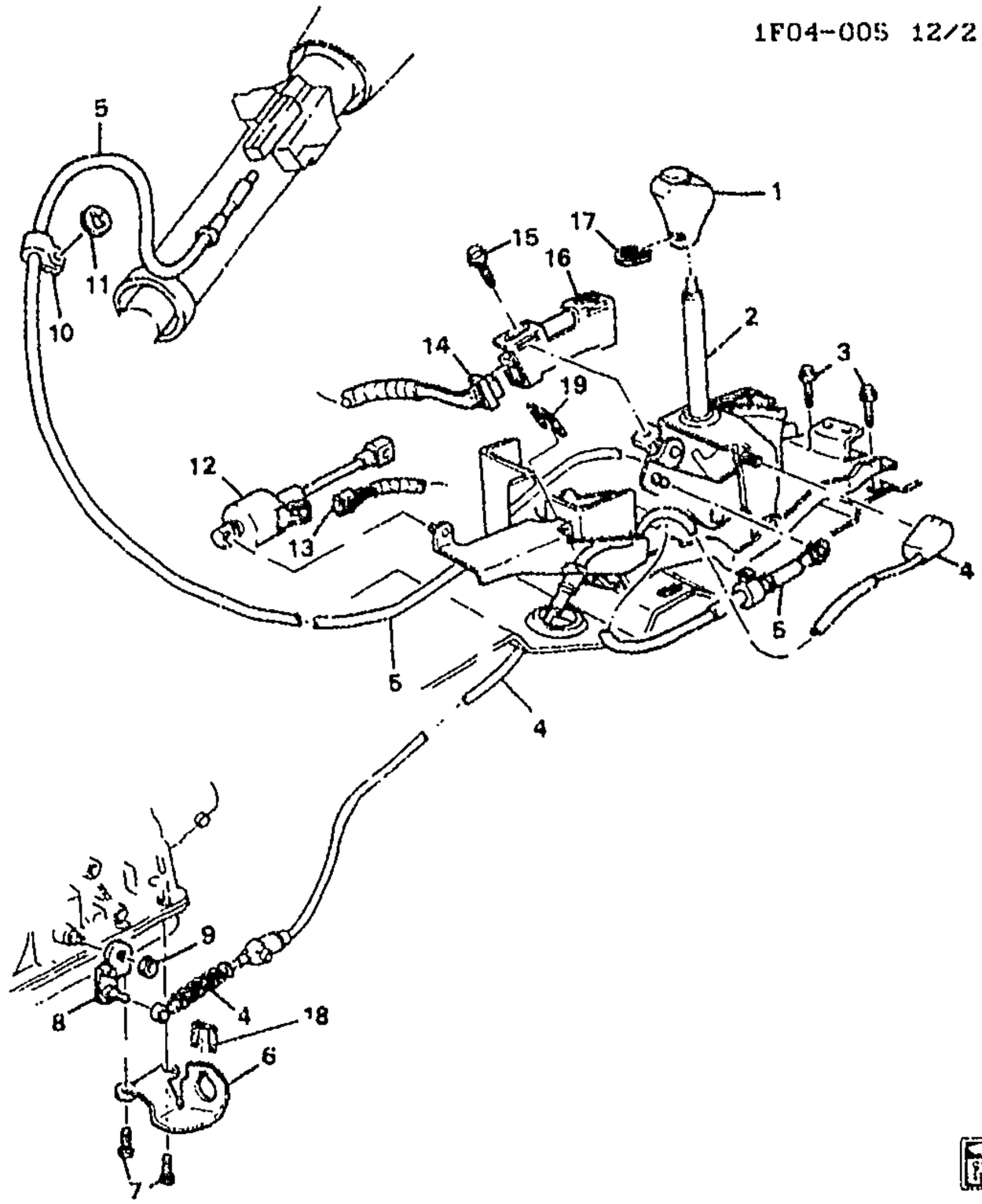

1F04-005

1993 F SHIFT CONTROL/AUTOMATIC TRANSMISSION (MD8)
1994-2002 F SHIFT CONTROL/AUTOMATIC TRANSMISSION (M30)

1.	6-A12	4.006	KNOB, A/TRNS CONT LVR (VINYL)	93-99	F (NP5)	1	10079809
	6-A12	4.006	KNOB, A/TRNS CONT LVR (VINYL)	93-00	F (NK3)	1	10111639
	6-A12	4.006	KNOB, A/TRNS CONT LVR (VINYL)	00	F (M30, NK3)	1	10163833
	6-A12	4.006	KNOB, A/TRNS CONT LVR (VINYL)	00-02	F (M30, NP5)	1	12563173
	6-A12	4.006	KNOB, A/TRNS CONT LVR (VINYL)	01-02	F (M30, NK3	1	22680651
2.	6-A11	4.004	CONTROL, A/TRNS (INCLS 12)	93	F (LT1, MD8, GU5)	1	12558643
	6-A11	4.004	CONTROL, A/TRNS (INCLS 12)	93	F (L32, MD8)	1	12558643
	6-A11	4.004	CONTROL, A/TRNS (INCLS 12)	93	F (LT1, MD8, GU2)	1	12558644
	6-A11	4.004	CONTROL, A/TRNS (INCLS 12)	94-96	F (LT1, M30, GU5)	1	12558643
	6-A11	4.004	CONTROL, A/TRNS (INCLS 12)	94-95	F (L32, M30)	1	12558643
	6-A11	4.004	CONTROL, A/TRNS (INCLS 12)	94-96	F (LT1 M30, GU2)	1	12558644
	6-A11	4.004	CONTROL, A/TRNS (INCLS 12)	95-96	F (L36, M30)	1	12553643

cardiagn.com

	6-A11	4.004	CONTROL, A/TRNS (INCLS 12)	97	F (LT1, M30, GU2)	1	12557388
	6-A11	4.004	CONTROL, A/TRNS (INCLS 12)	97	F (LT1, M30, GU5)	1	12558304
	6-A11	4.004	CONTROL, A/TRNS (INCLS 12)	97	F (L36, M30)	1	12558304
	6-A11	4.004	CONTROL, A/TRNS (INCLS 12)	98-02	F (LS1, L36, M30)	1	12558304
3.		8.977	SCREW, HEX W/FLAT WA (A/TRNS CONT)	93-02		4	12337828
4.	6-A13	4.047	CABLE, A/TRNS RANGE SEL LVR (10MM PIN BALL DIA AT TRANS END)	96-02	F (M30)	1	12558306
	6-A13	4.047	CABLE, A/TRNS RANGE SEL LVR (IF USE IN PLC OF CABLE 12551498, ALSO USE LEVER 12554126) (10MM PIN BALL DIA AT TRANS END)	93	F (MD8)	1	12558306
	6-A13	4.047	CABLE, A/TRNS RANGE SEL LVR (IF USE IN PLC OF CABLE 12551498, ALSO USE LEVER 12554126) (10MM PIN BALL DIA AT TRANS END)	94-95	F (M30)	1	12558306
5.	6-A13	4.047	CABLE, A/TRNS PK LK	93	F (MD8)	1	12555250
	6-A13	4.047	CABLE, A/TRNS PK LK	94-02	F (M30)	1	12555250
6.	6-A13	4.047	BRACKET, A/TRNS RANGE SEL LVR CBL	93	F (MD8)	1	10174452
	6-A13	4.047	BRACKET, A/TRNS RANGE SEL LVR CBL	94-02	F (M30)	1	10174452
7.		8.900	BOLT, HWH, M8X1.25X40, SPL FULLTHD, AC PT, 10.9 PZOR (A/TRNS RANGE SEL LVR CBL BRKT)	93-02		2	11515758
8.		DISCON	LEVER, A/TRNS RANGE SEL (ID BY 6MM PIN BALL)	93	F (MD8)	1	10174453
	6-A12	4.045	LEVER, A/TRNS RANGE SEL (ID BY 10MM PIN BALL) (USE ONLY W/12554125 CABLE, WHEN 12554125 CABLE IS USED IN PLACE OF 12551498)	93	F (MD8)	1	12554126
		DISCON	LEVER, A/TRNS RANGE SEL (ID BY 6MM PIN BALL)	94	F (M30)	1	10174453
	6-A12	4.045	LEVER, A/TRNS RANGE SEL (ID BY 10MM PIN BALL) (USE ONLY W/12554125 CABLE, WHEN 12554125 CABLE IS USED IN PLACE OF 12551498)	94	F (M30)	1	12554126
		DISCON	LEVER, A/TRNS RANGE SEL (ID BY 6MM PIN BALL)	95	F (M30) (1ST DES)	1	10174453
	6-A12	4.045	LEVER, A/TRNS RANGE SEL (ID BY 10MM PIN BALL)	95	F (M30) (2ND DES)	1	12554126
	6-A12	4.045	LEVER, A/TRNS RANGE SEL (ID BY 10MM PIN BALL)	96-02	F (M30)	1	12554126
9.		8.915	NUT, HFH, 10X1 5 6H THD, 21.3 OD, 9.8 THK 13 HEX DR, GRD 9, ZF (A/TRNS RANGE SEL LVR) (8.917)	93-02		1	10255857
10.		8.950	CLIP, CLSD STEEL 7/16 X 5/16 ZC TYP1 NAT (A/TRNS PK LK CBL) (3.880)	93-02		1	25526629

cardiagn.com

11.		8.921	NUT, METRIC PUSH-ON BOLT RETAINING SPRING (A/TRNS PK LK CBL)	93-02		1	10008923
12.	6-A14	4.053	SOLENOID, A/TRNS SHFT LK CONT (PART OF 2) (AC-DELCO #12538778)	93	F (MD8)	1	12538778
	6-A14	4.053	SOLENOID, A/TRNS SHFT LK CONT (PART OF 2) (AC-DELCO #12538778)	94-02	F	1	12538778
13.	6-A14	4.053	CONNECTOR, SOL-A/TRNS SHFT LK CONT (WHITE) (2-WAY F, W/LEADS) (2.535) (AC-DELCO #PT249)	93	F (MD8)	1	12101857
	6-A14	4.053	CONNECTOR, SOL-A/TRNS SHFT LK CONT (GRAY) (2-WAY F W/LEADS) (INDEX TAB CTR CAVITY A&B) (2.535) (AC-DELCO #PT217)	94-02	F	1	12101825
	6-A14	4.053	CONNECTOR, SOL-A/TRNS SHFT LK CONT (WHITE) (2-WAY F, W/LEADS) (2.535) (AC-DELCO #PT249)	97-99	F (MM6)	1	12101857
	6-A14	4.053	CONNECTOR, SOL-A/TRNS SHFT LK CONT (2 WAY F) (W/LEADS) (4.463) (AC-DELCO #PT1312)	00	F (LS1, MM6)	1	15306152
14.	6-A14	4.054	CONNECTOR, SW-PARK/NEU POSN (6 CAV F) (AC-DELCO #PT512)	93	F (MD8)	1	12117379
	6-A14	4.054	CONNECTOR, SW-PARK/NEU POSN (6 CAV F) (AC-DELCO #PT512)	94-02	F	1	12117379
15.		8.977	BOLT-SCREW, M4.2X1.41X13, 5.4 THD, 12.5 OD, GM6172M, GM6138M (PARK/NEU POSN SW)	93-02		2	15714277
16.	6-A14	4.054	SWITCH, PARK/NEU POSN (2.698) (AC-DELCO #D2234)	93	F (MD8)	1	1994223
	6-A14	4.054	SWITCH, PARK/NEU POSN (2.698) (AC-DELCO #D2234)	94-02	F (M30)	1	1994223
17.	6-A12	4.006	RETAINER, A/TRNS CONT LVR HDL	93	F (MD8)	1	10028352
	6-A12	4.006	RETAINER, A/TRNS CONT LVR HDL	94-02	F (M30)	1	10028352
18.	6-A13	4.047	RETAINER, A/TRNS RANGE SEL LVR CBL (AT TRANS END)	95-02	F	1	12555730
19.	6-A13	4.047	RETAINER, A/TRNS RANGE SEL LVR CBL	95-02	F	1	12554182

RPO DEFINITIONS
GU2 - AXLE,REAR,2.73 RATIO
GU5 - AXLE,REAR,3.23 RATIO
LS1 - ENGINE GAS, 8 CYL, 5.7L, SFI, ALUMINUM ENGINE
LT1 - ENGINE-GAS, 8 CYL, 5.7L(5.7P),MFI,HO
L32 - ENGINE,3.4L,V6,(3.4S),SFI,OHV
L36 - ENGINE GAS, 6 CYL, 3.8K, MFI, V6, HO (ERV6 SERIES)
MD8 - TRANSMISSION,AUTOMATIC 4-SPEED(THM700R4/4L60)
MM6 - TRANSMISSION MAN 6 SPD, BORG WARNER, 85MM, 1ST 2.66, 6TH 0.50, O/D
M30 - TRANSMISSION,AUTOMATIC 4 SPEED 4L60E,ELECTRONIC

cardiagn.com

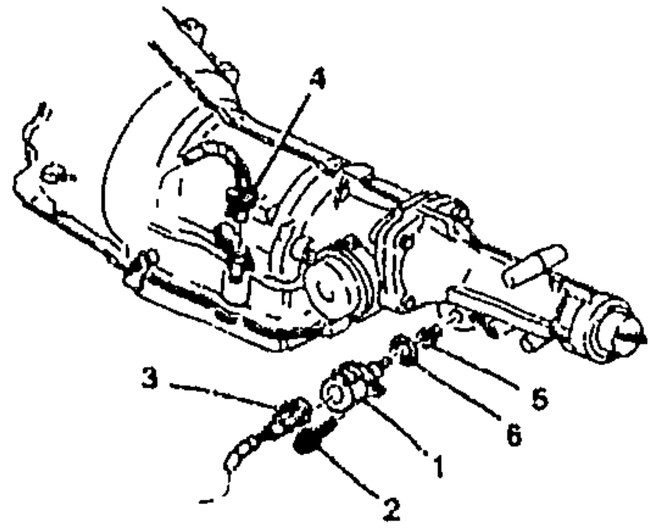

(MD8)

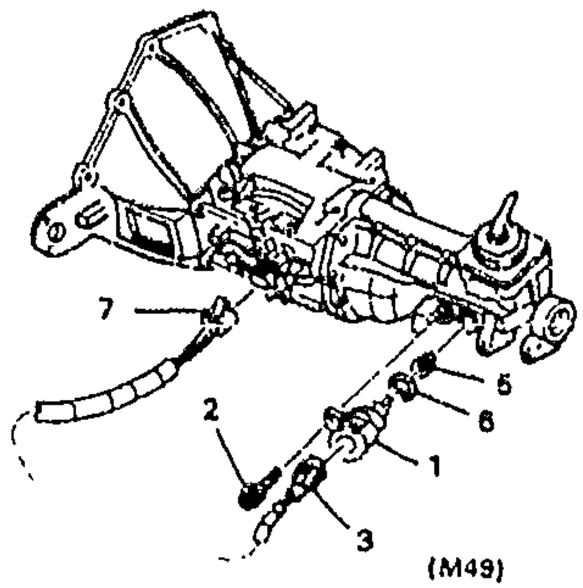

(M49)

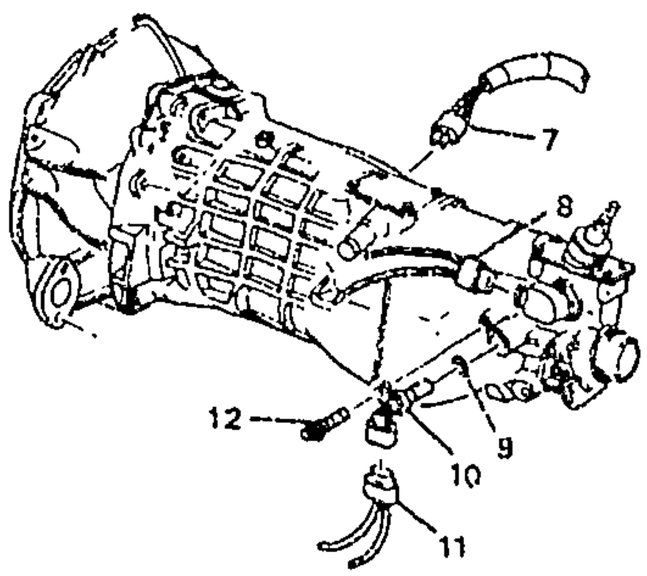

(M28, M29)

MF04-020

1993 F SPEED SENSOR/TRANSMISSION

1.	6-N27	4.329	SENSOR, VEH SPD (INCLS 6) (W/ O-RING) (AC-DELCO #213-197)	93 F (D8N)	1	10456088
	6-N27	4.329	SENSOR, VEH SPD (INCLS 6) (W/ O-RING) (AC-DELCO #213-198)	93 F (D8I)	1	10456089
	6-C8	4.329	SENSOR, VEH SPD (INCLS 6) (AC-DELCO #213-201)	93 F87 (D8A)	1	10456131
	6-C8	4.329	SENSOR, VEH SPD (INCLS 6) (AC-DELCO #213-202)	93 F87 (D8B)	1	10456132

cardiagn.com

2.		8.900	BOLT, HEX W/CON WA M6X1X15 9.8 PZOR 12.5-OD FULL THD (VEH SPD SEN RET) (AC-DELCO #8639743)	93	.....	1	8639743
3.	6-N23	3.682	CONNECTOR, SEN-VEH SPD (TERMINALS SEE 12102664) (2-WAY F) (W/LEADS) (USE ON FOG LAMPS W/ 90 DEGREE BENT TERMINALS FOR STRAIGHT) (2.530) (AC-DELCO #PT120)	93	F (MD8, M49)	1	12085498
4.	6-A17	4.115	CONNECTOR, TCC WRG (W/LEADS) (WHITE) (3-WAY MALE, W/LEADS, FEMALE TERM USE 12354970, 16 GA) (2.535) (AC-DELCO #PT143)	93	F (L32, MD8)	1	12085533
	6-A17	4.115	CONNECTOR, TCC WRG (W/LEADS) (BLACK) (5-WAY M) .	93	F (LT1, MD8)	1	12102612
5.	6-C8	4.337	GEAR, SPEEDO DRVN (RED) (37 TEETH) (AC-DELCO #25513044)	93	F (D3W)	1	25513044
	6-C8	4.337	GEAR, SPEEDO DRVN (DK GRAY) (44 TEETH) (AC-DELCO #25513051)	93	F (D5X)	1	25513051
	6-C8	4.337	GEAR, SPEEDO DRVN (BROWN) (18 TEETH) (AC-DELCO #12550928) (ON 1993 MODELS, ALSO REPL SPEEDO DRV GR W/12524068)	93	F (D5R)	1	12550928
6.		N.S.	SEAL, VEH SPD SEN (O RING) (PART OF 1)		....		
7.	6-N22	2.698	CONNECTOR, SW-B/U LP (BLACK) (2-WAY M) (W/LEADS) (2.535) (AC-DELCO #PT107) ...	93	F	1	12085485
8.	6-A14	4.053	CONNECTOR, SOL-A/TRNS SHFT LK CONT (WHITE) (2-WAY F, W/LEADS) (2 535) (AC-DELCO #PT249)	93	F (MD8)	1	12101857
9.	6-C11	4.338	SEAL, VEH SPD SEN (O RING) (PART OF 10) (AC-DELCO #10475299)	93	F (M28, M29)	1	10475299
10.	6-N27 6-N27	4.337	SENSOR, M/TRNS OUTPUT SPD (INCLS 9) (3.682)	93	F (LT1, M28, M29, GU2, GU5)	1	12523306
11.	6-N23	3.682	CONNECTOR, SEN-VEH SPD (BLACK) (2-WAY F W/LEADS) (2.383) (AC-DELCO #PT169) ...	93	F (M28, M29)	1	12101899
12.		N.S.	BOLT, VEH SPD SEN RET (M6X1)		.....		

RPO DEFINITIONS
D3W - GEAR-SPEEDO DRIVEN (25513044)
D5R - GEAR SPEEDO DRIVEN (D5R)
D5X - GEAR--SPEEDO DRIVEN
D8A - SENSOR -- VEH SPD SENSOR
D8B - SENSOR - VEH SPD SENSOR
D8I - SENSOR-VEH SPD (10456089)
D8N -- SENSOR VEH SPD (10456088)
GU2 - AXLE,REAR,2.73 RATIO
GU5 - AXLE,REAR,3.23 RATIO
LT1 - ENGINE-GAS, 8 CYL, 5.7L(5.7P),MFI,HO

cardiagn.com

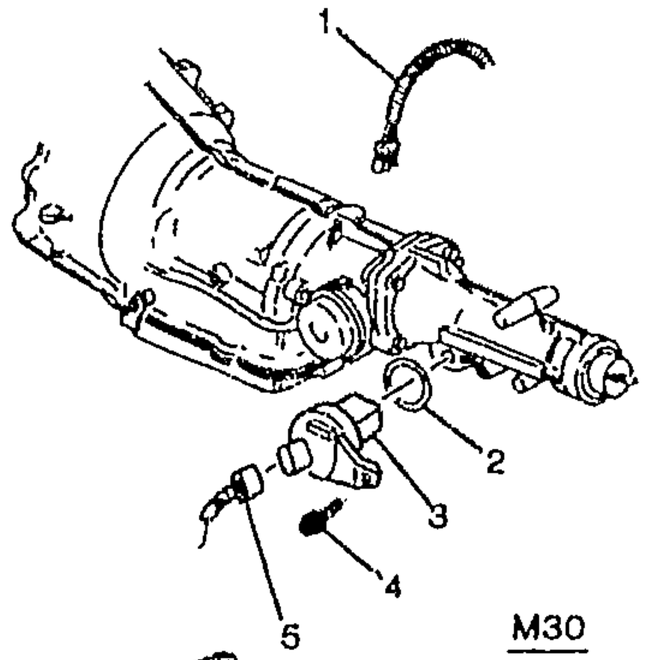

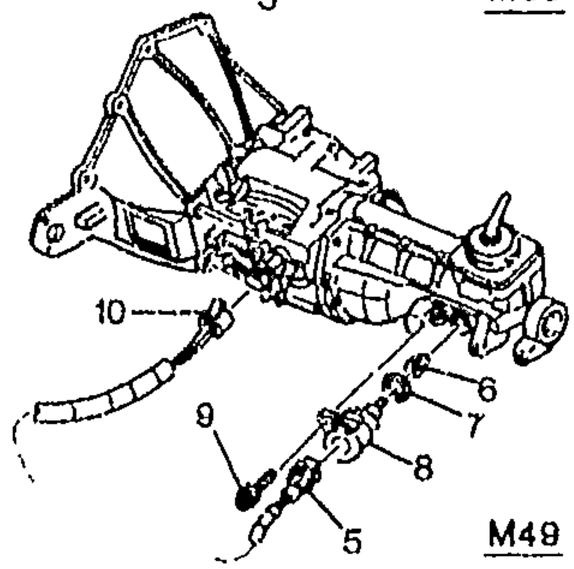

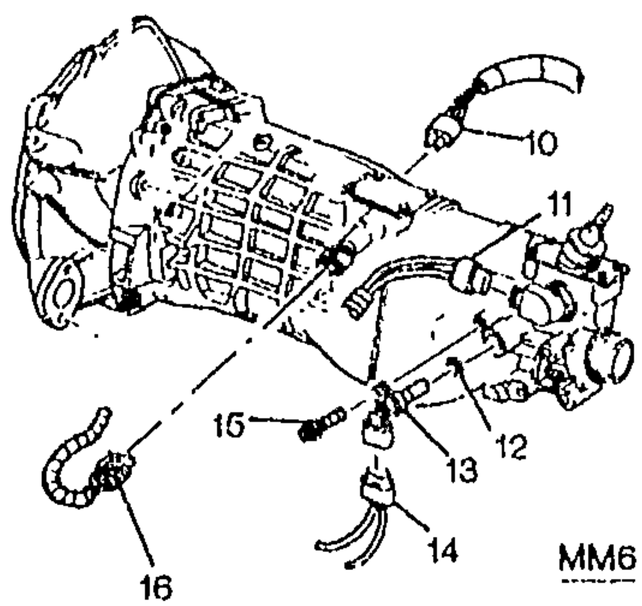

MF04-030

1994-2002 F SPEED SENSOR/TRANSMISSION

1.	6-A14	4.056	CONNECTOR, MDL-TRANS CONT (13-WAY F, W/O LEADS) (2.530)	94-00	F (M30)	1 12160492
	6-A14	4.056	CONNECTOR, MDL-TRANS CONT (13-WAY F, W/O LEADS) (2.530)	01-02	F (L36, M30)	1 12160492
2.	6-C11	4.338	SEAL, VEH SPD SEN (O RING) (PART OF 3) (TEFLON) (AC-DELCO #15552872)	94-95	F (M30)	1 15552872

cardiagn.com

	6–C11	4.338	SEAL, VEH SPD SEN (O RING) (PART OF 3) (AC–DELCO #10475299)	96–02	F (M30)	1	10475299
3.	6–C8	4.329	SENSOR, VEH SPD (INCLS 2) (AC–DELCO #213–194)	94–95	F (M30)	1	8673299
	6–C8	4.329	SENSOR, VEH SPD (INCLS 2) (AC–DELCO #213–328)	96–02	F (M30)	1	10456520
4.	6–C8	4.329	BOLT, VEH SPD SEN	94–95	F (M30)	1	8655314
	6–C8	4.329	BOLT, VEH SPD SEN (M6X1.0X15.0) (AC–DELCO #24200093)	96–02	F (M30)	1	24200093
5.	6–N23	3.682	CONNECTOR, SEN–VEH SPD (TERMINALS SEE 12102664) (2–WAY F) (W/LEADS) (USE ON FOG LAMPS W/ 90 DEGREE BENT TERMINALS FOR STRAIGHT) (2.530) (AC–DELCO #PT120)	94–95	F (M30, M49)	1	12085498
	6–N23	3.682	CONNECTOR, SEN–VEH SPD (BLACK) (2–WAY F W/LEADS) (2.383) (AC–DELCO #PT169) ...	96–02	F (M30, M49)	1	12101899
6.	6–C8	4.337	GEAR, SPEEDO DRVN (BROWN) (18 TEETH) (AC–DELCO #12550928) (ON 94 VEHS, ALSO REPL SPEEDO DRV GR W/12524068)	94–95	F (M49)	1	12550928
		N.S.	GEAR, SPEEDO DRVN (PART OF VEH SPD SENSOR)	96–02	.....		
7.		N.S.	SEAL, VEH SPD SEN (O RING) (PART OF 8)		.....		
8.		4.329	SENSOR, VEH SPD (INCLS 7) ...	94–95	.....		
	6–N27 6–N27	4.337	SENSOR, M/TRNS OUTPUT SPD (INCLS 7) (3.682)	96–02	F (M49)	1	12523306
9.		8.900	BOLT, HEX W/CON WA M6X1X15 9.8 PZOR 12.5–OD FULL THD (VEH SPD SEN RET) (AC–DELCO #8639743)	94–95	(M49)	1	8639743
		8.900	BOLT/SCREW, HFH M6X1X20, 9.8, 7114M, DOG PT, 14.2 OD (VEH SPD SEN)	96–02	(M49)	1	11516398
10.		8.965	CONNECTOR, W/SEAL, 2 WAY WEATHER PACK (SW–B/U LP) (2.535) (AC–DELCO #PT107) ...	94–02	F	1	12085485
11.	6–A14	4.053	CONNECTOR, SOL–A/TRNS SHFT LK CONT (WHITE) (2–WAY F, W/LEADS) (2.535) (AC–DELCO #PT249)	94–02	F (MM6)	1	12101857
12.		N.S.	SEAL, VEH SPD SEN (O RING) (PART OF 13)		.....		
13.	6–N27 6–N27	4.337	SENSOR, M/TRNS OUTPUT SPD (INCLS 12) (3.682)	94–02	F		12523306
14.	6–N23	3.682	CONNECTOR, SEN–VEH SPD (BLACK) (2–WAY F W/LEADS) (2.383) (AC–DELCO #PT169) ...	94–02	F (MM6)	1	12101899

cardiagn.com

15.		8.800	**BOLT/SCREW**, HFH M6X1X20, 9.8, 7114M, DOG PT, 14.2 OD (VEH SPD SEN)	94-02	(MM6)	1	11516398
16.	6-A14	4.053	**CONNECTOR**, SOL-A/TRNS SHFT LK CONT (UPSHIFT) (WHITE) (2-WAY F, W/LEADS) (2.535) (AC-DELCO #PT249) ...	94-02	F (MM6)	1	12101857

RPO DEFINITIONS

L36 – ENGINE GAS, 6 CYL, 3.8K, MFI, V6, HO (ERV6 SERIES)
MM6 – TRANSMISSION MAN 6 SPD, BORG WARNER, 85MM, 1ST 2.66, 6TH 0.50, O/D
M30 – TRANSMISSION,AUTOMATIC 4 SPEED,4L60E,ELECTRONIC
M49 – TRANSMISSION MAN 5 SPD, BORG WARNER, 77MM, 3.75 1ST, .76 5TH, O/D

cardiagn.com

ILLUSTRATION INDEX

	TITLE	GRID
1993–1994	F BRAKE ELECTRICAL SYSTEM/ANTI–LOCK	7–E4
1995–1997	F BRAKE ELECTRICAL SYSTEM/ANTI–LOCK (EXC NW9)	7–E4
1995–1997	F BRAKE ELECTRICAL SYSTEM/ANTI–LOCK(NW9)	7–E7
1998–2002	F BRAKE ELECTRICAL SYSTEM/ANTI–LOCK(EXC NW9)	7–E10
1998–2002	F BRAKE ELECTRICAL SYSTEM/ANTI–LOCK(NW9)	7–E12
1993–1994	F BRAKE HOSES & PIPES (J65)	7–E15
1995–1997	F BRAKE HOSES & PIPES (J65,EXC NW9)	7–E15
1993–1997	F BRAKE HOSES & PIPES (J41)	7–E20
1995–1997	F BRAKE HOSES & PIPES (J65,NW9)	7–E24
1998–2002	F BRAKE HOSES & PIPES (J65,EXC NW9)	7–F2
1998–2002	F BRAKE HOSES & PIPES (J65,NW9)	7–F6
1993	F BRAKE BOOSTER/VACUUM	7–F10
1994–2002	F BRAKE BOOSTER	7–F12
1993–1997	F BRAKE PRESSURE MODULATOR VALVE ABS VI (DELCO)	7–F13
1993–2002	F BRAKE MASTER CYLINDER	7–F15
1993	F BRAKE CALIPER/FRONT (GEN II 64MM)(DELCO)	7–F17
1994–1997	F BRAKE CALIPER/FRONT	7–F19
1998–2002	F BRAKE CALIPER/FRONT	7–F21
1993–1997	F BRAKE CALIPER/REAR (J65)	7–F24
1998–2002	F BRAKE CALIPER/REAR (J65)	7–F27
1993–1997	F WHEEL CYLINDER/DRUM BRAKE (DELCO)(J41)	7–G2
1993–2002	F BRAKE PEDAL & MASTER CYLINDER MOUNTING	7–G4
1995–1997	F TRACTION CONTROL MODULATOR VALVE (NW9)	7–G9
1993–1996	F PARKING BRAKE SYSTEM (J41)	7–G11
1993–1996	F PARKING BRAKE SYSTEM (J65)	7–G13
1997	F PARKING BRAKE SYSTEM (J41)	7–G15
1997–2002	F PARKING BRAKE SYSTEM (J65)	7–G17
1998–2002	F PARKING BRAKE ASM TO REAR AXLE	7–G19

cardiagn.com

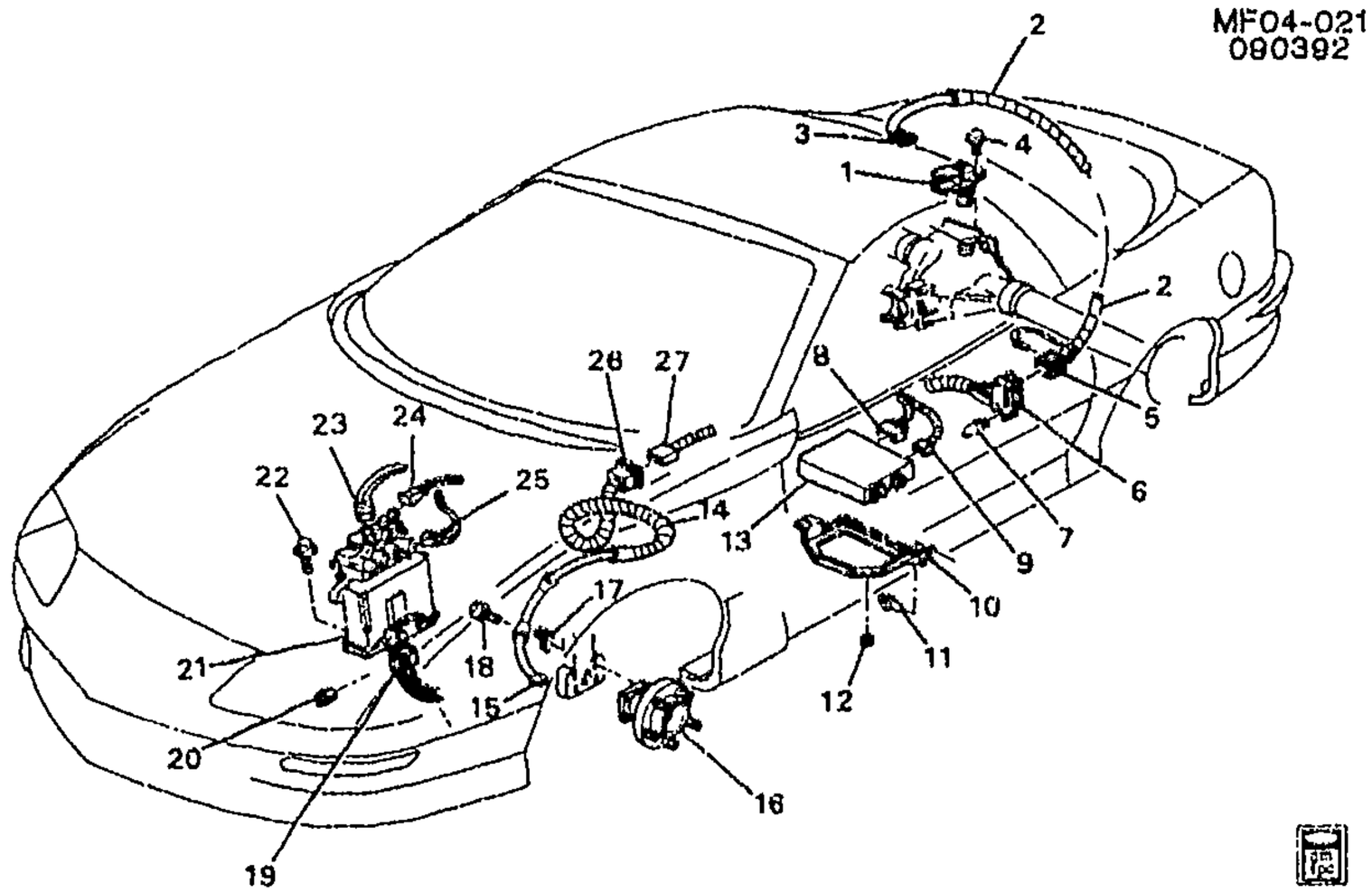

MF04-021

1993-1994 F BRAKE ELECTRICAL SYSTEM/ANTI-LOCK
1995-1997 F BRAKE ELECTRICAL SYSTEM/ANTI-LOCK (EXC NW9)

1.	7-A13	4.710	**SENSOR**, WHL SPD (RR) (AC-DELCO #10456115)	93-94	F	1	10456115
	7-A13	4.710	**SENSOR**, WHL SPD (RR) (AC-DELCO #10456115)	95-97	F (EXC NW9)	1	10456115
2.	7-A15	4.720	**HARNESS**, RR WHL SPD SEN WRG (INCLS 3, 5)	93-94	F	1	12106689
	7-A15	4.720	**HARNESS**, RR WHL SPD SEN WRG (INCLS 3, 5)	95-97	F (EXC NW9)	1	12106689
3.		N.S.	**CONNECTOR**, SEN-WHL SPD (PART OF 2)		.....		
4.		8.900	**BOLT**, HEX W/CON WA M6X1X15 9.8 PZOR 12.5-OD FULL THD (WHL SPD SEN) (AC-DELCO #8639743)	93-97	.....	1	8639743
5.		N.S.	**CONNECTOR**, INLINE-TO ANTILOCK BRK HARN (PART OF 2)		.....		
6.		N.S.	**CONNECTOR**, INLINE-TO F/TNK HARN		.....		
7.		N.S.	**RIVET**, FUEL SDR WRG HARN CONN		.....		
8.	7-A15	4.720	**CONNECTOR**, MDL-ELEK BRK CONT (RED) (32-WAY F) (2.530)	93-97	F	1	12110113
9.	7-A15	4.720	**CONNECTOR**, MDL-ELEK BRK CONT (GRAY) (8-WAY F)	93-97	F	1	12110626
10.	7-A15	4.720	**BRACKET**, ELEK BRK CONT MDL	93-95	F	1	10257099
	7-A15	4.720	**BRACKET**, ELEK BRK CONT MDL	96-97	F	1	10282711

cardiagn.com

11.		8.950	**RETAINER**, FITS .250 HOLE, 1.01LG.700-OD NYLON BLACK (ELEK BRK CONT MDL)	93-97		1	10121502
12.		8.917	**NUT**, HFH, M8X1.25, 17.9 OD, 738 THK, 13MM HEX, 10, ZF (ELECK BRK CONT MDL BRKT) (8.915) (AC-DELCO #11514596)	93-97		1	11514596
13.	7-A15	4.720	**MODULE**, ELEK BRK CONT (REMAN)	93	F	1	16171460
	7-A15	4.720	**MODULE**, ELEK BRK CONT (REMAN)	94	F	1	16184358
	7-A15	4.720	**MODULE**, ELEK BRK CONT (REMAN) (AC-DELCO #16207618)	95	F (EXC NW9)	1	16207618
	7-A15	4.720	**MODULE**, ELEK BRK CONT (AC-DELCO #16220631)	96-97	F (EXC NW9)	1	16220631
14.	7-A15	4.720	**HARNESS**, FRT WHL SPD SEN WRG (INCLS 15, 26)	93-94	F	2	12145049
	7-A15	4.720	**HARNESS**, FRT WHL SPD SEN WRG (INCLS 15, 26)	95-97	F	2	12145732
15.		N.S.	**CONNECTOR**, SEN-WHL SPD (PART OF 14)				
16.	7-D11	6.307	**HUB**, FRT WHL (W/ SPEED SENSOR RING) (LESS ROTOR) (W/SPEED SENSOR) (AC-DELCO #20-86)	93-97	F	2	7470587
17.	7-A15	4.720	**BRACKET**, WHL SPD SEN WIRE	93-96	F	2	18018555
		N.S.	**BRACKET**, WHL SPD SEN WIRE	97			
18.	7-C22	5.812	**BOLT**, FRT WHL HUB (M10X1.5X50 10.9 POR) (8.900)	93-97	F	8	11508355
19.	7-A7	4.663	**CONNECTOR**, MOT-BRK PRESS MOD VLV PUMP (GRAY) (6-WAY F) (W/LEADS) (4.720) (AC-DELCO #PT365)	93-97	F	1	12102698
20.	7-N11	2.559	**RETAINER**, FWD LP WRG HARN CONN (TO ABS HYD MDL)	93-97	F	1	12110292
21.		N.S.	**VALVE**, BRK PRESS MOD (SEE "BRAKE PRESSURE MODULATOR VALVE"ILLUSTRATION IN GRP. 4.000 FOR DETAILED VIEW) (COMPONENT PARTS SERVICED)				
22.		8.900	**BOLT-HEX**, M8X1.25X30, 22 THD, 24MM OD, 9.8, 7114M (BRK PRESS MOD VLV)	93-97		1	11516594
23.	7-A7	4.663	**CONNECTOR**, SW-BRK PRESS DIFF (WHITE) (2-WAY F, W/LEADS) (2.535) (AC-DELCO #PT249)	93-97	F	1	12101857
24.	7-A17	4.730	**CONNECTOR**, SOL-BRK PRESS MOD VLV (BLACK) (2-WAY F W/LEADS) (3.670) (AC-DELCO #PT374)	93-97	F	RH	12102747
25.	7-A17	4.730	**CONNECTOR**, SOL-BRK PRESS MOD VLV (CREAM) (2-WAY F, M/P 150)	93-97	F	LH	12110375

cardiagn.com

							MFG#–027
26.		N.S.	CONNECTOR, INLINE–TO FWD LP HARN (PART OF 14)		... .		
27.	7–A15	4.720	CONNECTOR, INLINE–TO WHL SPD SEN (GREY) (2–WAY F, M/P 150 SLD W/LEADS) (4.710) (AC–DELCO #PT1357)	93–94	F	2	15306302
	7–A15	4.720	CONNECTOR, INLINE–TO WHL SPD SEN (2–WAY M W/O LEADS)	95–97	F	1	12162343

RPO DEFINITIONS
NW9 – TRACTION CONTROL ELECTRONIC

cardiagn.com

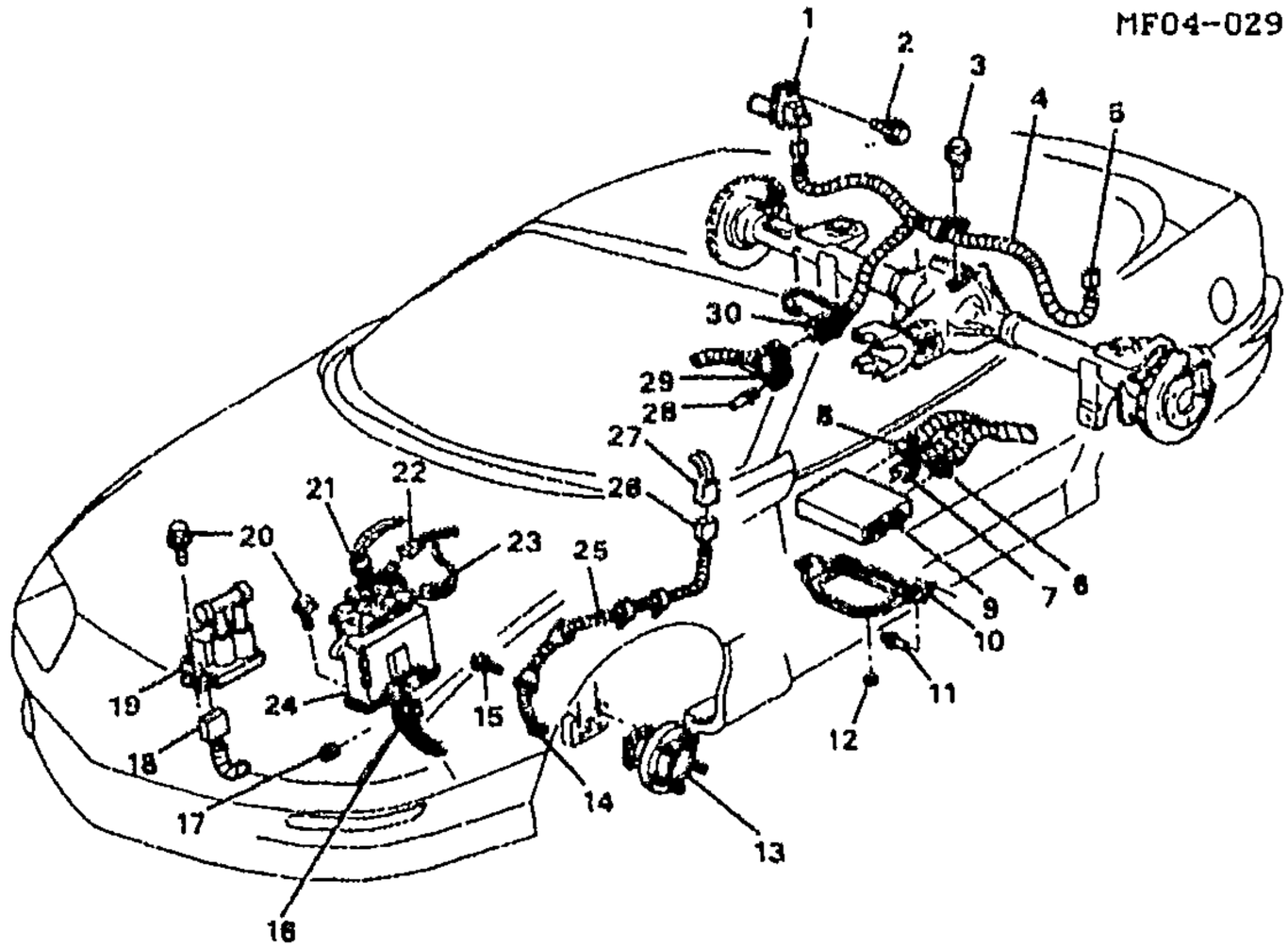

MF04-029

1995--1997 F BRAKE ELECTRICAL SYSTEM/ANTI-LOCK(NW9)

1.	7-A13	4.710	SENSOR, RR WHL SPD (METAL CRIMPED MOUNT TABS) (AC-DELCO #10456264)	95-97	F (NW9)	2	10456264
2.		8.900	BOLT, HEX W/CON WA M6X1X15 9.8 PZOR 12.5-OD FULL THD (WHL SPD SEN) (AC-DELCO #8639743)	95-97		2	8639743
3.		8.977	BOLT, M6X1X13, 10 THD, 12.5 OD (WHL SPD SEN WRG HARN CLIP)	95-97		1	11509699
4.	7-A15	4.720	HARNESS, WHL SPD SEN WRG (INCLS 5, 30)	95	F (LT1, NW9)	1	12113964
	7-A15	4.720	HARNESS, WHL SPD SEN WRG (INCLS 5, 30)	96-97	F (LT1, NW9)	1	12145733
5.		N.S.	CONNECTOR, SEN-WHL SPD (RR) (PART OF 4)				
6.	7-A15	4.720	CONNECTOR, MDL-ELEK BRK CONT (PART OF FWD LP WRG HARN) (GRAY) (8-WAY F)	95-97	F	1	12110626
7.	7-A15	4.720	CONNECTOR, MDL-ELEK BRK CONT (RED) (32-WAY F) (2.530)	95-97	F	1	12110113
8.	7-A15	4.720	CONNECTOR, MDL-ELEK TRACT CONT (BLACK) (8-WAY F, W/O LEADS)	95-97	F (NW9)	1	12129038
9.	7-A15	4.720	MODULE, ELEK BRK & TRACT CONT	95	F (NW9)	1	16199451
	7-A15	4.720	MODULE, ELEK BRK & TRACT CONT (AC-DELCO #16226471)	96	F (NW9)	1	16226471
	7-A15	4.720	MODULE, ELEK BRK & TRACT CONT	97	F (LT1, NW9)	1	16220641

cardiagn.com

10.	7-A15	4.720	**BRACKET**, ELEK BRK CONT MDL	95	F	1	10257099
	7-A15	4.720	**BRACKET**, ELEK BRK CONT MDL	96-97	F	1	10262711
11.		8.050	**RETAINER**, FITS .250 HOLE, 1.01LG.700-OD NYLON BLACK (ELEK BRK CONT MDL (PUSH IN))	95-97		1	10121502
12.		8.917	**NUT**, HFH, M8X1.25, 17.9 OD, 738 THK, 13MM HEX, 10, ZF (ELEK BRK CONT MDL BRKT) (8.915) (AC-DELCO #11514596)	95-97		1	11514596
13.	7-D11	6.307	**HUB**, FRT WHL (LESS ROTOR) (W/SPEED SENSOR) (AC-DELCO #20-86)	95-97	F	2	7470587
14.		N.S.	**CONNECTOR**, SEN-WHL SPD (FRT) (PART OF 25)				
15.	7-C22	5.812	**BOLT**, FRT WHL HUB (M10X1.5X50 10.9 POR) (8.900)	95-97	F	8	11508355
16.	7-A7	4.663	**CONNECTOR**, MOT-BRK PRESS MOD VLV PUMP (GRAY) (6-WAY F) (W/LEADS) (4.720) (AC-DELCO #PT365)	95-97	F	1	12102698
17.	7-N11	2.559	**RETAINER**, FWD LP WRG HARN CONN (TO ABS HYD MDL)	95-97	F	1	12110292
18.		N.S.	**CONNECTOR**, SOL-ELEK TRACT CONT BRK PRESS MOD VLV				
19.	7-A17	4.730	**VALVE KIT**, ELEK TRACT CONT BRK PRESS MOD (SEE "TRACTION CONTROL VALVE"ILLUSTRATION IN GRP. 4.000 FOR DETAILED VIEW.) (AC-DELCO #18029836)	95-97	F (NW9)	1	18029836
20.		8.900	**BOLT-HEX**, M8X1.25X30, 22 THD, 24MM OD, 9.8, 7114M (BRK PRESS MOD VLV)	95-97		1	11516594
21.	7-A7	4.663	**CONNECTOR**, SW-BRK PRESS DIFF (WHITE) (2-WAY F, W/LEADS) (2.535) (AC-DELCO #PT249)	95-97	F	1	12101057
22.	7-A17	4.730	**CONNECTOR**, SOL-BRK PRESS MOD VLV (BLACK) (2-WAY F W/LEADS) (3.670) (AC-DELCO #PT374)	95-97	F	RH	12102747
23.	7-A17	4.730	**CONNECTOR**, SOL-BRK PRESS MOD VLV (PART OF FWD LAMP WRG HARN) (CREAM) (2-WAY F, M/P 150)	95-97	F	LH	12110375
24.		N.S.	**VALVE**, BRK PRESS MOD (SEE "BRAKE PRESSURE MODULATOR VALVE" IN GRP. 4.000 FOR DETAILED VIEW) (COMPONENT PARTS SERVICED)				
25.	7-A15	4.720	**HARNESS**, FRT WHL SPD SEN WRG (INCLS 14, 26)	95-97	F	2	12145732

cardiagn.com

26.		N.S.	**CONNECTOR**, INLINE–TO FWD LP HARN (PART OF 25)		.....		
27.	7–A15	4.720	**CONNECTOR**, INLINE–TO WHL SPD SEN (2–WAY M W/O LEADS)	95–97	F	1	12162343
28.		N.S.	**RIVET**, FUEL SDR WRG HARN CONN		.....		
29.		N.S.	**CONNECTOR**, INLINE–TO F/TNK HARN (PART OF I/P WRG HARN)		.....		
30.		N.S.	**CONNECTOR**, INLINE–TO ANTILOCK BRK HARN (PART OF 4)		.....		

RPO DEFINITIONS
LT1 – ENGINE–GAS, 8 CYL, 5.7L(5.7P),MFI,HO
NW9 – TRACTION CONTROL ELECTRONIC

cardiagn.com

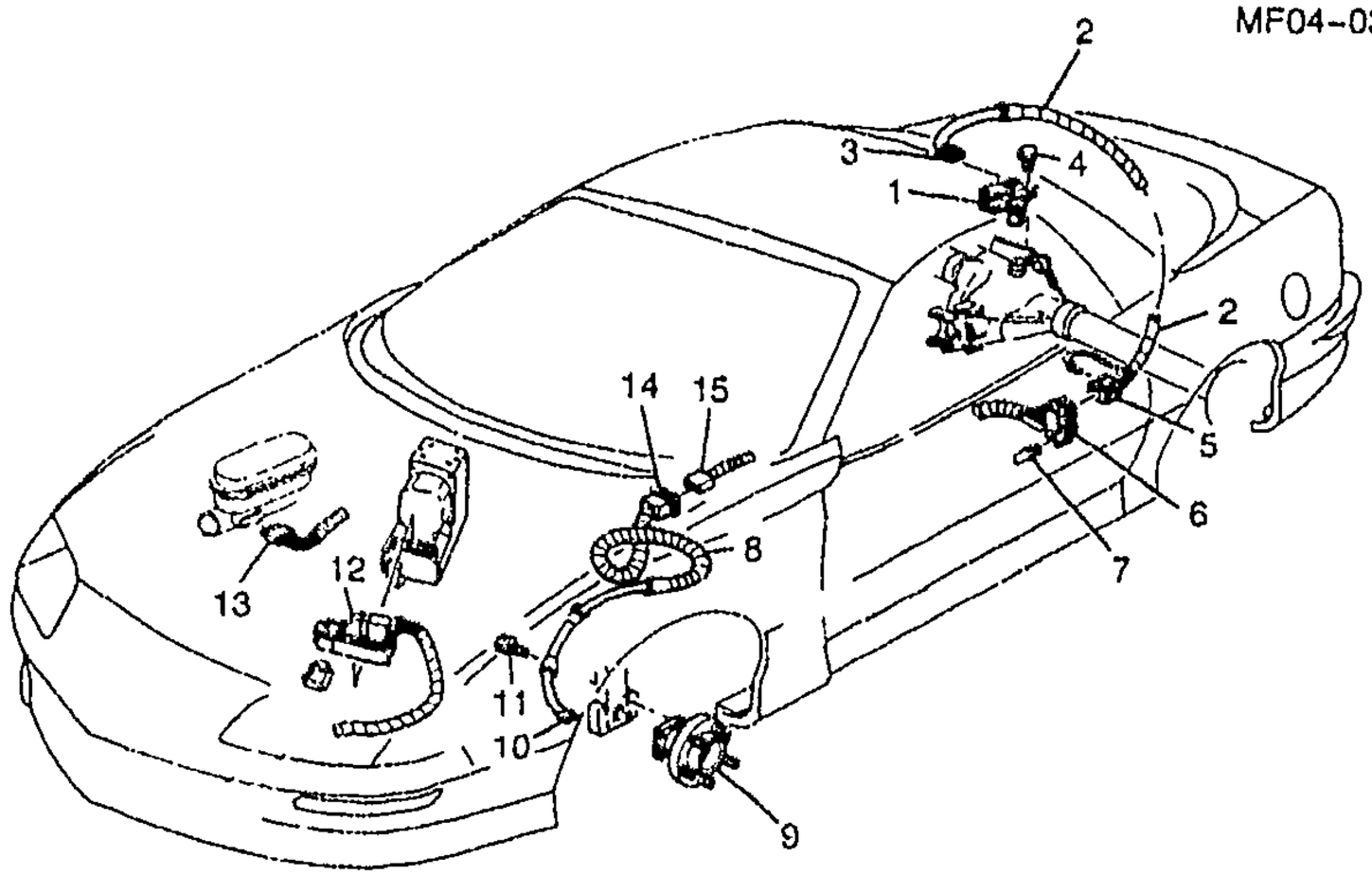

MF04-035

1998-2002 F BRAKE ELECTRICAL SYSTEM/ANTI-LOCK(EXC NW9)

1.	7-A13	4.710	SENSOR, WHL SPD (RR) (AC-DELCO #10456115)	98-02	F (LS1) (EXC NW9)	1	10456115
	7-A13	4.710	SENSOR, WHL SPD (RR) (AC-DELCO #10456115)	98-02	F (L36)	1	10456115
2.	7-A15	4.720	HARNESS, RR WHL SPD SEN WRG (INCLS 3, 5)	98-02	F (LS1) (EXC NW9)	1	12177547
	7-A15	4.720	HARNESS, RR WHL SPD SEN WRG (INCLS 3, 5)	98-02	F (L36)	1	12177547
3.	7-A13	4.710	CONNECTOR, SEN--WHL SPD (PART OF 2) (LT GREY) (2-WAY F150) (FSU-12116958 FOR NON-WHL SPD SENSOR APPLICATIONS ONLY) (2.535) ...	98-02	F		12052644
4.		8.900	BOLT, HEX W/CON WA M6X1X15 9.8 PZOR 12.5-OD FULL THD (WHL SPD SEN) (AC-DELCO #8639743)	98-02	.....	1	8639743
5.	7-N5	2.530	CONNECTOR, INLINE-TO I/P HARN (PART OF 2) (4-WAY F) (M/P 150) (W/LEADS) (13.100) (AC-DELCO #PT1025)	98-02	F	1	15305883
6.		N.S.	CONNECTOR, INLINE-TO I/P HARN		....		
7.		8.967	RIVET (FUEL SDR WRG HARN CONN)	98-02	.....	2	2477054
8.	7-A15	4.720	HARNESS, FRT WHL SPD SEN WRG (INCLS 11, 14) (845 MM LONG)	98	F	2	12177333
	7-A15	4.720	HARNESS, FRT WHL SPD SEN WRG (INCLS 11, 14) (700 MM LONG)	00-02	F	2	12177650

cardiagn.com

	7-A15	4.720	**HARNESS**, FRT WHL SPD SEN WRG (FOR 1ST DES SEE 12177333) (INCLS 11, 14) (700 MM LONG)	99	F (2ND DES)	2	12177650
	7-A15	4.720	**HARNESS**, FRT WHL SPD SEN WRG (FOR 2ND DES SEE 12177650) (INCLS 11, 14) (845 MM LONG)	99	F (1ST DES)	2	12177333
9.	7-D11	6.307	**HUB**, FRT WHL (W/ SPEED SENSOR RING) (LESS ROTOR) (W/SPEED SENSOR) (AC-DELCO #20-86)	98-02	F	2	7470587
10.	7-A13	4.710	**CONNECTOR**, SEN-WHL SPD (PART OF 8) (LT GREY) (2-WAY F150) (FSU-12116958 FOR NON-WHL SPD SENSOR APPLICATIONS ONLY) (2.535) ...	98-02	F		12052644
11.	7-C22	5.812	**BOLT**, FRT WHL HUB (M10X1.5X50 10.9 POR) (8.900) ..	98-02	F	8	11508355
12.	7-A15	4.720	**CONNECTOR KIT**, ELEK BRK CONT MDL WRG HARN (INCLS CONN, SEAL TPA, CAVITY PLUGS, CVR, CPA, PLR, TERMS)	98-02	F	1	12167314
13.	7-A7	4.651	**CONNECTOR**, SW-BRK FLUID LVL IND (BLACK) (2-WAY F W/LEADS) (2.383) (AC-DELCO #PT169)	98-02	F	1	12101899
14.		N.S.	**CONNECTOR**, INLINE-TO FWD LP HARN (PART OF 8)		.....		
15.	7-A15	4.720	**CONNECTOR**, INLINE-TO WHL SPD SEN (2-WAY M W/O LEADS)	98-02	F	1	12162343

RPO DEFINITIONS

LS1 – ENGINE GAS, 8 CYL, 5.7L, SFI, ALUMINUM ENGINE
L36 – ENGINE GAS, 6 CYL. 3.8K, MFI, V6, HO (ERV6 SERIES)
NW9 – TRACTION CONTROL ELECTRONIC

cardiagn.com

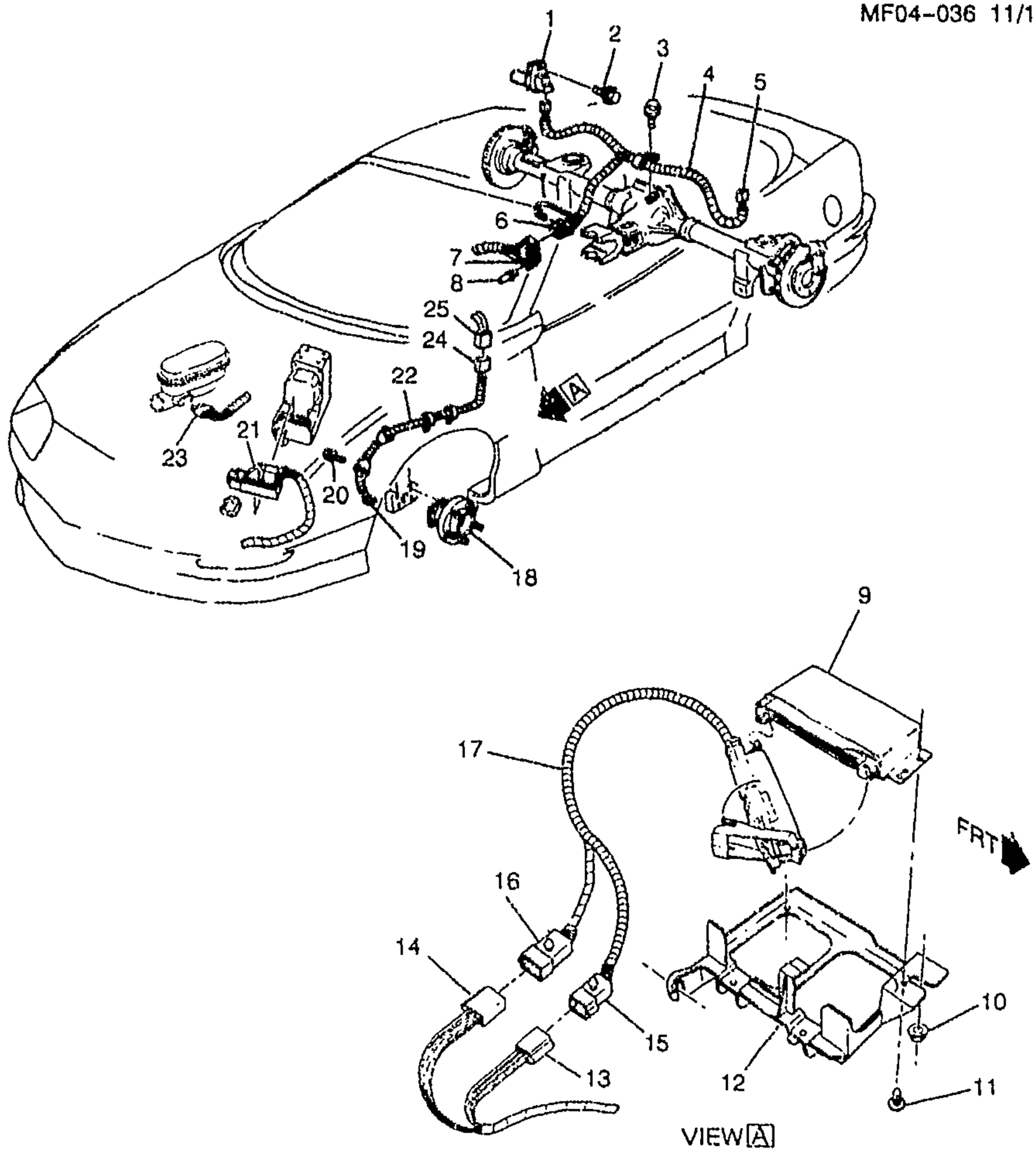

MF04-036

1998-2002 F BRAKE ELECTRICAL SYSTEM/ANTI-LOCK(NW9)

1.	7-A13	4.710	SENSOR, RR WHL SPD	98-02	F (LS1, GU2, GU5, GU6, NW9)	2	10456535
2.		8.900	BOLT, HEX W/CON WA M6X1X15 9.8 PZOR 12.5-OD FULL THD (WHL SPD SEN) (AC-DELCO #8639743)	98-02	F	2	8639743
3.		8.977	BOLT, M6X1X13, 10 THD, 12.5 OD (WHL SPD SEN WRG HARN CLIP)	98-02	F	1	11509699

cardiagn.com

4.	7-A15	4.720	**HARNESS**, WHL SPD SEN WRG (INCLS 5, 6)	98-02	F (LS1, NW9)	1	12177546
5.	7-A13	4.710	**CONNECTOR**, SEN-WHL SPD (RR) (PART OF 4) (LT GREY) (2-WAY F150) (FSU-12116958 FOR NON-WHL SPD SENSOR APPLICATIONS ONLY) (2.535)	98-02	F (LS1, NW9)	1	12052644
	7-A13	4.710	**CONNECTOR**, SEN-WHL SPD (RR) (PART OF 4) (BLACK) (2-WAY F) (W/LEADS) (RR)	98-00	F	1	12167117
	7-A13	4.710	**CONNECTOR**, SEN-WHL SPD (RR) (PART OF 4) (LT GREY) (2-WAY F150) (FSU-12116958 FOR NON-WHL SPD SENSOR APPLICATIONS ONLY) (2.535)	98-02	F	1	12052644
6.	7-N5	2.530	**CONNECTOR**, INLINE-TO I/P HARN (PART OF 4) (4-WAY F) (M/P 150) (W/LEADS) (13.100) (AC-DELCO #PT1025)	98-02	F	1	15305883
7.		N.S.	**CONNECTOR**, INLINE-TO F/TNK HARN (PART OF I/P WRG HARN)				
8.		8.967	**RIVET** (FUEL SDR WRG HARN CONN)	98-02		2	2477054
9.	7-N16	3.440	**MODULE**, ACCEL CONT & CRCONT SERVO CBL ADJR	98	F (NW9)	1	10282710
	7-N16	3.440	**MODULE**, ACCEL CONT & CRCONT SERVO CBL ADJR	99	F (LS1, NW9)	1	10282710
	7-N16	3.440	**MODULE**, ACCEL CONT & CRCONT SERVO CBL ADJR	00-02	F (LS1, NW9)	1	10426909
10.		8.915	**NUT**, HEX W/CON WA M8X1.25X9.5 19-OD 9 ZP (ACCEL CONT & CRCONT SERVO CBL ADJR MDL BRKT) (8.917)	98-02	F	1	11506117
11.		8.950	**RETAINER**, FITS .250 HOLE, 1.01LG.700-OD NYLON BLACK (ACCEL CONT & CRCONT SERVO CBL ADJR MDL BRKT)	98-02	F	3	10121502
12.	7-N16	3.440	**BRACKET**, ACCEL CONT & CRCONT SERVO CBL ADJR MDL (4.720)	98	F (NW9)	1	10282711
	7-N16	3.440	**BRACKET**, ACCEL CONT & CRCONT SERVO CBL ADJR MDL (4.720)	99-02	F (LS1, NW9)	1	10282711
13.		N.S.	**CONNECTOR**, MDL-CRCONT				
14.		N.S.	**CONNECTOR**, MDL-CRCONT				
15.		N.S.	**CONNECTOR**, INLINE-TO FWD LP HARN (PART OF 17)				
16.	7-N5	2.530	**CONNECTOR**, INLINE-TO FWD LP HARN (PART OF 17) (10-WAY M W/LEADS) (2.535) (AC-DELCO #PT215)	98-02	F	1	12101823
17.	7-N17	3.887	**HARNESS**, ACCEL CONT & CRCONT SERVO CBL ADJR MDL WRG (INCLS 15, 16)	98	F (NW9)	1	12177332

cardiagn.com

	7-N17	3.887	**HARNESS**, ACCEL CONT & CRCONT SERVO CBL ADJR MDL WRG (INCLS 15, 16)	99-02	F (LS1, NW9)	1	12177332
18.	7-D11	6.307	**HUB**, FRT WHL (LESS ROTOR) (W/SPEED SENSOR) (AC-DELCO #20-86)	98-02	F	2	7470587
19.	7-A13	4.710	**CONNECTOR**, SEN-WHL SPD (FRT) (PART OF 25) (LT GREY) (2-WAY F150) (FSU-12116958 FOR NON-WHL SPD SENSOR APPLICATIONS ONLY) (2.535) ...	98-02	F (LS1, NW9)	1	12052644
	7-A13	4.710	**CONNECTOR**, SEN-WHL SPD (FRT) (PART OF 25) (BLACK) (2-WAY F) (W/LEADS) (RR)	98-00	F	1	12167117
20.	7-C22	5.812	**BOLT**, FRT WHL HUB (M10X1.5X50 10.9 POR) (6.900) ..	98-02	F	8	11508355
21.	7-A15	4.720	**CONNECTOR KIT**, ELEK BRK CONT MDL WRG HARN (INCLS CONN, SEAL TPA, CAVITY PLUGS, CVR, CPA, PLR, TERMS)	98-02	F	1	12167314
22.	7-A15	4.720	**HARNESS**, FRT WHL SPD SEN WRG (INCLS 14, 26) (845 MM LONG)	98	F	2	12177333
	7-A15	4.720	**HARNESS**, FRT WHL SPD SEN WRG (INCLS 14, 26) (700 MM LONG)	00-02	F	2	12177650
	7-A15	4.720	**HARNESS**, FRT WHL SPD SEN WRG (FOR 1ST DES SEE 12177333) (INCLS 14, 26) (700 MM LONG)	99	F (2ND DES)	2	12177650
	7-A15	4.720	**HARNESS**, FRT WHL SPD SEN WRG (FOR 2ND DES SEE 12177650) (INCLS 14, 26) (845 MM LONG)	99	F (1ST DES)	2	12177333
23.	7-A7	4.651	**CONNECTOR**, SW-BRK FLUID LVL IND (BLACK) (2-WAY F W/LEADS) (2.383) (AC-DELCO #PT169)	98-02	F	1	12101899
24.		N.S.	**CONNECTOR**, INLINE-TO FWD LP HARN (PART OF 25)	98-02	.....		
25.	7-A15	4.720	**CONNECTOR**, INLINE-TO WHL SPD SEN (INCLS 19) (2-WAY M W/O LEADS)	98-02	F	1	12162343

RPO DEFINITIONS
GU2 – AXLE,REAR,2.73 RATIO
GU5 – AXLE,REAR,3.23 RATIO
GU6 – AXLE,REAR,3.42 RATIO
LS1 – ENGINE GAS, 8 CYL, 5.7L, SFI, ALUMINUM ENGINE
NW9 – TRACTION CONTROL ELECTRONIC

cardiagn.com

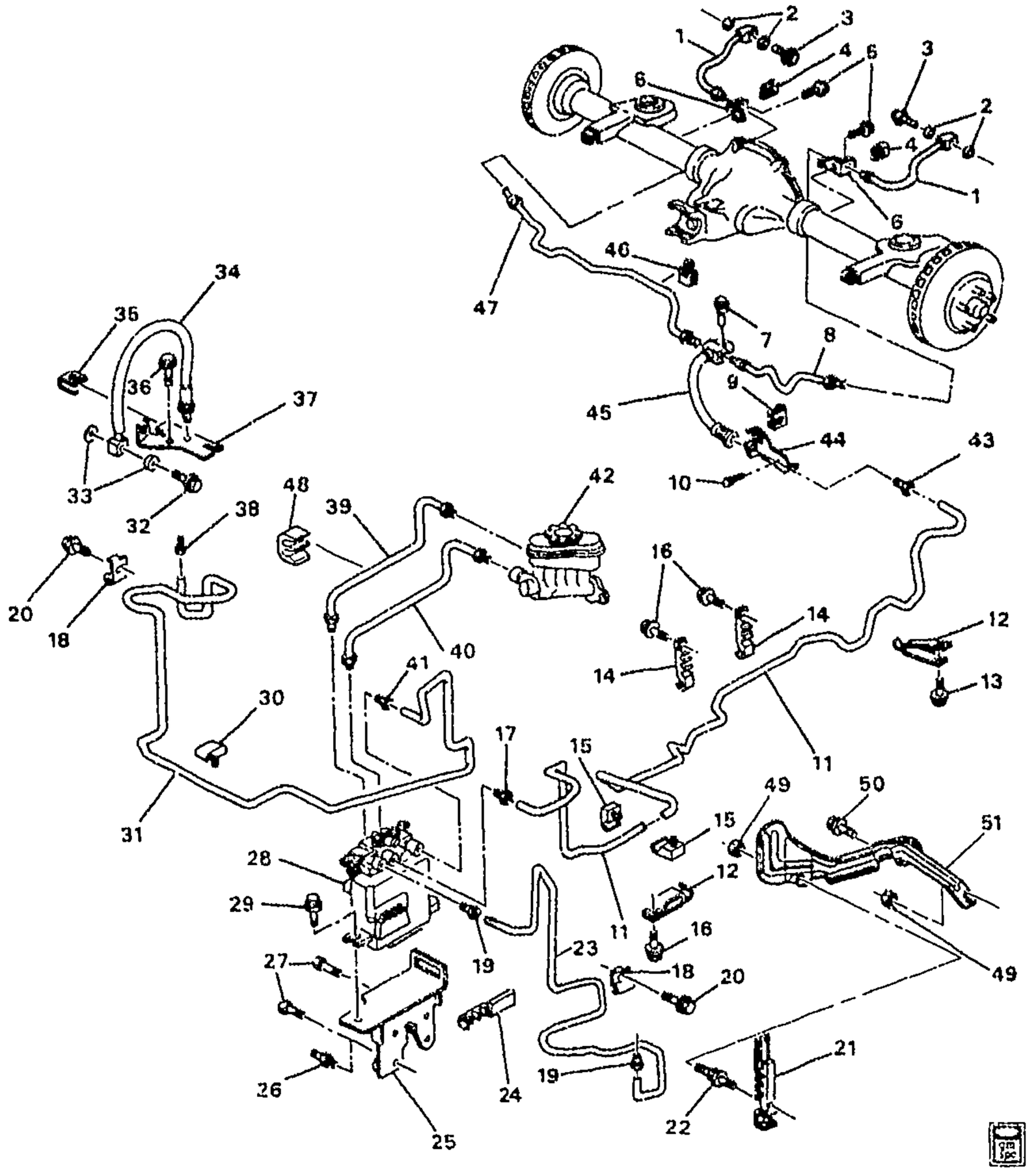

MF04-023

1993-1994 F BRAKE HOSES & PIPES (J65)
1995-1997 F BRAKE HOSES & PIPES (J65,EXC NW9)

1.	7-A11	4.680	HOSE, RR BRK (INCLS 2, 3, 4, 6)	93-97	F	RH	18017654
	7-A11	4.680	HOSE, RR BRK (INCLS 2, 3, 4, 6)	93-97	F	LH	18017655
2.	7-A11	4.681	GASKET, RR BRK HOSE FTG (PART OF 1) (10.3X14.5X1.61) (COPPER) (AC-DELCO #21012386)	93-97	F	4	21012386
3.	7-A11	4.671	FITTING, RR BRK HOSE (PART OF 1) (M10 X 1.0-6G THD 8) (4.686)	93-97	F	2	10286122

cardiagn.com

4.	7-A11	4.681	**RETAINER**, RR BRK HOSE (PART OF 1) (5MM)	93-97	F	2	22555667
5.		8.977	**SCREW**, HEX W/FLAT WA (RR BRK HOSE)	93-97		2	12337828
6.		N.S.	**BRACKET**, RR BRK HOSE (PART OF 1)				
7.	7-A11	4.681	**BOLT**, RR BRK HOSE FTG (5/16X18.00X1 3/16) (W/SHOULDER)	93-94	F	1	15630743
	7-A11	4.681	**BOLT**, RR BRK HOSE FTG (5/16X18.00X1 3/16) (W/SHOULDER)	95-97	F (EXC NW9)	1	15630743
8.		N.S.	**PIPE**, RR BRK (COMPONENT PARTS SERVICED)			LH	
		8.965	**TUBING**, BULK (STEEL) 3/16X20 FT ROLL (BRK & FUEL FEED & FUEL RTN & EVAP EMIS) (8.964)	93-97	F	AR	12547207
		8.964	**ARMOR SHIELD**, BRK PIPE (CUT TO LENGTH) (BRK PIPE)	93-97	F	AR	12360513
	7-A12	4.686	**FITTING**, RR BRK PIPE (3/8-24X9/16, 5/16 THD)	93-97	F	1	25554171
		8.963	**NUT**, MALE MUSHROOM FLARED TUBE M10X1 THRD ZD (RR BRK RR PIPE)	93-97	F	1	11504479
9.	7-A11	4.681	**RETAINER**, RR BRK HOSE (PART OF 45) (13MM)	93-97	F	1	10064807
10.		8.977	**SCREW**, HEX M8X2.12X30 W/FL WA POR (RR BRK HOSE BRKT)	93-97		1	11504765
11.		8.964	**TUBING**, BRK (1/4" X 16 FT ROLL (FRT BRK RR)	93	F	AR	12548430
		8.964	**PIPE**, 6.0M X 0.7M, 25' ROLL, CTL (FRT BRK RR)	94-97	F	AR	12300088
12.	7-N15	3.162	**CLIP**, FUEL FEED & EVAP EMIS & RTN INTER PIPE	93-94	F	1	10236965
	7-N15	3.162	**CLIP**, FUEL FEED & EVAP EMIS & RTN INTER PIPE	95-97	F (EXC NW9)	1	10288279
	7-N14	3.145	**CLIP**, FUEL FEED & EVAP EMIS & RTN INTER PIPE (3.162)	97	F (EXC NW9)	1	10288279
	7-N15	3.162	**CLIP**, FUEL FEED & RTN RR PIPE	93-94	F	1	10236965
	7-N15	3.162	**CLIP**, FUEL FEED & RTN RR PIPE	95-97	F (EXC NW9)	1	10288279
13.		8.977	**SCREW**, HEX W/FLAT WA (FUEL FEED RR PIPE CLIP)	93-97		1	12337828
14.		N.S.	**CLIP**, FUEL FEED & EVAP EMIS & RTN INTER PIPE				
15.	7-A12	4.686	**CLIP**, BRK PIPE	93-97	F	2	18017677
16.		8.977	**SCREW**, HEX W/FLAT WA (FUEL FEED FRT PIPE CLIP)	93-97		3	12337828
17.	7-A12	4.686	**NUT**, RR BRK COM3 VLV PIPE	93-94	F	1	10198382
	7-A12	4.686	**NUT**, RR BRK FRT PIPE	95-97	F (EXC NW9)	1	10198382
18.	7-A12	4.686	**CLIP**, FRT BRK PIPE (BLACK) (WRAP AROUND DES)	93-97	F	2	10254581
19.		8.963	**NUT**, FLRD TUBE, M10X1X17.3, 4.75 TUBE, 7113M (FRT BRK PIPE)	93-97		2	11516402
20.		8.977	**SCREW**, HEX W/FLAT WA (FRT BRK FRT PIPE CLIP)	93-97		2	12337828
21.	7-A12	4.686	**CLIP**, BRK PIPE	93-97	F	1	18018632

cardiagn.com

22.		8.977	**BOLT-HEX W/FLAT WA,** M6.3X1.8X30, 17 OD, 6010M, PO, TAP-AB PT (BRK PIPE CLIP)	93	.....	1	11505332
	7-A12	4.686	**STUD,** BRK PIPE CLIP (BRK PIPE CLIP) (3.452)	94-97	F	2	25522171
23.		8.965	**TUBING,** BULK (STEEL) 3/16X20 FT ROLL (FRT BRK) (8.964)	93-97	.....	AR	12547207
24.	7-A12	4.686	**CLIP,** BRK PIPE	93-97	F	1	18016440
25.	7-A17	4.730	**BRACKET,** BRK PRESS MOD VLV	93-94	F	1	10257051
	7-A17	4.730	**BRACKET,** BRK PRESS MOD VLV	95-97	F (EXC NW9)	1	10257051
26.	7-N17	3.655	**STUD,** SECD AIR INJN PUMP BRKT (M10X1.5X30/M6X1X26) ...	93	F (LT1)	2	10186163
	7-N17	3.655	**STUD,** SECD AIR INJN PUMP BRKT (M10X1.5X30/M6X1X26) ...	93-95	F (L32, M49)	2	10186163
	7-D20	6.635	**STUD,** P/S FLUID RSVR BRKT (M10X1.5X30/M6X1X26) (3.655) ..	95-97	F (L36)	2	10186163
	7-D20	6.635	**STUD,** P/S FLUID RSVR BRKT (M10X1.5/30/M6X1X13) (8.981) ..	96-97	F (L36)	1	11516976
27.	7-A17	4.730	**BOLT,** BRK PRESS MOD VLV BRKT (M10X1.5X25) (3.740)	93-97	F (LT1)	4	11515510
	7-A17	4.730	**BOLT,** BRK PRESS MOD VLV BRKT (M10X1.5X25) (3.740)	93-95	F (L32)	2	11515510
	7-A17	4.730	**BOLT,** BRK PRESS MOD VLV BRKT (M10X1.5X25) (3.740)	95-97	F (L36)	2	11515510
28.		N.S.	**VALVE,** BRK PRESS MOD (SEE "BRAKE PRESSURE MODULATOR VALVE" ILLUSTRATION IN GRP. 4.000 FOR DETAILED VIEW.)		.....		
29.		8.900	**BOLT-HEX,** M8X1.25X30, 22 THD, 24MM OD, 9.8, 7114M (BRK PRESS MOD VLV)	93-97	.....	1	11516594
30.	7-A12	4.686	**CLIP,** FRT BRK PIPE (BLACK) (TUBE CLIP DES)	93-97	F	1	10254580
31.		8.965	**TUBING,** BULK (STEEL) 3/16X20 FT ROLL (FRT BRK) (8.964)	93-97	.....	AR	12547207
32.	7-A12	4.686	**FITTING,** FRT BRK HOSE (PART OF 34) (USED ON 1993-94 ONLY)) (M10 X 1.5) (TO CALIPER) (4.671)	93-94	F	2	14000404
33.	7-A12	4.686	**GASKET,** FRT BRK HOSE FTG (PART OF 34) (USED ON 1993-94 ONLY)) (10.3X14.5X1.61) (COPPER) (4.681) (AC-DELCO #21012386)	93-94	F	4	21012386
34.	7-A11	4.680	**HOSE,** FRT BRK (INCLS 32, 33, 35, 37)	93-97	F	LH	17999665
	7-A11	4.680	**HOSE,** FRT BRK (INCLS 32, 33, 35, 37)	93-97	F	RH	17999666
35.	7-A11	4.681	**RETAINER,** FRT BRK HOSE (PART OF 34) (USED ON 1993-94 ONLY)) (5MM)	93-94	F	2	22555667
36.		8.900	**BOLT,** HFH M8X1.25X18 (FRT BRK HOSE CLIP)	93-97	.....	2	11513703
37.		N.S.	**BRACKET,** FRT BRK HOSE (PART OF 34)		.....		

cardiagn.com

38.		8.963	**NUT**, FLRD TUBE, M10X1X17.3, 4.75 TUBE, 7113M (FRT BRK PIPE)	93–97		1	11516402
39.		N.S.	**PIPE**, FRT BRK COMB VLV (COMPONENT PARTS SERVICED)				
		8.965	**TUBING**, BULK (STEEL) 3/16X20 FT ROLL (BRK & FUEL FEED & FUEL RTN & EVAP EMIS) (8.964)	93–97	F	AR	12547207
		8.963	**NUT**, FLRD TUBE, M11X1.5X17.8, 4.75 TUBE, ZC 7113M (BRK PRESS MOD VLV RR BRK PIPE)	93–97	F	1	11516740
		8.963	**NUT**, FLRD TUBE, M10X1X17.3, 4.75 TUBE, 7113M (RR BRK RR PIPE)	93–97	F	1	11516402
40.		N.S.	**PIPE**, RR BRK COMB VLV (COMPONENT PARTS SERVICED)				
		8.965	**TUBING**, BULK (STEEL) 3/16X20 FT ROLL (BRK & FUEL FEED & FUEL RTN & EVAP EMIS) (8.964)	93–97	F	AR	12547207
		8.963	**NUT**, FLRD TUBE, M11X1.5X17.8, 4.75 TUBE, ZC 7113M (BRK PRESS MOD VLV RR BRK PIPE)	93–97	F	1	11516740
		8.963	**NUT**, FLRD TUBE, M10X1X17.3, 4.75 TUBE, 7113M (RR BRK RR PIPE)	93–97	F	1	11516402
41.		8.963	**NUT–FLARED TUBE**, MALE, MUSHROOM, M11X1.5X17.6, LCS, ZC, 4.75 TUBE OD, 35 DEG (FRT BRK PIPE)	93–97		1	11515872
42.	7–A7	4.650	**CYLINDER**, BRK MAS (SEE "BRAKE MASTER CYLINDER" ILLUSTRATION IN GRP. 4.000 FOR DETAILED VIEW.) (AC–DELCO #174–714)	93–97	F	1	18021940
	7–A7	4.650	**CYLINDER**, BRK MAS (1" CYLINDER BORE) (SEE "BRAKE MASTER CYLINDER" ILLUSTRATION IN GRP. 4.000 FOR DETAILED VIEW.) (AC–DELCO #18M700)	93–97	FP (WITH POWER BRAKES)	AR	18030942
43.		8.924	**NUT–METRIC MALE MUSHROOM FLARED TUBE** (RR BRK FRT PIPE)	93–97		1	11516405
44.		N.S.	**BRACKET**, RR BRK HOSE (PART OF 45)				
45.	7–A11	4.680	**HOSE**, RR BRK (INCLS 9, 44)	93–97	F	1	22163405
46.	7–A12	4.686	**CLIP**, RR BRK PIPE	93–97	F	1	1261802
47.	7–A11	4.685	**PIPE**, RR BRK	93	F (J65)	RH	18021492
		N.S.	**PIPE**, RR BRK (COMPONENT PARTS SERVICED)	94–97		RH	
		8.965	**TUBING**, BULK (STEEL) 3/16X20 FT ROLL (BRK & FUEL FEED & FUEL RTN & EVAP EMIS) (8.964)	93–97	F	AR	12547207
		8.964	**ARMOR SHIELD**, BRK PIPE (CUT TO LENGTH) (BRK PIPE)	93–97	F	AR	12360513

cardiagn.com

	7-A12	4.686	**FITTING**, RR BRK PIPE (3/8-24X9/16, 5/16 THD)	94-97	F	1	25554171
		8.963	**NUT**, MALE MUSHROOM FLARED TUBE M10X1 THRD ZD (RR BRK RR PIPE)	93-97	F	1	11504479
48.	7-A12	4.686	**CLIP**, BRK COMB VLV PIPE (2 SLOT) (21.5X10.0MM)	93-97	F	2	25607191
49.		8.917	**NUT**, HEX W/CON WA 6X1X5.5 16-OD ZP 9 (NOT REQUIRED FOR CARS WITH L32 ENGINE)	93-97	F	2	11517293
50.		8.977	**SCREW**, 6.3X1.81X20 (NOT USED ON VEHICLES WITH L32 ENGINE)	93-97	F	1	11509051
51.		N.S.	**SHIELD**, BRK PIPE (NOT USED ON 1993 VEHICLES OR WITH L32 ENGINE)	93			
	7-A11	4.685	**SHIELD**, BRK PIPE (NOT USED ON 1993 VEHICLES OR VEHICLES WITH L32 ENGINE)	94-97	F (LT1)	1	10274660
	7-A11	4.685	**SHIELD**, BRK PIPE (NOT USED ON 1993 VEHICLES OR VEHICLES WITH L32 ENGINE) (8.964)	94	F	1	12360676
	7-A11	4.685	**SHIELD**, BRK PIPE (NOT USED ON 1993 VEHICLES OR VEHICLES WITH L32 ENGINE)	95-97	F (L36)	1	10274660
	7-A11	4.685	**SHIELD**, BRK PIPE (NOT USED ON 1993 VEHICLES OR VEHICLES WITH L32 ENGINE) (8.964)	95-97	F (EXC NW9)	1	12360676
	7-A11	4.685	**SHIELD**, BRK PIPE	96	F (LT1)	1	10274660
	7-A11	4.685	**SHIELD**, BRK PIPE	96	F (L36)	1	10274660
	7-A11	4.685	**SHIELD**, BRK PIPE (8.964)	96	F (EXC NW9)	1	12360676

RPO DEFINITIONS

J65 – BRAKE SYSTEM,POWER,FRONT AND REAR DISC
LT1 – ENGINE-GAS, 8 CYL, 5.7L(5.7P),MFI,HO
L32 – ENGINE,3.4L,V6,(3.4S),SFI,OHV
L36 – ENGINE GAS, 6 CYL, 3.8K, MFI, V6, HO (ERV6 SERIES)
M49 – TRANSMISSION MAN 5 SPD, BORG WARNER, 77MM, 3.75 1ST, .76 5TH, O/D
NW9 – TRACTION CONTROL ELECTRONIC

cardiagn.com

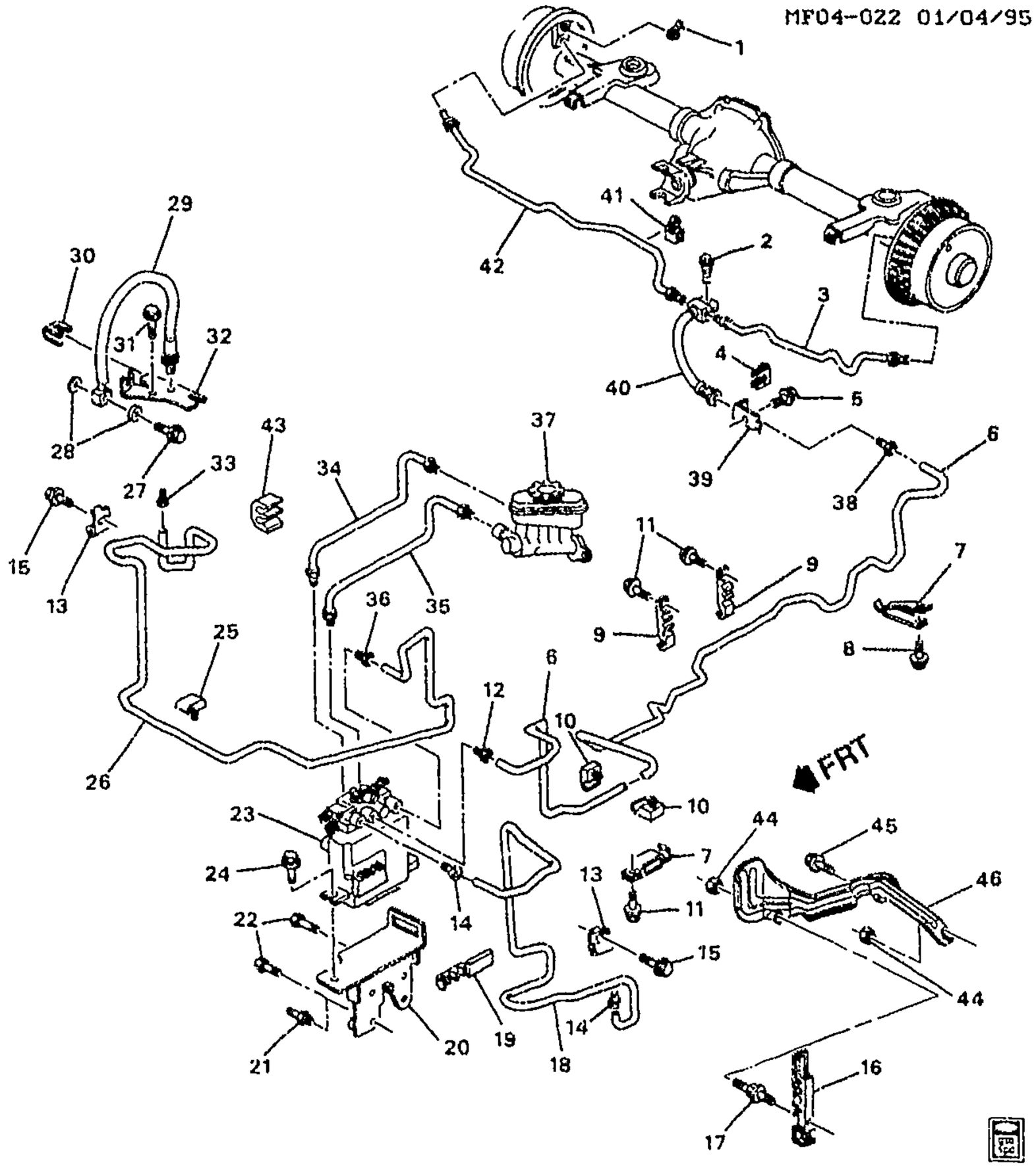

MF04-022

1993-1997 F BRAKE HOSES & PIPES (J41)

1.	7-A10	4.666	COVER, RR BRK BLEDR BOLT (BLACK) (3/8-24 THD) (RUBBER) (FOR REPAIR USE ONLY)	93-97	F	2	18003901
2.	7-A11	4.681	BOLT, RR BRK HOSE FTG (5/16X18.00X1 3/16) (W/SHOULDER)	93-94	F	1	15630743
	7-A11	4.681	BOLT, RR BRK HOSE FTG (5/16X18.00X1 3/16) (W/SHOULDER)	95-97	F (EXC NW9)	1	15630743
3.		N.S.	PIPE, RR BRK (SERV BY CPS) ...		.....	LH	

cardiagn.com

		8.965	**TUBING**, BULK (STEEL) 3/16X20 FT ROLL (BRK & FUEL FEED & FUEL RTN & EVAP EMIS) (8.964)	93-97	F	AR	12547207
		8.964	**ARMOR SHIELD**, BRK PIPE (CUT TO LENGTH) (BRK PIPE)	93-97	F	AR	12360513
		8.963	**NUT**, 3/8 INVERTED FLARED TUBE (RR BRK PIPE) (4.686)	93-97		AR	25554171
4.	7-A11	4.681	**RETAINER**, RR BRK HOSE (PART OF 40) (13MM)	93-97	F	1	10064807
5.		8.977	**SCREW**, HEX M8X2.12X30 W/FL WA POR (RR BRK HOSE BRKT)	93-97		1	11504765
6.		8.964	**TUBING**, BRK (1/4" X 16 FT ROLL (FRT BRK RR)	93		AR	12548430
		8.964	**PIPE**, 6.0M X 0.7M, 25' ROLL, CTL (FRT BRK RR)	94-97		AR	12300088
7.	7-N15	3.162	**CLIP**, FUEL FEED & EVAP EMIS & RTN INTER PIPE	93-94	F	1	10236965
	7-N15	3.162	**CLIP**, FUEL FEED & EVAP EMIS & RTN INTER PIPE	95-97	F (EXC NW9)	1	10288279
	7-N14	3.145	**CLIP**, FUEL FEED & EVAP EMIS & RTN INTER PIPE (3.162)	97	F (EXC NW9)	1	10288279
	7-N15	3.162	**CLIP**, FUEL FEED & RTN RR PIPE	93-94	F	1	10236965
	7-N15	3.162	**CLIP**, FUEL FEED & RTN RR PIPE	95-97	F (EXC NW9)	1	10288279
8.		8.977	**SCREW**, HEX W/FLAT WA (FUEL FEED RR PIPE CLIP)	93-97		1	12337828
9.		N.S.	**CLIP**, FUEL FEED & EVAP EMIS & RTN INTER PIPE				
10.	7-A12	4.686	**CLIP**, BRK PIPE	93-97	F	2	18017677
11.		8.977	**SCREW**, HEX W/FLAT WA (FUEL FEED FRT PIPE CLIP)	93-97		3	12337828
12.		8.924	**NUT-METRIC MALE MUSHROOM FLARED TUBE** (RR BRK COMB VLV PIPE)	93-97		AR	11516405
13.	7-A12	4.686	**CLIP**, FRT BRK PIPE (BLACK) (WRAP AROUND DES)	93-97	F	2	10254581
14.		8.963	**NUT**, FLRD TUBE, M10X1X17.3, 4.75 TUBE, 7113M (FRT BRK PIPE)	93-97		2	11516402
15.		8.977	**SCREW**, HEX W/FLAT WA (FRT BRK FRT PIPE CLIP)	93-97		2	12337828
16.	7-A12	4.686	**CLIP**, BRK PIPE	93-97	F	1	18016632
17.		8.977	**BOLT-HEX W/FLAT WA**, M6.3X1.8X30, 17 OD, 6010M, PO, TAP-AB PT (BRK PIPE CLIP)	93		1	11505332
	7-A12	4.686	**STUD**, BRK PIPE CLIP (BRK PIPE CLIP) (3.452)	94-97	F	2	25522171
18.		8.965	**TUBING**, BULK (STEEL) 3/16X20 FT ROLL (FRT BRK) (8.964)	93-97		AR	12547207
19.	7-A12	4.686	**CLIP**, BRK PIPE	93-97	F	1	18016440
20.	7-A17	4.730	**BRACKET**, BRK PRESS MOD VLV	93-94	F	1	10257051
	7-A17	4.730	**BRACKET**, BRK PRESS MOD VLV	95-97	F (EXC NW9)	1	10257051
21.	7-N17	3.655	**STUD**, SECD AIR INJN PUMP BRKT (M10X1.5X30/M6X1X26)	93-95	F (L32, M49)	2	10186163
	7-D20	6.635	**STUD**, P/S FLUID RSVR BRKT (M10X1.5X30/M6X1X26) (3.655)	95-97	F (L36)	2	10186163

cardiagn.com

	7-D20	6.635	STUD, P/S FLUID RSVR BRKT (M10X1.5/30/M6X1X13) (8.981) ..	96-97	F (L36)	1	11516976
22.	7-A17	4.730	BOLT, BRK PRESS MOD VLV BRKT (M10X1.5X25) (3.740)	93-95	F (L32)	2	11515510
	7-A17	4.730	BOLT, BRK PRESS MOD VLV BRKT (M10X1.5X25) (3.740)	95-97	F (L36)	2	11515510
23.		N.S.	VALVE, BRK PRESS MOD (SEE "BRAKE PRESSURE MODULATOR VALVE" ILLUSTRATION IN GRP. 4.000 FOR DETAILED VIEW.)		.....		
24.		8.900	BOLT-HEX, M8X1.25X30, 22 THD, 24MM OD, 9.8, 7114M (BRK PRESS MOD VLV)	93-97	....	1	11516594
25.	7-A12	4.686	CLIP, FRT BRK PIPE (BLACK) (TUBE CLIP DES)	93-97	F	1	10254580
26.		8.965	TUBING, BULK (STEEL) 3/16X20 FT ROLL (FRT BRK) (8.964)	93-97	.....	AR	12547207
27.	7-A12	4.686	FITTING, FRT BRK HOSE (PART OF 29) (USED IN 1993-94 ONLY)) (M10 X 1.5) (TO CALIPER) (4.671)	93-94	F	2	14000404
28.	7-A12	4.686	GASKET, FRT BRK HOSE FTG (PART OF 29) (USED IN 1993-94 ONLY)) (10.3X14.5X1.61) (COPPER) (4.681) (AC-DELCO #21012386)	93-94	F	4	21012386
29.	7-A11	4.680	HOSE, FRT BRK (INCLS 27, 28, 30, 32)	93-97	F	LH	17999665
	7-A11	4.680	HOSE, FRT BRK (INCLS 27, 28, 30, 32)	93-97	F	RH	17999666
30.	7-A11	4.681	RETAINER, FRT BRK HOSE (PART OF 29) (USED IN 1993-94 ONLY)) (5MM)	93-94	F	2	22555667
31.		8.900	BOLT, HFH M8X1.25X18 (FRT BRK HOSE CLIP)	93-97	.....	2	11513703
32.		N.S.	BRACKET, FRT BRK HOSE (PART OF 29)		.....		
33.		8.963	NUT , FLRD TUBE, M10X1X17.3, 4.75 TUBE, 7113M (FRT BRK PIPE)	93-97	....	1	11516402
34.		N.S.	PIPE, FRT BRK COMB VLV (SERV BY CPS)		.....		
		8.965	TUBING, BULK (STEEL) 3/16X20 FT ROLL (BRK & FUEL FEED & FUEL RTN & EVAP EMIS) (8.964)	93-97	F	AR	12547207
		8.963	NUT, FLRD TUBE, M11X1.5X17.8, 4.75 TUBE, ZC 7113M (BRK PRESS MOD VLV RR BRK PIPE) .	93-97	F	1	11516740
		8.963	NUT , FLRD TUBE, M10X1X17.3, 4.75 TUBE, 7113M (RR BRK RR PIPE)	93-97	F	1	11516402
35.		N.S.	PIPE, RR BRK COMB VLV (SERV BY CPS)		.....		
		8.965	TUBING, BULK (STEEL) 3/16X20 FT ROLL (BRK & FUEL FEED & FUEL RTN & EVAP EMIS) (8.964)	93-97	F	AR	12547207

cardiagn.com

		8.963	NUT, FLRD TUBE, M11X1.5X17.8, 4.75 TUBE, ZC 7113M (BRK PRESS MOD VLV RR BRK PIPE) .	93-97	F	1	11516740
		8.963	NUT , FLRD TUBE, M10X1X17.3, 4.75 TUBE, 7113M (RR BRK RR PIPE)	93-97	F	1	11516402
36.		8.963	**NUT-FLARED TUBE**, MALE, MUSHROOM, M11X1.5X17.6, LCS, ZC, 4.75 TUBE OD, 35 DEG (FRT BRK PIPE)	93-97	.....	1	11515872
37.	7-A7	4.650	**CYLINDER**, BRK MAS (SEE "BRAKE MASTER CYLINDER" ILLUSTRATION IN GRP. 4.000 FOR DETAILED VIEW.) (AC-DELCO #174-714)	93-97	F	1	18021940
	7-A7	4.650	**CYLINDER**, BRK MAS (1" CYLINDER BORE) (SEE "BRAKE MASTER CYLINDER" ILLUSTRATION IN GRP. 4.000 FOR DETAILED VIEW.) (AC-DELCO #18M700)	93-97	FP (WITH POWER BRAKES)	AR	18030942
38.		8.924	**NUT-METRIC MALE** MUSHROOM FLARED TUBE (RR BRK FRT PIPE)	93-97	.....	1	11516405
39.		N.S.	**BRACKET**, RR BRK HOSE (PART OF 40)		.....		
40.	7-A11	4.680	**HOSE**, RR BRK (INCLS 4, 39) . .	93-97	F (EXC NW9)	1	22163405
41.	7-A12	4.686	**CLIP**, RR BRK PIPE	93-97	F	1	1261802
42.		N.S.	**PIPE**, RR BRK (SERV BY CPS) ...		.....	RH	
		8.965	**TUBING**, BULK (STEEL) 3/16X20 FT ROLL (BRK & FUEL FEED & FUEL RTN & EVAP EMIS) (8.964)	93-97	F	AR	12547207
		8.964	**ARMOR SHIELD**, BRK PIPE (CUT TO LENGTH) (BRK PIPE) ..	93-97	F	AR	12360513
		8.963	**NUT**, 3/8 INVERTED FLARED TUBE (RR BRK PIPE) (4.686)	93-97	.....	AR	25554171
43.	7-A12	4.686	**CLIP**, BRK COMB VLV PIPE (2 SLOT) (21.5X10.0MM)	93-97	F	2	25607191
44.		8.917	**NUT**, HEX W/CON WA 6X1X5.5 16-OD ZP 9 (FOR L36 ONLY) ...	93-97	F	2	11517293
45.		8.977	**SCREW**, 6.3X1.81X20 (FOR L36 ONLY)	93-97	F	1	11509051
46.	7-A11	4.685	**SHIELD**, BRK PIPE (FOR L36 ONLY)	93-97	F	1	10274660

RPO DEFINITIONS

J41 - BRAKE SYSTEM,POWER,FRONT DISC,REAR DRUM(CAST IRON)
L32 - ENGINE,3.4L,V6,(3.4S),SFI,OHV
L36 - ENGINE GAS, 6 CYL, 3.8K, MFI, V6, HO (ERV6 SERIES)
M49 - TRANSMISSION MAN 5 SPD, BORG WARNER, 77MM, 3.75 1ST, .76 5TH, O/D
NW9 - TRACTION CONTROL ELECTRONIC

cardiagn.com

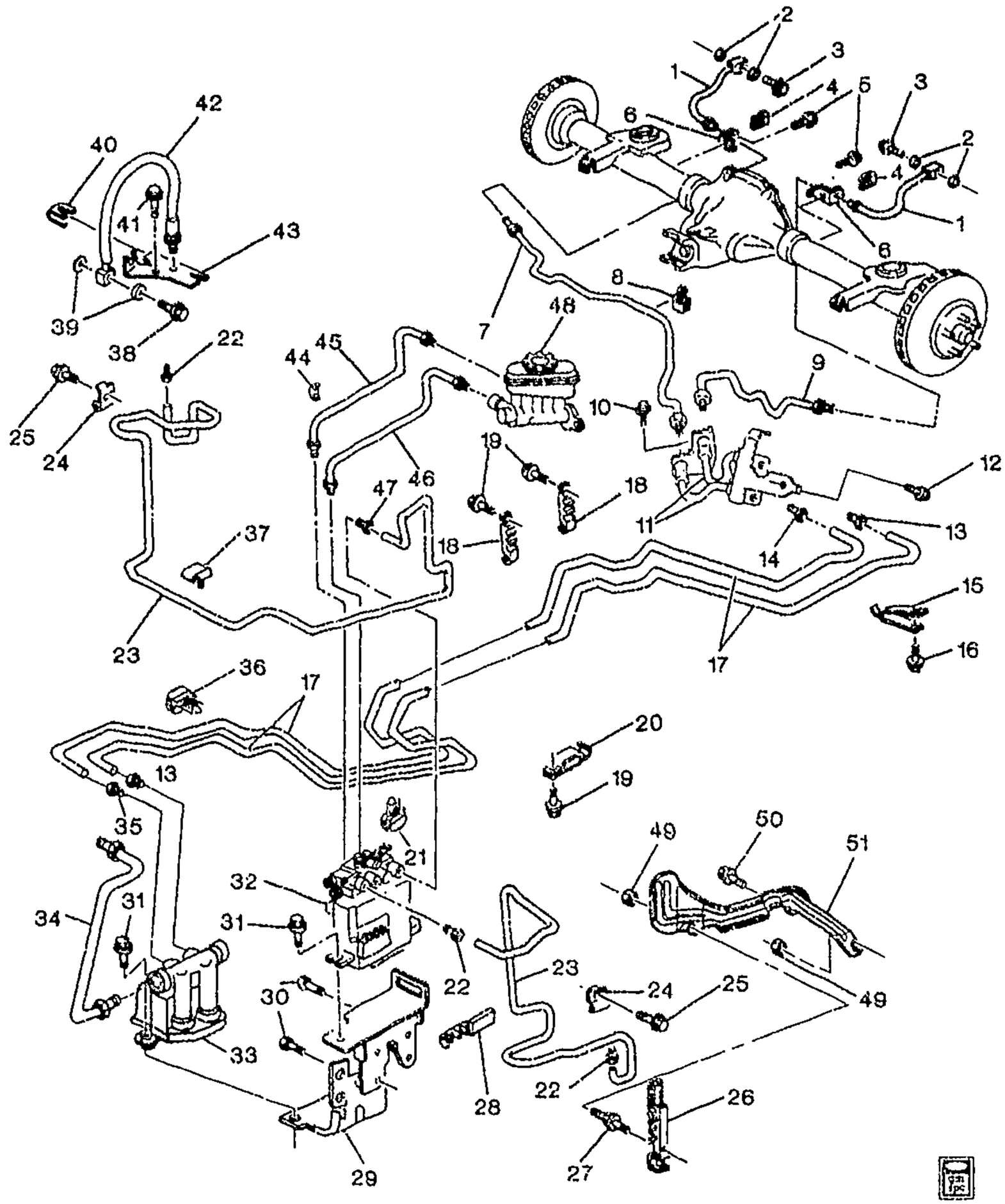

MF04-001

1995-1997 F BRAKE HOSES & PIPES (J65,NW9)

1.	7-A11	4.680	HOSE, RR BRK (INCLS 2-4, 6) ..	95-97	F (J65)	RH	18017654
	7-A11	4.680	HOSE, RR BRK (INCLS 2-4, 6) ..	95-97	F (J65)	LH	18017655
2.	7-A11	4.681	GASKET, RR BRK HOSE FTG (PART OF 1) (10.3X14.5X1.61) (COPPER) (AC-DELCO #21012386)	95-97	F (J65)	4	21012386

cardiagn.com

3.	7-A11	4.671	FITTING, RR BRK HOSE (PART OF 1) (M10 X 1.0--6G THD 8) (4.686)	95-97	F (J65)	2	10286122
4.	7-A11	4.681	RETAINER, RR BRK HOSE (PART OF 1) (5MM)	95-97	F (J65)	2	22555667
5.		8.977	SCREW, HEX W/FLAT WA (RR BRK HOSE)	95-97	F	2	12337828
6.		N.S.	BRACKET, RR BRK HOSE (PART OF 1)				
7.		N.S.	PIPE, RR BRK (SERV BY CPS)			RH	
		8.965	TUBING, BULK (STEEL) 3/16X20 FT ROLL (BRK & FUEL FEED & FUEL RTN & EVAP EMIS) (8.964)	95--97	F	AR	12547207
		8.964	ARMOR SHIELD, BRK PIPE (CUT TO LENGTH) (BRK PIPE)	95-97	F	AR	12360513
		8.963	NUT , FLRD TUBE, M10X1X17.3, 4.75 TUBE, 7113M (RR BRK RR PIPE)	95-97	F	2	11516402
8.	7-A12	4.686	CLIP, RR BRK PIPE	95--97	F	1	1261802
9.		N.S.	PIPE, RR BRK (SERV BY CPS)				
		8.965	TUBING, BULK (STEEL) 3/16X20 FT ROLL (BRK & FUEL FEED & FUEL RTN & EVAP EMIS) (8.964)	95-97	F	AR	12547207
		8.964	ARMOR SHIELD, BRK PIPE (CUT TO LENGTH) (BRK PIPE)	95-97	F	AR	12360513
		8.963	NUT , FLRD TUBE, M10X1X17.3, 4.75 TUBE, 7113M (RR BRK RR PIPE)	95-97	F	1	11516402
		8.963	NUT, M12X1X17.6, LCS, ZE, 4.75 TUBE OD, 35 DEG (RR BRK PIPE) (8.924)	95-97	F	1	11516404
10.		8.900	BOLT, HFH 5/16-18X.56 280M POR (RR BRK HOSE BRKT)	95-97		1	9440035
11.	7-A11	4.680	HOSE, RR BRK	95-97	F (NW9)	1	22163404
12.		8.977	SCREW, HEX M8X2.12X30 W/FL WA POR (RR BRK HOSE BRKT)	95-97	F	1	11504765
13.		8.963	NUT , FLRD TUBE, M10X1X17.3, 4.75 TUBE, 7113M (FRT BRK PIPE)	95-97	F	2	11516402
14.		8.963	NUT, M12X1X17.6, LCS, ZE, 4.75 TUBE OD, 35 DEG (FRT BRK PIPE) (8.924)	95-97	F	1	11516404
15.	7-N15	3.162	CLIP, FUEL FEED & RTN RR PIPE	95-97	F (NW9)	1	10277410
16.		8.977	SCREW, HEX W/FLAT WA (FUEL FEED RR PIPE CLIP)	95-97	F	1	12337828
17.		8.965	TUBING, BULK (STEEL) 3/16X20 FT ROLL (RR BRK FRT) (8.964)	95--97	F	AR	12547207
18.		N.S.	CLIP, FUEL FEED & EVAP EMIS & RTN INTER PIPE				
19.		8.977	SCREW, 6.3X1.81X20 (FUEL FEED FRT PIPE CLIP)	95-97	F	2	11509051
20.	7-N15	3.162	CLIP, FUEL FEED & EVAP EMIS & RTN INTER PIPE	95-97	F (NW9)	1	10277410
	7-N14	3.145	CLIP, FUEL FEED & EVAP EMIS & RTN INTER PIPE (3 162)	97	F (NW9)	1	10277410
21.	7-A12	4.686	CLIP, RR BRK FRT PIPE RR (USE W/NYL STEEL HARN) (8.077)	95-97	F (J65, NW9)	1	10223661

cardiagn.com

22.		8.963	**NUT**, FLRD TUBE, M10X1X17.3, 4.75 TUBE, 7113M (FRT BRK)	95-97	F	3	11516402
23.		8.965	**TUBING**, BULK (STEEL) 3/16X20 FT ROLL (FRT BRK) (8.964)	95-97	F	AR	12547207
24.	7-A12	4.686	**CLIP**, FRT BRK PIPE (BLACK) (WRAP AROUND DES)	95-97	F	LH	10254581
25.		8.977	**SCREW**, HEX W/FLAT WA (FRT BRK FRT PIPE CLIP)	95-97	F	2	12337828
26.	7-A12	4.686	**CLIP**, BRK PIPE	95-97	F (J65, NW9)	LH	10256059
27.	7-A12	4.686	**STUD**, BRK PIPE CLIP (BRK PIPE CLIP) (3.452)	95-97	F	2	25522171
28.	7-A12	4.686	**CLIP**, BRK PIPE (HORIZONTAL) (HOLDS 3 PIPES)	95-97	F	1	18016440
29.	7-A17	4.730	**BRACKET**, BRK PRESS MOD VLV	95-97	F (NW9)	1	10276063
30.	7-A17	4.730	**BOLT**, BRK PRESS MOD VLV BRKT (M10X1.5X25) (3.740)	95-97	F (LT1)	4	11515510
	7-A17	4.730	**BOLT**, BRK PRESS MOD VLV BRKT (M10X1.5X25) (3.740)	95-97	F (L36)	2	11515510
31.		8.900	**BOLT-HEX**, M8X1.25X30, 22 THD, 24MM OD, 9.8, 7114M (BRK PRESS MOD VLV)	95-97		2	11516594
32.		N.S.	**VALVE**, BRK PRESS MOD (SEE "BRAKE PRESSURE MODULATOR VALVE"ILLUSTRATION IN GRP. 4.000 FOR DETAILED VIEW.)				
33.		N.S.	**VALVE**, ELEK TRACT CONT BRK PRESS MOD (SEE "TRACTION CONTROL BRAKE PRESSURE MODULATOR VALVE" ILLUSTRATION IN GRP. 4.000 FOR DETAILED VIEW.)				
34.		N.S.	**PIPE**, ELEK TRACT CONT BRK PRESS MOD VLV (SERV BY CPS)				
		8.964	**PIPE**, 6.0M X 0.7M, 25' ROLL, CTL (BRK & FUEL FEED & FUEL RTN & EVAP EMIS)	95-97	F	AR	12300088
	7-A12	4.686	**NUT**, RR BRK COMB VLV PIPE	95-97	F	AR	10198382
35.		8.963	**NUT-FLARED TUBE**, MALE, MUSHROOM, M11X1.5X17.6, LCS, ZC, 4.75 TUBE OD, 35 DEG (FRT BRK)	95-97		1	11515872
36.	7-A12	4.686	**CLIP**, RR BRK FRT PIPE FRT (USE W/NYL STEEL HARN) (8.077)	95-97	F (J65, NW9)	1	10223661
37.	7-A12	4.686	**CLIP**, FRT BRK PIPE (BLACK) (TUBE CLIP DES)	95-97	F	RH	10254580
38.		N.S.	**FITTING**, FRT BRK HOSE (PART OF 42)				
39.		N.S.	**GASKET**, FRT BRK HOSE FTG (PART OF 42)				
40.		N.S.	**RETAINER**, FRT BRK HOSE (PART OF 42)				
41.		8.900	**BOLT**, HFH M8X1.25X18 (FRT BRK HOSE CLIP)	95-97		2	11513703
42.	7-A11	4.680	**HOSE**, FRT BRK (INCLS 38-40, 43)	95-97	F	LH	17999665

cardiagn.com

	7-A11	4.680	HOSE, FRT BRK (INCLS 38-40, 43)	95-97	F	RH	17999666
43.		N.S.	BRACKET, FRT BRK HOSE (PART OF 42)				
44.	7-A12	4.686	CLIP, BRK COMB VLV PIPE (2 SLOT) (21.5X10.0MM)	95-97	F	2	25607191
45.		N.S.	PIPE, FRT BRK COMB VLV (SERV BY CPS)				
		8.965	TUBING, BULK (STEEL) 3/16X20 FT ROLL (BRK & FUEL FEED & FUEL RTN & EVAP EMIS) (8.964)	95-97	F	AR	12547207
		8.963	NUT, FLRD TUBE, M11X1.5X17.8, 4.75 TUBE, ZC 7113M (BRK PRESS MOD VLV RR BRK PIPE)	95-97	F	1	11516740
		8.963	NUT , FLRD TUBE, M10X1X17.3, 4.75 TUBE, 7113M (RR BRK RR PIPE)	95-97	F	1	11516402
46.		N.S.	PIPE, RR BRK COMB VLV (SERV BY CPS)				
		8.965	TUBING, BULK (STEEL) 3/16X20 FT ROLL (BRK & FUEL FEED & FUEL RTN & EVAP EMIS) (8.964)	95-97	F	AR	12547207
		8.963	NUT, FLRD TUBE, M11X1.5X17.8, 4.75 TUBE, ZC 7113M (BRK PRESS MOD VLV RR BRK PIPE)	95-97	F	1	11516740
		8.963	NUT , FLRD TUBE, M10X1X17.3, 4.75 TUBE, 7113M (RR BRK RR PIPE)	95-97	F	1	11516402
47.		8.963	NUT-FLARED TUBE, MALE, MUSHROOM, M11X1.5X17.6, LCS, ZC, 4.75 TUBE OD, 35 DEG (FRT BRK PIPE)	95-97		1	11515872
48.	7-A7	4.650	CYLINDER, BRK MAS (SEE "BRAKE MASTER CYLINDER" ILLUSTRATION IN GRP. 4.000 FOR DETAILED VIEW.) (AC-DELCO #174-714)	95-97	F	1	18021940
	7-A7	4.650	CYLINDER, BRK MAS (1" CYLINDER BORE) (SEE "BRAKE MASTER CYLINDER" ILLUSTRATION IN GRP. 4.000 FOR DETAILED VIEW.) (AC-DELCO #18M700)	95-97	FP (WITH POWER BRAKES)	AR	18030942
49.		8.917	NUT, HEX W/CON WA 6X1X5.5 16-OD ZP 9 (BRK PIPE CLIP)	95-97	F	2	11517293
50.		8.977	SCREW, 6.3X1.81X20 (BRK PIPE SHLD)	95-97	F	1	11509051
51.	7-A11	4.685	SHIELD, BRK PIPE	95-97	F (LT1)	1	10274660
	7-A11	4.685	SHIELD, BRK PIPE	95-97	F (L36)	1	10274660

RPO DEFINITIONS

J65 - BRAKE SYSTEM,POWER,FRONT AND REAR DISC
LT1 - ENGINE-GAS, 8 CYL, 5.7L(5.7P),MFI,HO
L36 - ENGINE GAS, 6 CYL, 3.8K, MFI, V6, HO (ERV6 SERIES)
NW9 - TRACTION CONTROL ELECTRONIC

cardiagn.com

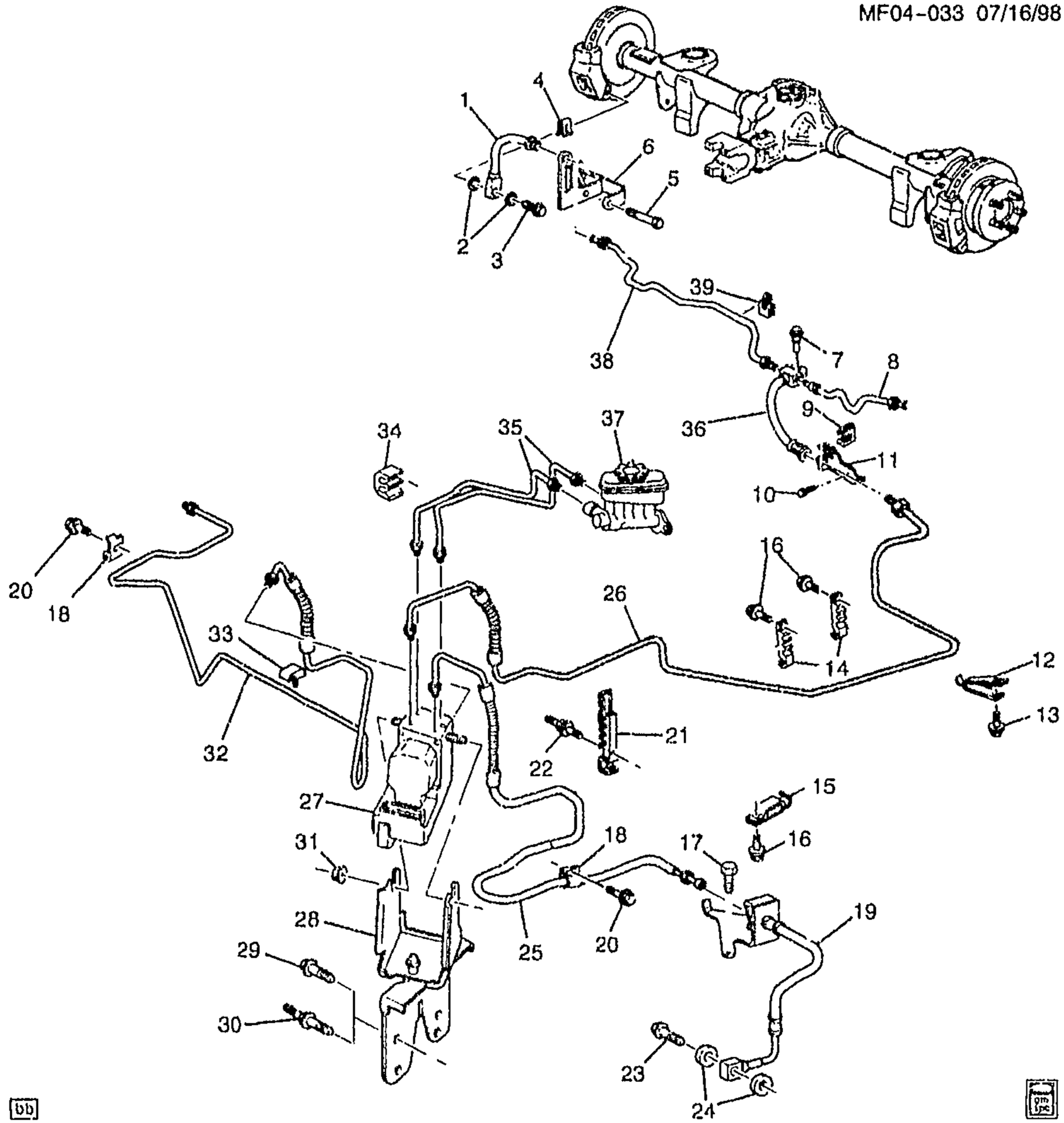

MF04-033

1998-2002 F BRAKE HOSES & PIPES (J65,EXC NW9)

1.	7-A11	4.680	HOSE, RR BRK (INCLS 2, 3)	98-02	F	2	22163484
2.		N.S.	WASHER, RR BRK HOSE (PART OF 1)		.....		
3.		N.S.	BOLT, RR BRK HOSE FTG (PART OF 1)		.....		
4.	7-A11	4.681	RETAINER, RR BRK HOSE (5MM)	98-99	F (J65)	2	22555667
	7-A11	4.681	RETAINER, RR BRK HOSE (5MM)	00-02	F	2	22555667

cardiagn.com

5.	7-B19	5.381	**BOLT**, R/AXL LWR CONT ARM (M12X1.75X105, 26.6 OD) (5.383) (AC-DELCO #22657681)	98-02	F	2	22657681
		8.917	**NUT**, HEX FLG PREVAILING TORQ (M12X1.75X14) (ZO 10) (R/AXL LWR CONT ARM)	98-02		4	11515744
6.	7-A18	4.785	**BRACKET**, PARK BRK RR CBL	98-02	F (J65)	LH	10289539
	7-A18	4.785	**BRACKET**, PARK BRK RR CBL	98-02	F (J65)	RH	10289540
7.	7-A11	4.681	**BOLT**, RR BRK HOSE FTG (5/16X18.00X1 3/16) (W/SHOULDER)	98-02	F (EXC NW9)	1	15630743
8.	7-A11	4.685	**PIPE**, RR BRK	98	F (J65) (EXC NW9)	LH	10289429
	7-A11	4.685	**PIPE**, RR BRK	99-02	F (LS1) (EXC NW9)	LH	10289429
	7-A11	4.685	**PIPE**, RR BRK	99-02	F (L36)	LH	10289429
9.	7-A11	4.681	**RETAINER**, RR BRK HOSE (PART OF 36) (5MM)	98-99	F (J65)	2	22555667
	7-A11	4.681	**RETAINER**, RR BRK HOSE (PART OF 36) (5MM)	00-02	F	2	22555667
10.		8.977	**SCREW**, HEX M8X2.12X30 W/FL WA POR (RR BRK HOSE BRKT)	98-02	F	1	11504765
11.		N.S.	**BRACKET**, RR BRK HOSE (PART OF 36)				
12.	7-N15	3.162	**CLIP**, FUEL FEED & EVAP EMIS & RTN INTER PIPE	98-02	F	1	10278177
	7-N14	3.145	**CLIP**, FUEL FEED & EVAP EMIS & RTN INTER PIPE (3.162)	98-02	F	1	10278177
13.		8.977	**SCREW**, HEX W/FLAT WA (FUEL FEED RR PIPE CLIP)	98-02	F	1	12337828
14.		N.S.	**CLIP**, FUEL FEED & EVAP EMIS & RTN INTER PIPE				
15.	7-N15	3.162	**CLIP**, FUEL FEED & RTN RR PIPE	98	F (EXC NW9)	1	10288279
	7-N15	3.162	**CLIP**, FUEL FEED & RTN RR PIPE	99-02	F (LS1) (EXC NW9)	1	10288279
	7-N15	3.162	**CLIP**, FUEL FEED & RTN RR PIPE	99-02	F (L36)	1	10288279
16.		8.977	**SCREW**, HEX W/FLAT WA (FUEL FEED FRT PIPE CLIP)	98-02	F	3	12337828
17.		8.900	**BOLT**, HFH M8X1.25X18 (FRT BRK HOSE CLIP)	98-02	F	2	11513703
18.	7-A12	4.686	**CLIP**, FRT BRK PIPE (PART OF 25, 32) (BLACK) (WRAP AROUND DES)	98-02	F	2	10254581
19.	7-A11	4.680	**HOSE**, FRT BRK (INCLS 23, 24)	98-02	F	LH	22163505
	7-A11	4.680	**HOSE**, FRT BRK (INCLS 23, 24)	98-02	F	RH	22163506
20.		8.977	**SCREW**, HEX W/FLAT WA (FRT BRK FRT PIPE CLIP)	98-02		2	12337828
21.	7-A12	4.686	**CLIP**, BRK PIPE	98-02	F	LH	10256059
22.	7-A12	4.686	**STUD**, BRK PIPE CLIP (3.452)	98-02	F	1	25522171
23.	7-A12	4.686	**FITTING**, FRT BRK HOSE (PART OF 19)	98	F	2	22163795
		N.S.	**FITTING**, FRT BRK HOSE (PART OF 19)	99-02			
24.	7-A11	4.681	**GASKET**, RR BRK HOSE FTG (PART OF 19) (10.3X14.5X1.61) (COPPER) (AC-DELCO #21012386)	98	F (J65)	4	21012386
		N.S.	**GASKET**, RR BRK HOSE FTG (PART OF 19)	99-02			
25.	7-A11	4.685	**PIPE**, FRT BRK (INCLS 18)	98-02	F	LH	10307912

cardiagn.com

		8.963	NUT , FLRD TUBE, M10X1X17.3, 4.75 TUBE, 7113M (FRT BRK) ...	98-02	F	2	11516402
26.	7-A11	4.685	PIPE, RR BRK FRT	98	F (EXC NW9)	1	10293966
	7-A11	4.685	PIPE, RR BRK FRT	99-02	F (LS1) (EXC NW9)	1	10293966
	7-A11	4.685	PIPE, RR BRK FRT	99-02	F (L36)	1	10293966
		8.963	NUT, M12X1X17.6, LCS, ZE, 4.75 TUBE OD, 35 DEG (RR BRK FRT PIPE) (8.924)	98-02	F	1	11516404
		8.963	NUT , FLRD TUBE, M10X1X17.3, 4.75 TUBE, 7113M (RR BRK FRT PIPE)	98-02	F	1	11516402
27.	7-A15	4.720	VALVE, BRK PRESS MOD (W/ELEK BRK CONT MDL) (4.730)	98	F (EXC NW9)	1	12453256
	7-A17	4.730	VALVE, BRK PRESS MOD (W/ELEK BRK CONT MDL)	99-02	F (EXC NW9)	1	10424856
	7-A15	4.720	VALVE, BRK PRESS MOD (W/ELEK BRK CONT MDL) (4.730)	99-02	F (EXC NW9)	1	10424856
28.	7-A17	4.730	BRACKET, BRK PRESS MOD VLV	98-02	F	1	10287204
		N.S.	BRACKET, BRK PRESS MOD VLV	02	.....		
29.	7-A17	4.730	BOLT, BRK PRESS MOD VLV BRKT (M10X1.5X25) (3.740)	98-02	F (LS1)	4	11515510
		N.S.	BOLT, BRK PRESS MOD VLV BRKT	02	.....		
30.	7-D20	6.635	STUD, P/S FLUID RSVR BRKT (M10X1.5/30/M6X1X13) (8.981) ..	98-02	F (L36)	4	11516976
31.		8.917	NUT, HFH, M8X1.25, 17.9 OD, 738 THK, 13MM HEX, 10, ZF (BRK PRESS MOD VLV) (8.915) (AC-DELCO #11514596)	98-02	F	2	11514596
32.	7-A11	4.685	PIPE, FRT BRK (INCLS 18, 33) ...	98-02	F	RH	10307911
		8.963	NUT , FLRD TUBE, M10X1X17.3, 4.75 TUBE, 7113M (FRT BRK) ...	98-02	F	2	11516402
33.	7-A12	4.686	CLIP, FRT BRK PIPE (PART OF 32) (BLACK) (TUBE CLIP DES) ..	98-02	F	2	10254580
34.	7-A12	4.686	CLIP, BRK PRESS MOD VLV INTER PIPE (PART OF 35)	98-02	F	2	10293250
35.	7-A11	4.685	PIPE, BRK PROPN VLV (INCLS 34) (CPS)	98-02	F	1	10409051
		8.963	NUT , FLRD TUBE, M10X1X17.3, 4.75 TUBE, 7113M (FRT BRK PIPE)	98-02	F	1	11516402
		8.924	NUT-METRIC MALE MUSHROOM FLARED TUBE (FRT BRK PIPE)	98-02	F	2	11516405
		8.963	NUT-FLARED TUBE, MALE, MUSHROOM, M11X1.5X17.6, LCS, ZC, 4.75 TUBE OD, 35 DEG (FRT BRK PIPE)	98-02	F	1	11515872
36.	7-A11	4.680	HOSE, RR BRK (INCLS 9, 11) ...	98-02	F	AR	22163405
37.	7-A7	4.650	CYLINDER, BRK MAS (SEE "BRAKE MASTER CYLINDER" ILLUSTRATION IN GRP. 4.000 FOR DETAILED VIEW.) (AC-DELCO #174-749)	98-02	F	1	18026276

cardiagn.com

							MF04-033
38.	7-A11	4.685	PIPE, RR BRK	98	F (J65) (EXC NW9)	RH	10289430
	7-A11	4.685	PIPE, RR BRK	99-02	F (LS1) (EXC NW9)	RH	10289430
	7-A11	4.685	PIPE, RR BRK	99-02	F (L36)	RH	10289430
39.	7-A12	4.686	CLIP, RR BRK PIPE	98-02	F	1	1261802

RPO DEFINITIONS

J65 – BRAKE SYSTEM,POWER,FRONT AND REAR DISC
LS1 – ENGINE GAS, 8 CYL, 5.7L, SFI, ALUMINUM ENGINE
L36 – ENGINE GAS, 6 CYL, 3.8K, MFI, V6, HO (ERV6 SERIES)
NW9 – TRACTION CONTROL ELECTRONIC

cardiagn.com

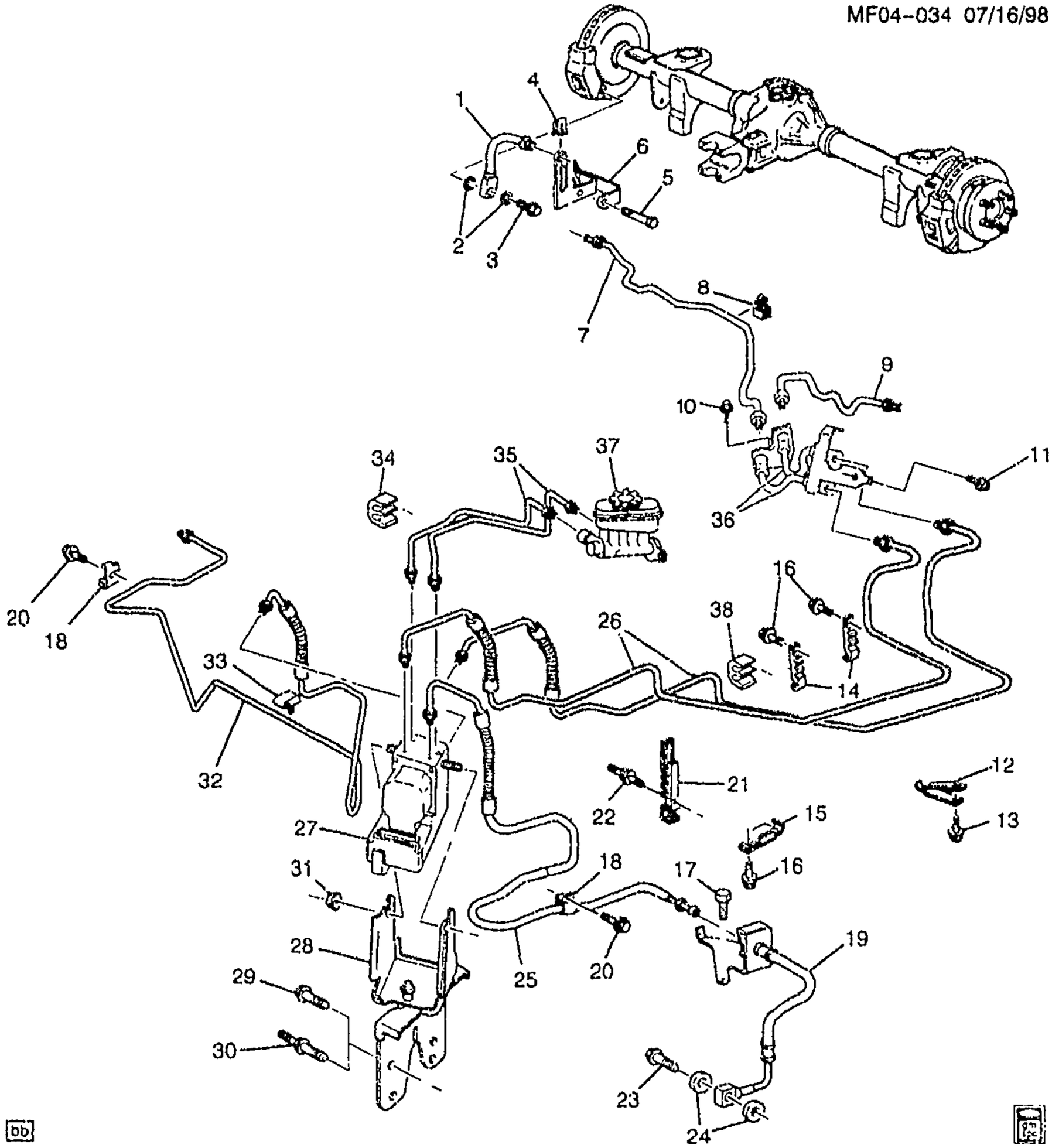

bb

MF04-034

1998-2002 F BRAKE HOSES & PIPES (J65,NW9)

1.	7-A11	4.680	HOSE, RR BRK (INCLS 2, 3)	98-02	F	2	22163484
2.		N.S.	WASHER, RR BRK HOSE (PART OF 1)		.....		
3.		N.S.	BOLT, RR BRK HOSE FTG (PART OF 1)		.....		
4.	7-A11	4.681	RETAINER, RR BRK HOSE (5MM)	98-99	F (J65)	2	22555667

cardiagn.com

	7-A11	4.681	RETAINER, RR BRK HOSE (5MM)	00-02	F	2	22555667
5.	7-B19	5.381	BOLT, R/AXL LWR CONT ARM (M12X1.75X105, 26.6 OD) (5.383) (AC-DELCO #22657681)	98-02	F	2	22657681
		8.917	NUT, HEX FLG PREVAILING TORQ (M12X1.75X14) (ZO 10) (R/AXL LWR CONT ARM)	98-02		4	11515744
6.	7-A18	4.785	BRACKET, PARK BRK RR CBL	98-02	F (J65)	LH	10289539
	7-A18	4.785	BRACKET, PARK BRK RR CBL	98-02	F (J65)	RH	10289540
7.	7-A11	4.685	PIPE, RR BRK	98	F (J65, NW9)	RH	10289431
	7-A11	4.685	PIPE, RR BRK	99-02	F (L36)	RH	10289430
	7-A11	4.685	PIPE, RR BRK	99-02	F (LS1, NW9)	RH	10289431
8.	7-A12	4.686	CLIP, RR BRK PIPE	98-02	F	1	1261802
9.	7-A11	4.685	PIPE, RR BRK	98	F (J65, NW9)	LH	10289432
	7-A11	4.685	PIPE, RR BRK	99-02	F (L36)	LH	10289429
	7-A11	4.685	PIPE, RR BRK	99-02	F (LS1, NW9)	LH	10289432
10.		8.900	BOLT, HFH 5/16-18X.56 280M POR (RR BRK HOSE BRKT)	98-02	F	1	9440035
11.		8.977	SCREW, HEX M8X2.12X30 W/FL WA POR (RR BRK HOSE BRKT)	98-02	F	1	11504765
12.	7-N15	3.162	CLIP, FUEL FEED & EVAP EMIS & RTN INTER PIPE	98-02	F	1	10278177
	7-N14	3.145	CLIP, FUEL FEED & EVAP EMIS & RTN INTER PIPE (3.162)	98-02	F	1	10278177
13.		8.977	SCREW, HEX W/FLAT WA (FUEL FEED RR PIPE CLIP)	98-02	F	1	12337828
14.		N.S.	CLIP, FUEL FEED & EVAP EMIS & RTN INTER PIPE				
15.	7-N15	3.162	CLIP, FUEL FEED & RTN RR PIPE	98	F (NW9)	1	10277410
	7-N15	3.162	CLIP, FUEL FEED & RTN RR PIPE	99-02	F (LS1, NW9)	1	10277410
	7-N15	3.162	CLIP, FUEL FEED & RTN RR PIPE	99-02	F (L36)	1	10288279
16.		8.977	SCREW, HEX W/FLAT WA (FUEL FEED FRT PIPE CLIP)	98-02	F	3	12337828
17.		8.900	BOLT, HFH M8X1.25X18 (FRT BRK HOSE CLIP)	98-02	F	2	11513703
18.	7-A12	4.686	CLIP, FRT BRK PIPE (PART OF 25, 32) (BLACK) (WRAP AROUND DES)	98-02	F	2	10254581
19.	7-A11	4.680	HOSE, FRT BRK (INCLS 23, 24)	98-02	F	LH	22163505
	7-A11	4.680	HOSE, FRT BRK (INCLS 23, 24)	98-02	F	RH	22163506
20.		8.977	SCREW, HEX W/FLAT WA (FRT BRK FRT PIPE CLIP)	98-02		2	12337828
21.	7-A12	4.686	CLIP, BRK PIPE	98-02	F	LH	10256059
22.	7-A12	4.686	STUD, BRK PIPE CLIP (3.452)	98-02	F	1	25522171
23.	7-A12	4.686	FITTING, FRT BRK HOSE (PART OF 19)	98	F	2	22163795
		N.S.	FITTING, FRT BRK HOSE (PART OF 19)	99-02			
24.	7-A11	4.681	GASKET, RR BRK HOSE FTG (PART OF 19) (10.3X14.5X1.61) (COPPER) (AC-DELCO #21012386)	98	F (J65)	4	21012386
		N.S.	GASKET, RR BRK HOSE FTG (PART OF 19)	99-02			
25.	7-A11	4.685	PIPE, FRT BRK (INCLS 18)	98-02	F	LH	10307912

cardiagn.com

		8.963	NUT, FLRD TUBE, M10X1X17.3, 4.75 TUBE, 7113M (FRT BRK) ...	98-02	F	2	11516402
26.	7-A11	4.685	PIPE, RR BRK FRT (INCLS 38) ...	98	F (NW9)	1	10293967
	7-A11	4.685	PIPE, RR BRK FRT (INCLS 38) ...	99-02	F (L36)	1	10293966
	7-A11	4.685	PIPE, RR BRK FRT (INCLS 38) ...	99-02	F (LS1, NW9)	1	10293967
		8.963	NUT, M12X1X17.6, LCS, ZE, 4.75 TUBE OD, 35 DEG (RR BRK FRT PIPE) (8.924)	98-02	F	1	11516404
		8.963	NUT, FLRD TUBE, M10X1X17.3, 4.75 TUBE, 7113M (RR BRK FRT PIPE)	98-02	F	1	11516402
27.	7-A17	4.730	VALVE, BRK PRESS MOD (W/ELEK BRK & TRACT CONT MDL)	98	F (LS1, NW9)	1	12453255
	7-A17	4.730	VALVE, BRK PRESS MOD (W/ELEK BRK & TRACT CONT MDL)	99-02	F (LS1, NW9)	1	10424855
	7-A17	4.730	VALVE, BRK PRESS MOD (W/ELEK BRK & TRACT CONT MDL)	99-02	F (L36, NW9)	1	10424857
	7-A15	4.720	VALVE, BRK PRESS MOD (W/ELEK BRK & TRACT CONT MDL) (4.730)	02	F (LS1, NW9)	1	10424855
	7-A15	4.720	VALVE, BRK PRESS MOD (W/ELEK BRK & TRACT CONT MDL) (4.730)	02	F (L36, NW9)	1	10424857
28.	7-A17	4.730	BRACKET, BRK PRESS MOD VLV	98-02	F	1	10287204
		N.S.	BRACKET, BRK PRESS MOD VLV	02	....		
29.	7-A17	4.730	BOLT, BRK PRESS MOD VLV BRKT (M10X1.5X25) (3.740)	98-02	F (LS1)	4	11515510
		N.S.	BOLT, BRK PRESS MOD VLV BRKT	02	.....		
30.	7-D20	6.635	STUD, P/S FLUID RSVR BRKT (M10X1.5/30/M6X1X13) (8.981) ..	98-02	F (L36)	4	11516976
31.		8.917	NUT, HFH, M8X1.25, 17.9 OD, 738 THK, 13MM HEX, 10, ZF (BRK PRESS MOD VLV) (8.915) (AC-DELCO #11514596)	98-02	F	2	11514596
32.	7-A11	4.685	PIPE, FRT BRK (INCLS 18, 33) ...	98-02	F	RH	10307911
		8.963	NUT, FLRD TUBE, M10X1X17.3, 4.75 TUBE, 7113M (FRT BRK) ...	98-02	F	2	11516402
33.	7-A12	4.686	CLIP, FRT BRK PIPE (PART OF 32) (BLACK) (TUBE CLIP DES) ..	98-02	F	2	10254580
34.	7-A12	4.686	CLIP, BRK PRESS MOD VLV INTER PIPE (PART OF 35)	98-02	F	2	10293250
35.	7-A11	4.685	PIPE, BRK PROPN VLV (INCLS 34) (CPS)	98-02	F	1	10409051
		8.963	NUT, FLRD TUBE, M10X1X17.3, 4.75 TUBE, 7113M (FRT BRK PIPE)	98-02	F	1	11516402
		8.924	NUT-METRIC MALE MUSHROOM FLARED TUBE (FRT BRK PIPE)	98-02	F	2	11516405

cardiagn.com

		8.963	NUT–FLARED TUBE, MALE, MUSHROOM, M11X1.5X17.6, LCS, ZC, 4.75 TUBE OD, 35 DEG (FRT BRK PIPE)	98–02	F	1	11515872
36.	7–A11	4.680	HOSE, RR BRK	98–02	F	1	22163404
37.	7–A7	4.650	CYLINDER, BRK MAS (SEE "BRAKE MASTER CYLINDER" ILLUSTRATION IN GRP. 4.000 FOR DETAILED VIEW.) (AC–DELCO #174–749)	98–02	F	1	18026276
38.	7–A12	4.686	CLIP, RR BRK FRT PIPE (PART OF 26) (2 SLOT) (21.5X10.0MM) .	98	F (NW9)	3	25607191
	7–A12	4.686	CLIP, RR BRK FRT PIPE (PART OF 26) (2 SLOT) (21.5X10.0MM) .	99–02	F (LS1, NW9)	3	25607191

RPO DEFINITIONS

J65 -- BRAKE SYSTEM,POWER,FRONT AND REAR DISC
LS1 -- ENGINE GAS, 8 CYL, 5.7L, SFI, ALUMINUM ENGINE
L36 -- ENGINE GAS, 6 CYL, 3.8K, MFI, V6, HO (ERV6 SERIES)
NW9 -- TRACTION CONTROL ELECTRONIC

cardiagn.com

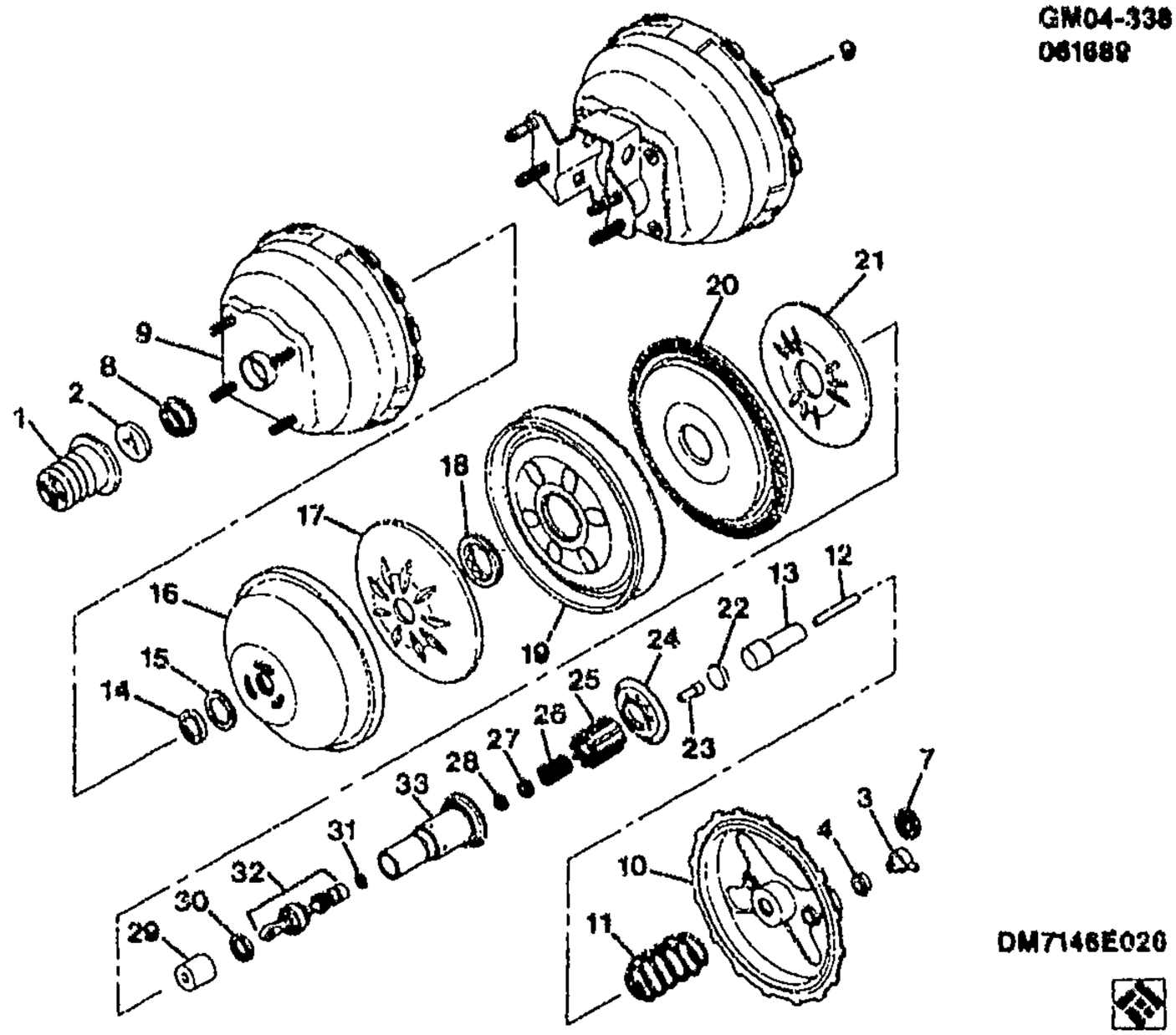

GM04–338F

1993 F BRAKE BOOSTER/VACUUM

1.		N.S.	BOOT, P/B BOOS RR HSG (*KIT1)				
2.		N.S.	FILTER, P/B BOOS AIR (*KIT1)				
3.		DISCON	VALVE KIT, P/B BOOS VAC CHK (*KIT1)	93	F	1	18021440
	7–A19	4.955	VALVE KIT, P/B BOOS VAC CHK (W/VALVE & GROMMET) (*KIT1) (AC–DELCO #179–1266)	93	F	1	18022219
4.	7–A19	4.955	GROMMET, P/B BOOS VAC CHK VLV (PART OF 3) (*KIT1)	93	F	1	18060007
7.		N.S.	SEAL, P/B BOOS FRT HSG (*KIT1)				
8.		N.S.	BEARING, P/B BOOS PWR PSTN PRIM (*KIT1)				
9.		N.S.	HOUSING, P/B BOOS RR (DASH MTG) (*KIT1)				
		N.S.	HOUSING, P/B BOOS RR (BRKT MTG) (*KIT1)				
10.		N.S.	HOUSING, P/B BOOS FRT (*KIT1)				
11.		N.S.	SPRING, P/B BOOS PWR PSTN RTN (*KIT1)				

cardiagn.com

12.		N.S.	**ROD**, P/B BOOS PUSH (*KIT1)				
13.		N.S.	**RETAINER**, P/B BOOS PWR PSTN REACTION (*KIT1)				
14.		N.S.	**SILENCER**, P/B BOOS PWR HEAD (*KIT1)				
15.		N.S.	**RETAINER**, P/B BOOS PRIM DIAPH (*KIT1)				
16.		N.S.	**DIAPHRAGM**, P/B BOOS PRIM (*KIT1)				
17.		N.S.	**SUPPORT**, P/B BOOS PRIM DIAPH (*KIT1)				
18.		N.S.	**BEARING**, P/B BOOS PWR PSTN SECD (*KIT1)				
19.		N.S.	**DIVIDER**, P/B BOOS HSG (*KIT1)				
20.		N.S.	**DIAPHRAGM**, P/B BOOS SECD (*KIT1)				
21.		N.S.	**SUPPORT**, P/B BOOS SECD DIAPH (*KIT1)				
22.		N.S.	**DISC**, P/B BOOS PWR PSTN REACTION (*KIT1)				
23.		N.S.	**PISTON**, P/B BOOS PWR PSTN REACTION (*KIT1)				
24.		N.S.	**RETAINER**, REACTION BODY (*KIT1)				
25.		N.S.	**BODY**, REACTION (*KIT1)				
26.		N.S.	**SPRING**, AIR VALVE (*KIT1)				
27.		N.S.	**BUMPER**, REACTION (*KIT1)				
28.		N.S.	**RING**, RETAINING (*KIT1)				
29.		N.S.	**SILENCER**, P/B BOOS AIR (*KIT1)				
30.		N.S.	**RETAINER**, P/B BOOS AIR SIL (*KIT1)				
31.		N.S.	**O RING** (*KIT1)				
32.		N.S.	**ROD ASM**, AIR VALVE PUSH (*KIT1)				
33.		N.S.	**PISTON**, P/B BOOS PWR (*KIT1)				

SERVICE KITS

1.	7--A19	4.901	**BOOSTER**, P/B (INCLS 1–33) (AC–DELCO #178–488)	93	F	1	18029982
	7–A18	4.805	**BOOSTER**, P/B (INCLS 1–33) (4.901) (AC–DELCO #178–488)	93	F	1	18029982

cardiagn.com

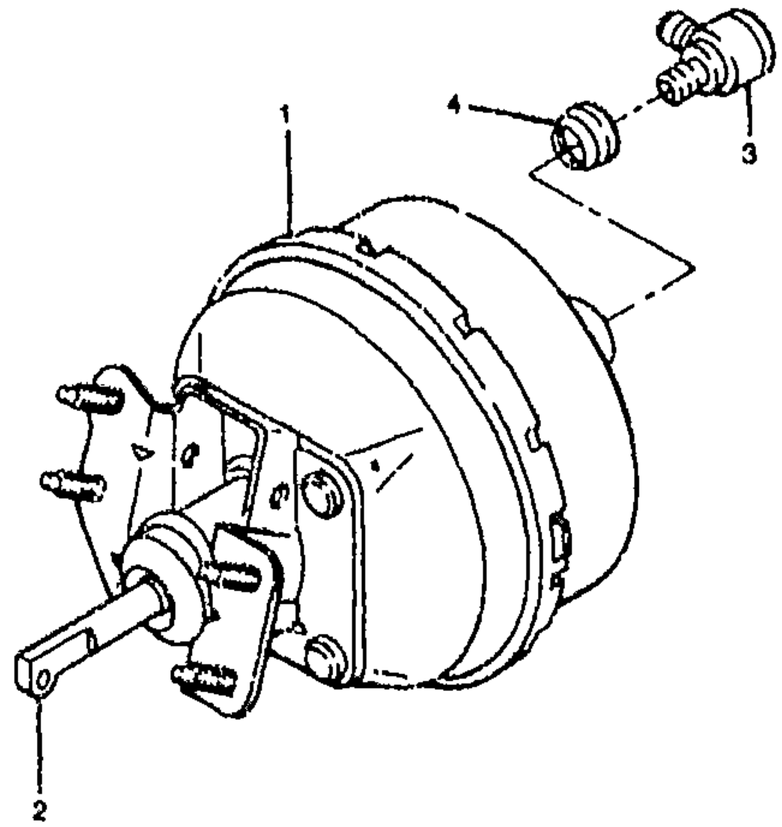

DM2015E002

GM04-423F

1994-2002 F BRAKE BOOSTER

1.	7-A19	4.901	BOOSTER, P/B (INCLS 2) (AC-DELCO #178-488)	94-02	F	1	18029982
	7-A18	4.805	BOOSTER, P/B (INCLS 2) (4.901) (AC-DELCO #178-488)	94-02	F	1	18029982
2.		N.S.	ROD, VLV PUSH (PART OF 1) ...		.....		
3.		DISCON	VALVE KIT, P/B BOOS VAC CHK (INCLS 4)	94-95	F	1	18021440
	7-A19	4.955	VALVE KIT, P/B BOOS VAC CHK (INCLS 4) (W/VALVE & GROMMET) (AC-DELCO #179-1266)	94-02	F	1	18022219
4.	7-A19	4.955	GROMMET, P/B BOOS VAC CHK VLV (PART OF 3)	94-02	F	1	18060007

cardiagn.com

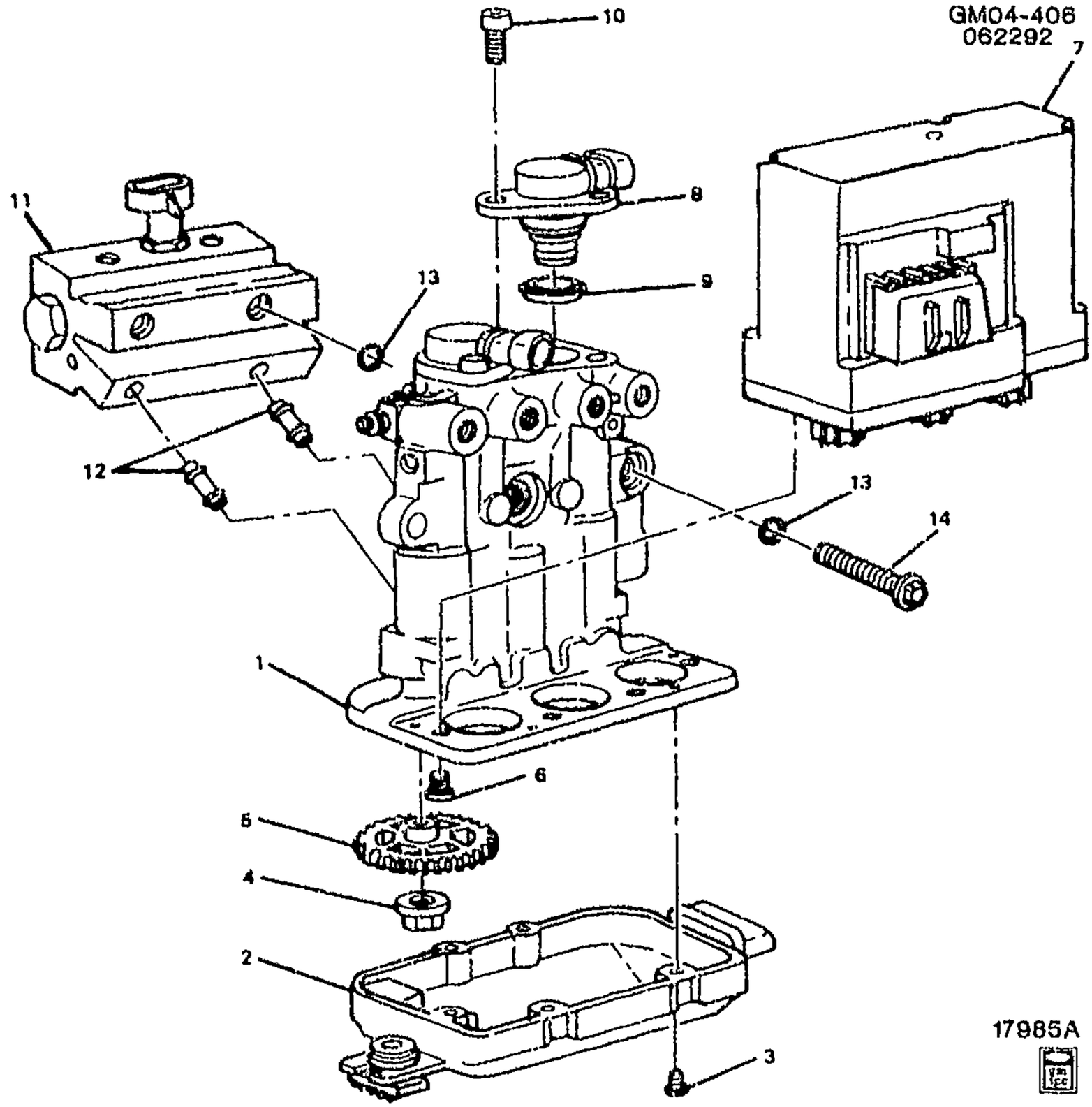

GM04–406

1993–1997 F BRAKE PRESSURE MODULATOR VALVE ABS VI (DELCO)

1.	N.S.	VALVE, BRK PRESS MOD (*KIT1)	.....
2.	N.S.	COVER, GEAR (*KIT4)	.....
3.	N.S.	BOLT, GEAR CVR (*KIT4)	.....
4.	N.S.	NUT, GEAR (*KIT1, KIT5)	.....
5.	N.S.	GEAR, BRK PRESS MOD VLV (*KIT5)	.....
6.	N.S.	BOLT, MTR (*KIT2)	.....
7.	N.S.	MOTOR, MOD VLV (*KIT2)	.....
8.	N.S.	SOLENOID, BRK (*KIT1, KIT3) ...	.....
9.	N.S.	SEAL, BRK SOL (*KIT1, KIT3) ...	.....
10.	N.S.	BOLT, BRK SOL (*KIT1, KIT3)	.....
11.	N.S.	VALVE, BRK COMB (*KIT7)	.....
12.	N.S.	TUBE, TRFER (*KIT1, KIT6, KIT7)	.....
13.	N.S.	SEAL, BRK COMB VLV (O–RING) (*KIT1, KIT6, KIT7) ...	.....
14.	N.S.	BOLT, BRK COMB VLV (*KIT6) ...	.....

cardiagn.com

SERVICE KITS

1.	7–A17	4.730	**VALVE KIT**, BRK PRESS MOD (INCLS 1, 4, 8, 9, 10, 12, 13) (AC–DELCO #18029923)	93–97	F	1	18029923
2.	7–A17	4.730	**MOTOR KIT**, BRK PRESS MOD VLV (INCLS 6, 7) (4.647) (AC–DELCO #18024454)	93–97	F	1	18024454
3.	7–A17	4.730	**VALVE KIT**, BRK M/CYL SOL (INCLS 8–10) (AC–DELCO #18019204)	93–97	F	2	18019204
4.	7–A17	4.730	**COVER KIT**, BRK PRESS MOD VLV GR (INCLS 2, 3)	93–97	F	1	18020026
5.	7–A17	4.730	**GEAR KIT**, ELEK TRACT CONT BRK PRESS MOD VLV (INCLS 4, 5) (WITH NUT) (AC–DELCO #18021106)	95–97	F (NW9)	2	18021106
	7–A17	4.730	**GEAR KIT**, ELEK TRACT CONT BRK PRESS MOD VLV (W/NUT) (INCLS 4, 5) (WITH NUT) (AC–DELCO #18021106)	93–97	F	3	18021106
6.	7–A17	4.730	**BOLT KIT**, BRK PRESS MOD VLV (INCLS 12–14) (WITH SEALS) (4.648)	93–97	F	1	18019492
7.	7–A13	4.690	**VALVE**, BRK COMB (INCLS 11–13) (AC–DELCO #18020589)	93–97	F	1	18020589

RPO DEFINITIONS
NW9 – TRACTION CONTROL ELECTRONIC

cardiagn.com

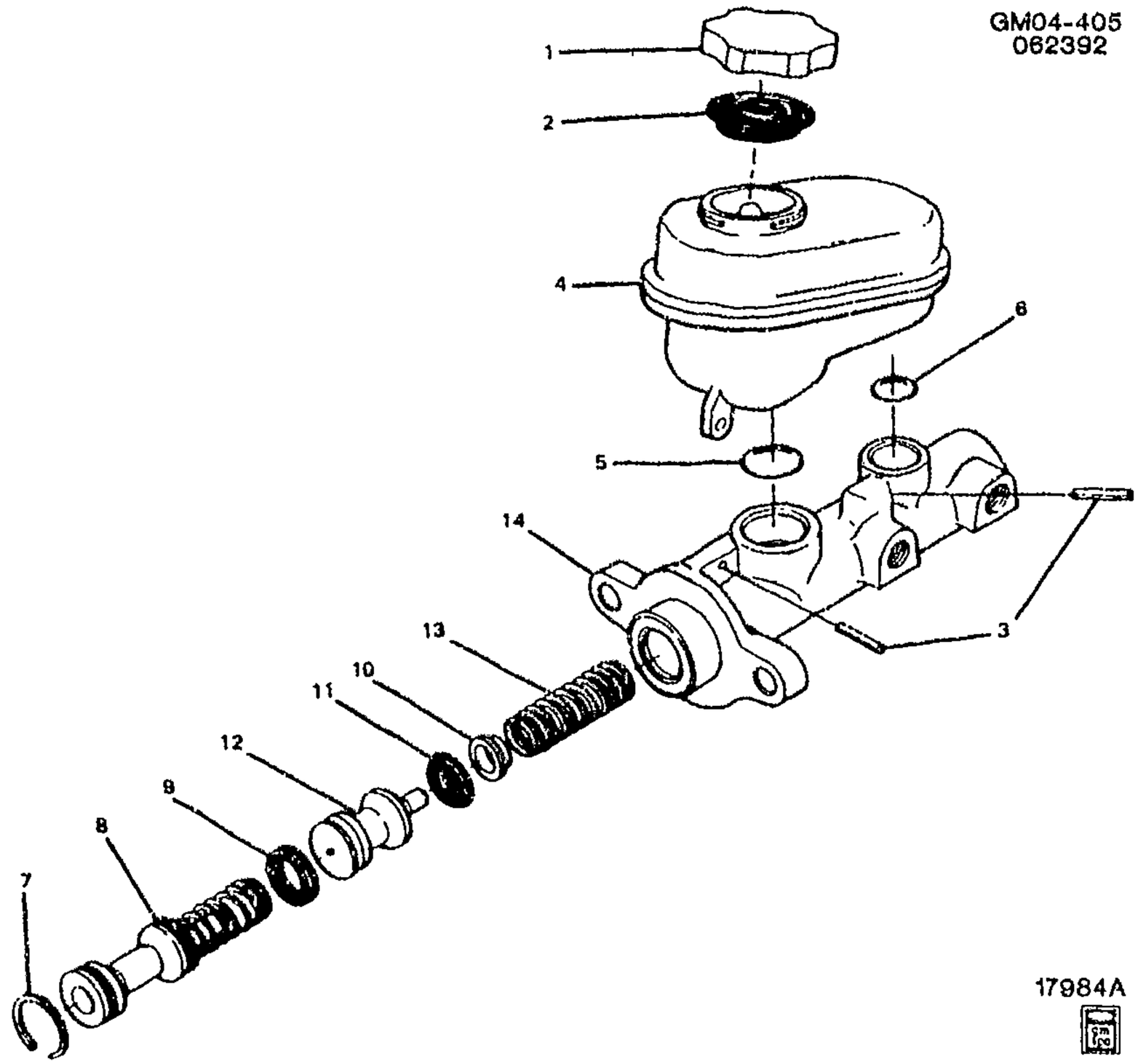

1993–2002 F BRAKE MASTER CYLINDER

1.	7–A7	4.651	CAP, BRK M/CYL RSVR (INCLS 2) (*KIT1)	93–02	F	1	18060186
2.		N.S.	DIAPHRAGM, BRK M/CYL RSVR (PART OF 1) (*KIT1)				
3.		N.S.	PIN, BRK M/CYL RSVR (*KIT1, KIT3)				
4.		N.S.	RESERVOIR, BRK M/CYL (*KIT1, KIT3)				
5.		N.S.	GROMMET, BRK M/CYL RSVR (*KIT1, KIT3)				
6.		N.S.	GROMMET, BRK M/CYL RSVR (*KIT1, KIT3)				
7.		N.S.	RING, BRK M/CYL PRIM PSTN RET (*KIT1, KIT2)				
8.		N.S.	PISTON, BRK M/CYL PRIM (*KIT1, KIT2)				
9.		N.S.	SEAL, BRK M/CYL SECD PSTN SECD (*KIT1, KIT2)				
10.		N.S.	RETAINER, BRK M/CYL SECD PSTN SPR (*KIT1, KIT2)				

cardiagn.com

11.		N.S.	**SEAL**, BRK M/CYL SECD PSTN PRIM (*KIT1, KIT2)				
12.	7–A7	4.653	**PISTON**, BRK M/CYL SECD (*KIT1)	93–97	F	1	18019463
	7–A7	4.653	**PISTON**, BRK M/CYL SECD (*KIT1)	98–02	F	1	18029857
13.		N.S.	**SPRING**, BRK M/CYL SECD PSTN (*KIT1)				
14.		N.S.	**BODY**, BRK M/CYL (*KIT1)				

SERVICE KITS

1.	7–A7	4.650	**CYLINDER**, BRK MAS (INCL 1–14) (AC–DELCO #174–714)	93–97	F	1	18021940
	7–A7	4.650	**CYLINDER**, BRK MAS (INCL 1–14) (AC–DELCO #174–749)	98–02	F	1	18026276
	7–A7	4.650	**CYLINDER**, BRK MAS (1" CYLINDER BORE) (INCL 1–14) (AC–DELCO #18M700)	93–97	FP (WITH POWER BRAKES)	AR	18030942
2.	7–A6	4.649	**CYLINDER KIT**, BRK MAS (INCL 7–11) (AC–DELCO #175–420)	93–97	F	1	18020020
	7–A6	4.649	**CYLINDER KIT**, BRK MAS (INCL 7–11) (AC–DELCO #175–431)	98–02	F	1	18029859
3.	7–A7	4.651	**RESERVOIR**, BRK M/CYL (INCL 3–6)	98–02	F	1	18026283
	7–A7	4.651	**RESERVOIR**, BRK M/CYL (W/GROM) (INCL 3–6)	93–97	F	1	18020021

cardiagn.com

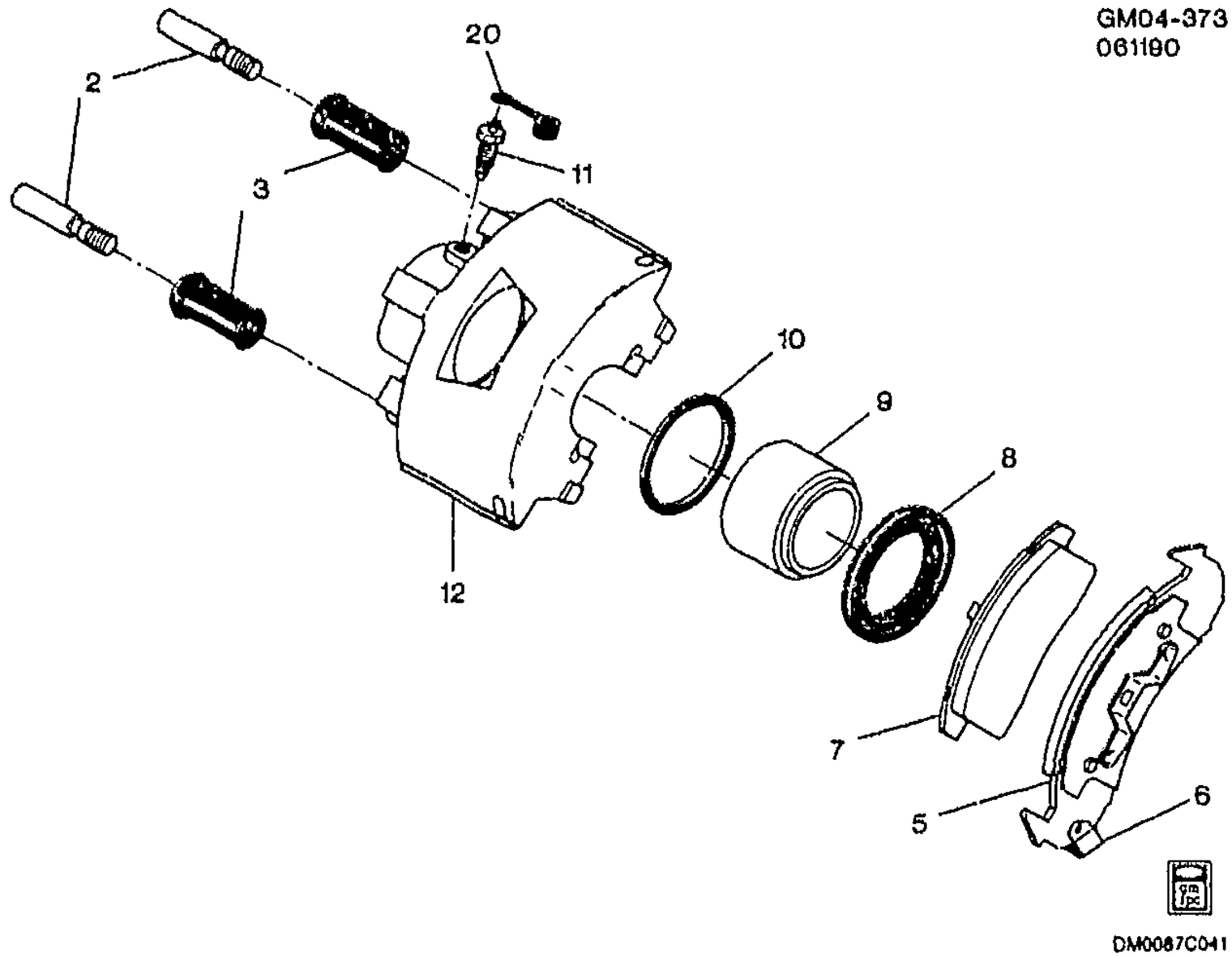

GM04–373F

1993 F BRAKE CALIPER/FRONT (GEN II 64MM)(DELCO)

2.	7–A7	4.665	**BOLT**, FRT BRK CLPR (AC–DELCO #18K123)	93	FP	AR	18034497
	7–A7	4.665	**BOLT**, FRT BRK CLPR (W/SLEEVE) (M11X1.5X57.5, 22.2 THD, 9.68 OD, GM 500M (9.8), DM–6092 COATED) (AC–DELCO #179–1306)	93	F	4	18029832
3.		N.S.	**BUSHING**, FRT BRK CLPR (*KIT1, KIT3)		.....		
5.		N.S.	**PAD**, FRT DISC BRK OTR (*KIT4)		.....		
6.		N.S.	**SENSOR**, FRT DISC BRK PAD WEAR (*KIT4)		.....		
7.		N.S.	**PAD**, FRT DISC BRK INR (*KIT4) .		.....		
8.		N.S.	**BOOT**, FRT BRK CLPR PSTN (*KIT1, KIT2)		.....		
9.	7–A10	4.668	**PISTON**, FRT BRK CLPR (*KIT1) (AC–DELCO #179–1178)	93	F	2	18060147
10.		N.S.	**SEAL**, FRT BRK CLPR PSTN (*KIT1, KIT2)		.....		
11.	7–A10	4.666	**VALVE**, FRT BRK CLPR BLEDR (MERCHANDISING QTY 10 EACH) (*KIT1) (AC–DELCO #179–1161) (M10X1.5)	93	F	2	18029884

cardiagn.com

12.		N.S.	HOUSING, FRT BRK CLPR (*KIT1)				
20.		N.S.	COVER, FRT BRK BLEDR SCREW (*KIT1)				

SERVICE KITS

1.	7–A7	4.665	CALIPER, FRT BRK (INCL 3, 8–12, 20) (AC–DELCO #172–1507)	93	F	LH	18018731
	7–A7	4.665	CALIPER, FRT BRK (INCL 3, 8–12, 20) (AC–DELCO #172–1506)	93	F	RH	18060165
2.	7–A10	4.667	CALIPER KIT, FRT BRK (INCL 8, 10) (REPAIR) (CONSISTS OF SEAL & BOOT) (AC–DELCO #173–273)	93	F	2	18017156
	7–A10	4.667	CALIPER KIT, FRT BRK (2 1/2 CYLINDER BORE) (INCL 8, 10) (AC–DELCO #18H21)	93	FP	AR	18031495
3.	7–A7	4.665	BUSHING KIT, FRT BRK CLPR GDE PIN (INCL 3 (QTY 4), & SILICONE GREASE) (AC–DELCO #179–1179)	93	F	1	18017632
4.	7–B14	5.017	PAD KIT, FRT DISC BRK (INCL 5–7) (AC–DELCO #17D505MX)	93	F	AR	18038489
	7–B14	5.017	PAD KIT, FRT DISC BRK (GM PARTS) (INCL 5–7) (AC–DELCO #171–541)	93	F	1	18024917

cardiagn.com

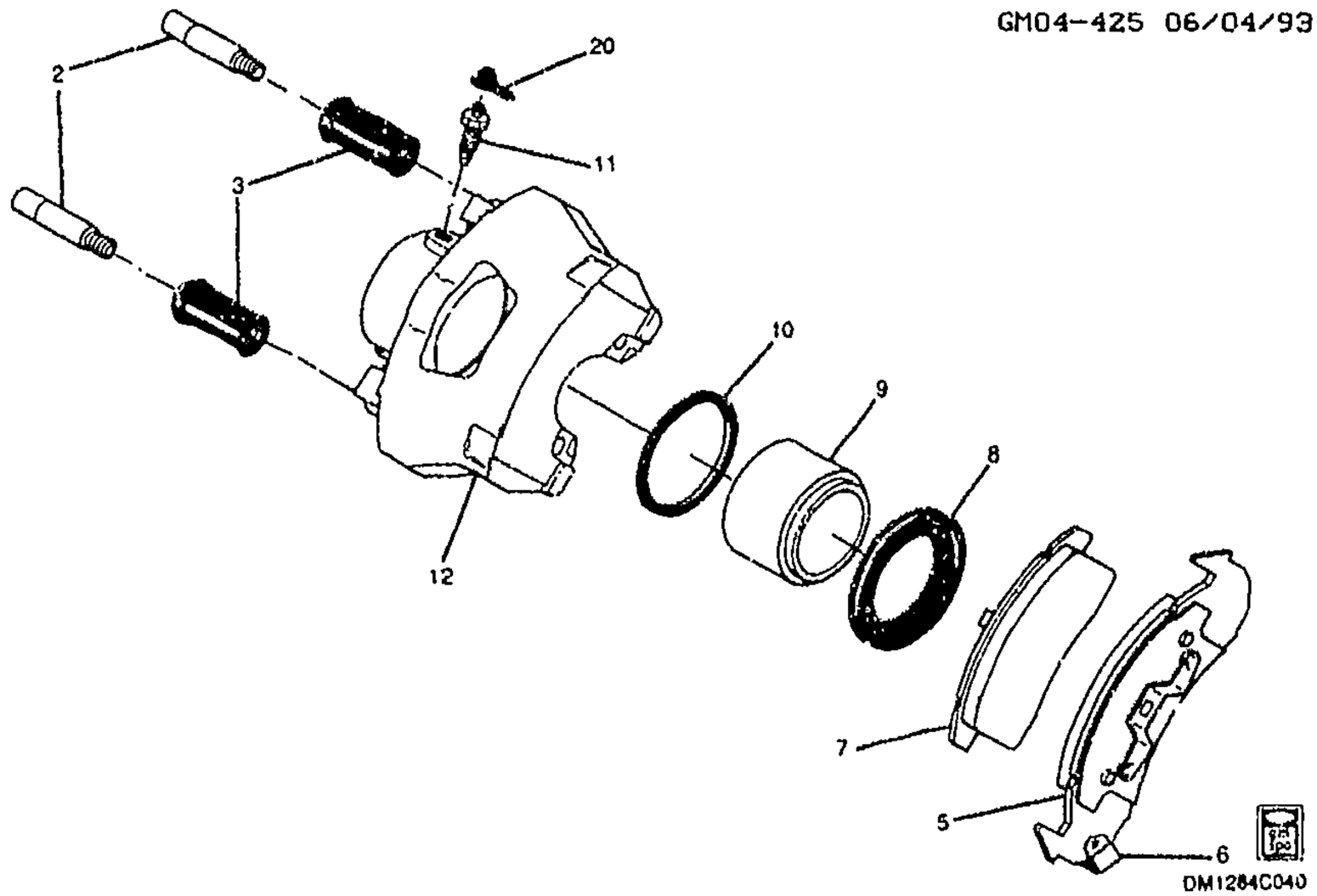

GM04-425

1994-1997 F BRAKE CALIPER/FRONT

2.	7-A7	4.665	**BOLT**, FRT BRK CLPR (W/SLEEVE) (AC-DELCO #18K123)	94-97	FP	AR	18034497
	7-A7	4.665	**BOLT**, FRT BRK CLPR (W/SLEEVE) (W/SLEEVE) (M11X1.5X57.5, 22.2 THD, 9.68 OD, GM 500M (9.8), DM-6092 COATED) (AC-DELCO #179-1306)	94-97	F	4	18029832
3.	7-A7	4.665	**BUSHING KIT**, FRT BRK CLPR GDE PIN (*KIT1) (AC-DELCO #179-1179)	94-97	F	1	18017632
5.		N.S.	**SHOE & LINING**, OUTBOARD (*KIT3)				
6.		N.S.	**SENSOR**, WEAR (*KIT3)				
7.		N.S.	**SHOE & LINING**, INBOARD (*KIT3)				
8.		N.S.	**BOOT** (*KIT1, KIT2)				
9.	7-A10	4.668	**PISTON**, FRT BRK CLPR (*KIT1) (AC-DELCO #179-1178)	94-97	F	2	18060147
10.		N.S.	**SEAL**, PISTON (*KIT1, KIT2)				
11.	7-A10	4.666	**VALVE**, FRT BRK CLPR BLEDR (MERCHANDISING QTY 10 EACH) (*KIT1) (AC-DELCO #179-1161) (M10X1.5)	94-97	F	2	18029884

cardiagn.com

12.		N.S.	HOUSING, CALIPER (*KIT1)		.....		
20.	7-A10	4.666	COVER, FRT BRK BLEDR SCREW (M10X1.5 THD) (EXC EMERGENCY REPAIR USAGE) (*KIT1) (4.665)	94-97	F	2	18009891

SERVICE KITS

1.	7-A7	4.665	CALIPER, FRT BRK (INCLS 3, 8, 9, 10, 11, 12, 20) (AC-DELCO #172-1542)	94	F	RH	18029937
	7-A7	4.665	CALIPER, FRT BRK (INCLS 3, 8, 9, 10, 11, 12, 20) (AC-DELCO #172-1543)	94-97	F	LH	18029938
	7-A7	4.665	CALIPER, FRT BRK (INCLS 3, 8, 9, 10, 11, 12, 20) (AC-DELCO #172-1544)	95-97	F	RH	18029928
2.	7-A10	4.667	CALIPER KIT, FRT BRK ((REPAIR) INCLS 8, 10) (REPAIR) (CONSISTS OF SEAL & BOOT) (AC-DELCO #173-273)	94-97	F	2	18017156
	7-A10	4.667	CALIPER KIT, FRT BRK (2 1/2 CYLINDER BORE) ((REPAIR) INCLS 8, 10) (AC-DELCO #18H21)	94-97	FP	AR	18031495
3.	7-B14	5.017	PAD KIT, FRT DISC BRK (INCLS 5, 6, 7) (AC-DELCO #171-579) .	94-97	F	1	18024933
	7-B14	5.017	PAD KIT, FRT DISC BRK (INCLS 5, 6, 7) (AC-DELCO #17D623MX)	94-97	FP	AR	18038490
	7-B14	5.017	PAD KIT, FRT DISC BRK (INCLS 5, 6, 7) (AC-DELCO #17D623MX)	94-97	FP (RDB)	AR	18038490
	7-B14	5.017	PAD KIT, FRT DISC BRK (REAR DRUM BRAKES) (INCLS 5, 6, 7) (AC-DELCO #17D623MX)	94-97	FP	AR	18038490

RPO DEFINITIONS
RDB – ACDELCO, REAR DISC BRAKES

cardiagn.com

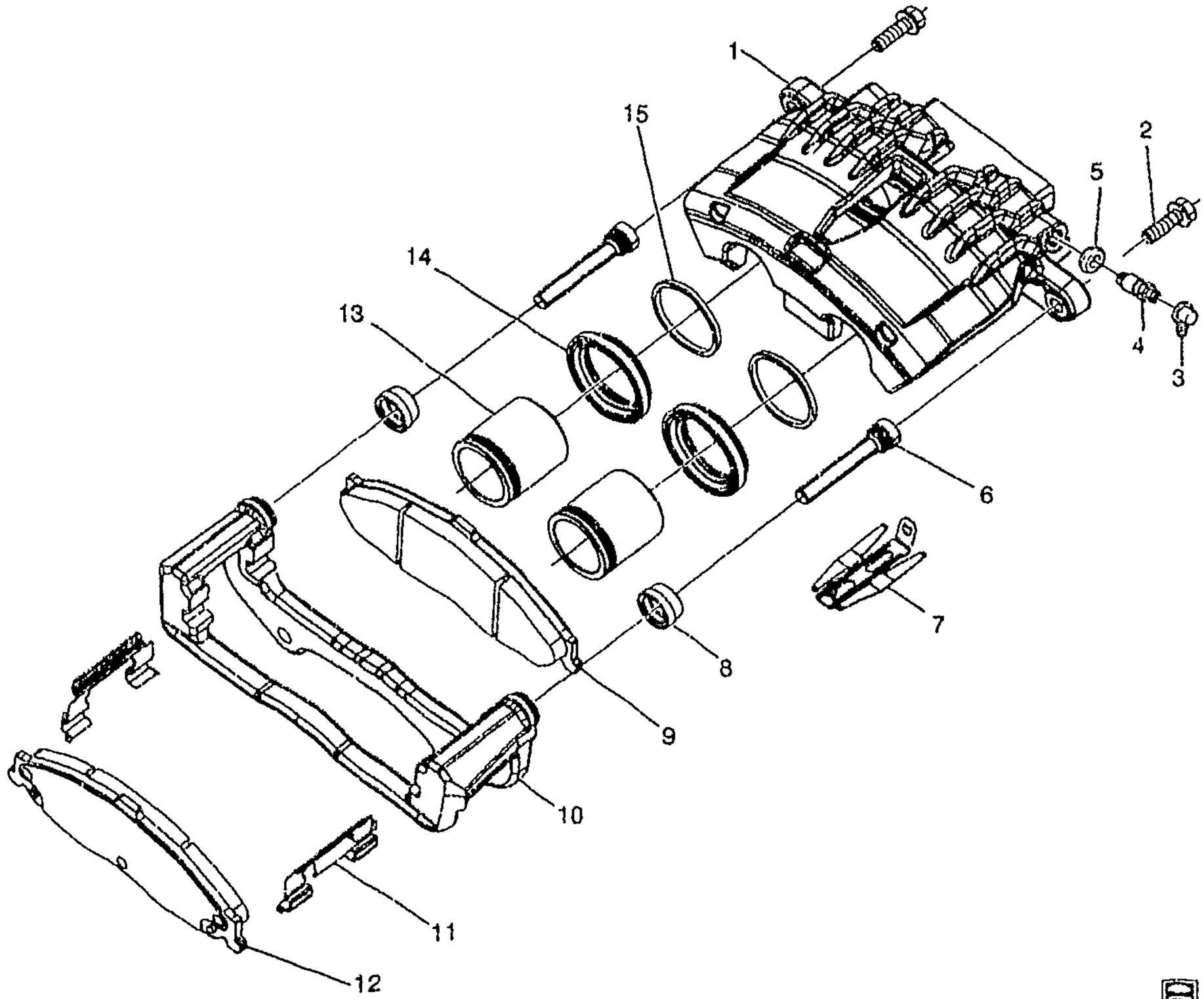

GM04-523

1998-2002 F BRAKE CALIPER/FRONT

1.		N.S.	HOUSING, FRT BRK CLPR (*KIT1)				
2.	7-A7	4.665	BOLT, FRT BRK CLPR GDE PIN (PART OF 10) (M8X1.25) (DELPHI) (STMPD WITH X) (*KIT1, KIT2, KIT3) (AC-DELCO #179-1325)	98-02	F	4	18026153
3.		N.S.	CAP, FRT BRK CLPR BLEDR VLV (*KIT1)				
4.	7-A10	4.666	VALVE, FRT BRK CLPR BLEDR (DELPHI, STAMPED WITH X) (*KIT1)	98-02	F (J65)	2	18029799
5.		N.S.	SEAL, FRT BRK CLPR BLEDR VLV				
6.	7-A7	4.665	PIN, FRT BRK CLPR GDE (AC-DELCO #179-1327)	98-02	F (J65)	4	18026161

cardiagn.com

7.	7-B16	5.043	**SPRING**, FRT BRK SHOE A/RTL (INCLS 2 SPRINGS) (*KIT3) (AC-DELCO #179-1329)	98-02	F (J65)	2	18026181
8.	7-A7	4.665	**SEAL**, FRT BRK CLPR GDE PIN (DELPHI, STAMPED WITH X) (4.670) (AC-DELCO #179-1323)	98-02	F (J65)	4	18026151
9.		N.S.	**PAD**, FRT DISC BRK INR (*KIT3)				
10.	7-A7	4.665	**BRACKET**, FRT BRK CLPR (INCLS 2, 11)	98-01	F (J65)	2	18026163
	7-A7	4.665	**BRACKET**, FRT BRK CLPR (INCLS 2, 11)	02	F (J65) (EXC Z4C)	2	18026163
	7-A7	4.665	**BRACKET**, FRT BRK CLPR (INCLS 2, 11)	02	F (J65, Z4C)	2	18046301
11.	7-A7	4.665	**SHIM**, FRT BRK PAD (ANTI-NOISE) (PART OF 10) (INCLS 4 SHIMS) (*KIT3)	98-02	F (J65)	2	18026164
12.		N.S.	**PAD**, FRT DISC BRK OTR (*KIT3)				
13.	7-A10	4.668	**PISTON**, FRT BRK CLPR (*KIT1) (AC-DELCO #179-1328)	98-02	F (J65)	4	18026162
14.		N.S.	**BOOT**, FRT BRK CLPR PSTN (*KIT1, KIT2)				
15.		N.S.	**SEAL**, FRT BRK CLPR PSTN (*KIT1, KIT2)				

SERVICE KITS

1.	7-A7	4.665	**CALIPER**, FRT BRK (INCLS 1-4, 13-15) (AC-DELCO #172-1603)	98-02	F (J65)	LH	18042491
	7-A7	4.665	**CALIPER**, FRT BRK (INCLS 1-4, 13-15) (AC-DELCO #172-1604)	98-02	F (J65)	RH	18042492
	7-A7	4.665	**CALIPER**, FRT BRK (INCLS 1-4, 13-15) (AC-DELCO #172-1603)	02	F (J65) (EXC Z4C)	LH	18042491
	7-A7	4.665	**CALIPER**, FRT BRK (INCLS 1-4, 13-15) (AC-DELCO #172-1604)	02	F (J65) (EXC Z4C)	RH	18042492
	7-A7	4.665	**CALIPER**, FRT BRK (INCLS 1-4, 13-15) (AC-DELCO #172-1630)	02	F (J65, Z4C)	LH	18046299
	7-A7	4.665	**CALIPER**, FRT BRK (INCLS 1-4, 13-15) (AC-DELCO #172-1631)	02	F (J65, Z4C)	RH	18046300
2.	7-A10	4.667	**CALIPER KIT**, FRT BRK (INCLS 2, 14, 15) (INCLS SEALING RING, PSTN BOOT, GUIDE PIN BOLT) (4.665) (AC-DELCO #173-294)	98-02	F (J65)	4	18026160
3.	7-B14	5.017	**PAD KIT**, FRT DISC BRK (INCLS 2, 7, 9, 11, 12) (AC-DELCO #171-607)	98	F (J65)	1	18026165
	7-B14	5.017	**PAD KIT**, FRT DISC BRK (INCLS 2, 7, 9, 11, 12) (AC-DELCO #17D749M)	98-00	F	1	18038574
	7-B14	5.017	**PAD KIT**, FRT DISC BRK (INCLS 2, 7, 9, 11, 12) (AC-DELCO #171-631)	99-02	F (J65)	1	18026298

cardiagn.com

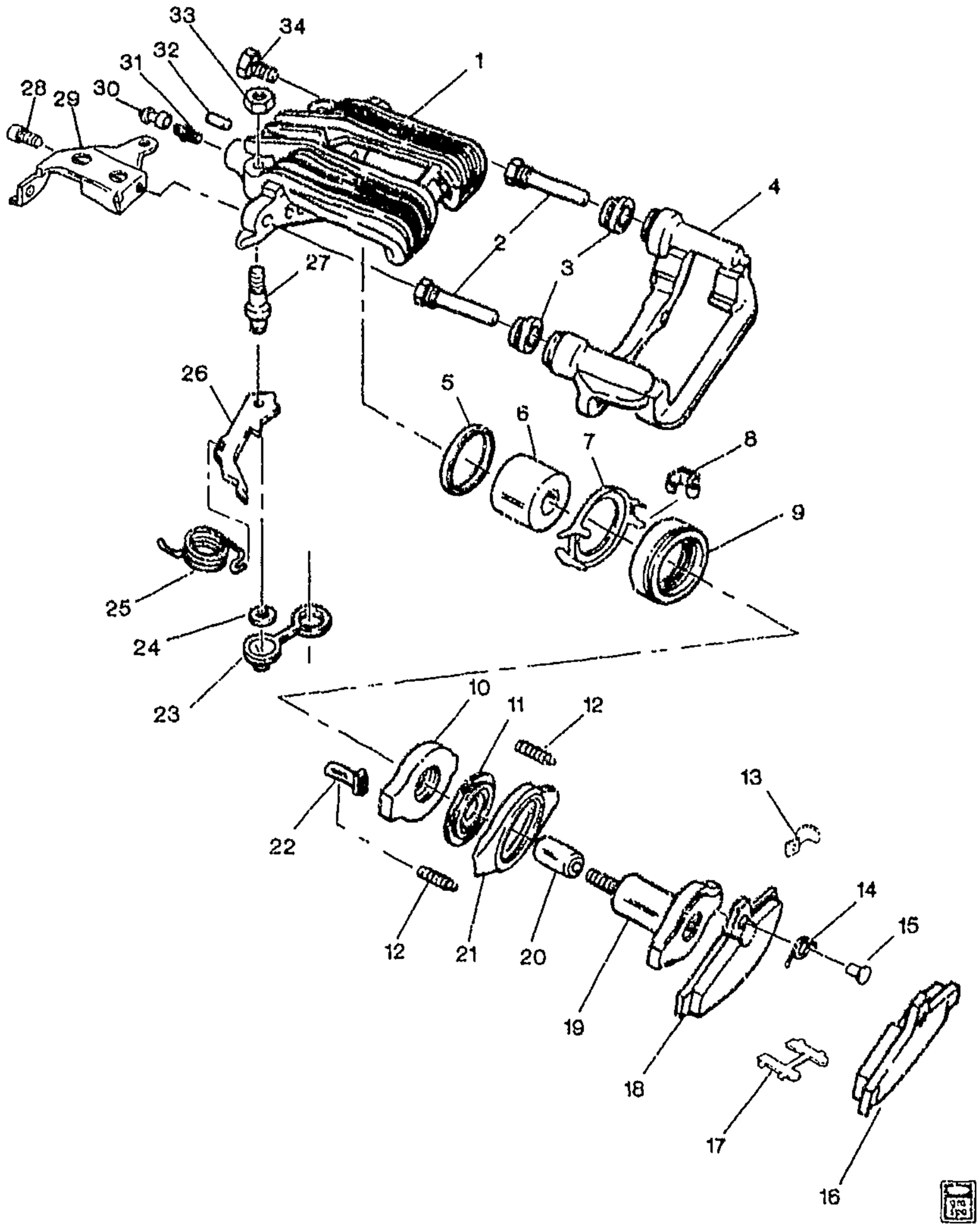

MF04-028

1993-1997 F BRAKE CALIPER/REAR (J65)

1.	7-A7	4.665	CALIPER, RR BRK (AC-DELCO #172-2109)	93-97	F (J65)	LH	18021198
	7-A7	4.665	CALIPER, RR BRK (AC-DELCO #172-2110)	93-97	F (J65)	RH	18021199
2.	7-A7	4.665	PIN, RR BRK CLPR GDE	93-97	F (J65)	4	18022147

cardiagn.com

							MF04-028
3.	7-A7	4.665	BOOT, RR BRK CLPR GDE PIN (*KIT3)	93-97	F (J65)	4	14067552
4.	7-A7	4.665	BRACKET, RR BRK CLPR	93-97	F (J65)	2	18020432
5.		DISCON	SEAL, RR BRK CLPR PSTN (*KIT3)				14067562
6.	7-A10	4.668	PISTON, RR BRK CLPR (AC-DELCO #179-987)	93-97	F (J65)	2	10112643
7.		N.S.	RETAINER (*KIT1, KIT3)				
8.		N.S.	SPRING, PRELOAD (*KIT1, KIT3)				
9.		N.S.	BOOT, RR BRK CLPR PSTN (*KIT1, KIT3)				
10.		N.S.	ACTUATING COLLAR (*KIT1)				
11.		N.S.	BOOT (*KIT1, KIT3)				
12.	7-A7	4.665	SPRING, RR CLPR PARK BRK COLR RTN	93-97	F (J65)	4	10112650
13.		N.S.	SENSOR, WEAR INDICATOR (*KIT2)				
14.		N.S.	SPRING, SHOE RETAINING (*KIT2)				
15.		N.S.	PIN, SPRING RETAINER (*KIT2)				
16.		N.S.	PAD, RR DISC BRK OTR (*KIT2)				
17.		N.S.	INSULATOR, RR DISC BRK PAD (*KIT2)				
18.		N.S.	PAD, RR DISC BRK INR (*KIT2)				
19.		N.S.	CLAMP ROD (*KIT1)				
20.		N.S.	BUSHING (*KIT1, KIT3)				
21.		N.S.	RETAINER (*KIT1, KIT3)				
22.		N.S.	PUSHROD (*KIT1)				
23.	7-B18	5.158	CAP, RR PARK BRK ACTR LVR PIV PIN (*KIT3) (4.665)	93-97	F (J65)	2	10112647
24.	7-B18	5.158	RING, RR PARK BRK ACTR LVR RET (*KIT3) (4.665)	93-97	F (J65)	2	10112646
25.	7-B18	5.151	SPRING, RR PARK BRK LVR RTN	93-97	F (J65)	2	18020429
26.	7-B17	5.149	LEVER, RR PARK BRK ACTR	93-97	F (J65)	2	18020435
27.	7-B18	5.158	PIN, RR PARK BRK LVR PIV (AC-DELCO #179-980)	93-97	F (J65)	2	18020428
28.	7-A7	4.665	BOLT, RR BRK CLPR (*KIT3)	93-97	F	2	10112649
29.	7-A18	4.785	BRACKET, PARK BRK CBL	93-97	F (J65)	LH	18021200
	7-A18	4.785	BRACKET, PARK BRK CBL	93-97	F (J65)	RH	18021201
30.	7-A10	4.666	CAP, RR BRK BLEDR VLV (REPCO LTD) (STMPD WITH A DOT OF ORANGE PAINT) (*KIT3)	93-97	F (J65)	2	14089150
31.	7-A10	4.666	VALVE, RR BRK BLEDR	93-97	F (J65)	2	14071826
32.	7-A7	4.665	BOLT, RR PARK BRK ACTR LVR ADJ	93-97	F (J65)	2	10112648
33.		8.915	NUT (RR PARK BRK ACTR LVR PIV PIN) (0.334) (AC-DELCO #12337995)	93-97	F	AR	12337995
34.	7-A7	4.665	BOLT, RR BRK CLPR (GDE PIN) (*KIT2, KIT3)	93-97	F	4	14067559

cardiagn.com

SERVICE KITS

1.	7–A5	4.591	ACTUATOR KIT, RR PARK BRK (INCLS 7–11, 19–22, 26) (RPR) (4.665)	93–97	F (J65)	2	18021202
2.	7–B14	5.017	PAD KIT, RR DISC BRK (INCLS 13–18, 34) (AC–DELCO #171–732)	93–97	F	1	18021875
	7–B14	5.017	PAD KIT, RR DISC BRK (INCLS 13–18, 34) (AC–DELCO #17D413M) (VEHICLES ORIGINALLY EQUIPPED WITH SEMI–METALLIC DISC BRAKE PADS)	93–97	FP	AR	18028996
3.	7–A7	4.665	BRAKE KIT, RR CLPR PARK RPR (INCL 3, 5, 7, 8, 9, 11, 20, 21, 23, 24, 28, 30, 34) (AC–DELCO #173–512)	93–97	F (J65)	2	10112655

RPO DEFINITIONS
J65 – BRAKE SYSTEM,POWER,FRONT AND REAR DISC

cardiagn.com

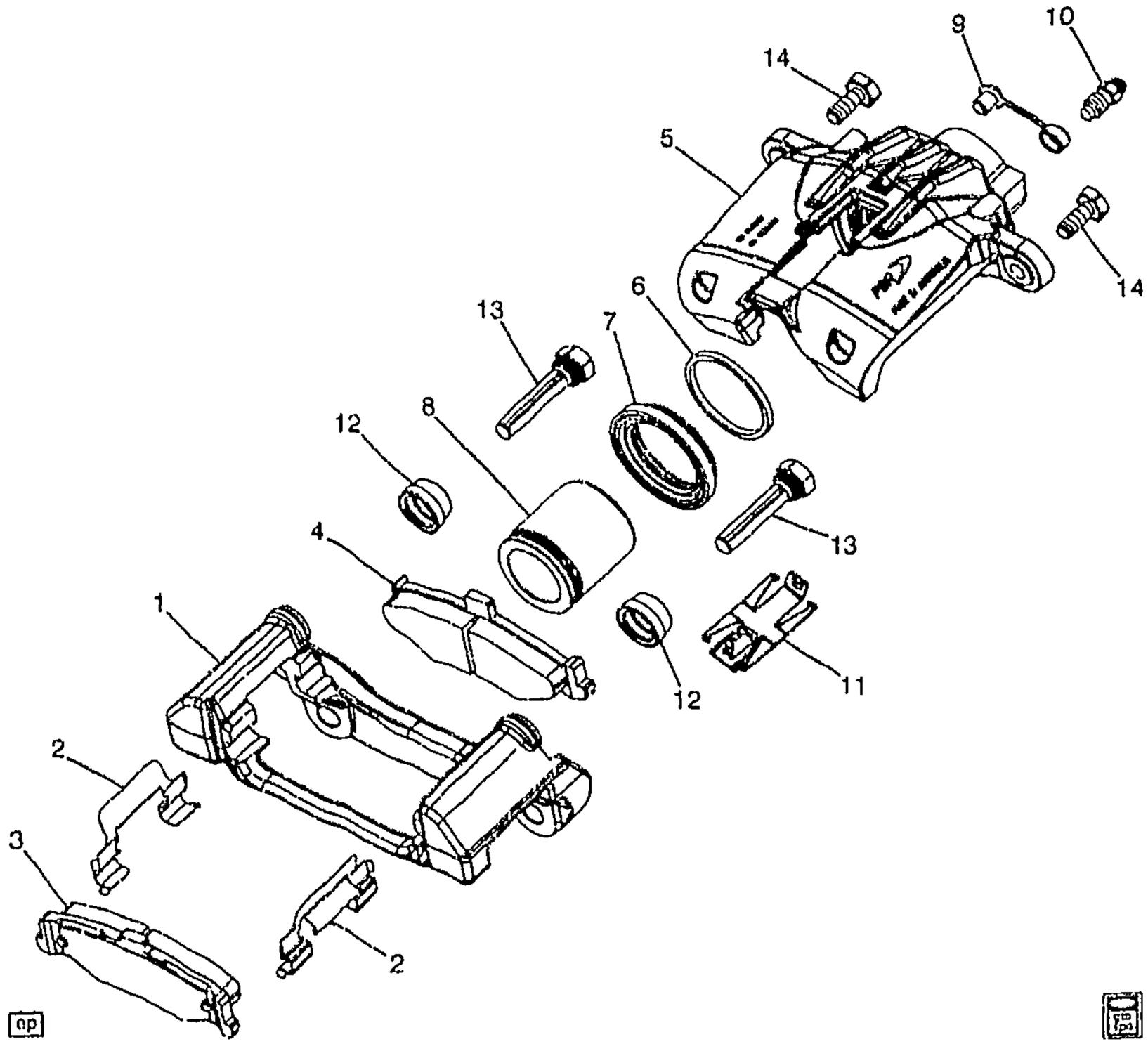

MF04-037

1998-2002 F BRAKE CALIPER/REAR (J65)

1.	7-A7	4.665	BRACKET, RR BRK CLPR (ON CALIPER)	98-02	F (J65)	2	12456459
2.		N.S.	SHIM, RR DISC BRK PAD (*KIT1)				
3.		N.S.	PAD, RR DISC BRK OTR (*KIT1)				
4.		N.S.	PAD, RR DISC BRK INR (*KIT1)				
5.		N.S.	HOUSING, RR BRK CLPR (*KIT2)				
6.	7-A10	4.667	SEAL, RR BRK CLPR PSTN (*KIT2, KIT3)	98-02	F (J65)	2	12530709
7.	7-A11	4.670	BOOT, RR BRK CLPR PSTN (*KIT2, KIT3)	98-02	F (J65)	2	12530707
8.	7-A10	4.668	PISTON, RR BRK CLPR (*KIT2) (AC-DELCO #179-2010)	98-02	F (J65)	2	12453509
9.		N.S.	CAP, RR BRK BLEDR VLV (*KIT2)				
10.	7-A10	4.666	VALVE, RR BRK BLEDR (*KIT2)	98-02	F (J65)	2	14071826
11.		N.S.	SPRING, ANTI-RATTLE (*KIT1, KIT2)				

cardiagn.com

12.	7-A7	4.665	BOOT, RR BRK CLPR GDE PIN (REPCO LTD) (STMPD WITH A DOT OF ORANGE PAINT) (*KIT3) (AC-DELCO #179-2008)	98-02	F (J65)	4	12530703
13.	7-A7	4.665	PIN, RR BRK CLPR GDE (AC-DELCO #179-1327)	98-02	F (J65)	4	18026161
14.	7-A7	4.665	BOLT, RR BRK CLPR (*KIT1, KIT2, KIT3)	98-02	F	4	14067559

SERVICE KITS

1.	7-B14	5.017	PAD KIT, RR DISC BRK (INCLS 2-4, 11, 14) (AC-DELCO #171-804)	98-99	F (J65)	1	12454972
	7-B14	5.017	PAD KIT, RR DISC BRK (INCLS 2-4, 11, 14) (AC-DELCO #17D750M)	98-00	F	1	18039835
	7-B14	5.017	PAD KIT, RR DISC BRK (NO COMPARABLE 2ND DESIGN FOR DURASTOP) (INCLS 2-4, 11, 14) (AC-DELCO #17D750) (USE FOR VEHICLES BUILT PRIOR TO VIN #2G1FP22K6Y2100381)	00	F (J65) (1ST DES)	1	18038575
	7-B14	5.017	PAD KIT, RR DISC BRK (RH & LH PART INCLUDED) (INCLS 2-4, 11, 14) (AC-DELCO #171-804)	01-02	F (J65)	1	12454972
	7-B14	5.017	PAD KIT, RR DISC BRK (RH & LH PARTS INCLUDED) (NO COMPARABLE 1ST DESIGN) (INCLS 2-4, 11, 14) (AC-DELCO #171-804) (USE FOR VEHICLES W/VIN #2G1FP22K6Y2100381 AND LATER)	00	F (J65) (2ND DES)	1	12454972
2.	7-A10	4.667	CALIPER KIT, RR BRK (INCLS 5-11, 14) (4.665)	98-02	F (J65)	LH	12455127
	7-A10	4.667	CALIPER KIT, RR BRK (INCLS 5-11, 14) (4.665)	98-02	F (J65)	RH	12455128
3.	7-A10	4.667	REPAIR KIT, RR BRK CLPR HYD (INCLS 6, 7, 12, 14)	98-02	F	2	12530687

RPO DEFINITIONS
J65 – BRAKE SYSTEM,POWER,FRONT AND REAR DISC

cardiagn.com

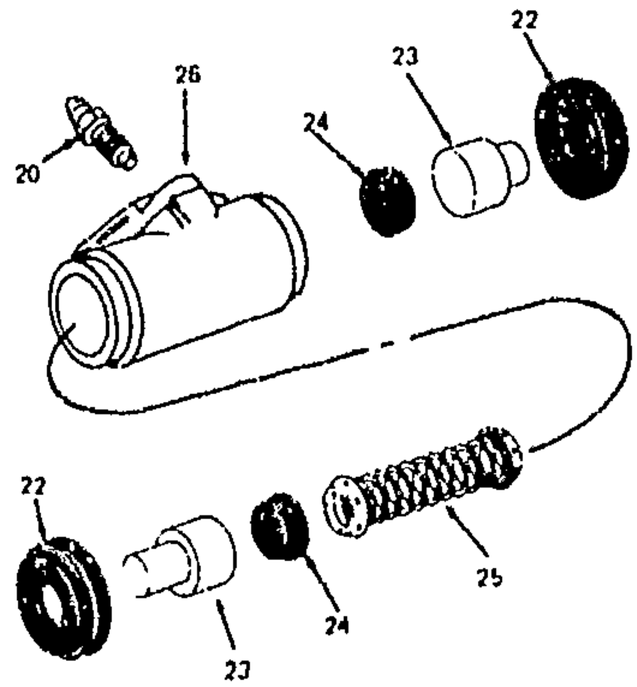

DM 6225A305

GM04-275F

1993-1997 F WHEEL CYLINDER/DRUM BRAKE (DELCO)(J41)

20.	7-A10	4.666	VALVE, RR BRK BLEDR (*KIT1) (AC-DELCO #179-1098)	93-95	F (J41)	2	18060081
	7-A10	4.666	VALVE, RR BRK BLEDR (*KIT1) (AC-DELCO #179-1098)	96-97	F (L36, GU4, GU5, GU6, J41) (EXC G80, NW9)	2	18060081
22.		N.S.	BOOT, RR BRK CYL PSTN (*KIT1, KIT2)		.....		
23.		N.S.	PISTON, RR BRK CYL (*KIT1) ...		.....		
24.		N.S.	SEAL, RR BRK CYL PSTN (*KIT1, KIT2)		.....		
25.		N.S.	SPRING, RR BRK CYL PSTN (*KIT1, KIT2)		.....		
23.		N.S.	BODY, RR BRK CYL (*KIT1)		.....		

SERVICE KITS

1.	7-A7	4.665	CYLINDER, RR BRK (INCLS 20-26) (AC-DELCO #172-1520)	93-95	F (J41)	2	18060174
	7-A7	4.665	CYLINDER, RR BRK (INCLS 20-26) (AC-DELCO #18E383) .	93-97	FP	LH	18029563
	7-A7	4.665	CYLINDER, RR BRK (INCLS 20-26) (AC-DELCO #172-1520)	96-97	F (L36, GU4, GU5, GU6, J41) (EXC G80, NW9)	2	18060174
2.	7-A10	4.667	CYLINDER KIT, RR BRK (INCLS 20, 22, 24, 25, 26) (AC-DELCO #173-282)	93-97	F (J41)	2	18020127
	7-A10	4.667	CYLINDER KIT, RR BRK (13/16 CYLINDER BORE) (INCLS 20, 22, 24, 25, 26) (AC-DELCO #18G179)	93-97	FP	AR	18031358

RPO DEFINITIONS
GU4 - AXLE,REAR,3.08 RATIO

cardiagn.com

GU6 – AXLE,REAR,3.42 RATIO
G80 – AXLE,REAR,POSITRACTION,LIMITED SLIP
J41 – BRAKE SYSTEM,POWER,FRONT DISC,REAR DRUM(CAST IRON)
L36 – ENGINE GAS, 6 CYL, 3.8K, MFI, V6, HO (ERV6 SERIES)
NW9 – TRACTION CONTROL ELECTRONIC

cardiagn.com

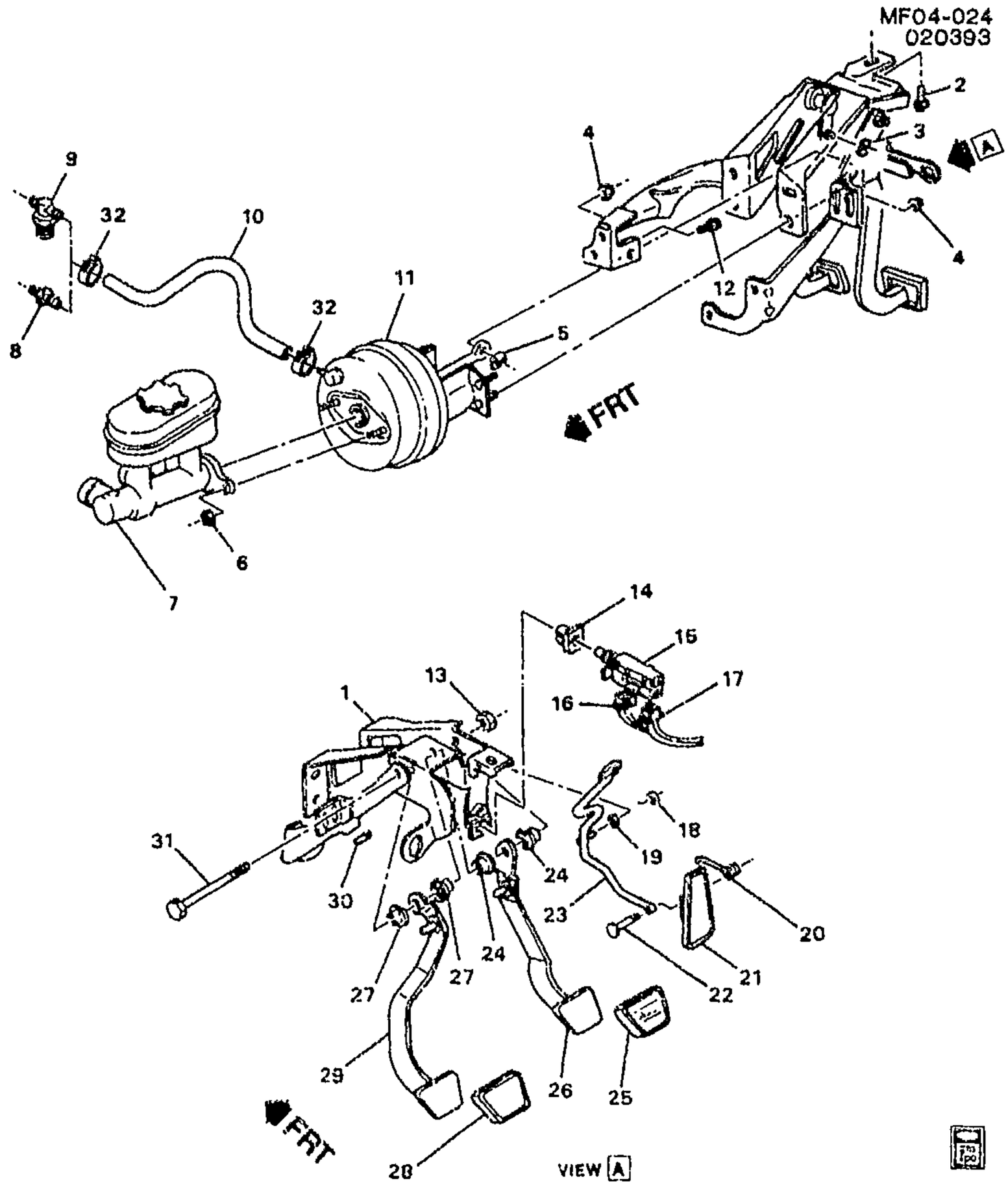

MF04-024

1993--2002 F BRAKE PEDAL & MASTER CYLINDER MOUNTING

1.	7-A5	4.625	PEDAL, BRK & ACCEL & CLU (W/BRKT) (INCLS 13, 18-31)	93	F (M28)	1	10400399
	7-A5	4.625	PEDAL, BRK & ACCEL & CLU (W/BRKT) (INCLS 13, 18-31) . ..	93	F (M29)	1	10400399
	7-A5	4.625	PEDAL, BRK & ACCEL & CLU (W/BRKT) (INCLS 13, 18-31)	93-97	F (M49)	1	10400399
	7-A5	4.625	PEDAL, BRK & ACCEL & CLU (W/BRKT) (INCLS 13, 18-31)	94-97	F (MM6)	1	10400399

cardiagn.com

	7-A5	4.625	PEDAL, BRK & ACCEL & CLU (W/BRKT) (INCLS 13, 18-31) (INCLUDES PAD, ARM, PEDAL, SPRING, PIN, NUT, BUSHING, RETAINER)	98	F (MM6)	1	10400451
	7-A5	4.625	PEDAL, BRK & ACCEL & CLU (W/BRKT) (INCLS 13, 18-31) (INCLUDES PAD, ARM, PEDAL, SPRING, PIN, NUT, BUSHING, RETAINER)	98	F (M49)	1	10400451
	7-A5	4.625	PEDAL, BRK & ACCEL & CLU (W/BRKT) (INCLS 13, 18-31) (INCLUDES PAD, ARM, PEDAL, SPRING, PIN, NUT, BUSHING, RETAINER)	99-02	F (LS1, MM6)	1	10400451
	7-A5	4.625	PEDAL, BRK & ACCEL (W/BRKT) (INCLS 13, 18-26, 31)	93	F (MD8)	1	10400442
	7-A5	4.625	PEDAL, BRK & ACCEL (W/BRKT) (INCLS 13, 18-26, 31)	94-98	F (M30)	1	10400442
	7-A5	4.625	PEDAL, BRK & ACCEL (W/BRKT) (INCLS 13, 18-26, 31)	99-02	F (LS1, M30)	1	10400442
2.		8.900	BOLT-HEX, M8X1.25X30, 22 THD, 24MM OD, 9.8, 7114M (BRK PED BRKT)	93-02		1	11516594
3.		8.928	WASHER, SPRING 29/64X11/16X5/64 (15/16 FREE HEIGHT) PLAIN (BRK PED PUSH ROD)	93-02		1	410230
4.		8.917	NUT, M8X1.25X7.1, ZC 10 (BRK PED)	93-02		5	11515748
		8.929	WASHER, M8X24X2.3 (BRK PED)	93-02		5	11500323
5.	7-A7	4.662	RETAINER, BRK PED PUSH ROD	93-02	F	1	3817880
6.	7-A7	4.662	NUT, BRK M/CYL (M10X1.5 FLANGED HEX HEAD) (8.917)	93-94	F	2	10255857
	7-A7	4.662	NUT, BRK M/CYL (NUT, HEX PRVL TORQ) (M10X1.5X11)	95-02	F	2	25664438
7.	7-A7	4.650	CYLINDER, BRK MAS (SEE "BRAKE MASTER CYLINDER" ILLUSTRATION IN GRP. 4.000 FOR DETAILED VIEW.) (AC-DELCO #174-714)	93-97	F	1	18021940
	7-A7	4.650	CYLINDER, BRK MAS (SEE "BRAKE MASTER CYLINDER" ILLUSTRATION IN GRP. 4.000 FOR DETAILED VIEW.) (AC-DELCO #174-749)	98-02	F	1	18026276
	7-A7	4.650	CYLINDER, BRK MAS (1" CYLINDER BORE) (SEE "BRAKE MASTER CYLINDER" ILLUSTRATION IN GRP. 4.000 FOR DETAILED VIEW.) (AC-DELCO #18M700)	93-97	FP (WITH POWER BRAKES)	AR	18030942
8.	7-A19	4.931	FITTING, P/B BOOS VAC TUBE	93-97	F (LT1)	1	10213160
		N.S.	FITTING, P/B BOOS VAC TUBE	98-02			
9.	7-N16	3.278	FITTING, INT MANIF VAC	93-95	F (L32)	1	10044942
		N.S.	FITTING, INT MANIF VAC	96-02			
10.	7-A19	4.931	HOSE, P/B BOOS VAC (INCLS 32)	93-95	F (L32)	1	10254498

cardiagn.com

	7-A19	4.931	HOSE, P/B BOOS VAC (INCLS 32)	93-97	F (LT1)	1	10257250
	7-A19	4.931	HOSE, P/B BOOS VAC (INCLS 32)	95-02	F (L36)	1	10251450
	7-A19	4.931	HOSE, P/B BOOS VAC (INCLS 32)	98-02	F (LS1)	1	10277331
		N.S.	HOSE, P/B BOOS VAC (INCLS 32)	96-02			
11.	7-A19	4.901	BOOSTER, P/B (SEE "BRAKE MASTER CYLINDER" ILLUSTRATION IN GRP. 4.000 FOR DETAILED VIEW.) (AC-DELCO #178-488)	93-02	F	1	18029982
	7-A18	4.805	BOOSTER, P/B (SEE "BRAKE MASTER CYLINDER" ILLUSTRATION IN GRP. 4.000 FOR DETAILED VIEW.) (4.901) (AC-DELCO #178-488)	93-02	F	1	18029982
12.		8.900	BOLT, HFH M8X1.25X18 (BRK PED BRKT)	93-02		1	11513703
13.	7-A6	4.634	NUT, BRK PED PIV (PART OF 1) (M10X1.5, GR10, CAD) (HEX) (8.917)	93-96	F	1	11501033
	7-A6	4.634	NUT, BRK PED PIV (PART OF 1) (M10X1.5) (HEX PRVL TORQ) (8.917)	97-02	F	1	11516072
14.	7-N5	2.447	RETAINER, S/LP SW (PART OF 15) (AC-DELCO #D7085)	93-02	F	1	10200424
15.	7-N18	4.115	SWITCH, S/LP & TCC (INCLS 14) (2.447) (AC-DELCO #D1567D)	93-94	F	1	10194425
	7-N5	2.447	SWITCH, S/LP & TCC (W/RET) (INCLS 14) (AC-DELCO #D1567D)	93-94	F	1	10194425
	7-N5	2.447	SWITCH, S/LP (W/O RETAINER) (AC-DELCO #D872A)	95-99	F	1	25551819
		N.S.	SWITCH, S/LP	99-02			
16.		8.965	CONNECTOR, METRI-PACK MIXED 3-WAY (W/LEADS) (BRK PRESS WRNG LP SW) (2.447) (AC-DELCO #PT487)	93-02		1	12117354
17.	7-N18	4.115	CONNECTOR, SW-S/LP & TCC (BLACK) (2-WAY F) (W/LEADS) (2.535) (AC-DELCO #PT110)	93	F (MD8)	AR	12085488
	7-N18	4.115	CONNECTOR, SW-S/LP & TCC (2-WAY F) (W/LEADS) (2.530) (AC-DELCO #PT479)	94	F	AR	12117346
	7-N18	4.115	CONNECTOR, SW-S/LP & TCC (2-WAY F) (W/LEADS) (2.530) (AC-DELCO #PT479) (USED W/STOP LP SW LABELED 10200426 (MATES W/2-WAY & 4-WAY CONN), FOR 1ST DES SEE 12117354 (PT487)	95	F (2ND DES)	AR	12117346
	7-N18	4.115	CONNECTOR, SW-S/LP & TCC (2-WAY F) (W/LEADS) (2.530) (AC-DELCO #PT479)	96-02	F	AR	12117346

cardiagn.com

	7-N18	4.115	**CONNECTOR**, SW-S/LP & TCC (USED W/STOP LP SW LABELED 10194425 (MATES W/2-WAY & 3-WAY CONN), FOR 2ND DES SEE 12117346 (PT479) (3-WAY F, W/LEADS) (2.447) (AC-DELCO #PT487)	95	F (1ST DES)	AR	12117354
		8.965	**CONNECTOR**, METRI-PACK MIXED 3-WAY (W/LEADS) (SW-S/LP & TCC) (2.447) (AC-DELCO #PT487)	93-02	F	1	12117354
18.	7-N16	3.452	**RETAINER**, ACCEL PED (PART OF 1)	93-02	F	1	10279872
19.		N.S.	**WASHER**, ACCEL PED LVR (PART OF 1)		.....		
20.		N.S.	**SPRING**, ACCEL PED (PART OF 1)		.....		
21.	7-N16	3.451	**PAD**, ACCEL PED (PART OF 1) ..	93-02	F	1	10254530
22.		N.S.	**PIN**, ACCEL PED PIV (PART OF 1)		.....		
23.	7-N16	3.451	**PEDAL**, ACCEL (PART OF 1)	93-98	F	1	10254534
	7-N16	3.451	**PEDAL**, ACCEL (PART OF 1)	99-02	F (LS1)	1	10254534
24.	7-A6	4.626	**BUSHING** BRK PED PIV (PART OF 1)	93-02	F	2	14046812
25.	7-A6	4.630	**PAD**, BRK PED (PART OF 1)	93	F (M28, M29, M49)	1	10254529
	7-A6	4.630	**PAD**, BRK PED (PART OF 1)	93	F (MD8)	1	10254537
	7-A6	4.630	**PAD**, BRK PED (PART OF 1)	94-02	F (MM6, M49)	1	10254529
	7-A6	4.630	**PAD**, BRK PED (PART OF 1)	94-02	F (M30)	1	10254537
26.	7-A5	4.625	**ARM**, BRK PED (PART OF 1)	93	F (M28, M29, M49)	1	10254531
	7-A5	4.625	**ARM**, BRK PED (PART OF 1)	94-02	F (MM6, M49)	1	10254531
27.	7-A6	4.626	**BUSHING**, BRK PED PIV (PART OF 1)	93-02	F	2	14046812
28.	7-A6	4.630	**PAD**, CLU PED (PART OF 1)	93-02	F	1	10254528
29.	7-M28	0.832	**ARM**, CLU PED (PART OF 1)	93	F (M28, M29)	1	10283466
	7-M28						
	7-M28	0.832	**ARM**, CLU PED (PART OF 1)	93-97	F (M49)	1	10283466
	7-M28						
	7-M28	0.832	**ARM**, CLU PED (PART OF 1)	94-97	F (MM6)	1	10283466
	7-M28						
	7-M28	0.832	**ARM**, CLU PED (PART OF 1)	98-02	F (MM6)	1	10401021
	7-M28						
	7-M28	0.832	**ARM**, CLU PED (PART OF 1)	98-02	F (M49)	1	10401021
	7-M28						
30.	7-M28	0.829	**BUMPER**, CLU PED (PART OF 1)	93	F (M28, M29)	1	10254536
	7-M28	0.829	**BUMPER**, CLU PED (PART OF 1)	93-97	F (M49)	1	10254536
	7-M28	0.829	**BUMPER**, CLU PED (PART OF 1)	94-97	F (MM6)	1	10254536
	7-M28	0.829	**BUMPER**, CLU PED (PART OF 1)	98-02	F (M49)	1	10254536
	7-M28	0.829	**BUMPER**, CLU PED (PART OF 1)	98-02	F (MM6)	1	10254536
31.		N.S.	**BOLT**, BRK PED PIV (PART OF 1)		....		
32.		8.948	**CLAMP**, WORM TYPE (11/16"TO 1 5/16") (P/B BOOS VAC HOSE) (PART OF 10) (AC-DELCO #1470030)	93-02	.....	2	1470030

RPO DEFINITIONS

LS1 – ENGINE GAS, 8 CYL, 5.7L, SFI, ALUMINUM ENGINE
LT1 – ENGINE-GAS, 8 CYL, 5.7L(5.7P),MFI,HO
L32 – ENGINE,3.4L,V6,(3.4S),SFI,OHV

cardiagn.com

L36 – ENGINE GAS, 6 CYL, 3.8K, MFI, V6, HO (ERV6 SERIES)
MD8 – TRANSMISSION,AUTOMATIC 4–SPEED(THM700R4/4L60)
MM6 – TRANSMISSION MAN 6 SPD, BORG WARNER, 85MM, 1ST 2.66, 6TH 0.50, O/D
M28 – TRANSMISSION MAN, 6 SPD, BORG WARNER, 85MM, 3.36 1ST, 1.35 3RD
M29 – TRANSMISSION MAN, 6 SPD, BORG WARNER, 85MM, 2.97 1ST, 1.44 3RD
M30 – TRANSMISSION,AUTOMATIC 4 SPEED,4L60E,ELECTRONIC
M49 – TRANSMISSION MAN 5 SPD, BORG WARNER, 77MM, 3.75 1ST, .76 5TH, O/D

cardiagn.com

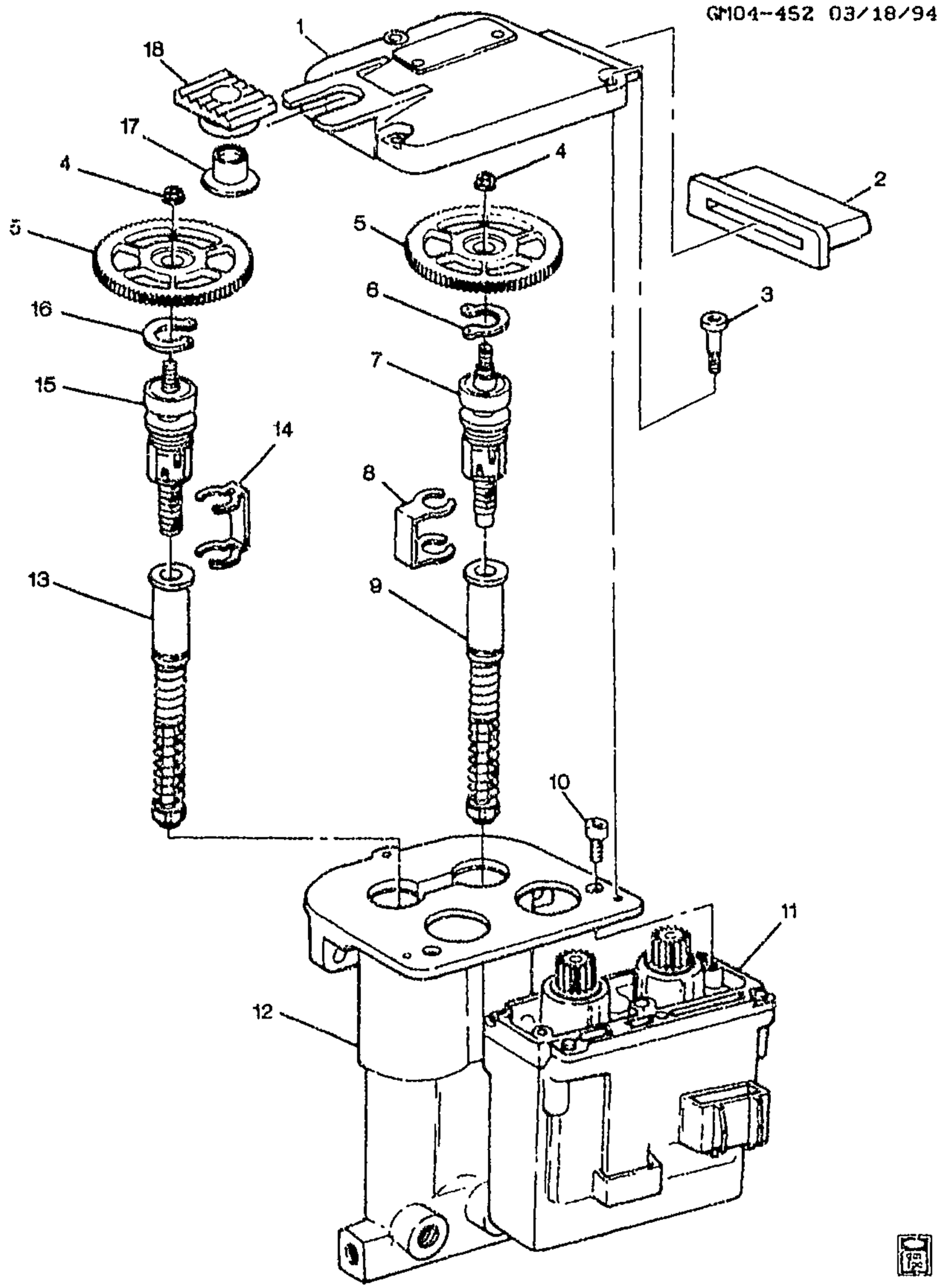

GM04-452

1995-1997 F TRACTION CONTROL MODULATOR VALVE (NW9)

1.	N.S.	COVER--ELEK BRK CONTROL (*KIT5)	.....
2.	N.S.	PAD-ELEK BRAKE CONTROL COVER (*KIT1, KIT4)	.....

cardiagn.com

3.		N.S.	SCREW–ELEK BRK CONTROL COVER (*KIT1, KIT5)				
4.		N.S.	NUT–VALVE KIT (*KIT1, KIT2)				
5.		N.S.	GEAR–VALVE KIT (*KIT1, KIT2)				
6.		N.S.	INTERNAL RETAINER (*KIT1)				
7.		N.S.	BALL SCREW ASM–LONG (*KIT1)				
8.		N.S.	RETAINER (*KIT1)				
9.		N.S.	PISTON AND POPPET ASM (*KIT1)				
10.		N.S.	SCREW–TRACTION CONTROL BODY (*KIT3)				
11.		N.S.	MOTOR PACK ASM (*KIT3)				
12.		N.S.	TRACTION CONT BODY ASM (*KIT1)				
13.		N.S.	PISTON AND POPPET ASM (*KIT1)				
14.		N.S.	RETAINER (*KIT1)				
15.		N.S.	BALL SCREW ASM–SHORT (*KIT1)				
16.		N.S.	INTERNAL RETAINER (*KIT1)				
17.		N.S.	SLEEVE–GROMMET (*KIT1, KIT4)				
18.		N.S.	GROMMET–ELEK BRAKE CONTROL COVER (*KIT1, KIT4)				

SERVICE KITS

1.	7–A17	4.730	VALVE KIT, ELEK TRACT CONT BRK PRESS MOD (INCLS 2–9, 12–18) (AC–DELCO #18029836)	95–97	F (NW9)	1	18029836
2.	7–A17	4.730	GEAR KIT, ELEK TRACT CONT BRK PRESS MOD VLV (INCLS 4, 5) (WITH NUT) (AC–DELCO #18021106)	95–97	F (NW9)	2	18021106
	7–A17	4.730	GEAR KIT, ELEK TRACT CONT BRK PRESS MOD VLV (W/NUT) (INCLS 4, 5) (WITH NUT) (AC–DELCO #18021106)	95–97	F	3	18021106
3.	7–A17	4.730	MOTOR KIT, ELEK TRACT CONT BRK PRESS MOD VLV (INCLS 10, 11) (AC–DELCO #18024455)	95–97	F (NW9)	1	18024455
4.	7–A17	4.730	GROMMET KIT, ELEK TRACT CONT BRK PRESS MOD VLV (INCLS 2, 17, 18)	95–97	F (NW9)	1	18021109
5.	7–A15	4.720	COVER, ELEK BRK CONT MDL (INCLS 1, 3)	95–97	F (NW9)	1	19021987

RPO DEFINITIONS
NW9 – TRACTION CONTROL ELECTRONIC

cardiagn.com

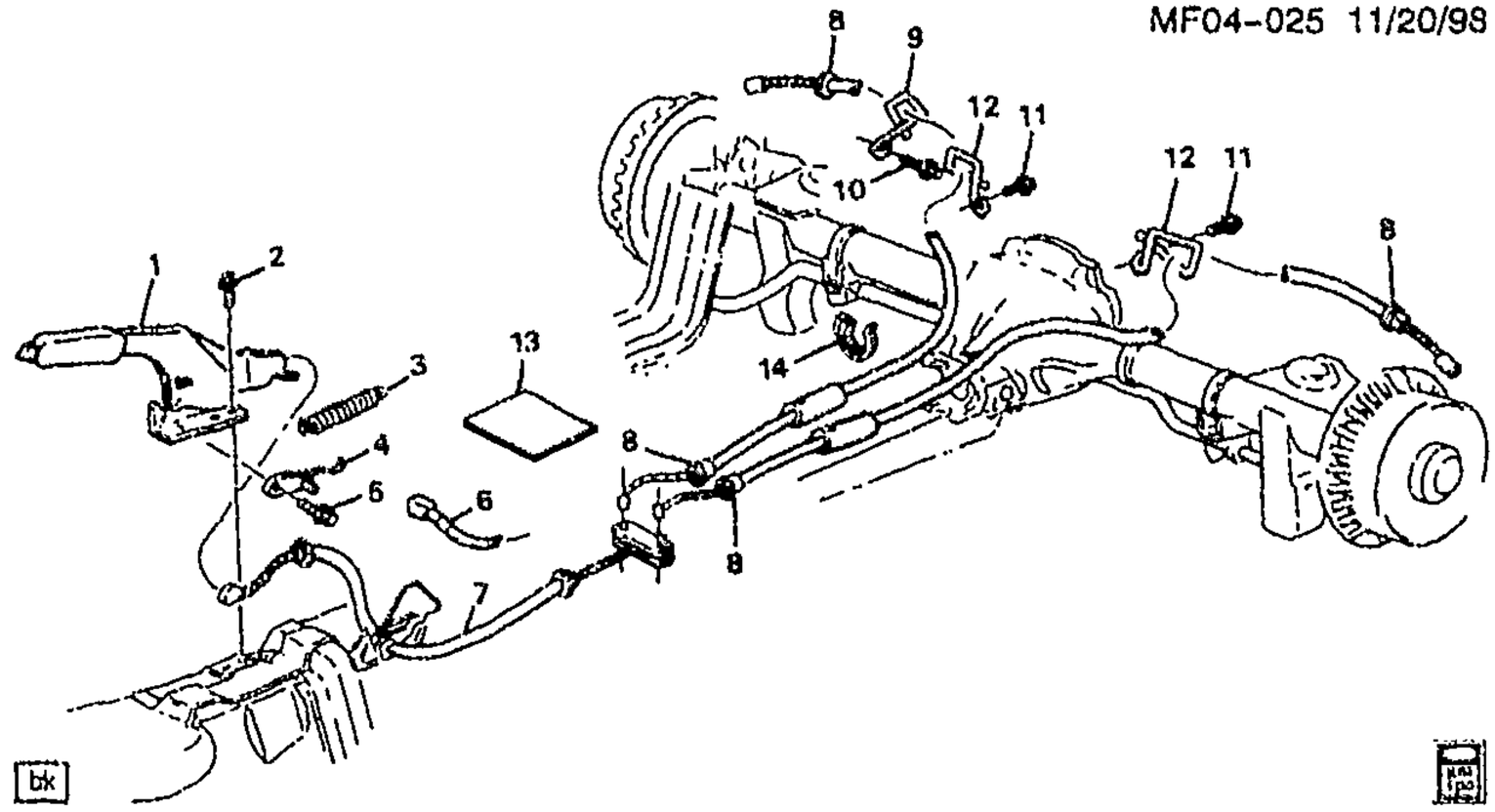

MF04-025

1993-1996 F PARKING BRAKE SYSTEM (J41)

1.	7-A5	4.591	**LEVER**, PARK BRK (INCLS 3, 4, 5)	93-96	F (NK3)	1	12455129
	7-A5	4.591	**LEVER**, PARK BRK (INCLS 3, 4, 5)	93-96	F (NP5)	1	12455130
2.		8.900	**BOLT**, HEX W/CON WA, M6X1X20	93-96		2	11514623
3.		N.S.	**SPRING**, PARK BRK LVR (PART OF 1)				
4.	7-A5	4.589	**SWITCH**, PARK BRK IND (PART OF 1)	93-96	F	1	12506876
5.		N.S.	**BOLT**, PARK BRK IND SW (PART OF 1)				
6.		8.965	**CONNECTOR**, W/LEADS (1 PIN F) (PARK BRK IND LP SW) (2.535) (AC-DELCO #PT230)	93-96		1	12102561
7.	7-A18	4.779	**CABLE**, PARK BRK FRT	93-96	F	1	10258235
	7-A18	4.779	**CABLE**, PARK BRK FRT (AC-DELCO #18P1298)	93	FP	AR	18034216
	7-A18	4.779	**CABLE**, PARK BRK FRT (AC-DELCO #18P1359)	94-95	FP	AR	18034277
8.	7-A18	4.779	**CABLE**, PARK BRK RR	93-96	F (J41)	2	10403414
	7-A18	4.779	**CABLE**, PARK BRK RR (AC-DELCO #18P1101)	93	FP (REAR DISC BRAKES)	RH	18034019
	7-A18	4.779	**CABLE**, PARK BRK RR (AC-DELCO #18P1108)	93	FP (REAR DRUM BRAKES)	LH	18034026
	7-A18	4.779	**CABLE**, PARK BRK RR (AC-DELCO #18P1358)	93-95	FP (REAR DRUM BRAKES)	RH	18034276
9.	7-A18	4.785	**GUIDE**, PARK BRK RR CBL	93-96	F	1	10258129
10.		8.977	**SCREW**, HWH TAP M8X2.12X20 17.2-OD AB PTPOR (PARK BRK RR CBL GDE)	93-96		1	11509189
11.		8.977	**SCREW**, HWH TAP M8X2.12X20 17.2-OD AB PTPOR (PARK BRK RR CBL GDE)	93-96	F	2	11509189
12.	7-A18	4.785	**GUIDE**, PARK BRK RR CBL RR	93-96	F	LH	10285818

cardiagn.com

							MP04–025
	7–A18	4.785	GUIDE, PARK BRK RR CBL RR ..	95–96	F	RH	10285519
13.		N.S.	DEADENER, FLR PNL		.....		
14.		8.965	STRAP, ADJ TIE (PARK BRK RR CBL) (AC–DELCO #12337820) ..	93–96	F	1	12337820

RPO DEFINITIONS

J41 -- BRAKE SYSTEM,POWER,FRONT DISC,REAR DRUM(CAST IRON)
NK3 – STEERING WHEEL,SPORT,SOFT RIM,SIMULATED LEATHER
NP5 – STEERING WHEEL,LEATHER WRAPPED

cardiagn.com

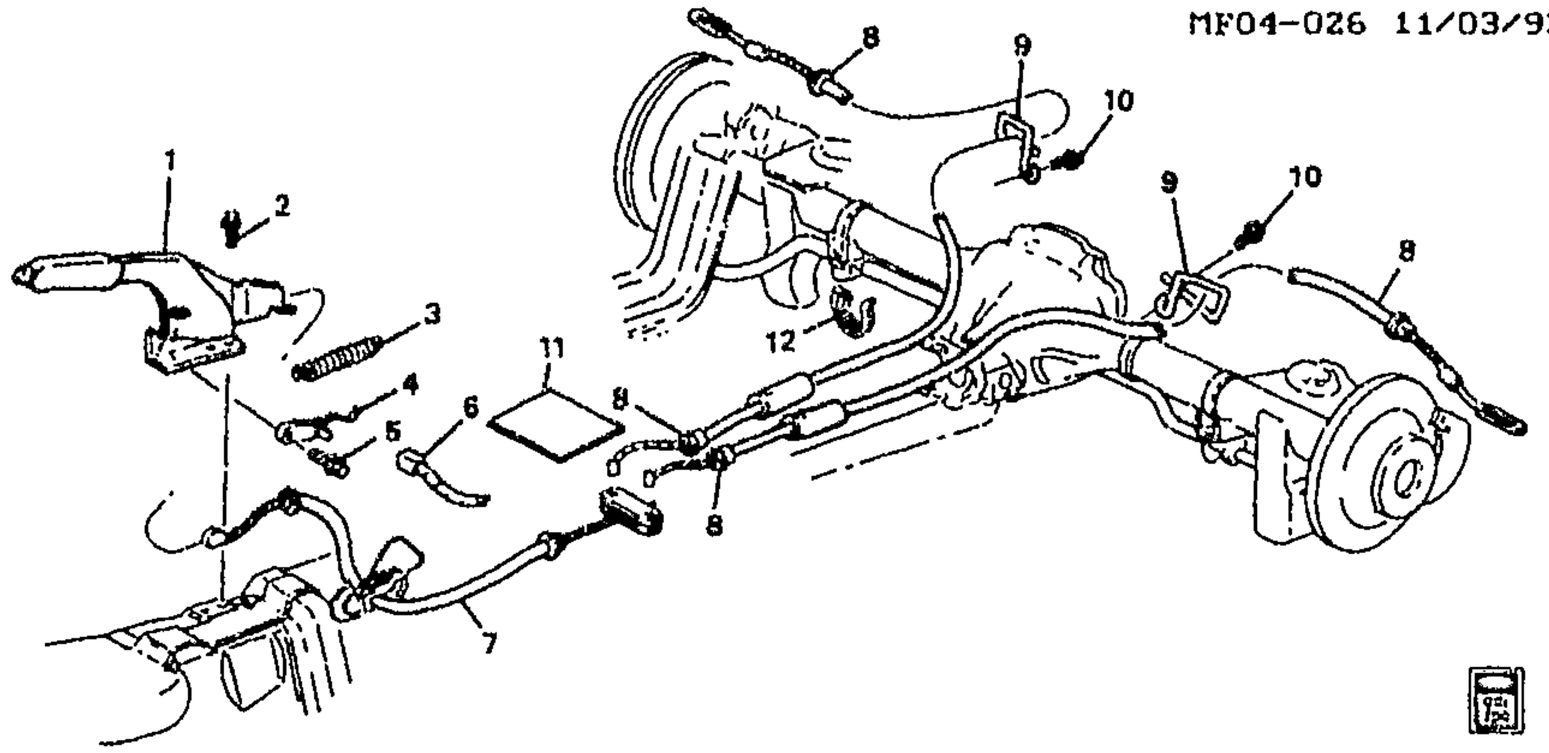

MF04-026

1993-1996 F PARKING BRAKE SYSTEM (J65)

1.	7-A5	4.591	LEVER, PARK BRK (INCLS 3-5)	93-96	F (NK3)	1	12455129
	7-A5	4.591	LEVER, PARK BRK (INCLS 3-5)	93-96	F (NP5)	1	12455130
2.		8.900	BOLT, HEX W/CON WA, M6X1X20	93-96		2	11514623
3.		N.S.	SPRING, PARK BRK LVR (PART OF 1)				
4.	7-A5	4.589	SWITCH, PARK BRK IND (PART OF 1)	93-96	F	1	12506876
5.		N.S.	BOLT, PARK BRK IND SW (PART OF 1)				
6.		8.965	CONNECTOR, W/LEADS (1 PIN F) (PARK BRK IND LP SW) (2.535) (AC-DELCO #PT230)	93-96		1	12102561
7.	7-A18	4.779	CABLE, PARK BRK FRT	93-96	F	1	10258235
	7-A18	4.779	CABLE, PARK BRK FRT (AC-DELCO #18P1298)	93	FP	AR	18034216
	7-A18	4.779	CABLE, PARK BRK FRT (AC-DELCO #18P1359)	94-95	FP	AR	18034277
8.	7-A18	4.779	CABLE, PARK BRK RR (AC-DELCO #18P1101)			LH	18034019
	7-A18	4.779	CABLE, PARK BRK RR (AC-DELCO #18P1101)			RH	18034019
	7-A18	4.779	CABLE, PARK BRK RR (AC-DELCO #18P1108)			RH	18034026
	7-A18	4.779	CABLE, PARK BRK RR (AC-DELCO #18P1108)			LH	18034026
	7-A18	4.779	CABLE, PARK BRK RR (AC-DELCO #18P1358)			LH	18034276
	7-A18	4.779	CABLE, PARK BRK RR (AC-DELCO #18P1358)			RH	18034276
9.	7-A18	4.785	GUIDE, PARK BRK RR CBL	93-96	F	1	10258129
10.		8.977	SCREW, HWH TAP M8X2.12X20 17.2-OD AB PTPOR (PARK BRK RR CBL GDE)	93-96	F	2	11509189
11.		N.S.	DEADENER, FLR PNL				
12.		8.965	STRAP, ADJ TIE (PARK BRK RR CBL) (AC-DELCO #12337820)	93-96	F	1	12337820

cardiagn.com

RPO DEFINITIONS
J65 – BRAKE SYSTEM,POWER,FRONT AND REAR DISC
NK3 – STEERING WHEEL,SPORT,SOFT RIM,SIMULATED LEATHER
NP5 – STEERING WHEEL,LEATHER WRAPPED

cardiagn.com

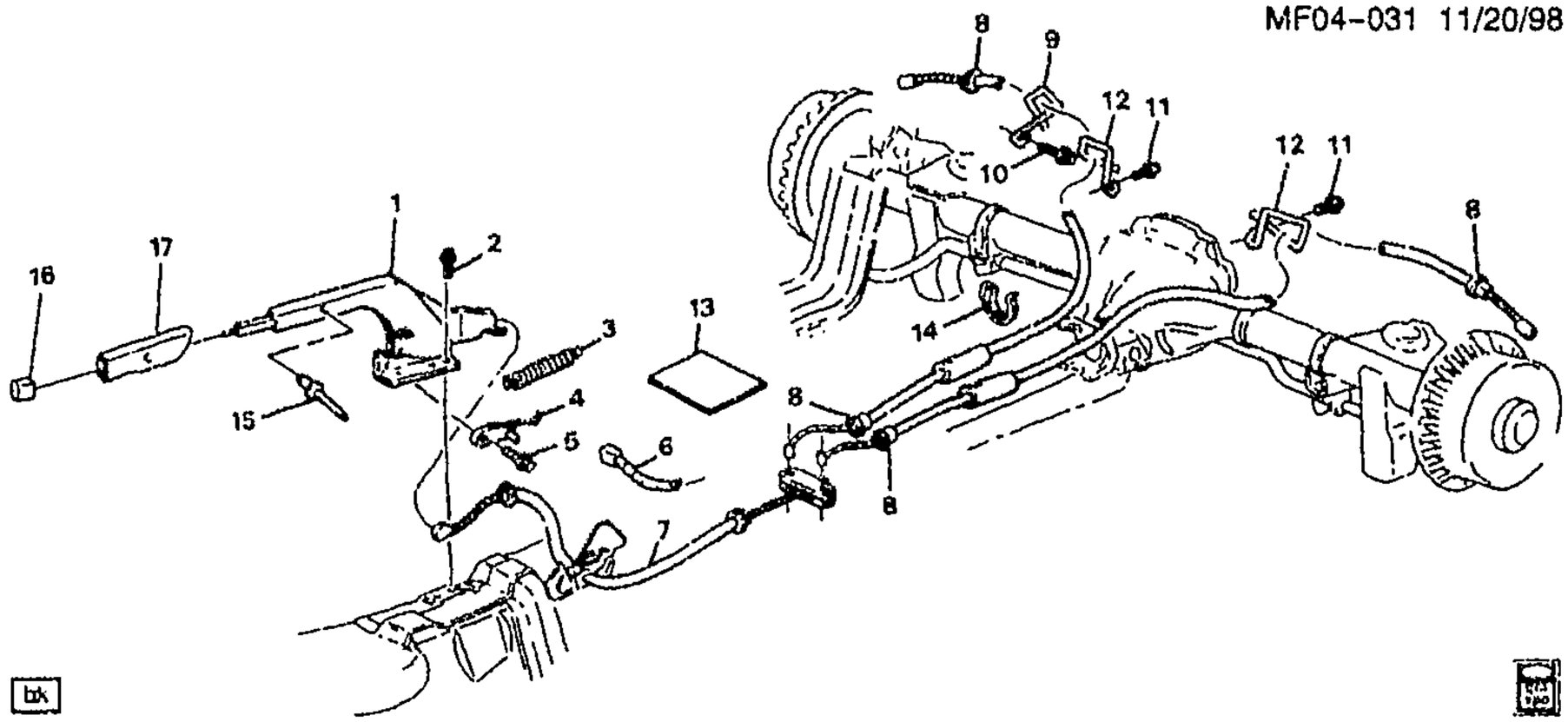

MF04-031

1997 F PARKING BRAKE SYSTEM (J41)

1.	7-A5	4.591	**LEVER**, PARK BRK (INCLS 3-5, 15-17)	97	F (NK3)	1	12455129
	7-A5	4.591	**LEVER**, PARK BRK (INCLS 3-5, 15-17)	97	F (NP5)	1	12455130
2.		8.900	**BOLT**, HEX W/CON WA, M6X1X20	97		2	11514623
3.		N.S.	**SPRING**, PARK BRK LVR (PART OF 1)				
4.	7-A5	4.589	**SWITCH**, PARK BRK IND (PART OF 1)	97	F	1	12506876
5.		N.S.	**BOLT**, PARK BRK IND SW (PART OF 1)				
6.		8.965	**CONNECTOR**, W/LEADS (1 PIN F) (PARK BRK IND LP SW) (2.535) (AC-DELCO #PT230)	97		1	12102561
7.	7-A18	4.779	**CABLE**, PARK BRK FRT	97	F	1	10258235
8.	7-A18	4.779	**CABLE**, PARK BRK RR	97	F (J41)	2	10403414
9.	7-A18	4.785	**GUIDE**, PARK BRK RR CBL	97	F	1	10258129
10.		8.977	**SCREW**, HWH TAP M8X2.12X20 17.2-OD AB PTPOR (PARK BRK RR CBL GDE)	97		1	11509189
11.		8.977	**SCREW**, HWH TAP M8X2.12X20 17.2-OD AB PTPOR (PARK BRK RR CBL GDE)	97	F	2	11509189
12.	7-A18	4.785	**GUIDE**, PARK BRK RR CBL RR	97	F	LH	10285818
	7-A18	4.785	**GUIDE**, PARK BRK RR CBL RR	97	F	RH	10285819
13.		N.S.	**DEADENER**, FLR PNL				
14.		8.965	**STRAP**, ADJ TIE (PARK BRK RR CBL) (AC-DELCO #12337820)	97	F	1	12337820
15.		8.967	**RIVET**, POP, 1/8 SHANK, .32 LEN, .126-.187 GRIP, STL, ZP (PART OF 1) (DRILL OUT OLD RIVIT & REPLACE COMPONENTS)	97		AR	9437144

cardiagn.com

		8.977	**SCREW-ROUNDWASHER** M4.2X1.4X13, 8.63OD, 6010M, 6138M, C/R, TAP (PART OF 1) (USE RIVIT OR SCREW TO ATTACH HANDLE)	97	.....	AR	11515893
16.	7-A5	4.592	**PUSHBUTTON**, PARK BRK LVR REL (PART OF 1)	97	F	1	10291073
17.	7-A5	4.592	**HANDLE**, PARK BRK LVR (PART OF 1) (GRIP PORTION ONLY)	97	F (NK3)	1	10291074
	7-A5	4.592	**HANDLE**, PARK BRK LVR (PART OF 1) (GRIP PORTION ONLY)	97	F (NP5)	1	10291075

RPO DEFINITIONS

J41 -- BRAKE SYSTEM,POWER,FRONT DISC,REAR DRUM(CAST IRON)
NK3 -- STEERING WHEEL,SPORT,SOFT RIM,SIMULATED LEATHER
NP5 -- STEERING WHEEL,LEATHER WRAPPED

cardiagn.com

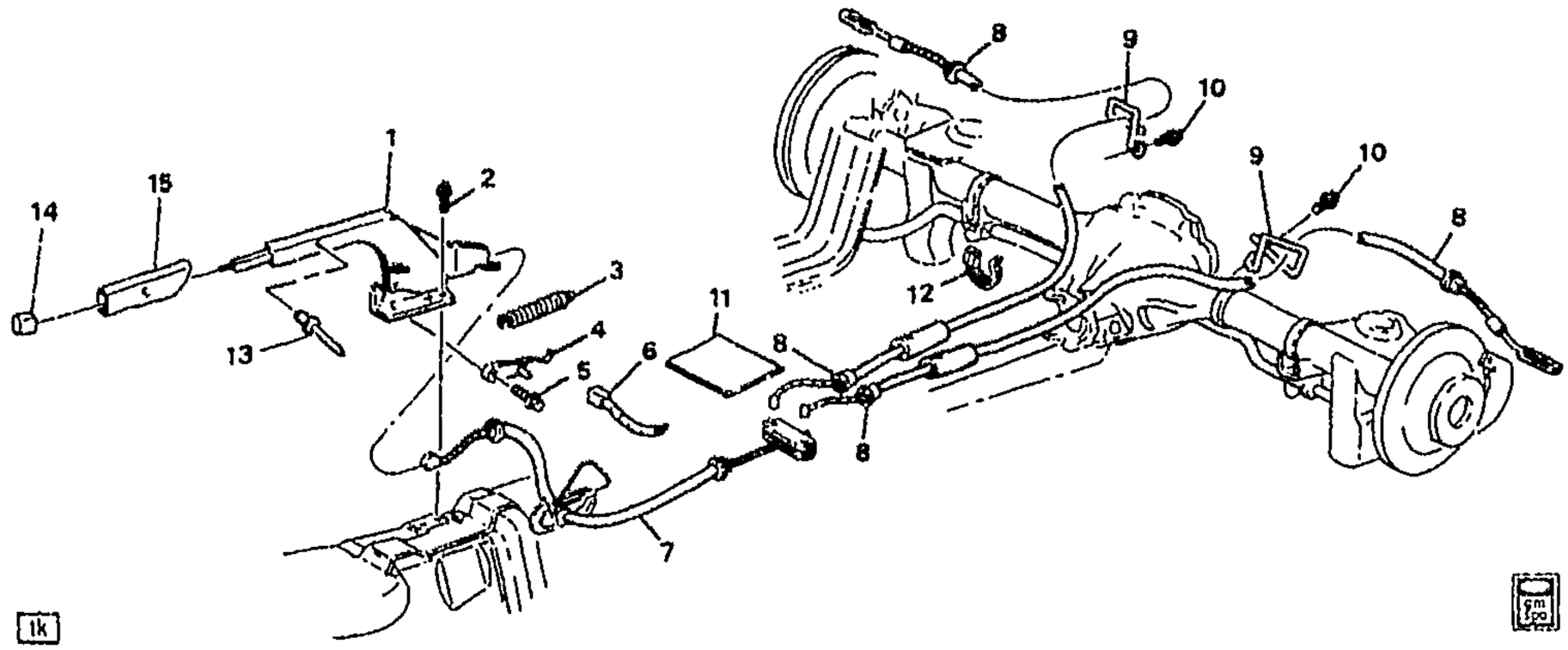

MF04-032

1997-2002 F PARKING BRAKE SYSTEM (J65)

1.	7-A5	4.591	LEVER, PARK BRK (INCLS 3-5, 13-15)	97	F (NK3)	1	12455129
	7-A5	4.591	LEVER, PARK BRK (INCLS 3-5, 13-15)	97	F (NP5)	1	12455130
	7-A5	4.591	LEVER, PARK BRK (INCLS 3-5, 13-15)	98-99	F (NK3)	1	12455131
	7-A5	4.591	LEVER, PARK BRK (INCLS 3-5, 13-15)	98-99	F (NP5)	1	12455132
	7-A5	4.591	LEVER, PARK BRK (INCLS 3-5, 13-15)	00-02	F (NK3)	1	10417437
	7-A5	4.591	LEVER, PARK BRK (INCLS 3-5, 13-15)	00-02	F (NP5)	1	10417438
2.		8.900	BOLT, HEX W/CON WA, M6X1X20	97-02		2	11514623
3.		N.S.	SPRING, PARK BRK LVR (PART OF 1)				
4.	7-A5	4.589	SWITCH, PARK BRK IND (PART OF 1)	97-02	F	1	12506876
5.		N.S.	BOLT, PARK BRK IND SW (PART OF 1)				
6.		8.965	CONNECTOR, W/LEADS (1 PIN F) (PARK BRK IND LP SW) (2.535) (AC-DELCO #PT230)	97-02		1	12102561
7.	7-A18	4.779	CABLE, PARK BRK FRT	97	F	1	10258235
	7-A18	4.779	CABLE, PARK BRK FRT	98-02	F	1	10288166
8.	7-A18	4.779	CABLE, PARK BRK RR	97	F (J65)	2	10255382
	7-A18	4.779	CABLE, PARK BRK RR	98-02	F (J65)	2	10424968
9.	7-A18	4.785	GUIDE, PARK BRK RR CBL	97-02	F	1	10258129
10.		8.977	SCREW, HWH TAP M8X2.12X20 17.2-OD AB PTPOR (PARK BRK RR CBL GDE)	97-02	F	2	11509180
11.	7-N25	12.980	DEADENER, FLR PNL	97-02	F	1	10249163
12.		8.965	STRAP, ADJ TIE (PARK BRK RR CBL) (AC-DELCO #12337820)	97-02	F	1	12337820

cardiagn.com

13.		8.967	**RIVET**, POP, 1/8 SHANK, .32 LEN, .126--.187 GRIP, STL, ZP (PART OF 1) (DRILL OUT OLD RIVIT & REPLACE COMPONENTS)	97-02	.....	AR	9437144
		8.977	**SCREW-ROUNDWASHER** M4.2X1.4X13, 8.63OD, 6010M, 6138M, C/R, TAP (PART OF 1) (USE RIVIT OR SCREW TO ATTACH HANDLE)	97-02	.....	AR	11515893
14.	7-A5	4.592	**PUSHBUTTON**, PARK BRK LVR REL (PART OF 1)	97-02	F	1	10291073
15.	7-A5	4.592	**HANDLE**, PARK BRK LVR (PART OF 1) (GRIP PORTION ONLY)	97-99	F (NK3)	1	10291074
	7-A5	4.592	**HANDLE**, PARK BRK LVR (PART OF 1) (GRIP PORTION ONLY)	97-99	F (NP5)	1	10291075
	7-A5	4.592	**HANDLE**, PARK BRK LVR (PART OF 1)	00-02	F (NK3)	1	10417439
	7-A5	4.592	**HANDLE**, PARK BRK LVR (PART OF 1)	00-02	F (NP5)	1	10417440

RPO DEFINITIONS

J65 – BRAKE SYSTEM,POWER,FRONT AND REAR DISC
NK3 – STEERING WHEEL,SPORT,SOFT RIM,SIMULATED LEATHER
NP5 – STEERING WHEEL,LEATHER WRAPPED

cardiagn.com

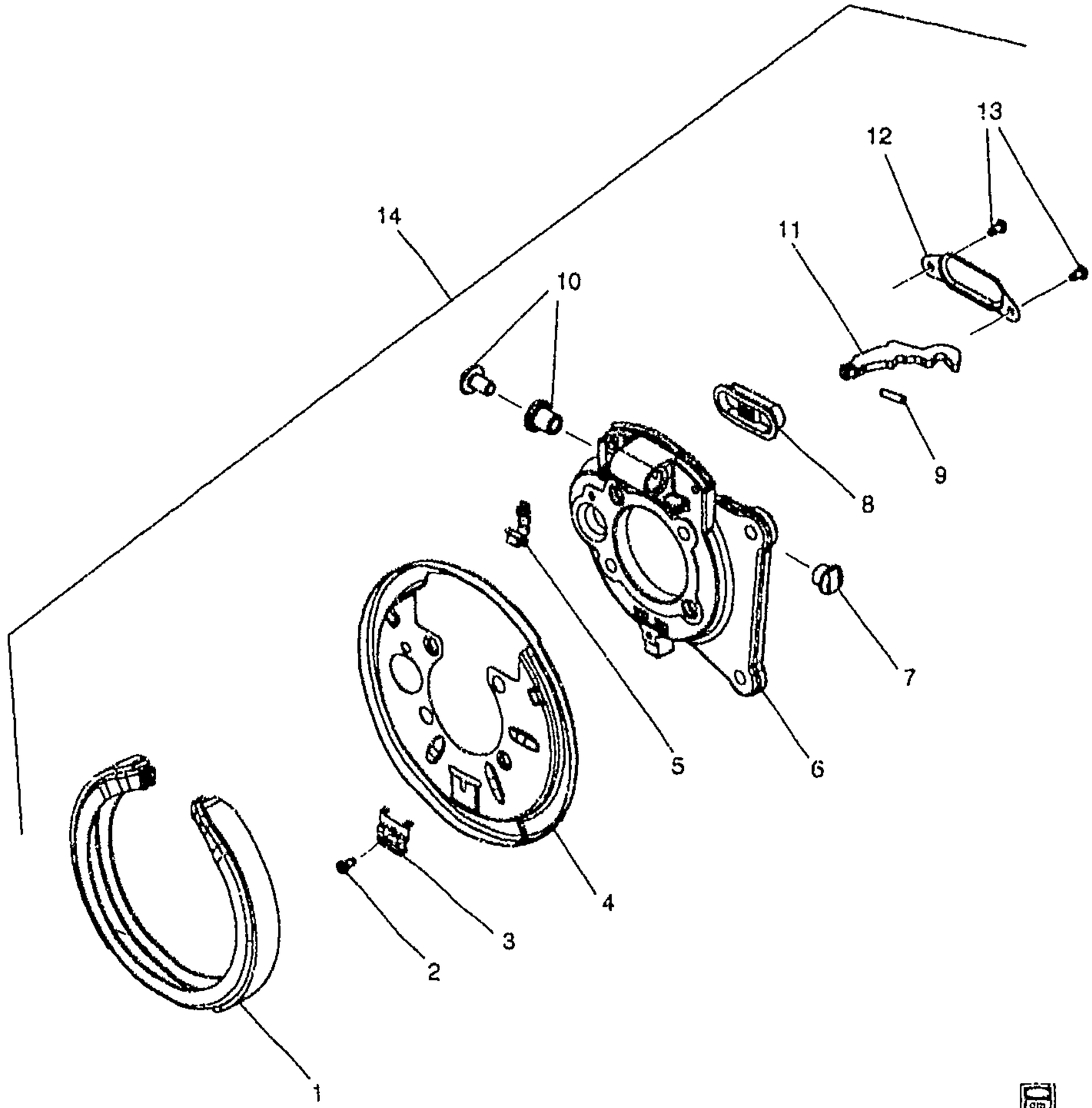

bb

MF04-038

1998--2002 F PARKING BRAKE ASM TO REAR AXLE

1.		N.S.	SHOE/LINING (PART OF 14) (*KIT1, KIT2)				
2.		N.S.	SCREW, SELF TAPPING (PART OF 14) (*KIT1, KIT2)				
3.		N.S.	SPRING, HOLD DOWN (PART OF 14) (*KIT2)				
4.	7-B14	5.002	SHIELD, RR BRK (PART OF 14)	98-02	F (EXC G80)	LH	12454976
	7-B14	5.002	SHIELD, RR BRK (PART OF 14)	98-02	F (EXC G80)	RH	12454977
5.		N.S.	PAWL, ADJUSTMENT (PART OF 14) (*KIT2)				

cardiagn.com

6.	7-B13	5.001	**PLATE**, RR BRK BKG (PART OF 14)	98	F (L36) (EXC NW9)	LH	12454982
	7-B13	5.001	**PLATE**, RR BRK BKG (PART OF 14)	98	F (EXC NW9)	RH	12454983
	7-B13	5.001	**PLATE**, RR BRK BKG (PART OF 14)	99-02	F (L36) (EXC G80)	LH	12454982
	7-B13	5.001	**PLATE**, RR BRK BKG (PART OF 14)	99-02	F (L36) (EXC G80)	RH	12454983
	7-B13	5.001	**PLATE**, RR BRK BKG (W/TCS) (PART OF 14)	98-02	F (NW9)	LH	12454980
	7-B13	5.001	**PLATE**, RR BRK BKG (W/TCS) (PART OF 14)	98-02	F (NW9)	RH	12454981
7.		N.S.	**TAPPET** (PART OF 14) (*KIT2)				
8.		N.S.	**COVER**, DUST (PART OF 14) (*KIT2)				
9.		N.S.	**PUSHROD**, HANDBRAKE (PART OF 14) (*KIT2)				
10.		N.S.	**NUT**, ADJUSTING (PART OF 14) (*KIT2)			2	
11.		N.S.	**LEVER**, HANDBRAKE (PART OF 14) (*KIT2)				
12.		N.S.	**RETAINER**, BOOT (PART OF 14) (*KIT2)				
13.		N.S.	**SCREWS**, BOOT RETAINER (PART OF 14) (*KIT2)				
14.	7-B13	5.001	**PLATE**, RR BRK CLPR MT (INCLS 1-13) (INCLS PRK BRK SHOE)	98-02	F (LS1, NW9)	LH	10434794
	7-B13	5.001	**PLATE**, RR BRK CLPR MT (INCLS 1-13) (INCLS PRK BRK SHOE)	98-02	F (LS1, NW9)	RH	10434795
	7-B13	5.001	**PLATE**, RR BRK CLPR MT (INCLS 1-13) (INCLS PRK BRK SHOE)	98-02	F (LS1) (EXC NW9)	LH	10434796
	7-B13	5.001	**PLATE**, RR BRK CLPR MT (INCLS 1-13) (INCLS PRK BRK SHOE)	98-02	F (L36)	LH	10434796
	7-B13	5.001	**PLATE**, RR BRK CLPR MT (INCLS 1-13) (INCLS PRK BRK SHOE)	98-02	F (LS1) (EXC NW9)	RH	10434797
	7-B13	5.001	**PLATE**, RR BRK CLPR MT (INCLS 1-13) (INCLS PRK BRK SHOE)	98-02	F (L36)	RH	10434797

SERVICE KITS

1.	7-C17	5.605	**LINING KIT**, PARK BRK SHOE (INCLS 1, 2)	98-02	F (EXC G80)	2	12454993
2.	7-B17	5.149	**BRAKE KIT**, RR PARK (INCLS 1-3, 5, 7-13)	98-02	F (EXC G80)	2	12454994

RPO DEFINITIONS

G80 – AXLE,REAR,POSITRACTION,LIMITED SLIP
LS1 – ENGINE GAS, 8 CYL, 5.7L, SFI, ALUMINUM ENGINE
L36 – ENGINE GAS, 6 CYL, 3.8K, MFI, V6, HO (ERV6 SERIES)
NW9 – TRACTION CONTROL ELECTRONIC

cardiagn.com

ILLUSTRATION INDEX

	TITLE	GRID
1993–1997	F BRAKE ASM/REAR DRUM (J41)	7–H4
1993	F AXLE ASM/REAR	7–H9
1994	F AXLE ASM/REAR	7–H14
1995–1997	F AXLE ASM/REAR (EXC NW9)	7–H14
1995–1997	F AXLE ASM/REAR (NW9)	7–H21
1998–2002	F AXLE ASM/REAR (J65,EXC NW9)	7–I2
98–2002	F AXLE ASM/REAR (NW9)	7–I9
1993	F PROP SHAFT (LT1/5.7P)(1ST DES)	7–I16
1993	F PROP SHAFT (LT1/5.7P)(2ND DES)	7–I17
1994–1997	F PROP SHAFT (LT1/5.7P)	7–I17
1993–1995	F PROP SHAFT (L32/3.4S)	7–I19
1995–2002	F PROP SHAFT (L36/3.8K)	7–I21
1993–1996	F WHEELS & WHEEL COVERS	7–I24
1997	F WHEELS & WHEEL COVERS	7–J2
1998–2002	F WHEELS & WHEEL COVERS	7–J5

cardiagn.com

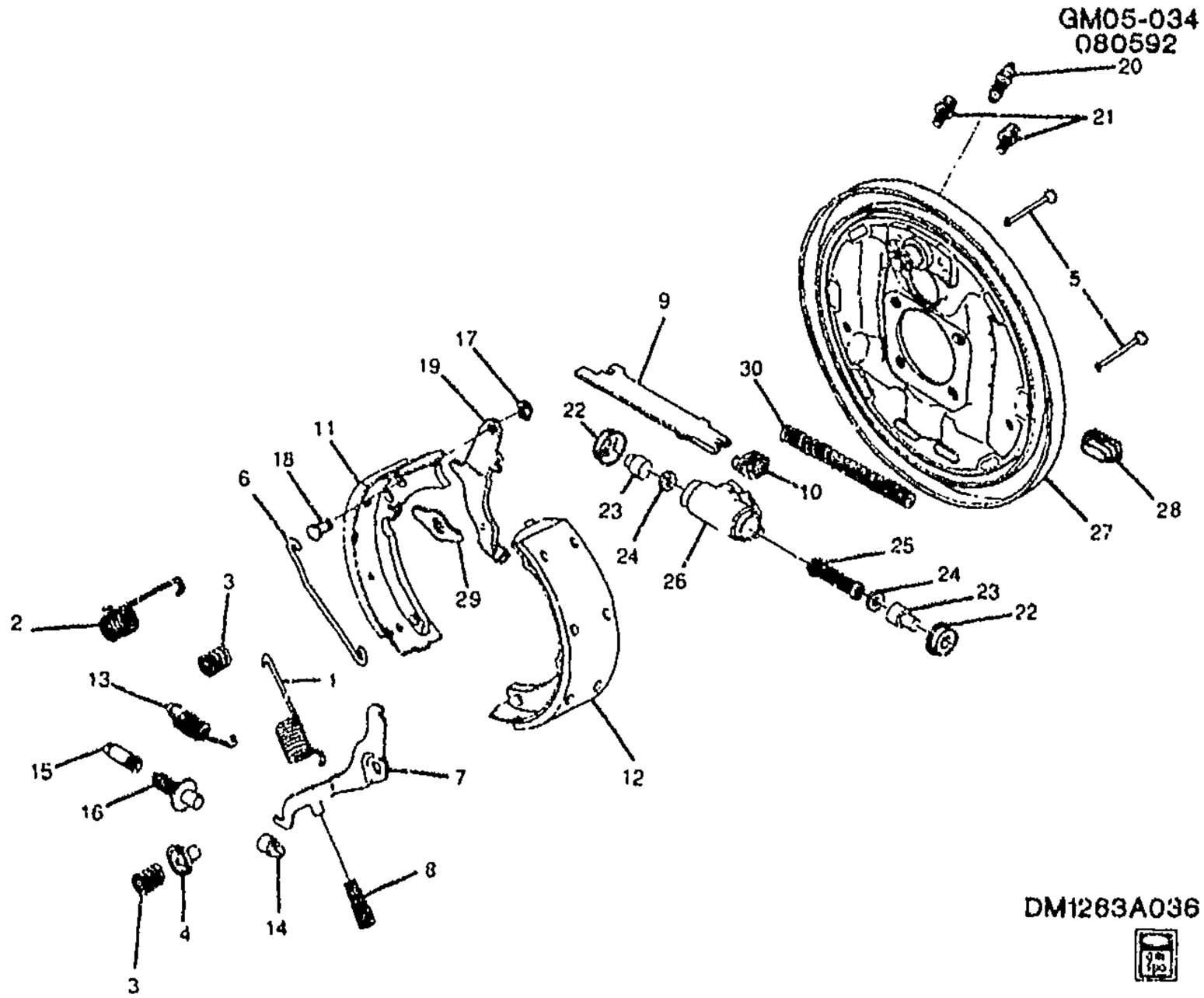

GM05–034

1993–1997 F BRAKE ASM/REAR DRUM (J41)

1.	N.S.	**SPRING**, RR BRK SHOE RTN (*KIT3)	
2.	N.S.	**SPRING**. RR BRK SHOE RTN (*KIT3)	
3.	N.S.	**SPRING**, RR BRK SHOE HOLDN (*KIT4)	
4.	N.S.	**PIVOT**, RR BRK SHOE ADJR ACTR (*KIT4, KIT5)	
5.	N.S.	**PIN**, RR BRK SHOE (*KIT4)	
6.	N.S.	**LINK**, RR BRK SHOE ADJR ACTR (*KIT5)	
7.	N.S.	**ACTUATOR**, RR BRK SHOE ADJR (*KIT5)	
8.	N.S.	**SPRING**, RR BRK SHOE ADJR PAWL (*KIT3, KIT5)	
9.	N.S.	**STRUT**, RR PARK BRK LVR (*KIT7)	
10.	N.S.	**SPRING**, RR PARK BRK LVR STRUT (*KIT3, KIT7)	
11.	N.S.	**SHOE**, RR BRK PRIM (*KIT8)	
12.	N.S.	**SHOE**, RR BRK SECD (*KIT8)	
13.	N.S.	**SPRING**, RR BRK SHOE ADJR (*KIT3)	

cardiagn.com

14.		N.S.	SOCKET, RR BRK SHOE ADJR (*KIT6)				
15.		N.S.	NUT, RR BRK SHOE ADJR (*KIT6)				
16.		N.S.	ADJUSTER, RR BRK SHOE (*KIT6)				
17.		N.S.	RING, RR PARK BRK LVR RET (*KIT7)				
18.		N.S.	PIN, RR PARK BRK LVR PIV (*KIT7)				
19.		N.S.	LEVER, RR PARK BRK (*KIT7)				
20.	7-A10	4.666	VALVE, RR BRK BLEDR (*KIT1) (AC-DELCO #179-1098)	93-95	F (J41)	2	18060081
	7-A10	4.666	VALVE, RR BRK BLEDR (*KIT1) (AC-DELCO #179-1098)	95-97	F (L36, GU4, GU5, GU6, J41) (EXC G80, NW9)	2	18060081
21.	7-A7	4.665	BOLT, RR BRK CYL (1/4X20.00X33/64) (W/LK WA)	93-95	F (J41)	4	15598991
	7-A7	4.665	BOLT, RR BRK CYL (1/4X20.00X33/64) (W/LK WA)	96-97	F (L36, GU4, GU5, GU6, J41) (EXC G80, NW9)	4	15598991
22.		N.S.	BOOT, RR BRK CYL PSTN (*KIT1, KIT2)				
23.		N.S.	PISTON, RR BRK CYL (*KIT1)				
24.		N.S.	SEAL, RR BRK CYL PSTN (*KIT1, KIT2)				
25.		N.S.	SPRING, RR BRK CYL PSTN (*KIT1, KIT2)				
26.		N.S.	BODY, RR BRK CYL (*KIT1, KIT2)				
27.	7-B13	5.001	PLATE, RR BRK BKG	93-95	F (J41)	RH	18012021
	7-B13	5.001	PLATE, RR BRK BKG	93-95	F (J41)	LH	18012022
	7-B13	5.001	PLATE, RR BRK BKG	96-97	F (L36, GU4, GU5, GU6, J41) (EXC G80, NW9)	RH	18012021
	7-B13	5.001	PLATE, RR BRK BKG	96-97	F (L36, GU4, GU5, GU6, J41) (EXC G80, NW9)	LH	18012022
28.	7-B17	5.117	PLUG, RR BRK ADJR ACC HOLE (RUBBER) (AC-DELCO #179-358)	93-95	F (J41)	2	5464803
	7-B17	5.117	PLUG, RR BRK ADJR ACC HOLE (RUBBER) (AC-DELCO #179-358)	96-97	F (L36, GU4, GU5, GU6, J41) (EXC G80, NW9)	2	5464803
29.	7-B16	5.045	GUIDE, RR BRK SHOE	93-95	F (J41)	2	5460399
	7-B16	5.045	GUIDE, RR BRK SHOE	96-97	F (L36, GU4, GU5, GU6, J41) (EXC G80, NW9)	2	5460399
30.	7-A5	4.606	SPRING, PARK BRK LVR RTN	93-95	F (J41)	1	18019505
	7-A5	4.606	SPRING, PARK BRK LVR RTN	96-97	F (L36, GU4, GU5, GU6, J41) (EXC G80, NW9)	1	18019505

cardiagn.com

SERVICE KITS

1.	7–A7	4.665	**CYLINDER**, RR BRK (INCL 20, 22, 23, 24, 25, 26) (AC–DELCO #172–1520)	93–95	F (J41)	2	18060174
	7–A7	4.665	**CYLINDER**, RR BRK (INCL 20, 22, 23, 24, 25, 26) (AC–DELCO #18E383)	93–97	FP	LH	18029563
	7–A7	4.665	**CYLINDER**, RR BRK (INCL 20, 22, 23, 24, 25, 26) (AC–DELCO #172–1520)	96–97	F (L36, GU4, GU5, GU6, J41) (EXC G80, NW9)	2	18060174
2.	7–A10	4.667	**CYLINDER KIT**, RR BRK (INCL 22, 24, 25, 26) (AC–DELCO #173–282)	93–97	F (J41)	2	18020127
	7–A10	4.667	**CYLINDER KIT**, RR BRK (13/16 CYLINDER BORE) (INCL 22, 24, 25, 26) (AC–DELCO #18G179)	93–97	FP	AR	18031358
3.	7–B16	5.026	**SPRING**, RR BRK SHOE RTN (INCL 1, 2, 8, 10, 13) (W/9.5 X 2 BRKS) (INCLS RETN SPRGS, ADJ SPRG, P/BRK LVR SPRG & CYLINDER) (AC–DELCO #179–1048)	93–95	F (J41)	1	18012261
	7–B16	5.026	**SPRING**, RR BRK SHOE RTN (INCL 1, 2, 8, 10, 13) (W/9.5 X 2 BRKS) (INCLS RETN SPRGS, ADJ SPRG, P/BRK LVR SPRG & CYLINDER) (AC–DELCO #179–1048)	96–97	F (L36, GU4, GU5, GU6, J41) (EXC G80, NW9)	1	18012261
4.	7–B16	5.043	**SPRING KIT**, RR BRK SHOE HOLDN (INCL 3, 4, 5) (9.5 X 2 BRK) (INCL SPRGS, SLEV, PIN, CUP & PLUG) (AC–DELCO #179–1181)	93–95	F (J41)	1	18002399
	7–B16	5.043	**SPRING KIT**, RR BRK SHOE HOLDN (INCL 3, 4, 5) (9.5 X 2 BRK) (INCL SPRGS, SLEV, PIN, CUP & PLUG) (AC–DELCO #179–1181)	96–97	F (L36, GU4, GU5, GU6, J41) (EXC G80, NW9)	1	18002399
5.	7–B16	5.103	**ADJUSTER KIT**, RR BRK SHOE (INCL 4, 6, 7, 8) (AC–DELCO #18K60)	93–97	FP	LH	18034434
	7–B16	5.103	**ADJUSTER KIT**, RR BRK SHOE (INCL 4, 6, 7, 8) (AC–DELCO #18K61)	93–97	FP	RH	18034435
	7–B16	5.103	**ADJUSTER KIT**, RR BRK SHOE (INCL 4, 6, 7, 8) (9.5 X 2 BRK) (INCLS ACTR, LINK, LVR, SLEV & SPR) (AC–DELCO #179–1049)	93–95	F (J41)	LH	18012262
	7–B16	5.103	**ADJUSTER KIT**, RR BRK SHOE (INCL 4, 6, 7, 8) (9.5 X 2 BRK) (INCLS ACTR, LINK, SLEV & SPR) (AC–DELCO #179–1050)	93–95	F (J41)	RH	18012263
	7–B16	5.103	**ADJUSTER KIT**, RR BRK SHOE (INCL 4, 6, 7, 8) (9.5 X 2 BRK) (INCLS ACTR, LINK, LVR, SLEV & SPR) (AC–DELCO #179–1049)	96–97	F (L36, GU4, GU5, GU6, J41) (EXC G80, NW9)	LH	18012262

cardiagn.com

	7-B16	5.103	ADJUSTER KIT, RR BRK SHOE (INCL 4, 6, 7, 8) (9.5 X 2 BRK) (INCLS ACTR, LINK, SLEV & SPR) (AC-DELCO #179-1050) .	96-97	F (L36, GU4, GU5, GU6, J41) (EXC G80, NW9)	RH	18012263
6.	7-B16	5.103	BOLT KIT, RR BRK SHOE ADJ (INCL 14, 15, 16) (5.110) (AC-DELCO #18K529)	93-97	FP	LH	18034903
	7-B16	5.103	BOLT KIT, RR BRK SHOE ADJ (INCL 14, 15, 16) (7/16X20UNC-2AX2.18) (1.52 THD, .6OD, SAE 1008--1022STL, ZP CLEAR, MACH.) (5.110) (AC-DELCO #18K530)	93-97	FP	RH	18034904
	7-B16	5.103	BOLT KIT, RR BRK SHOE ADJ (AUTO) (INCL 14, 15, 16) (INCLS SHOE AUTO ADJ, NUT & ADJ SOC) (AC-DELCO #179-1051) .	93-95	F (J41)	LH	18012264
	7-B16	5.103	BOLT KIT, RR BRK SHOE ADJ (AUTO) (INCL 14, 15, 16) (INCLS SHOE AUTO ADJ, NUT & ADJ SOC) (AC-DELCO #179-1052) .	93-95	F (J41)	RH	18012265
	7-B16	5.103	BOLT KIT, RR BRK SHOE ADJ (AUTO) (INCL 14, 15, 16) (INCLS SHOE AUTO ADJ, NUT & ADJ SOC) (AC-DELCO #179-1051) .	96-97	F (L36, GU4, GU5, GU6, J41) (EXC G80, NW9)	LH	18012264
	7-B16	5.103	BOLT KIT, RR BRK SHOE ADJ (AUTO) (INCL 14, 15, 16) (INCLS SHOE AUTO ADJ, NUT & ADJ SOC) (AC-DELCO #179-1052) .	96-97	F (L36, GU4, GU5, GU6, J41) (EXC G80, NW9)	RH	18012265
7.	7-B17	5.149	LEVER KIT, RR PARK BRK (W/STRUT) (INCL 9, 10, 17, 18, 19)	93-95	F (J41)	LH	18020100
	7-B17	5.149	LEVER KIT, RR PARK BRK (W/STRUT) (INCL 9, 10, 17, 18, 19)	93-95	F (J41)	RH	18020101
	7-B17	5.149	LEVER KIT, RR PARK BRK (W/STRUT) (INCL 9, 10, 17, 18, 19)	96-97	F (L36, GU4, GU5, GU6, J41) (EXC G80, NW9)	LH	18020100
	7-B17	5.149	LEVER KIT, RR PARK BRK (W/STRUT) (INCL 9, 10, 17, 18, 19)	96-97	F (L36, GU4, GU5, GU6, J41) (EXC G80, NW9)	RH	18020101
8.	7-B14	5.017	SHOE KIT, RR BRK (INCL 11, 12) (9.5 X 2 BRK) (DRUM) (W/O CYL PUSH ROD) (AC-DELCO #171-434) (ASBESTOS FREE) ..	93-95	F (J41)	1	18012259
	7-B14	5.017	SHOE KIT, RR BRK (INCL 11, 12) (9.5 X 2 BRK) (DRUM) (W/O CYL PUSH ROD) (AC-DELCO #171-434) (ASBESTOS FREE) ..	96-97	F (L36, GU4, GU5, GU6, J41) (EXC G80, NW9)	1	18012259
	7-B14	5.017	SHOE KIT, RR BRK (9 1/2 D.D. X 2 WIDTH) (INCL 11, 12) (AC-DELCO #17514R)	93-97	FP (REAR DRUM)	AR	18029694

RPO DEFINITIONS

GU4 – AXLE,REAR,3.08 RATIO
GU5 – AXLE,REAR,3.23 RATIO
GU6 – AXLE,REAR,3.42 RATIO
G80 – AXLE,REAR,POSITRACTION,LIMITED SLIP
J41 – BRAKE SYSTEM,POWER,FRONT DISC,REAR DRUM(CAST IRON)
L36 – ENGINE GAS, 6 CYL, 3.8K, MFI, V6, HO (ERV6 SERIES)

cardiagn.com

cardiagn.com

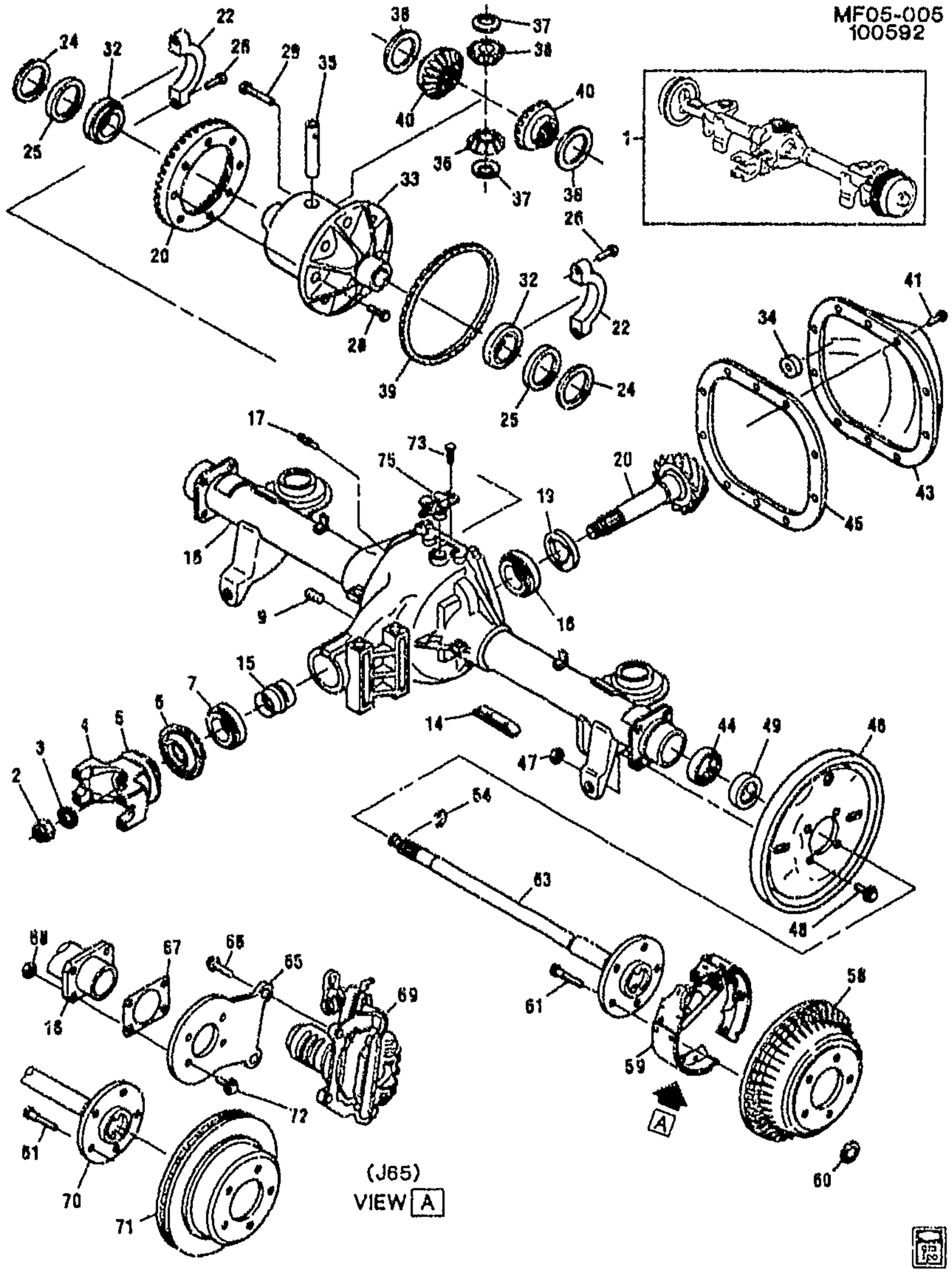

MF05-005

1993 F AXLE ASM/REAR

1.	DISCON	AXLE, RR (2.73 RATIO) (CODE 9PA)	93	F (GU2, G80, J65, Y03)	1	26038960
	DISCON	AXLE, RR (3.23 RATIO) (CODE 8HM)	93	F (GU5, J41, Y03) (EXC G80)	1	26019823

cardiagn.com

		DISCON	AXLE, RR (3.23 RATIO) (CODE 9HM)	93	F (GU5, J41) (EXC G80)	1	26038881
		DISCON	AXLE, RR (3.23 RATIO) (CODE 9PF, 9PD, 9PB)	93	F (GU5, G80, J65) (EXC J1F)	1	26041287
		DISCON	AXLE, RR (3.23 RATIO) (CODE 9PF, 9PD, 9PB)	93	F (GU5, G80, J65, Y03)	1	26041287
		DISCON	AXLE, RR (2.73 RATIO) (CODE 9PL)	93	F (GU2, G80, J1F, J65) (EXPORT)	1	26040683
		DISCON	AXLE, RR (3.23 RATIO) (CODE 9PM, 9PP) (PAINTED FOR EXPORT)	93	F (GU5, G80, J1F, J65) (EXPORT)	1	12558032
2.	7-C17	5.595	NUT, DIFF DRV P/GR (7/8-14 X 11/16)	93	F	2	9783762
3.	7-C17	5.595	WASHER, DIFF DRV P/GR (57/64 X 1 5/8 X 3/16)	93	F	1	517900
4.	7-C15	5.545	YOKE, DIFF DRV P/GR (27 TEETH) (INCLS DEFLECTOR)	93	F	1	7827670
5.		N.S.	DEFLECTOR, DIFF DRV P/GR DIRT				
6.	7-C6	5.469	SEAL, DIFF DRV P/GR	93	F	1	26026792
7.	7-C5	5.447	BEARING, DIFF DRV P/GR OTR (INCLS CUP & CONE) (TIMKEN M-86649--M-86610) (AC-DELCO #S9)	93	F	1	9417784
9.	7-C4	5.400	PLUG, R/AXL HSG FILL (1/2-14X.610, STL, PEOR) (HEADLESS SQ SOC, USE W/SEALER #1052080) (8.971) (AC-DELCO #25522466)	93	F	1	25522466
14.	7-N20	7.242	PLATE, RR STAB SHF ANC	93	F	2	10015224
15.	7-C5	5.453	SPACER, DIFF DRV P/GR BRG (PART OF 16, 20) (.071-.058 THK)	93	F	AR	9785792
16.	7-C3	5.387	HOUSING KIT, R/AXL (INCLS 15, 25)	93	F	1	26030714
17.	7-C3	5.387	VENT, R/AXL	93	F	1	1236317
18.	7-C6	5.484	BEARING, DIFF DRV P/GR INR (INCLS CUP & CONE) (AC-DELCO #22510042)	93	F	1	22510042
19.	7-C5	5.460	SHIM KIT, DIFF DRV P/GR BRG (.046-.050)	93	F	1	26043990
	7-C5	5.460	SHIM KIT, DIFF DRV P/GR BRG (.025-.029)	93	F	AR	553022
	7-C5	5.460	SHIM KIT, DIFF DRV P/GR BRG (.030-.034)	93	F	AR	553023
	7-C5	5.460	SHIM KIT, DIFF DRV P/GR BRG (.035-.039)	93	F	AR	553024
	7-C5	5.460	SHIM KIT, DIFF DRV P/GR BRG (.040-.045)	93	F	AR	553025
	7-C5	5.460	SHIM KIT, DIFF DRV P/GR BRG (.020-.024)	93	F	AR	559755
	7-C5	5.460	SHIM KIT, DIFF DRV P/GR BRG (.040-.044 THK RANGE) (5.537)	93	F	AR	3995791
20.	7-C10	5.529	GEAR SET, DIFF RING & DRV PINION (INCLS 15, 25, 28)	93	F (GU2, G80, J65) (EXC J1F)	1	12471190
	7-C10	5.529	GEAR SET, DIFF RING & DRV PINION (INCLS 15, 25, 28)	93	F (GU5, G80, J65)	1	12471192

cardiagn.com

	7-C10	5.529	**GEAR SET**, DIFF RING & DRV PINION (INCLS 15, 25, 28)	93	F (GU5, G80, J65, J1F)	1	12471192
	7-C10	5.529	**GEAR SET**, DIFF RING & DRV PINION (INCLS 15, 25, 28)	93	F (GU5, J41) (EXC G80)	1	26046642
22.		N.S.	**CAP**, DIFF CARR BRG		.....		
24.	7-C11	5.537	**SHIM KIT**, DIFF BRG (.064-.070 THK RANGE)	93	F	AR	3853759
	7-C11	5.537	**SHIM KIT**, DIFF BRG (.072-.078 THK RANGE)	93	F	AR	3853760
	7-C11	5.537	**SHIM KIT**, DIFF BRG (.080-.086 THK RANGE)	93	F	AR	3853761
	7-C11	5.537	**SHIM KIT**, DIFF BRG (.088-.094 THK RANGE)	93	F	AR	3853762
	7-C11	5.537	**SHIM KIT**, DIFF BRG (.096-.100 THK RANGE)	93	F	AR	3853912
	7-C11	5.537	**SHIM KIT**, DIFF BRG (.052-.056 THK RANGE)	93	F	AR	3907088
	7-C11	5.537	**SHIM KIT**, DIFF BRG (.058-.063 THK RANGE)	93	F	AR	3907089
	7-C11	5.537	**SHIM KIT**, DIFF BRG (.040-.044 THK RANGE)	93	F	AR	3995791
	7-C11	5.537	**SHIM KIT**, DIFF BRG (.046-.050 THK RANGE)	93	F	AR	3995792
25.	7-C11	5.537	**SPACER**, DIFF BRG (PART OF 16, 20) (.170-.172 THK)	93	F	AR	9775809
26.	7-C6	5.506	**BOLT**, DIFF BRG CAP (.437-14X2.250 CL-2A) (CAD/ZC) (8.900)	93	F	4	454947
28.	7-C11	5.531	**BOLT**, DIFF R/GR (PART OF 33) (7/16-20 LH THD)	93	F	10	14066913
29.	7-C8	5.518	**BOLT**, DIFF P/GR SHF LK (*KIT1)	93	F (GU5)	1	14056196
32.	7-C11	5.536	**BEARING**, DIFF (SIDE) (INCLS CUP&CONE) (1 5/8 ID X 2 57/64 OD X 27/32 THK))	93	F	2	26051816
33.	7-C6	5.510	**CASE**, DIFF (INCLS DIFFERENTIAL) (INCLS 28, 35-40)	93	F (GU5, J41) (EXC G80)	1	26040375
	7-C6	5.510	**CASE**, DIFF (INCLS DIFFERENTIAL) (INCLS 28, 35-40)	93	F (GU5, J41, Y03) (EXC G80)	1	26040375
	7-C6	5.510	**CASE**, DIFF (W/INT GEARS) (INCLS DIFFERENTIAL) (INCLS 28, 35-40)	93	F (GU5, G80, J65)	1	26036755
	7-C6	5.510	**CASE**, DIFF (W/INT GEARS) (INCLS DIFFERENTIAL) (INCLS 28, 35-40)	93	F (GU2, G80, J65)	1	26036756
		N.S.	**DIFFERENTIAL**, (PART OF DIFFERENTIAL CASE)		.....		
34.	7-C6	5.508	**MAGNET**, R/AXL HSG CHIP COLLECTOR (PART OF 43) (1.75" DIA ROUND) (4.105) (AC-DELCO #3787240)	93	F	1	3787240
35.	7-C8	5.517	**SHAFT**, DIFF P/GR (*KIT1)	93	F (EXC G80)	2	26041321
		N.S.	**SHAFT**, DIFF P/GR (PART OF 33)		(Y03, G80)		
36.		N.S.	**GEAR**, DIFF PINION (*KIT1)		(Y03) (EXC G80)		
		N.S.	**GEAR**, DIFF PINION (PART OF 33)		(Y03, G80)		
37.		N.S.	**WASHER**, DIFF PIN THR (*KIT1) .		(Y03) (EXC G80)		

cardiagn.com

		N.S.	**WASHER**, DIFF PIN THR (PART OF 33)		(Y03, G80)		
38.	7-C12	5.543	**WASHER**, FRT DIFF SI GR THR (FINAL DRV) (2.720MM OD, 1.531 ID) (*KIT1)	93	F (J41)	2	344165
		N.S.	**WASHER**, FRT DIFF SI GR THR (PART OF 33)		(Y03, G80)		
39.	7-A13	4.710	**WHEEL**, RR WHL SPD SEN RELUCTOR (PART OF 33) (AC-DELCO #26014607)	93	F (GU2)	1	26014607
	7-A13	4.710	**WHEEL**, RR WHL SPD SEN RELUCTOR (PART OF 33) (AC-DELCO #26029185)	93	F (GU5)	1	26029185
40.		N.S.	**GEAR**, DIFF SI (*KIT1)		(Y03) (EXC G80)		
		N.S.	**GEAR**, DIFF SI (PART OF 33)		(Y03, G80)		
41.	7-C4	5.398	**BOLT**, HEX (HEX WA HD 5/16-18X7/8) (R/AXL HSG CVR)	93		AR	563592
43.	7-C4	5.398	**COVER**, R/AXL HSG (INCLS 34)	93	F	1	12471370
44.	7-C23	5.855	**BEARING**, RR WHL (AC-DELCO #RW204)	93	F	2	9428573
45.	7-C4	5.399	**GASKET**, R/AXL HSG CVR	93	F	1	26016661
46.	7-B13	5.001	**PLATE**, RR BRK BKG	93	F (J41)	RH	18012021
	7-B13	5.001	**PLATE**, RR BRK BKG	93	F (J41)	LH	18012022
47.		8.915	**NUT**, HEX .375-16X21/64 301M ZC (RR BRK BKG PLT)	93		8	9414034
	7-B13	5.001	**WASHER**, RR BRK BKG PLT (9.5 X 2 BRK) (5.056)	93	F (Y03, GU5, J41) (EXC G80)	8	15661086
48.	7-B14	5.002	**BOLT**, RR BRK BKG PLT (RR BRK BKG PLT) (HAS COATING)	93	F	8	26037140
49.	7-C23	5.822	**SEAL**, RR WHL BRG	93	F	2	26029139
54.	7-C5	5.422	**LOCK**, R/AXL SHF	93	F	2	344171
58.	7-C20	5.809	**DRUM**, RR BRK (9.5 X 2 BRKS) (AC-DELCO #177-366)	93	F (J41)	2	18018680
	7-C20	5.809	**DRUM**, RR BRK (5-4 3/4 HOLES & BOLT CIRCLE) (9 1/2 D.D. X 2 WIDTH SHOE SIZE) (AC-DELCO #18B201)	93	FP	AR	18028514
59.		N.S.	**BRAKE**, RR (SEE "BRAKE ASM/REAR DRUM" ILLUSTRATION IN GRP. 5.000 FOR DETAILED VIEW.)				
60.		8.921	**RETAINER**, PUSH ON BOLT M12X1.75 PC	93		AR	11502737
61.	7-C22	5.812	**BOLT**, RR WHL (GREEN) (M12X1.5X34MM) (SERRATED SHLDR)	93	F	10	9591981
63.	7-C4	5.420	**SHAFT**, R/AXL	93	F (GU5, J41) (EXC G80)	2	26063146
65.	7-B13	5.001	**PLATE**, RR BRK CLPR MT (ON AXLE)	93	F (J65)	LH	18019857
	7-B13	5.001	**PLATE**, RR BRK CLPR MT (ON AXLE)	93	F (J65)	RH	18019858
66.	7-A7	4.665	**BOLT**, RR BRK CLPR (M12-1.75 X 33.1) (AC-DELCO #18K203)	93	FP	AR	18034577
	7-A7	4.665	**BOLT**, RR BRK CLPR (M12-1.75 X 33.1) (M12-1.75 X 33.1)	93	F (J65)	4	10229606
	7-A7	4.665	**BOLT**, RR BRK CLPR (ANCHOR PLATE & BRK) (M12-1.75 X 33.1)	93	F (J65)	2	10112649

cardiagn.com

	7-A7	4.665	**BOLT**, RR BRK CLPR (GDE PIN) (M12-1.75 X 33.1)	93	F (J65)	4	14067559
67.	7-B13	5.001	**SHIM**, RR BRK CLPR MT PLT	93	F	1	26034667
68.		8.915	**NUT**, HEX .375-16X21/64 301M ZC (RR BRK BKG PLT)	93		8	9414034
69.		N.S.	**CALIPER**, RR BRK (SEE "BRAKE CALIPER/REAR" ILLUSTRATION IN GRP. 4.000 FOR DETAILED VIEW.)				
70.	7-C4	5.420	**SHAFT**, R/AXL	93	F (J65, G80)	2	26027588
71.	7-C20	5.809	**ROTOR**, RR BRK (AC-DELCO #18A624)	93	F (GU2, GU5, G80, J65)	2	18028224
	7-C20	5.809	**ROTOR**, RR BRK (AC-DELCO #18A1060)	93	FP	LH	18039644
	7-C20	5.809	**ROTOR**, RR BRK (AC-DELCO #18A1061)	93	FP	RH	18039645
72.		8.900	**BOLT-HEX**, .375X16.00X1.250 PX (RR BRK BKG PLT)	93	F	8	9440954
73.	7-A13	4.710	**BOLT**, RR WHL SPD SEN (M6X1X15) (8.900) (AC-DELCO #8639743) (TO DIFF)	93	F	1	8639743
75.	7-A13	4.710	**SENSOR**, WHL SPD (RR) (AC-DELCO #10456115)	93	F	1	10456115

SERVICE KITS

1.	7-C8	5.526	**GEAR KIT**, DIFF PINION (INCLS 29, 35-38, 40)	93	F (GU5, J41, Y03) (EXC G80)	1	31022708

RPO DEFINITIONS

GU2 – AXLE,REAR,2.73 RATIO
GU5 – AXLE,REAR,3.23 RATIO
G80 – AXLE,REAR,POSITRACTION,LIMITED SLIP
J1F – BRAKE,SPECIAL(EXPORT)
J41 – BRAKE SYSTEM,POWER,FRONT DISC,REAR DRUM(CAST IRON)
J65 – BRAKE SYSTEM,POWER,FRONT AND REAR DISC
Y03 – 7.625 DIAMETER RING GEAR,SAGINAW REAR AXLE

cardiagn.com

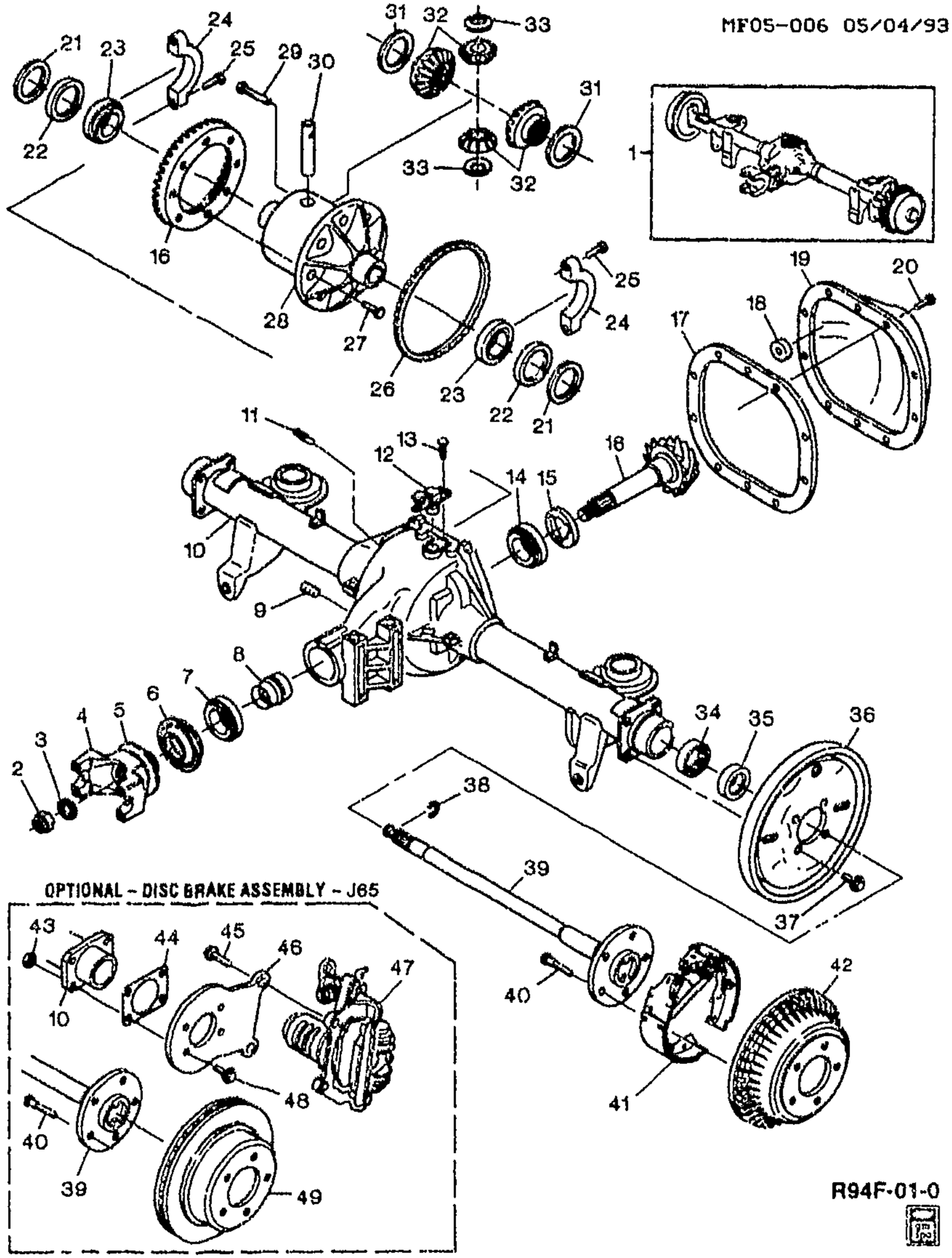

1994 F AXLE ASM/REAR
1995-1997 F AXLE ASM/REAR (EXC NW9)

1.	DISCON	AXLE, RR (2.73 RATIO) (CODE 4PG, 7PG) (1994 AXLE SERVICED BY COMPONENTS ONLY)	95 F (GU2, G80, J65) (EXC NW9, VE2)	1	12558029

cardiagn.com

			DISCON	AXLE, RR (2.73 RATIO) (CODE 7PG) (1994 AXLE SERVICED BY COMPONENTS ONLY)	96	F (GU2, G80, J65) (EXC NW9, VE2)	1 12558029
			DISCON	AXLE, RR (3.23 RATIO) (CODE 9HM)	94	F (GU5, J41) (EXC G80)	1 26038881
			DISCON	AXLE, RR (3.23 RATIO) (CODE 9PF, 9PD, 9PB)	94	F (GU5, G80, J65) (EXC J1F)	1 26041287
			DISCON	AXLE, RR (3.23 RATIO) (CODE 9HM)	95	F (GU5, J41) (EXC G80, NW9, VE2)	1 26038881
			DISCON	AXLE, RR (3.23 RATIO) (CODE 7HM)	96-97	F (L36, GU5, J41) (EXC G80, NW9, VE2)	1 12558026
			DISCON	AXLE, RR (3.23 RATIO) (PAINTED FOR EXPORT)	96	F (GU5, G80, J65, VE2) (EXC NW9)	1 12558032
			DISCON	AXLE, RR (3.23 RATIO) (PAINTED FOR EXPORT)	96	F (LT1, GU5, G80, J65) (EXC NW9, VE2)	1 12558032
			DISCON	AXLE, RR (3.23 RATIO) (PAINTED FOR EXPORT)	97	F (LT1, L36, GU5, G80, J65) (EXC NW9, VE2)	1 12558032
			DISCON	AXLE, RR (3.23 RATIO) (CODE 9PM, 9PP, 7PM) (PAINTED FOR EXPORT)	95	F (GU5, G80, J65, VE2)	1 12558032
			DISCON	AXLE, RR (2.73 RATIO) (1994 AXLE SERVICED BY COMPONENTS ONLY) (CODE 2PH, 9PH)	95	F (GU2, G80, J65, VE2) (EXPORT)	1 26044492
			DISCON	AXLE, RR (3.23 RATIO) (PAINTED FOR EXPORT)	97	F (LT1, L36, GU5, G80, J65, VE2) (EXC NW9) (EXPORT)	1 12558032
			DISCON	AXLE, RR (3.23 RATIO) (CODE 9PM, 9PP) (PAINTED FOR EXPORT)	94	F (GU5, G80, J1F, J65) (EXPORT)	1 12558032
2.	7-C17	5.595		NUT, DIFF DRV P/GR (7/8-14 X 11/16)	94-97	F	2 9783762
3.	7-C17	5.595		WASHER, DIFF DRV P/GR (57/64 X 1 5/8 X 3/16)	94-97	F	1 517900
4.	7-C15	5.545		YOKE, DIFF DRV P/GR (27 TEETH) (INCLS DEFLECTOR)	94-97	F	1 7827670
5.		N.S.		DEFLECTOR, DIFF DRV P/GR DIRT			
6.	7-C6	5.469		SEAL, DIFF DRV P/GR	94-97	F	1 26026792
7.	7-C5	5.447		BEARING, DIFF DRV P/GR OTR (INCLS CUP & CONE) (TIMKEN M-86649-M-86610) (AC-DELCO #S9)	94-97	F	1 9417784
8.	7-C5	5.453		SPACER, DIFF DRV P/GR BRG (PART OF 10, 16) (.071-.058 THK)	94-97	F	AR 9785792
9.		8.971		PLUG, 1/2-14 X 39/64 (AC-DELCO #25522466)	94-97		AR 25522466
10.	7-C3	5.387		HOUSING KIT, R/AXL (INCLS 8, 22)	94	F	1 26030714
	7-C3	5.387		HOUSING KIT, R/AXL (INCLS 8, 22)	95-97	F (EXC NW9)	1 26030714
11.	7-C3	5.387		VENT, R/AXL	94-97	F	1 1236317
12.	7-A13	4.710		SENSOR, WHL SPD (RR) (AC-DELCO #10456115)	94	F	1 10456115
	7-A13	4.710		SENSOR, WHL SPD (RR) (AC-DELCO #10456115)	95-97	F (EXC NW9)	1 10456115

cardiagn.com

13.	7-A13	4.710	**BOLT**, RR WHL SPD SEN (M6X1X15) (8.900) (AC-DELCO #8639743) (TO DIFF)	94-97	F	1	8639743
14.	7-C6	5.484	**BEARING**, DIFF DRV P/GR INR (INCLS CUP & CONE) (AC-DELCO #22510042)	94-97	F	1	22510042
15.	7-C5	5.460	**SHIM KIT**, DIFF DRV P/GR BRG (.046-.050)	94-97	F	1	26043990
	7-C5	5.460	**SHIM KIT**, DIFF DRV P/GR BRG (.025-.029)	94-97	F	AR	553022
	7-C5	5.460	**SHIM KIT**, DIFF DRV P/GR BRG (.030-.034)	94-97	F	AR	553023
	7-C5	5.460	**SHIM KIT**, DIFF DRV P/GR BRG (.035-.039)	94-97	F	AR	553024
	7-C5	5.460	**SHIM KIT**, DIFF DRV P/GR BRG (.040-.045)	94-97	F	AR	553025
	7-C5	5.460	**SHIM KIT**, DIFF DRV P/GR BRG (.020-.024)	94-97	F	AR	559755
	7-C5	5.460	**SHIM KIT**, DIFF DRV P/GR BRG (.040-.044 THK RANGE) (5.537)	94-95	F	AR	3995791
16.	7-C10	5.529	**GEAR SET**, DIFF RING & DRV PINION (INCLS 8, 22)	94-97	F (GU5, G80, J65)	1	12471192
	7-C10	5.529	**GEAR SET**, DIFF RING & DRV PINION (INCLS 8, 22)	94	F (GU5, J41) (EXC G80)	1	26046642
	7-C10	5.529	**GEAR SET**, DIFF RING & DRV PINION (INCLS 8, 22)	94-96	F (GU2, G80, J65)	1	12471190
	7-C10	5.529	**GEAR SET**, DIFF RING & DRV PINION (INCLS 8, 22)	94	F (GU6, G80, J65) (EXC J1F)	1	12471191
	7-C10	5.529	**GEAR SET**, DIFF RING & DRV PINION (INCLS 8, 22)	95	F (GU6, G80, J65) (EXC VE2)	1	12471191
	7-C10	5.529	**GEAR SET**, DIFF RING & DRV PINION (INCLS 8, 22)	96	F (LT1, GU6, G80, J65)	1	12471191
	7-C10	5.529	**GEAR SET**, DIFF RING & DRV PINION (INCLS 8, 22)	96	F (L36, GU6, G80, J65, VE2) (EXC NW9)	1	12471191
	7-C10	5.529	**GEAR SET**, DIFF RING & DRV PINION (INCLS 8, 22) (INCLS BOLTS, PINION, RING & SPACERS)	96-97	F (GU4, J41) (EXC G80, NW9, VE2)	1	26029417
	7-C10	5.529	**GEAR SET**, DIFF RING & DRV PINION (INCLS 8, 22) (INCLS BOLTS, PINION, RING & SPACERS)	96-97	F (L36, GU6, J41) (EXC NW9)	1	26029418
	7-C10	5.529	**GEAR SET**, DIFF RING & DRV PINION (INCLS 8, 22)	97	F (LT1, GU2)	1	12471190
	7-C10	5.529	**GEAR SET**, DIFF RING & DRV PINION (INCLS 8, 22)	97	F (GU6, G80, J65)	1	12471191
	7-C10	5.529	**GEAR SET**, DIFF RING & DRV PINION (R/AXL) (INCLS 8, 22) (INCLS BOLTS, PINION, RING & SPACERS)	95	F (L36, GU6, J41) (EXC G80, NW9)	1	26029418
	7-C10	5.529	**GEAR SET**, DIFF RING & DRV PINION (W/O DIFF BRG SPCR) (INCLS 8, 22)	95-97	F (GU5, J41) (EXC G80, NW9)	1	26046642
17.	7-C4	5.399	**GASKET**, R/AXL HSG CVR	94-97	F	1	26016661
18.	7-C6	5.508	**MAGNET**, R/AXL HSG CHIP COLLECTOR (PART OF 19) (1.75" DIA ROUND) (4.105) (AC-DELCO #3787240)	94-97	F	1	3787240

cardiagn.com

19.	7-C4	5.398	**COVER**, R/AXL HSG (INCLS 18)	94-97	F	1	12471370
20.	7-C4	5.398	**BOLT**, HEX (HEX WA HD 5/16-18X7/8) (R/AXL HSG CVR)	94-97		AR	563592
21.	7-C11	5.537	**SHIM KIT**, DIFF BRG (.064-.070 THK RANGE)	94-97	F	AR	3853759
	7-C11	5.537	**SHIM KIT**, DIFF BRG (.072-.078 THK RANGE)	94-97	F	AR	3853760
	7-C11	5.537	**SHIM KIT**, DIFF BRG (.080-.086 THK RANGE)	94-97	F	AR	3853761
	7-C11	5.537	**SHIM KIT**, DIFF BRG (.088-.094 THK RANGE)	94-97	F	AR	3853762
	7-C11	5.537	**SHIM KIT**, DIFF BRG (.096-.100 THK RANGE)	94-97	F	AR	3853912
	7-C11	5.537	**SHIM KIT**, DIFF BRG (.052-.056 THK RANGE)	94-97	F	AR	3907088
	7-C11	5.537	**SHIM KIT**, DIFF BRG (.058-.063 THK RANGE)	94-97	F	AR	3907089
	7-C11	5.537	**SHIM KIT**, DIFF BRG (.040-.044 THK RANGE)	94-97	F	AR	3995791
	7-C11	5.537	**SHIM KIT**, DIFF BRG (.046-.050 THK RANGE)	94-97	F	AR	3995792
22.	7-C11	5.537	**SPACER**, DIFF BRG (PART OF 10, 16) (.170-.172 THK)	94-97	F	AR	9775809
23.	7-C11	5.536	**BEARING**, DIFF (SIDE) (INCLS CUP&CONE) (1 5/8 ID X 2 57/64 OD X 27/32 THK))	94-97	F	2	26051816
24.		N.S.	**CAP**, DIFF CARR BRG				
25.	7-C6	5.506	**BOLT**, DIFF BRG CAP (.437-14X2.250 CL-2A) (CAD/ZC) (8.900)	94-96	F	4	454947
		8.900	**BOLT**, HEX .437-14X2.250 CL-2A CAD/ZC (DIFF BRG CAP)	97		AR	454947
26.	7-A13	4.710	**WHEEL**, RR WHL SPD SEN RELUCTOR (AC-DELCO #26014607)	94-95	F (GU2)	1	26014607
	7-A13	4.710	**WHEEL**, RR WHL SPD SEN RELUCTOR (AC-DELCO #26029185)	94-96	F (GU5, GU6)	1	26029185
	7-A13	4.710	**WHEEL**, RR WHL SPD SEN RELUCTOR (AC-DELCO #26014607)	96	F (GU2, GU4)	1	26014607
	7-A13	4.710	**WHEEL**, RR WHL SPD SEN RELUCTOR (AC-DELCO #26014607)	97	F (GU4, GU2)	1	26014607
	7-A13	4.710	**WHEEL**, RR WHL SPD SEN RELUCTOR (AC-DELCO #26029185)	97	F (GU5, GU6) (EXC NW9)	1	26029185
27.	7-C11	5.531	**BOLT**, DIFF R/GR (PART OF 28) (7/16-20 LH THD)	94-97	F	10	14066913
28.	7-C6	5.510	**CASE**, DIFF (INCLS 27)	94	F (GU5, J41) (EXC G80)	1	26040375
	7-C6	5.510	**CASE**, DIFF (INCLS 27)	95	F (GU5, GU6, J41) (EXC G80, NW9, VE2)	1	26040375
	7-C6	5.510	**CASE**, DIFF (INCLS 27) (STAMPED 3443)	96	F (L36, GU6, J41) (EXC NW9)	1	26033477
	7-C6	5.510	**CASE**, DIFF (INCLS 27)	96-97	F (L36, GU5, GU6, J41) (EXC G80, NW9, VE2)	1	26040375
	7-C6	5.510	**CASE**, DIFF (INCLS 27)	96-97	F (L36, GU4, J41) (EXC G80, NW9, VE2)	1	26047672

cardiagn.com

	7-C6	5.510	CASE, DIFF (INCLS 27) (STAMPED 3443)	97	F (GU5, GU6, J41) (EXC G80)	1	26033477
	7-C6	5.510	CASE, DIFF (LESS INT GEARS) (INCLS 27) (STAMPED 3444)	97	F (L36, GU4, J41) (EXC G80)	1	26033478
	7-C6	5.510	CASE, DIFF (W/INT GEARS) (INCLS 27)	94-97	F (GU2, G80, J65)	1	26036756
	7-C6	5.510	CASE, DIFF (W/INT GEARS) (INCLS 27)	94-97	F (GU5, GU6, G80, J65)	1	26036755
		N.S.	DIFFERENTIAL,				
29.	7-C8	5.518	BOLT, DIFF P/GR SHF LK (*KIT1)	94-97	F	1	14056196
30.	7-C8	5.517	SHAFT, DIFF P/GR (*KIT1)	94	F (GU5, J41) (EXC G80)	2	26041321
	7-C8	5.517	SHAFT, DIFF P/GR (*KIT1)	95	F (GU5, J41) (EXC G80, NW9, VE2)	2	26041321
	7-C8	5.517	SHAFT, DIFF P/GR (*KIT1)	95	F (L36, GU6, J41) (EXC G80, NW9)	2	26041321
	7-C8	5.517	SHAFT, DIFF P/GR (*KIT1)	97	F (L36, GU4, GU5, GU6) (EXC G80, NW9)	2	26041321
	7-C8	5.517	SHAFT, DIFF P/GR (R/AXL) (*KIT1)	96	F (L36, GU4, GU5, GU6) (EXC G80, NW9)	1	26041321
31.		N.S.	WASHER, FRT DIFF SI GR THR (*KIT1)				
32.		N.S.	GEAR, DIFF PINION				
33.		N.S.	WASHER, DIFF PIN THR (*KIT1)				
34.	7-C23	5.855	BEARING, RR WHL (AC-DELCO #RW204)	94-97	F	2	9428573
35.	7-C23	5.822	SEAL, RR WHL BRG	94-97	F	2	26029139
36.	7-B13	5.001	PLATE, RR BRK BKG	94-95	F (J41)	RH	18012021
	7-B13	5.001	PLATE, RR BRK BKG	94-95	F (J41)	LH	18012022
	7-B13	5.001	PLATE, RR BRK BKG	96-97	F (L36, GU4, GU5, GU6, J41) (EXC G80, NW9)	RH	18012021
	7-B13	5.001	PLATE, RR BRK BKG	96-97	F (L36, GU4, GU5, GU6, J41) (EXC G80, NW9)	LH	18012022
37.	7-B14	5.002	BOLT, RR BRK BKG PLT (RR BRK BKG PLT) (HAS COATING)	94-97	F	8	26037140
		8.917	NUT-METRIC ALL METAL DIRECTIONAL PREVAILING TORQUE TENSION HEX, M8X1.25X25 13MM SOCKET	94-97		AR	11515752
38.	7-C5	5.422	LOCK, R/AXL SHF	94-97	F	2	344171
39.	7-C4	5.420	SHAFT, R/AXL	94	F (J41)	2	26063146
	7-C4	5.420	SHAFT, R/AXL	95	F (GU5, GU6, J41) (EXC G80, NW9)	2	26063146
	7-C4	5.420	SHAFT, R/AXL	96	F (L36, GU4, GU5, GU6, J41) (EXC G80, NW9)	2	26063146
	7-C4	5.420	SHAFT, R/AXL	97	F (LT1) (EXC NW9)	2	26063146
	7-C4	5.420	SHAFT, R/AXL	97	F (L36) (EXC NW9)	2	26063146
40.	7-C22	5.812	BOLT, RR WHL (GREEN) (M12X1.5X34MM) (SERRATED SHLDR)	94-97	F	10	9591981
		8.921	RETAINER, PUSH ON BOLT M12X1.75 PC	94-97		AR	11502737
41.		N.S.	BRAKE, RR (SEE "BRAKE ASM/REAR DRUM" ILLUSTRATION IN GRP. 5.000 FOR DETAILED VIEW.)				

cardiagn.com

42.	7-C20	5.809	**DRUM**, RR BRK (9.5 X 2 BRKS) (AC-DELCO #177-366)	94	F (J41)	2	18018680
	7-C20	5.809	**DRUM**, RR BRK (9.5 X 2 BRKS) (AC-DELCO #177-366)	95	F (J41) (EXC G80, NW9)	2	18018680
	7-C20	5.809	**DRUM**, RR BRK (9.5 X 2 BRKS) (AC-DELCO #177-366)	96-97	F (L36, GU4, GU5, GU6, J41) (EXC G80, NW9)	2	18018680
	7-C20	5.809	**DRUM**, RR BRK (5-4 3/4 HOLES & BOLT CIRCLE) (9 1/2 D.D. X 2 WIDTH SHOE SIZE) (AC-DELCO #18B201)	94-97	FP	AR	18028514
43.		8.915	**NUT**, HEX .375-16X21/64 301M ZC (RR BRK BKG PLT)	94-97	.....	8	9414034
44.	7-B13	5.001	**SHIM**, RR BRK CLPR MT PLT	94-97	F	1	26034667
45.	7-A7	4.665	**BOLT**, RR BRK CLPR (AC-DELCO #18K203)	94-97	FP	AR	18034577
	7-A7	4.665	**BOLT**, RR BRK CLPR (M12-1.75 X 33.1)	94-97	F (J65)	4	10229606
	7-A7	4.665	**BOLT**, RR BRK CLPR (ANCHOR PLATE & BRK)	94-97	F (J65)	2	10112649
	7-A7	4.665	**BOLT**, RR BRK CLPR (GDE PIN) .	94-97	F (J65)	4	14067559
46.	7-B13	5.001	**PLATE**, RR BRK CLPR MT (ON AXLE)	94	F (J65)	LH	18019857
	7-B13	5.001	**PLATE**, RR BRK CLPR MT (ON AXLE)	95-97	F (J65) (EXC NW9)	LH	18019857
	7-B13	5.001	**PLATE**, RR BRK CLPR MT (ON AXLE)	94	F (J65)	RH	18019858
	7-B13	5.001	**PLATE**, RR BRK CLPR MT (ON AXLE)	95-97	F (J65) (EXC NW9)	RH	18019858
47.	7-A7	4.665	**CALIPER**, RR BRK (SEE "BRAKE CALIPER/REAR" ILLUSTRATION IN GRP. 4.000 FOR DETAILED VIEW.) (AC-DELCO #172-2109)	94-97	F (J65)	LH	18021198
	7-A7	4.665	**CALIPER**, RR BRK (SEE "BRAKE CALIPER/REAR" ILLUSTRATION IN GRP. 4.000 FOR DETAILED VIEW.) (AC-DELCO #172-2110)	94-97	F (J65)	RH	18021199
48.		8.900	**BOLT-HEX**, .375X16.00X1.250 PX (RR BRK BKG PLT)	94-97	.....	8	9440954
49.	7-C20	5.809	**ROTOR**, RR BRK (AC-DELCO #18A1060)	94-95	FP	LH	18039644
	7-C20	5.809	**ROTOR**, RR BRK (AC-DELCO #18A1061)	94-95	FP	RH	18039645
	7-C20	5.809	**ROTOR**, RR BRK (AC-DELCO #18A624)	94	F (GU2, G80, J65)	2	18028224
	7-C20	5.809	**ROTOR**, RR BRK (AC-DELCO #18A624)	94	F (GU5, GU6, G80, J65) (EXC J1F)	2	18028224
	7-C20	5.809	**ROTOR**, RR BRK (AC-DELCO #18A624)	95	F (GU2, GU5, G80, J65)	2	18028224
	7-C20	5.809	**ROTOR**, RR BRK (AC-DELCO #18A624)	96	F (GU2, G80, J65) (EXC VE2)	2	18028224
	7-C20	5.809	**ROTOR**, RR BRK (AC-DELCO #18A624)	96	F (LT1, GU5, G80, J65) .	2	18028224
	7-C20	5.809	**ROTOR**, RR BRK (AC-DELCO #18A624)	96	F (L36, GU5, G80, J65, VE2) (EXC NW9)	2	18028224
	7-C20	5.809	**ROTOR**, RR BRK (AC-DELCO #18A624)	97	F (GU2, G80, J65, GU6) (EXC VE2)	2	18028224

cardiagn.com

7-C20	5.809	ROTOR, RR BRK (AC-DELCO #18A624)	97	F (LT1, GU5, G80, J65, GU6)	2	18028224
7-C20	5.809	ROTOR, RR BRK (AC-DELCO #18A624)	97	F (L36, GU5, G80, J65, VE2, GU6) (EXC NW9) .	2	18028224
7-C20	5.809	ROTOR, RR BRK (AC-DELCO #177-827)	94	F (B71, GU5, GU6, G80, J1F, J65) (EXPORT)	2	18022019

SERVICE KITS

1. 7-C8	5.526	GEAR KIT, DIFF PINION (INCLS 29-31, 33)	94	F (GU5, J41, Y03) (EXC G80)	1	31022708
7-C8	5.526	GEAR KIT, DIFF PINION (INCLS 29-31, 33)	95-97	F (J41, Y03) (EXC G80)	1	31022708
7-C9	5.527	GEAR KIT, DIFF PINION (INCLS 29-31, 33) (5.526)	95	F (J41, Y03) (EXC G80)	1	31022708
7-C9	5.527	GEAR KIT, DIFF PINION (INCLS 29-31, 33) (5.526)	96-97	F (L36, GU4, GU5, GU6, J41) (EXC G80, NW9)	1	31022708

RPO DEFINITIONS

B71 – ORNAMENTATION,EXTERIOR,WHEEL OPENING MOLDING(BLACK)
GU2 – AXLE,REAR,2.73 RATIO
GU4 – AXLE,REAR,3.08 RATIO
GU5 – AXLE,REAR,3.23 RATIO
GU6 – AXLE,REAR,3.42 RATIO
G80 – AXLE,REAR,POSITRACTION,LIMITED SLIP
J1F – BRAKE,SPECIAL(EXPORT)
J41 – BRAKE SYSTEM,POWER,FRONT DISC,REAR DRUM(CAST IRON)
J65 – BRAKE SYSTEM,POWER,FRONT AND REAR DISC
LT1 – ENGINE-GAS, 8 CYL, 5.7L(5.7P),MFI,HO
L36 – ENGINE GAS, 6 CYL, 3.8K, MFI, V6, HO (ERV6 SERIES)
NW9 – TRACTION CONTROL ELECTRONIC
VE2 – PROTECTOR SOURCE APPLIED
Y03 – 7.625 DIAMETER RING GEAR,SAGINAW REAR AXLE

cardiagn.com

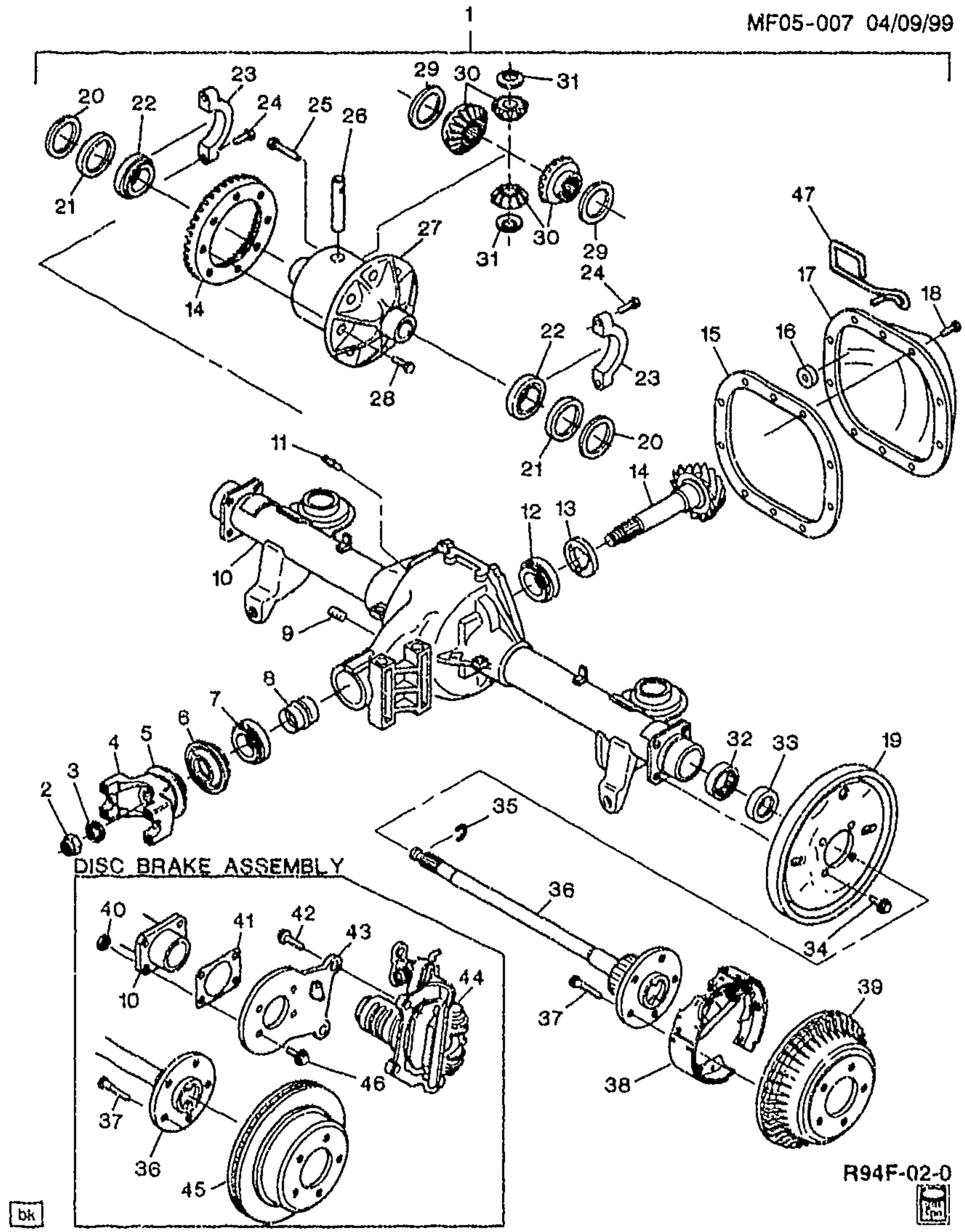

MF05-007

1995-1997 F AXLE ASM/REAR (NW9)

1.	DISCON	AXLE, RR (2.73 RATIO) (PAINTED FOR EXPORT) (CODE 7PC) (EXCEPT CALIPERS)	95-97	F (GU2, G80, J65, NW9) (EXC VE2)	1	12558034
	DISCON	AXLE, RR (3.23 RATIO) (CODE 4PB, 7PB)	95	F (GU5, G80, J65, NW9) (EXC VE2)	1	12558036

cardiagn.com

		DISCON	AXLE, RR (3.23 RATIO) (CODE 7PB)	96	F (GU5, G80, J65, NW9) (EXC VE2)	1	12558036
		DISCON	AXLE, RR (3.23 RATIO) (CODE 7PB)	97	F (LT1, GU5, G80, J65, NW9) (EXC VE2)	1	12558036
		DISCON	AXLE, RR (3.23 RATIO) (CODE 9PM, 9PP, 7PM) (PAINTED FOR EXPORT)	95	F (GU5, G80, J65, VE2)	1	12558032
		DISCON	AXLE, RR (3.42 RATIO) (CODE 4PE, 7PE)	95	F (GU6, G80, J65, NW9) (EXC VE2)	1	12558037
		DISCON	AXLE, RR (3.42 RATIO) (CODE 7PE)	96-97	F (GU6, G80, J65, NW9) (EXC VE2)	1	12558037
		DISCON	AXLE, RR (2.73 RATIO) (CODE 2PH, 9PH)	95	F (GU2, G80, J65, VE2) (EXPORT)	1	26044492
		DISCON	AXLE, RR (2.73 RATIO) (PAINTED FOR EXPORT) (CODE 7PC) (EXCEPT CALIPERS)	96-97	F (LT1, GU2, G80, J65, NW9, VE2) (EXPORT)	1	12558034
2.	7-C17	5.595	NUT, DIFF DRV P/GR (7/8-14 X 11/16)	95-97	F	2	9783762
3.	7-C17	5.595	WASHER, DIFF DRV P/GR (57/64 X 1 5/8 X 3/16)	95-97	F	1	517900
4.	7-C15	5.545	YOKE, DIFF DRV P/GR (27 TEETH) (INCLS DEFLECTOR)	95-97	F	1	7827670
5.		N.S.	DEFLECTOR, DIFF DRV P/GR DIRT				
6.	7-C6	5.469	SEAL, DIFF DRV P/GR	95-97	F	1	25026792
7.	7-C5	5.447	BEARING, DIFF DRV P/GR OTR (INCLS CUP & CONE) (TIMKEN M-86649-M-86610) (AC-DELCO #S9)	95-97	F	1	9417784
8.	7-C5	5.453	SPACER, DIFF DRV P/GR BRG (PART OF 10, 14) (.071-.058 THK)	95-97	F	AR	9785792
9.		8.971	PLUG, 1/2-14 X 39/64 (DIFF CARR FILL) (AC-DELCO #25522466)	95-97		1	25522466
10.	7-C3	5.387	HOUSING KIT, R/AXL (INCLS 8, 21)	95-97	F (NW9)	1	26038491
11.	7-C3	5.387	VENT, R/AXL	95-97	F	1	1236317
12.	7-C6	5.484	BEARING, DIFF DRV P/GR INR (INCLS CUP & CONE) (AC-DELCO #22510042)	95-97	F	1	22510042
13.	7-C5	5.460	SHIM KIT, DIFF DRV P/GR BRG (.046-.050)	95-97	F	1	26043990
	7-C5	5.460	SHIM KIT, DIFF DRV P/GR BRG (.025-.029)	95-97	F	AR	553022
	7-C5	5.460	SHIM KIT, DIFF DRV P/GR BRG (.030-.034)	95-97	F	AR	553023
	7-C5	5.460	SHIM KIT, DIFF DRV P/GR BRG (.035-.039)	95-97	F	AR	553024
	7-C5	5.460	SHIM KIT, DIFF DRV P/GR BRG (.040-.045)	95-97	F	AR	553025
	7-C5	5.460	SHIM KIT, DIFF DRV P/GR BRG (.020-.024)	95-97	F	AR	559755
	7-C5	5.460	SHIM KIT, DIFF DRV P/GR BRG (.040-.044 THK RANGE) (5.537)	95	F	AR	3995791
14.	7-C10	5.529	GEAR SET, DIFF RING & DRV PINION (INCLS 8, 21)	95-97	F (GU5, G80, J65)	1	12471192

cardiagn.com

	7-C10	5.529	**GEAR SET**, DIFF RING & DRV PINION (INCLS 8, 21)	95-96	F (GU2, G80, J65)	1	12471190
	7-C10	5.529	**GEAR SET**, DIFF RING & DRV PINION (INCLS 8, 21)	95	F (GU6, G80, J65) (EXC VE2)	1	12471191
	7-C10	5.529	**GEAR SET**, DIFF RING & DRV PINION (INCLS 8, 21)	96	F (LT1, GU6, G80, J65)	1	12471191
	7-C10	5.529	**GEAR SET**, DIFF RING & DRV PINION (INCLS 8, 21)	97	F (LT1, GU2)	1	12471190
	7-C10	5.529	**GEAR SET**, DIFF RING & DRV PINION (INCLS 8, 21)	97	F (GU6, G80, J65)	1	12471191
15.	7-C4	5.399	**GASKET**, R/AXL HSG CVR	95-97	F	1	26016661
16.	7-C6	5.508	**MAGNET**, R/AXL HSG CHIP COLLECTOR (PART OF 17) (1.75" DIA ROUND) (4.105) (AC-DELCO #3787240)	95-97	F	1	3787240
17.	7-C4	5.398	**COVER**, R/AXL HSG (INCL 16)	95-97	F	1	12471370
18.	7-C4	5.398	**BOLT**, HEX (HEX WA HD 5/16-18X7/8) (R/AXL HSG CVR)	95-97		8	563592
	7-C4	5.398	**BOLT**, R/AXL HSG CVR (HEX 5/16-18 X 1 7/16) (7.242)			2	458985
19.		N.S.	**PLATE**, RR BRK BKG				
		N.S.	**WASHER**, RR BRK BKG PLT				
20.	7-C11	5.537	**SHIM KIT**, DIFF BRG (.064-.070 THK RANGE)	95-97	F	AR	3853759
	7-C11	5.537	**SHIM KIT**, DIFF BRG (.072-.078 THK RANGE)	95-97	F	AR	3853760
	7-C11	5.537	**SHIM KIT**, DIFF BRG (.080-.086 THK RANGE)	95-97	F	AR	3853761
	7-C11	5.537	**SHIM KIT**, DIFF BRG (.088-.094 THK RANGE)	95-97	F	AR	3853762
	7-C11	5.537	**SHIM KIT**, DIFF BRG (.096-.100 THK RANGE)	95-97	F	AR	3853912
	7-C11	5.537	**SHIM KIT**, DIFF BRG (.052-.056 THK RANGE)	95-97	F	AR	3907088
	7-C11	5.537	**SHIM KIT**, DIFF BRG (.058-.063 THK RANGE)	95-97	F	AR	3907089
	7-C11	5.537	**SHIM KIT**, DIFF BRG (.040-.044 THK RANGE)	95-97	F	AR	3995791
	7-C11	5.537	**SHIM KIT**, DIFF BRG (.046-.050 THK RANGE)	95-97	F	AR	3995792
21.	7-C11	5.537	**SPACER**, DIFF BRG (PART OF 10, 14) (.170-.172 THK)	95-97	F	AR	9775809
22.	7-C11	5.536	**BEARING**, DIFF (SIDE) (INCLS CUP&CONE) (1 5/8 ID X 2 57/64 OD X 27/32 THK))	95-97	F	2	26051816
23.		N.S.	**CAP**, DIFF CARR BRG				
24.	7-C6	5.506	**BOLT**, DIFF BRG CAP (.437-14X2.250 CL-2A) (CAD/ZC) (8.900)	95-96	F	4	454947
		8.900	**BOLT**, HEX .437-14X2 250 CL-2A CAD/ZC (DIFF BRG CAP)	95-97		AR	454947
25.	7-C8	5.516	**BOLT**, DIFF P/GR SHF LK (PART OF 27)	95-97	F	1	14056196
26.	7-C8	5.517	**SHAFT**, DIFF P/GR (PART OF 27)	95-97	F	1	26041321
27.	7-C6	5.510	**CASE**, DIFF (INCLS 25, 26, 28-31) (STAMPED 3443)	97	F (GU5, GU6, J41) (EXC G80)	1	26033477

cardiagn.com

	7-C6	5.510	CASE, DIFF (LESS INT GEARS) (INCLS 25, 26, 28-31) (STAMPED 3444)	97	F (L36, GU4, J41) (EXC G80)	1	26033478
	7-C6	5.510	CASE, DIFF (W/INT GEARS) (INCLS 25, 26, 28-31)	95-97	F (GU2, G80, J65)	1	26036756
	7-C6	5.510	CASE, DIFF (W/INT GEARS) (INCLS 25, 26, 28-31)	95-97	F (GU5, GU6, G80, J65)	1	26036755
28.	7-C11	5.531	BOLT, DIFF R/GR (PART OF 27) (7/16-20 LH THD)	95-97	F	10	14066913
29.	7-C12	5.543	WASHER, DIFF SI GR THR (PART OF 27) (69MM OD, 40ID, .77THK)	95-97	F	1	26063838
30.	7-C9	5.527	GEAR KIT, DIFF SI & PINION (PART OF 27) (INCLS GEARS, SCREW, SHAFT & WASHERS)	95-97	F	1	12375622
31.	7-C11	5.542	WASHER, DIFF DRV P/GR THR (PART OF 27)	95-97	F	1	26041179
32.	7-C23	5.855	BEARING, RR WHL (AC-DELCO #RW204)	95-97	F	2	9428573
33.	7-C23	5.822	SEAL, RR WHL BRG	95-97	F	2	26029139
34.	7-B14	5.002	BOLT, RR BRK BKG PLT (HAS COATING)	95-97	F	8	26037140
35.	7-C5	5.422	LOCK, R/AXL SHF	95-97	F	2	344171
36.	7-C4	5.420	SHAFT, R/AXL	95-97	F (J65, G80, NW9)	2	26063144
37.	7-C22	5.812	BOLT, RR WHL (GREEN) (M12X1.5X34MM) (SERRATED SHLDR)	95-97	F	10	9591981
		8.921	RETAINER, PUSH ON BOLT M12X1.75 PC (RR BRK DRUM (PUSH ON))	95-97		AR	11502737
38.		N.S.	BRAKE, RR (SEE "BRAKE ASM/REAR DRUM" ILLUSTRATION IN GRP. 5.000 FOR DETAILED VIEW.)	95-97			
		N.S.	BRAKE, RR (NOT USED AFTER 1997)				
39.		N.S.	DRUM, RR BRK (NOT USED AFTER 1997)	95-97			
		8.921	RETAINER, PUSH ON BOLT M12X1.75 PC	95-97		AR	11502737
		N.S.	RETAINER, RR BRK DRUM (PUSH ON) ((NOT USED IN 1998-1999))				
40.		8.915	NUT, HEX .375-16X21/64 301M ZC (RR BRK BKG PLT)	95-97		8	9414034
41.	7-B13	5.001	SHIM, RR BRK CLPR MT PLT	95-97	F	1	26034667
42.	7-A7	4.665	BOLT, RR BRK CLPR (AC-DELCO #18K203)	95-97	FP	AR	18034577
	7-A7	4.665	BOLT, RR BRK CLPR (M12-1.75 X 33.1)	95-97	F (J65)	4	10229606
	7-A7	4.665	BOLT, RR BRK CLPR (ANCHOR PLATE & BRK)	95-97	F (J65)	2	10112649
	7-A7	4.665	BOLT, RR BRK CLPR (GDE PIN)	95-97	F (J65)	4	14067559
43.	7-B13	5.001	PLATE, RR BRK CLPR MT	95-97	F (J65, NW9)	LH	18021045
	7-B13	5.001	PLATE, RR BRK CLPR MT	95-97	F (J65, NW9)	RH	18021046
		8.900	BOLT, HEX W/CON WA M6X1X15 9.8 PZOR 12.5-OD FULL THD (SENSOR TO BRACKET) (AC-DELCO #8639743)	95-97		RH	8639743

cardiagn.com

	7-A13	4.710	**SENSOR**, RR WHL SPD (METAL CRIMPED MOUNT TABS) (AC-DELCO #10456264)	95-97	F (NW9)	2	10456264
44.	7-A7	4.665	**CALIPER**, RR BRK (SEE "BRAKE CALIPER/REAR" ILLUSTRATION IN GRP. 4.000 FOR DETAILED VIEW.) (AC-DELCO #172-2109)	95-97	F (J65)	LH	18021198
	7-A7	4.665	**CALIPER**, RR BRK (SEE "BRAKE CALIPER/REAR" ILLUSTRATION IN GRP. 4.000 FOR DETAILED VIEW.) (AC-DELCO #172-2110)	95-97	F (J65)	RH	18021199
45.	7-C20	5.809	**ROTOR**, RR BRK (AC-DELCO #18A1060)	95	FP	LH	18039644
	7-C20	5.809	**ROTOR**, RR BRK (AC-DELCO #18A1061)	95	FP	RH	18039645
	7-C20	5.809	**ROTOR**, RR BRK (AC-DELCO #18A624)	95	F (GU2, GU5, G80, J65)	2	18028224
	7-C20	5.809	**ROTOR**, RR BRK (AC-DELCO #18A624)	96	F (GU2, G80, J65) (EXC VE2)	2	18028224
	7-C20	5.809	**ROTOR**, RR BRK (AC-DELCO #18A624)	96	F (LT1, GU5, G80, J65) .	2	18028224
	7-C20	5.809	**ROTOR**, RR BRK (AC-DELCO #18A624)	97	F (GU2, G80, J65, GU6) (EXC VE2)	2	18028224
	7-C20	5.809	**ROTOR**, RR BRK (AC-DELCO #18A624)	97	F (LT1, GU5, G80, J65, GU6)	2	18028224
46.	7-B14	5.002	**BOLT**, RR BRK BKG PLT (BOLT, CALIPER BRKT TO AXLE HSG (3/8X16X1.25)) (HAS COATING) .	95-97	F	8	26037140
47.	7-A18	4.785	**GUIDE**, PARK BRK RR CBL	95-97	F	1	10258129

RPO DEFINITIONS
GU2 -- AXLE,REAR,2.73 RATIO
GU4 -- AXLE,REAR,3.08 RATIO
GU5 -- AXLE,REAR,3.23 RATIO
GU6 -- AXLE,REAR,3.42 RATIO
G80 -- AXLE,REAR,POSITRACTION,LIMITED SLIP
J41 -- BRAKE SYSTEM,POWER,FRONT DISC,REAR DRUM(CAST IRON)
J65 -- BRAKE SYSTEM,POWER,FRONT AND REAR DISC
LT1 -- ENGINE-GAS, 8 CYL, 5.7L(5.7P),MFI,HO
L36 -- ENGINE GAS, 6 CYL, 3.8K, MFI, V6, HO (ERV6 SERIES)
NW9 -- TRACTION CONTROL ELECTRONIC
VE2 -- PROTECTOR SOURCE APPLIED

cardiagn.com

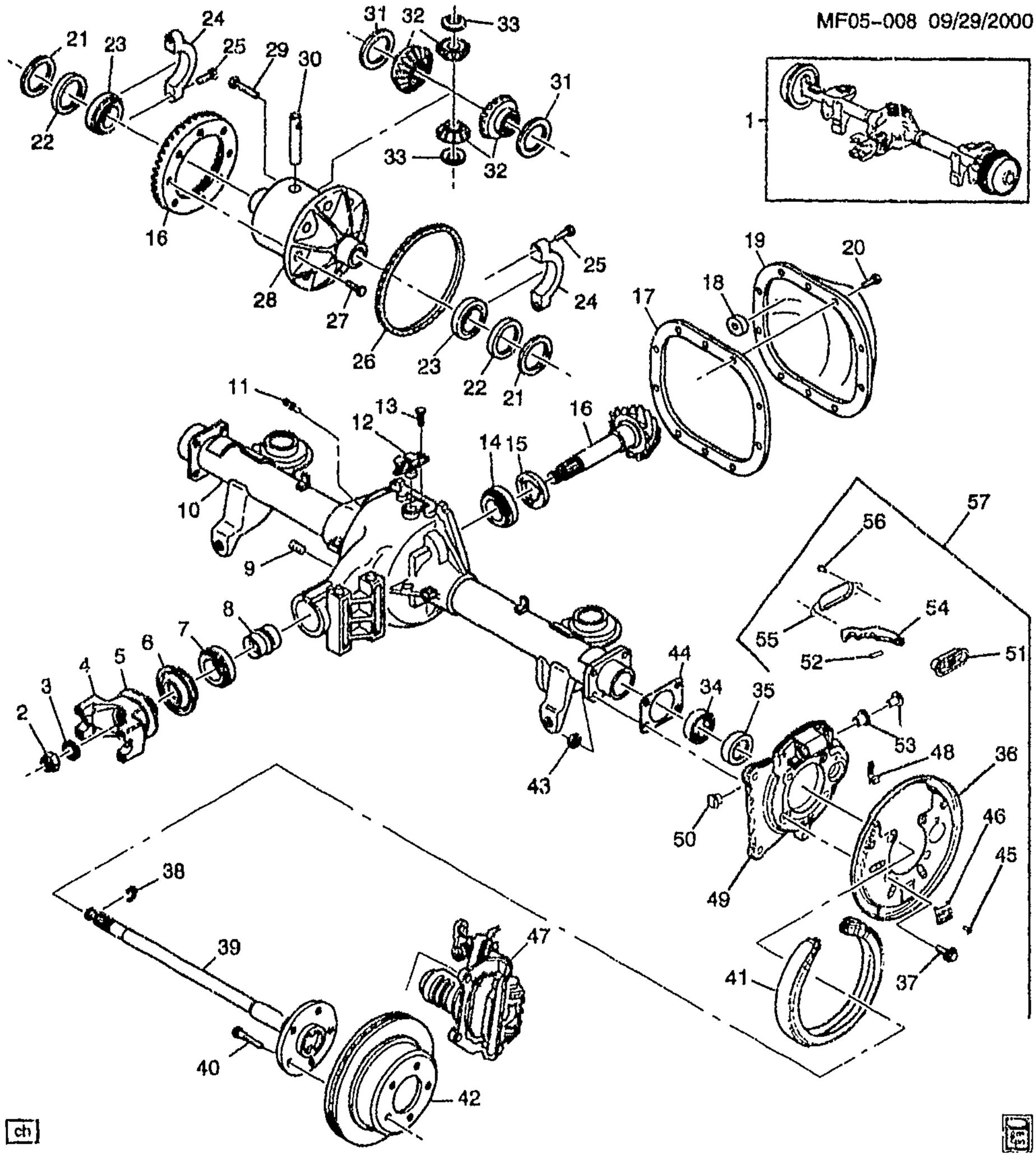

MF05-008

1998-2002 F AXLE ASM/REAR (J65,EXC NW9)

1.	DISCON	AXLE, RR (3.23 RATIO) (UNPAINTED FOR DOMESTIC USE) (CODE 8PF)	98 F (LS1, GU5, G80, J65) (EXC NW9, VE2)	1 12554916

cardiagn.com

	DISCON	AXLE, RR (3.23 RATIO) (UNPAINTED FOR DOMESTIC USE) (CODE 8PF)	98	F (L36, GU5, G80, J65) (EXC VE2)	1	12554916
	DISCON	AXLE, RR (3.23 RATIO) (CODE 8PY)	98	F (L36, GU5, J65) (EXC G80, NW9, VE2)	1	12559857
7–B21	5.386	AXLE, RR (3.23 RATIO)	99	F (LS1, GU5, G80, J65) (EXC NW9)	1	12562542
7–B21	5.386	AXLE, RR (3.23 RATIO)	99	F (L36, GU5, G80, J65)	1	12562542
7–B21	5.386	AXLE, RR (3.23 RATIO)	99	F (L36, GU5, J65) (EXC G80, VE2)	1	12562544
7–B21	5.386	AXLE, RR (3.23 RATIO)	00–02	F (L36, GU5, J65) (EXC G80, VE2)	1	12570106
7–B21	5.386	AXLE, RR (3.23 RATIO)	00–02	F (LS1, GU5, G80, J65) (EXC NW9, VE2)	1	12570107
7–B21	5.386	AXLE, RR (3.23 RATIO)	00–02	F (L36, GU5, G80, J65) (EXC VE2)	1	12570107
7–B21	5.386	AXLE, RR (3.42 RATIO) (UNPAINTED FOR DOMESTIC USE) (CODE 8PN)	98	F (LS1, GU6, G80, J65) (EXC NW9, VE2)	1	12554921
	DISCON	AXLE, RR (3.42 RATIO) (UNPAINTED FOR DOMESTIC) (CODE 8PS)	98	F (L36, GU6, G80, J65) (EXC VE2)	1	12554923
7–B21	5.386	AXLE, RR (3.42 RATIO)	99	F (LS1, GU6, G80, J65) (EXC NW9)	1	12570112
7–B21	5.386	AXLE, RR (3.42 RATIO)	99	F (L36, GU6, G80, J65)	1	12570112
7–B21	5.386	AXLE, RR (3.42 RATIO)	00–02	F (L36, GU6, G80, J65) (EXC VE2)	1	12570110
7–B21	5.386	AXLE, RR (3.42 RATIO)	00–02	F (LS1, GU6, G80, J65) (EXC NW9, VE2)	1	12570111
7–B21	5.386	AXLE, RR (3.42 RATIO)	00–02	F (L36, GU6, J65) (EXC G80, VE2)	1	12570115
	DISCON	AXLE, RR (2.73 RATIO) (CODE 8PG)	98	F (GU2, G80, J65) (EXC NW9, VE2)	1	12555052
7–B21	5.386	AXLE, RR (2.73 RATIO)	99–02	F (LS1, GU2, G80, J65) (EXC NW9, VE2)	1	12570101
	DISCON	AXLE, RR (3.08 RATIO) (CODE 8PX)	98	F (L36, GU4, J65) (EXC G80, NW9, VE2)	1	12559794
7–B21	5.386	AXLE, RR (3.08 RATIO)	99–02	F (L36, GU4, J65) (EXC G80, VE2)	1	12570105
	DISCON	AXLE, RR (3.23 RATIO) (PAINTED FOR EXPORT) (CODE 8PM)	98	F (LS1, GU5, G80, J65, VE2) (EXC NW9) (EXPORT)	1	12554917
	DISCON	AXLE, RR (3.23 RATIO) (PAINTED FOR EXPORT) (CODE 8PM)	98	F (L36, GU5, G80, J65, VE2) (EXPORT)	1	12554917
7–B21	5.386	AXLE, RR (3.23 RATIO)	00–02	F (LS1, GU5, G80, J65, VE2) (EXC NW9) (EXPORT)	1	12570108
7–B21	5.386	AXLE, RR (3.23 RATIO)	00–02	F (L36, GU5, G80, J65, VE2) (EXPORT)	1	12570108
	DISCON	AXLE, RR (3.42 RATIO) (CODE 8PJ)	98	F (LS1, GU6, G80, J65, VE2) (EXC NW9) (EXPORT)	1	12554924
	DISCON	AXLE, RR (3.42 RATIO) (CODE 8PJ)	98	F (L36, GU6, G80, J65, VE2) (EXPORT)	1	12554924
	DISCON	AXLE, RR (3.42 RATIO) (CODE 8PZ)	98	F (L36, GU6, J65, VE2) (EXC NW9) (EXPORT) .	1	12559858
7–B21	5.386	AXLE, RR (3.42 RATIO)	00–02	F (LS1, GU6, G80, J65, VE2) (EXC NW9) (EXPORT)	1	12570112

cardiagn.com

	7-B21	5.386	**AXLE**, RR (3.42 RATIO)	00-02	F (L36, GU6, G80, J65, VE2) (EXPORT)	1	12570112
2.	7-C17	5.595	**NUT**, DIFF DRV P/GR (7/8-14 X 11/16)	99-02	F	2	9783762
3.	7-C17	5.595	**WASHER**, DIFF DRV P/GR (57/64 X 1 5/8 X 3/16)	98-02	F	1	517900
4.	7-C15	5.545	**YOKE**, DIFF DRV P/GR (27 TEETH) (INCLS DEFLECTOR) ...	98-02	F	1	7827670
5.		N.S.	**DEFLECTOR**, DIFF DRV P/GR DIRT		.....		
6.	7-C6	5.469	**SEAL**, DIFF DRV P/GR	98-99	F	1	26026792
	7-C6	5.469	**SEAL**, DIFF DRV P/GR (W/2 PIECE PINION SEAL (TRIPLE LIP)) (FOR 1ST DES SEE 26026792)	00	F (2ND DES)	1	12471523
	7-C6	5.469	**SEAL**, DIFF DRV P/GR (W/1 PIECE PINION SEAL (NON--TRIPLE LIP)) (FOR 2ND DES SEE 12471523)	00	F (1ST DES)	1	26026792
	7-C6	5.469	**SEAL**, DIFF DRV P/GR	01-02	F	1	12471523
7.	7-C5	5.447	**BEARING**, DIFF DRV P/GR OTR (INCLS CUP & CONE) (TIMKEN M-86649-M-86610) (AC-DELCO #S9)	98-02	F	1	9417784
8.	7-C5	5.453	**SPACER**, DIFF DRV P/GR BRG (PART OF 10, 16) (.071-.058 THK)	98-02	F	AR	9785792
9.		8.971	**PLUG**, 1/2-14 X 39/64 (R/AXL HSG FILL) (AC-DELCO #25522466)	98-02	.....	AR	25522466
10.	7-C3	5.387	**HOUSING KIT**, R/AXL (INCLS 8, 22) (INCLS BEARING SPACERS AND HOLE FOR SPEED SENSOR)	98-02	F (LS1) (EXC NW9)	1	12471188
	7-C3	5.387	**HOUSING KIT**, R/AXL (INCLS 8, 22) (INCLS BEARING SPACERS AND HOLE FOR SPEED SENSOR)	98-02	F (L36)	1	12471188
11.	7-C3	5.387	**VENT**, R/AXL	98-02	F	1	1236317
12.	7-A13	4.710	**SENSOR**, WHL SPD (RR) (AC-DELCO #10456115)	98-02	F (LS1) (EXC NW9)	1	10456115
	7-A13	4.710	**SENSOR**, WHL SPD (RR) (AC-DELCO #10456115)	98-02	F (L36)	1	10456115
13.		8.900	**BOLT**, HEX W/CON WA M6X1X15 9.8 PZOR 12.5-OD FULL THD (RR WHL SPD SEN) (AC-DELCO #8639743)	98-02	.....	AR	8639743
14.	7-C6	5.484	**BEARING**, DIFF DRV P/GR INR (INCLS CUP & CONE) (AC-DELCO #22510042)	98-02	F	1	22510042
15.	7-C5	5.460	**SHIM KIT**, DIFF DRV P/GR BRG (.046-.050)	98-02	F	1	26043990
	7-C5	5.460	**SHIM KIT**, DIFF DRV P/GR BRG (.025-.029)	98-02	F	AR	553022
	7-C5	5.460	**SHIM KIT**, DIFF DRV P/GR BRG (.030-.034)	98-02	F	AR	553023
	7-C5	5.460	**SHIM KIT**, DIFF DRV P/GR BRG (.035-.039)	98-02	F	AR	553024

cardiagn.com

	7-C5	5.460	SHIM KIT, DIFF DRV P/GR BRG (.040-.045)	98-02	F	AR	553025
	7-C5	5.460	SHIM KIT, DIFF DRV P/GR BRG (.020-.024)	98-02	F	AR	559755
16.	7-C10	5.529	GEAR SET, DIFF RING & DRV PINION (INCLS 8, 22)	98-02	F (GU6, G80, J65)	1	12471191
	7-C10	5.529	GEAR SET, DIFF RING & DRV PINION (INCLS 8, 22)	98-02	F (LS1, GU2)	1	12471190
	7-C10	5.529	GEAR SET, DIFF RING & DRV PINION (INCLS 8, 22)	98-02	F (GU5, G80)	1	12471192
	7-C10	5.529	GEAR SET, DIFF RING & DRV PINION (INCLS 8, 22) (INCLS BOLTS, PINION, RING & SPACERS)	98-02	F (L36, GU4) (EXC G80)	1	26029417
	7-C10	5.529	GEAR SET, DIFF RING & DRV PINION (INCLS 8, 22) (INCLS BOLTS, PINION, RING & SPACERS)	98	F (L36, GU6) (EXC G80, NW9)	1	26029418
	7-C10	5.529	GEAR SET, DIFF RING & DRV PINION (INCLS 8, 22) (INCLS BOLTS, PINION, RING & SPACERS)	99	F (L36, GU6) (EXC G80)	1	26029418
	7-C10	5.529	GEAR SET, DIFF RING & DRV PINION (INCLS 8, 22) (INCLS BOLTS, PINION, RING & SPACERS)	00	F (L36, GU6, J65) (EXC G80, VE2)	1	26029418
	7-C10	5.529	GEAR SET, DIFF RING & DRV PINION (W/O DIFF BRG SPCR) (INCLS 8, 22)	98-02	F (L36, GU5) (EXC G80)	1	26046642
17.	7-C4	5.399	GASKET, R/AXL HSG CVR	98-02	F	1	26016661
18.	7-C6	5.508	MAGNET, R/AXL HSG CHIP COLLECTOR (PART OF 19) (1.75" DIA ROUND) (4.105) (AC-DELCO #3787240)	98-02	F	1	3787240
19.	7-C4	5.398	COVER, R/AXL HSG (INCLS 18)	98-02	F	1	12471370
20.	7-C4	5.398	BOLT, HEX (HEX WA HD 5/16-18X7/8) (R/AXL HSG CVR)	98-02		AR	563592
21.	7-C11	5.537	SHIM KIT, DIFF BRG (.064-.070 THK RANGE)	98-02	F	AR	3853759
	7-C11	5.537	SHIM KIT, DIFF BRG (.072-.078 THK RANGE)	98-02	F	AR	3853760
	7-C11	5.537	SHIM KIT, DIFF BRG (.080-.086 THK RANGE)	98-02	F	AR	3853761
	7-C11	5.537	SHIM KIT, DIFF BRG (.088-.094 THK RANGE)	98-02	F	AR	3853762
	7-C11	5.537	SHIM KIT, DIFF BRG (.096-.100 THK RANGE)	98-02	F	AR	3853912
	7-C11	5.537	SHIM KIT, DIFF BRG (.052-.056 THK RANGE)	98-02	F	AR	3907088
	7-C11	5.537	SHIM KIT, DIFF BRG (.058-.063 THK RANGE)	98-02	F	AR	3907089
	7-C11	5.537	SHIM KIT, DIFF BRG (.040-.044 THK RANGE)	98-02	F	AR	3995791
	7-C11	5.537	SHIM KIT, DIFF BRG (.046-.050 THK RANGE)	98-02	F	AR	3995792
22.	7-C11	5.537	SPACER, DIFF BRG (PART OF 10, 16) (.170-.172 THK)	98-02	F	AR	9775809

cardiagn.com

23.	7-C11	5.536	**BEARING**, DIFF (SIDE) (INCLS CUP&CONE) (1 5/8 ID X 2 57/64 OD X 27/32 THK))	98-02	F	2	26051816
24.		N.S.	**CAP**, DIFF CARR (CAP, DIFF CARR BRG)				
25.		8.900	**BOLT**, HEX .437-14X2.250 CL-2A CAD/ZC (DIFF BRG CAP)	98-02		AR	454947
26.	7-A13	4.710	**WHEEL**, RR WHL SPD SEN RELUCTOR (AC-DELCO #26014607)	98-02	F (GU4, GU2)	1	26014607
	7-A13	4.710	**WHEEL**, RR WHL SPD SEN RELUCTOR (AC-DELCO #26029185)	98-02	F (LS1, GU5, GU6) (EXC NW9)	1	26029185
	7-A13	4.710	**WHEEL**, RR WHL SPD SEN RELUCTOR (AC-DELCO #26029185)	98-02	F (L36, GU5, GU6)	1	26029185
27.	7-C11	5.531	**BOLT**, DIFF R/GR (PART OF 28) (7/16-20 LH THD)	98-02	F	10	14066913
28.	7-C6	5.510	**CASE**, DIFF (INCLS 27, 29-33) (STAMPED 3443)	98	F (GU5, GU6, J65) (EXC G80)	1	26033477
	7-C6	5.510	**CASE**, DIFF (INCLS 27, 29-33)	99-02	F (GU2, G80, J65) (EXC NW9, VE2)	1	12471371
	7-C6	5.510	**CASE**, DIFF (INCLS 27, 29-33)	99-02	F (GU5, GU6, G80, J65)	1	12471371
	7-C6	5.510	**CASE**, DIFF (INCLS 27, 29-33) (STAMPED 3443)	99	F (L36, GU5, J65) (EXC G80, VE2)	1	26033477
	7-C6	5.510	**CASE**, DIFF (INCLS 27, 29-33) (STAMPED 3443)	00	F (L36, GU6, J65) (EXC G80, VE2)	1	26033477
	7-C6	5.510	**CASE**, DIFF (LESS INT GEARS) (INCLS 27, 29-33) (STAMPED 3444)	98-02	F (L36, GU4, J65) (EXC G80, VE2)	1	26033478
	7-C6	5.510	**CASE**, DIFF (W/INT GEARS) (INCLS 27, 29-33)	98	F (LS1, GU2, G80, J65) (EXC NW9)	1	26036755
	7-C6	5.510	**CASE**, DIFF (W/INT GEARS) (INCLS 27, 29-33)	98	F (LS1, GU5, GU6, G80)	1	26036755
	7-C5	5.510	**CASE**, DIFF (W/INT GEARS) (INCLS 27, 29-33)	98	F (L36, GU5, G80)	1	26036755
	7-C6	5.510	**CASE**, DIFF (W/INT GEARS) (INCLS 27, 29-33)	98	F (L36, GU6, VE2)	1	26036755
	7-C6	5.510	**CASE**, DIFF (W/INT GEARS) (INCLS 27, 29-33)	98	F (L36, GU6) (EXC VE2)	1	26036756
		N.S.	**DIFFERENTIAL**,				
29.	7-C8	5.518	**BOLT**, DIFF P/GR SHF LK (*KIT1)	98-02	F	1	14056196
30.	7-C8	5.517	**SHAFT**, DIFF P/GR (*KIT1)	98-02	F (L36) (EXC G80)	2	26041321
31.		N.S.	**WASHER**, FRT DIFF SI GR THR (*KIT1)				
32.		N.S.	**GEAR KIT**, DIFF PINION				
33.		N.S.	**WASHER**, DIFF PIN THR (*KIT1)				
	7-C12	5.543	**WASHER**, DIFF SI GR THR (WASHER, DIFF PIN THR) (2.720MM OD, 1.531 ID) (*KIT1)	98-02	F (L36) (EXC G80)	2	344165
	7-C12	5.543	**WASHER**, DIFF SI GR THR (WASHER, DIFF PIN THR) (2.720MM OD, 1.531 ID) (*KIT1)	98	F (L36) (EXC G80, NW9)	2	344165
	7-C12	5.543	**WASHER**, DIFF SI GR THR (WASHER, DIFF PIN THR) (69MM OD, 40ID, .77THK) (*KIT1)	98-02	F (L36) (EXC G80)	2	26063838

cardiagn.com

	7-C12	5.543	**WASHER**, DIFF SI GR THR (WASHER, DIFF PIN THR) (69MM OD, 40ID, .77THK) (*KIT1)	98	F (L36) (EXC G80, NW9)	2	26063838
34.	7-C23	5.855	**BEARING**, RR WHL (AC-DELCO #RW204)	98-02	F	2	9428573
35.	7-C23	5.822	**SEAL**, RR WHL BRG	98-02	F	2	26029139
36.	7-B14	5.002	**SHIELD**, RR BRK (PART OF 57)	98-02	F (EXC G80)	LH	12454976
	7-B14	5.002	**SHIELD**, RR BRK (PART OF 57)	98-02	F (EXC G80)	RH	12454977
37.	7-B14	5.002	**BOLT**, RR BRK BKG PLT (RR BRK BKG PLT)	98-02	F (LS1, GU5, GU6)	8	26059964
	7-B14	5.002	**BOLT**, RR BRK BKG PLT (RR BRK BKG PLT)	98-02	F (L36, GU4, GU5, GU6)	8	26059964
	7-B14	5.002	**BOLT**, RR BRK BKG PLT (RR BRK BKG PLT)	99-02	F (LS1, GU2) (EXC NW9, VE2)	8	26059964
		8.917	**NUT-METRIC ALL METAL** DIRECTIONAL PREVAILING TORQUE TENSION HEX, M8X1.25X25 13MM SOCKET	98-02		AR	11515752
38.	7-C5	5.422	**LOCK**, R/AXL SHF	98-02	F	2	344171
39.	7-C4	5.420	**SHAFT**, R/AXL	98	F (EXC NW9)	2	26059962
	7-C4	5.420	**SHAFT**, R/AXL	99-02	F (LS1) (EXC NW9)	2	26059962
	7-C4	5.420	**SHAFT**, R/AXL	99-02	F (L36)	2	26059962
40.	7-C22	5.812	**STUD**, RR WHL (RR)	98-02	F	5	9591978
		8.921	**RETAINER**, PUSH ON BOLT M12X1.75 PC	98-02		AR	11502737
	7-C22	5.812	**BOLT**, RR WHL (RR)	98-02	F	10	9591978
41.		N.S.	**SHOE/LINING (PART OF 57)** (*KIT2, KIT3)				
42.	7-C20	5.809	**ROTOR**, RR BRK (AC-DELCO #177-857)	98-02	F	2	18060239
43.		8.915	**NUT**, HEX .375-16X21/64 301M ZC (RR BRK BKG PLT)	98-02		8	9414034
44.	7-B13	5.001	**SHIM**, RR BRK CLPR MT PLT	98-02	F	1	12471185
45.		N.S.	**SCREW**, SELF TAPPING (PART OF 57) (*KIT2, KIT3)				
46.		N.S.	**SPRING**, HOLD DOWN (PART OF 57) (*KIT3)				
47.	7-A10	4.667	**REPAIR KIT**, RR BRK CLPR HYD (SEE "BRAKE CALIPER/REAR" ILLUSTRATION IN GRP. 4.000 FOR DETAILED VIEW.)	98-02	F	2	12530687
		N.S.	**CALIPER**, RR BRK (SEE "BRAKE CALIPER/REAR" ILLUSTRATION IN GRP. 4.000 FOR DETAILED VIEW.)				
48.		N.S.	**PAWL**, ADJUSTMENT (PART OF 57) (*KIT3)				
49.	7-B13	5.001	**PLATE**, RR BRK BKG (PART OF 57)	98	F (L36) (EXC NW9)	LH	12454982
	7-B13	5.001	**PLATE**, RR BRK BKG (PART OF 57)	98	F (EXC NW9)	RH	12454983
	7-B13	5.001	**PLATE**, RR BRK BKG (PART OF 57)	99-02	F (L36) (EXC G80)	LH	12454982
	7-B13	5.001	**PLATE**, RR BRK BKG (PART OF 57)	99-02	F (L36) (EXC G80)	RH	12454983
50.		N.S.	**TAPPET** (PART OF 57) (*KIT3)				
51.		N.S.	**COVER**, DUST (PART OF 57) (*KIT3)				

cardiagn.com

52.		N.S.	**PUSHROD**, HANDBRAKE (PART OF 57) (*KIT3)				
53.		N.S.	**NUT**, ADJUSTING (PART OF 57) (*KIT3)			2	
54.		N.S.	**LEVER**, HANDBRAKE (PART OF 57) (*KIT3)				
55.		N.S.	**RETAINER**, BOOT (PART OF 57) (*KIT3)				
56.		N.S.	**SCREWS**, BOOT RETAINER (PART OF 57) (*KIT3)				
57.	7-B13	5.001	**PLATE**, RR BRK CLPR MT (INCLS 36, 41, 45, 46, 48-57) (INCLS PRK BRK SHOE)	98-02	F (LS1) (EXC NW9)	LH	10434796
	7-B13	5.001	**PLATE**, RR BRK CLPR MT (INCLS 36, 41, 45, 46, 48-57) (INCLS PRK BRK SHOE)	98-02	F (L36)	LH	10434796
	7-B13	5.001	**PLATE**, RR BRK CLPR MT (INCLS 36, 41, 45, 46, 48-57) (INCLS PRK BRK SHOE)	98-02	F (LS1) (EXC NW9)	RH	10434797
	7-B13	5.001	**PLATE**, RR BRK CLPR MT (INCLS 36, 41, 45, 46, 48-57) (INCLS PRK BRK SHOE)	98-02	F (L36)	RH	10434797

SERVICE KITS

1.	7-C9	5.527	**GEAR KIT**, DIFF PINION (INCLS 29, 30, 31, 33) (5.526)	98	F (L36) (EXC G80, NW9)	1	31022708
	7-C9	5.527	**GEAR KIT**, DIFF PINION (INCLS 29, 30, 31, 33) (5.526)	98-02	F (L36) (EXC G80, VE2)	1	31022708
2.	7-C17	5.605	**LINING KIT**, PARK BRK SHOE (INCLS 41, 45)	98-02	F (EXC G80)	2	12454993
3.	7-B17	5.149	**BRAKE KIT**, RR PARK (INCLS 41, 45, 46, 48, 50-56)	98-02	F (EXC G80)	2	12454994

RPO DEFINITIONS
GU2 – AXLE,REAR,2.73 RATIO
GU4 – AXLE,REAR,3.08 RATIO
GU5 – AXLE,REAR,3.23 RATIO
GU6 – AXLE,REAR,3.42 RATIO
G80 – AXLE,REAR,POSITRACTION,LIMITED SLIP
J65 – BRAKE SYSTEM,POWER,FRONT AND REAR DISC
LS1 – ENGINE GAS, 8 CYL, 5.7L, SFI, ALUMINUM ENGINE
L36 – ENGINE GAS, 6 CYL, 3.8K, MFI, V6, HO (ERV6 SERIES)
NW9 – TRACTION CONTROL ELECTRONIC
VE2 – PROTECTOR SOURCE APPLIED

cardiagn.com

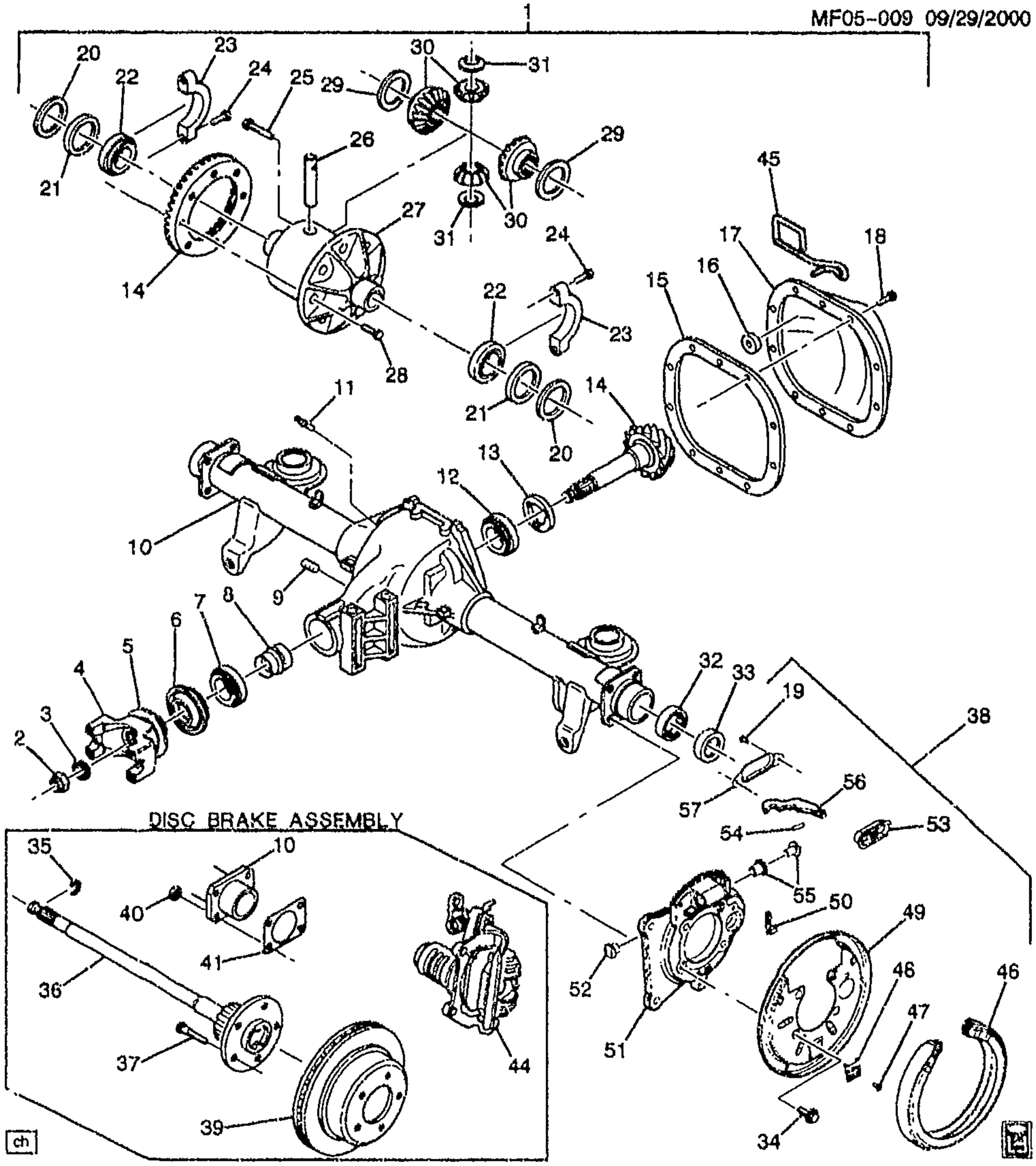

MF05-009

1998-2002 F AXLE ASM/REAR (NW9)

1.		DISCON	AXLE, RR (2.73 RATIO) (UNPAINTED FOR DOMESTIC USE) (CODE 8PD)	98	F (GU2, G80, J65, NW9) (EXC VE2)	1 12554913
	7-B21	5.386	AXLE, RR (2.73 RATIO)	00-02	F (LS1, GU2, G80, J65, NW9) (EXC VE2)	1 12570102

cardiagn.com

	7-B21	5.386	AXLE, RR (2.73 RATIO)	99-02	F (LS1, GU2, G80, J65, NW9, VE2)	1	12570103
		DISCON	AXLE, RR (3.23 RATIO) (UNPAINTED FOR DOMESTIC USE) (CODE 8PF)	98	F (L36, GU5, G80, J65) (EXC VE2)	1	12554916
		DISCON	AXLE, RR (3.23 RATIO) (CODE 8PB)	98	F (LS1, GU5, G80, J65, NW9) (EXC VE2)	1	12554918
	7-B21	5.386	AXLE, RR (3.23 RATIO)	99	F (L36, GU5, G80, J65)	1	12562542
	7-B21	5.386	AXLE, RR (3.23 RATIO)	99	F (L36, GU5, J65) (EXC G80, VE2)	1	12562544
	7-B21	5.386	AXLE, RR (3.23 RATIO)	99-02	F (LS1, GU5, G80, J65, NW9) (EXC VE2)	1	12570109
	7-B21	5.386	AXLE, RR (3.23 RATIO)	00-02	F (L36, GU5, J65) (EXC G80, VE2)	1	12570106
	7-B21	5.386	AXLE, RR (3.23 RATIO)	00-02	F (L36, GU5, G80, J65) (EXC VE2)	1	12570107
		DISCON	AXLE, RR (3.42 RATIO) (UNPAINTED FOR DOMESTIC USE) (CODE 8PE)	98	F (LS1, GU6, G80, J65, NW9) (EXC VE2)	1	12554922
		DISCON	AXLE, RR (3.42 RATIO) (UNPAINTED FOR DOMESTIC) (CODE 8PS)	98	F (L36, GU6, G80, J65) (EXC VE2)	1	12554923
	7-B21	5.386	AXLE, RR (3.42 RATIO)	99	F (L36, GU6, G80, J65)	1	12570112
	7-B21	5.386	AXLE, RR (3.42 RATIO)	99	F (LS1, GU6, G80, J65, NW9)	1	12570113
	7-B21	5.386	AXLE, RR (3.42 RATIO)	00-02	F (LS1, GU6, G80, J65, NW9) (EXC VE2)	1	12570114
	7-B21	5.386	AXLE, RR (3.42 RATIO)	00-02	F (L36, GU6, J65) (EXC G80, VE2)	1	12570115
	7-B21	5.386	AXLE, RR (3.42 RATIO)	00-02	F (L36, GU6, G80, J65) (EXC VE2)	1	12570110
	7-B21	5.386	AXLE, RR (3.42 RATIO)	00-02	F (LS1, GU6, G80, J65, NW9, VE2)	1	12570113
		DISCON	AXLE, RR (2.73 RATIO) (PAINTED FOR EXPORT) (CODE 8PC)	98	F (LS1, GU2, G80, J65, NW9, VE2) (EXPORT) ..	1	12554914
		DISCON	AXLE, RR (3.23 RATIO) (PAINTED FOR EXPORT) (CODE 8PM)	98	F (L36, GU5, G80, J65, VE2) (EXPORT)	1	12554917
	7-B21	5.386	AXLE, RR (3.23 RATIO)	00-02	F (L36, GU5, G80, J65, VE2) (EXPORT)	1	12570108
	7-B21	5.386	AXLE, RR (3.23 RATIO)	02	F (LS1, GU5, G80, J65, NW9, VE2) (EXPORT) ..	1	12571803
		DISCON	AXLE, RR (3.42 RATIO) (CODE 8PJ)	98	F (L36, GU6, G80, J65, VE2) (EXPORT)	1	12554924
		DISCON	AXLE, RR (3.42 RATIO) (PAINTED FOR EXPORT) (CODE 8PA)	98	F (LS1, GU6, G80, J65, NW9, VE2) (EXPORT) ..	1	12560282
	7-B21	5.386	AXLE, RR (3.42 RATIO)	00-02	F (L36, GU6, G80, J65, VE2) (EXPORT)	1	12570112
2.	7-C17	5.595	NUT, DIFF DRV P/GR (7/8-14 X 11/16)	98-02	F	2	9783762
3.	7-C17	5.595	WASHER, DIFF DRV P/GR (57/64 X 1 5/8 X 3/16)	98-02	F	1	517900
4.	7-C15	5.545	YOKE, DIFF DRV P/GR (27 TEETH) (INCLS DEFLECTOR) ...	98-02	F	1	7827670
5.		N.S.	DEFLECTOR, DIFF DRV P/GR DIR1		.....		
6.	7-C6	5.469	SEAL, DIFF DRV P/GR	98-99	F	1	26026792

cardiagn.com

	7-C6	5.469	**SEAL**, DIFF DRV P/GR (W/2 PIECE PINION SEAL (TRIPLE LIP)) (FOR 1ST DES SEE 26026792)	00	F (2ND DES)	1	12471523
	7-C6	5.469	**SEAL**, DIFF DRV P/GR (W/1 PIECE PINION SEAL (NON-TRIPLE LIP)) (FOR 2ND DES SEE 12471523)	00	F (1ST DES)	1	26026792
	7-C6	5.469	**SEAL**, DIFF DRV P/GR	01-02	F	1	12471523
7.	7-C5	5.447	**BEARING**, DIFF DRV P/GR OTR (INCLS CUP & CONE) (TIMKEN M-86649-M-86610) (AC-DELCO #S9)	98-02	F	1	9417784
8.	7-C5	5.453	**SPACER**, DIFF DRV P/GR BRG (PART OF 10, 14) (.071-.058 THK)	98-02	F	AR	9785792
9.		8.971	**PLUG**, 1/2-14 X 39/64 (DIFF CARR FILL) (AC-DELCO #25522466)	98-02		1	25522466
10.	7-C3	5.387	**HOUSING KIT**, R/AXL (INCLS 8, 21) (INCLS BEARING SPACERS)	98-02	F (LS1, NW9)	1	12471186
	7-C3	5.387	**HOUSING KIT**, R/AXL (INCLS 8, 21) (INCLS BEARING SPACERS AND HOLE FOR SPEED SENSOR)	98-02	F (L36)	1	12471188
11.	7-C3	5.387	**VENT**, R/AXL	98-02	F	1	1236317
12.	7-C6	5.484	**BEARING**, DIFF DRV P/GR INR (INCLS CUP & CONE) (AC-DELCO #22510042)	98-02	F	1	22510042
13.	7-C5	5.460	**SHIM KIT**, DIFF DRV P/GR BRG (.046-.050)	98-02	F	1	26043990
	7-C5	5.460	**SHIM KIT**, DIFF DRV P/GR BRG (.025-.029)	98-02	F	AR	553022
	7-C5	5.460	**SHIM KIT**, DIFF DRV P/GR BRG (.030-.034)	98-02	F	AR	553023
	7-C5	5.460	**SHIM KIT**, DIFF DRV P/GR BRG (.035-.039)	98-02	F	AR	553024
	7-C5	5.460	**SHIM KIT**, DIFF DRV P/GR BRG (.040-.045)	98-02	F	AR	553025
	7-C5	5.460	**SHIM KIT**, DIFF DRV P/GR BRG (.020-.024)	98-02	F	AR	559755
14.	7-C10	5.529	**GEAR SET**, DIFF RING & DRV PINION (INCLS 8, 21)	98-02	F (GU6, G80, J65)	1	12471191
	7-C10	5.529	**GEAR SET**, DIFF RING & DRV PINION (INCLS 8, 21)	98-02	F (LS1, GU2)	1	12471190
	7-C10	5.529	**GEAR SET**, DIFF RING & DRV PINION (INCLS 8, 21)	98-02	F (GU5, G80)	1	12471192
	7-C10	5.529	**GEAR SET**, DIFF RING & DRV PINION (INCLS 8, 21) (INCLS BOLTS, PINION, RING & SPACERS)	98-02	F (L36, GU4) (EXC G80)	1	26029417
	7-C10	5.529	**GEAR SET**, DIFF RING & DRV PINION (INCLS 8, 21) (INCLS BOLTS, PINION, RING & SPACERS)	99	F (L36, GU6) (EXC G80)	1	26029418

cardiagn.com

	7-C10	5.529	**GEAR SET**, DIFF RING & DRV PINION (INCLS 8, 21) (INCLS BOLTS, PINION, RING & SPACERS)	00	F (L36, GU6, J65) (EXC G80, VE2)	1	26029418
	7-C10	5.529	**GEAR SET**, DIFF RING & DRV PINION (W/O DIFF BRG SPCR) (INCLS 8, 21)	98-02	F (L36, GU5) (EXC G80)	1	26046642
15.	7-C4	5.399	**GASKET**, R/AXL HSG CVR	98-02	F	1	26016661
16.	7-C6	5.508	**MAGNET**, R/AXL HSG CHIP COLLECTOR (PART OF 17) (1.75" DIA ROUND) (4.105) (AC-DELCO #3787240)	98-02	F	1	3787240
17.	7-C4	5.398	**COVER**, R/AXL HSG (INCLS 16)	98-02	F	1	12471370
18.	7-C4	5.398	**BOLT**, HEX (HEX WA HD 5/16-18X7/8) (R/AXL HSG CVR)	98-02		8	563592
	7-C4	5.398	**BOLT**, R/AXL HSG CVR (HEX 5/16-18 X 1 7/16) (7.242)	98-02		2	458985
19.		N.S.	**SCREWS**, BOOT RETAINER (PART OF 14) (*KIT2)				
20.	7-C11	5.537	**SHIM KIT**, DIFF BRG (.064-.070 THK RANGE)	98-02	F	AR	3853759
	7-C11	5.537	**SHIM KIT**, DIFF BRG (.072-.078 THK RANGE)	98-02	F	AR	3853760
	7-C11	5.537	**SHIM KIT**, DIFF BRG (.080-.086 THK RANGE)	98-02	F	AR	3853761
	7-C11	5.537	**SHIM KIT**, DIFF BRG (.088-.094 THK RANGE)	98-02	F	AR	3853762
	7-C11	5.537	**SHIM KIT**, DIFF BRG (.096-.100 THK RANGE)	98-02	F	AR	3853912
	7-C11	5.537	**SHIM KIT**, DIFF BRG (.052-.056 THK RANGE)	98-02	F	AR	3907088
	7-C11	5.537	**SHIM KIT**, DIFF BRG (.058- 063 THK RANGE)	98-02	F	AR	3907089
	7-C11	5.537	**SHIM KIT**, DIFF BRG (.040-.044 THK RANGE)	98-02	F	AR	3995791
	7-C11	5.537	**SHIM KIT**, DIFF BRG (.046-.050 THK RANGE)	98-02	F	AR	3995792
21.	7-C11	5.537	**SPACER**, DIFF BRG (PART OF 10, 14) (.170-.172 THK)	98-02	F	AR	9775809
22.	7-C11	5.536	**BEARING**, DIFF (SIDE) (INCLS CUP&CONE) (1 5/8 ID X 2 57/64 OD X 27/32 THK))	98-02	F	2	26051816
23.		N.S.	**CAP**, DIFF CARR BRG				
24.	7-C6	5.506	**BOLT**, DIFF BRG CAP (.437-14X2.250 CL-2A) (CAD/ZC) (8.900)	98-02	F	4	454947
		8.900	**BOLT**, HEX .437-14X2.250 CL-2A CAD/ZC (DIFF BRG CAP)	98-02		AR	454947
25.	7-C8	5.518	**BOLT**, DIFF P/GR SHF LK (PART OF 27)	98-02	F	1	14056196
26.	7-C8	5.517	**SHAFT**, DIFF P/GR (PART OF 27)	98-02	F (L36) (EXC G80)	2	26041321
27.	7-C6	5.510	**CASE**, DIFF (INCLS 25, 26, 28-31) (STAMPED 3443)	98	F (GU5, GU6, J65) (EXC G80)	1	26033477
	7-C6	5.510	**CASE**, DIFF (INCLS 25, 26, 28-31)	99-02	F (GU5, GU6, G80, J65)	1	12471371
	7-C6	5.510	**CASE**, DIFF (INCLS 25, 26, 28-31)	99-02	F (LS1, GU2, G80, J65, NW9)	1	12471372

cardiagn.com

	7-C6	5.510	CASE, DIFF (INCLS 25, 26, 28-31) (STAMPED 3443)	99	F (L36, GU5, J65) (EXC G80, VE2)	1	26033477
	7-C6	5.510	CASE, DIFF (INCLS 25, 26, 28-31) (STAMPED 3443)	00	F (L36, GU6, J65) (EXC G80, VE2)	1	26033477
	7-C6	5.510	CASE, DIFF (LESS INT GEARS) (INCLS 25, 26, 28-31) (STAMPED 3444)	98-02	F (L36, GU4, J65) (EXC G80, VE2)	1	26033478
	7-C6	5.510	CASE, DIFF (W/INT GEARS) (INCLS 25, 26, 28-31)	98	F (LS1, GU5, GU6, G80)	1	26036755
	7-C6	5.510	CASE, DIFF (W/INT GEARS) (INCLS 25, 26, 28-31)	98	F (L36, GU5, G80)	1	26036755
	7-C6	5.510	CASE, DIFF (W/INT GEARS) (INCLS 25, 26, 28-31)	98	F (L36, GU6, VE2)	1	26036755
	7-C6	5.510	CASE, DIFF (W/INT GEARS) (INCLS 25, 26, 28-31)	98	F (LS1, GU2, G80, NW9)	1	26036756
	7-C6	5.510	CASE, DIFF (W/INT GEARS) (INCLS 25, 26, 28-31)	98	F (L36, GU6) (EXC VE2)	1	26036756
28.	7-C8	5.518	BOLT, DIFF P/GR SHF LK (PART OF 27)	98-02	F	1	14056196
29.	7-C12	5.543	WASHER, DIFF SI GR THR (PART OF 27) (2.720MM OD, 1.531 ID) ..	98-02	F (L36) (EXC G80)	2	344165
	7-C12	5.543	WASHER, DIFF SI GR THR (PART OF 27) (69MM OD, 40ID, .77THK)	98-02	F (L36) (EXC G80)	2	26063838
30.	7-C9	5.527	GEAR KIT, DIFF PINION (PART OF 27) (5.526)	98-02	F (L36) (EXC G80, VE2)	1	31022708
31.	7-C11	5.542	WASHER, DIFF DRV P/GR THR (PART OF 27)	98-02	F (L36) (EXC G80)	2	26041179
32.	7-C23	5.855	BEARING, RR WHL (AC-DELCO #RW204)	98-02	F	2	9428573
33.	7-C23	5.822	SEAL, RR WHL BRG	98-02	F	2	26029139
34.	7-B14	5.002	BOLT, RR BRK BKG PLT (HAS COATING)	98	F (LS1, GU2, G80, J65, NW9, VE2)	8	26037140
	7-B14	5.002	BOLT, RR BRK BKG PLT	98-02	F (LS1, GU5, GU6)	8	26059964
	7-B14	5.002	BOLT, RR BRK BKG PLT	99-02	F (L36, GU4, GU5, GU6)	8	26059964
	7-B14	5.002	BOLT, RR BRK BKG PLT (HAS COATING)	99-02	F (LS1, GU2, G80, J65, NW9)	8	26037140
35.	7-C5	5.422	LOCK, R/AXL SHF	98-02	F	2	344171
36.	7-C4	5.420	SHAFT, R/AXL.	98	F (NW9)	2	26059972
	7-C4	5.420	SHAFT, R/AXL	99-02	F (L36)	2	26059962
	7-C4	5.420	SHAFT, R/AXL.	99-02	F (LS1, NW9)	2	26059972
37.	7-C22	5.812	BOLT, RR WHL	98-02	F	10	9591978
		8.921	RETAINER, PUSH ON BOLT M12X1.75 PC (RR BRK DRUM (PUSH ON))	98-02	.....	AR	11502737
38.	7-B13	5.001	PLATE, RR BRK CLPR MT (INCLS 1-13) (INCLS PRK BRK SHOE)	98-02	F (LS1, NW9)	LH	10434794
	7-B13	5.001	PLATE, RR BRK CLPR MT (INCLS 1-13) (INCLS PRK BRK SHOE)	98-02	F (LS1, NW9)	RH	10434795
	7-B13	5.001	PLATE, RR BRK CLPR MT (INCLS 1-13) (INCLS PRK BRK SHOE)	98-02	F (L36)	LH	10434796
	7-B13	5.001	PLATE, RR BRK CLPR MT (INCLS 1-13) (INCLS PRK BRK SHOE)	98-02	F (L36)	RH	10434797

cardiagn.com

39.	7-C20	5.809	**ROTOR**, RR BRK (AC-DELCO #177-857)	98-02	F	2	18060239
		8.921	**RETAINER**, PUSH ON BOLT M12X1.75 PC	98-02		AR	11502737
		N.S.	**RETAINER**, RR BRK DRUM (PUSH ON) ((NOT USED IN 1998-1999))	98-02			
40.		8.915	**NUT**, HEX .375-16X21/64 301M ZC (RR BRK BKG PLT)	98-02		8	9414034
41.	7-B13	5.001	**SHIM**, RR BRK CLPR MT PLT	98-02	F	1	12471185
44.		N.S.	**CALIPER**, RR BRK (SEE "BRAKE CALIPER/REAR" ILLUSTRATION IN GRP. 4.000 FOR DETAILED VIEW.)				
	7-A10	4.667	**REPAIR KIT**, RR BRK CLPR HYD (SEE "BRAKE CALIPER/REAR" ILLUSTRATION IN GRP. 4.000 FOR DETAILED VIEW.)	98-02	F	2	12530687
45.	7-A18	4.785	**GUIDE**, PARK BRK RR CBL	98-02	F	1	10258129
46.		N.S.	**SHOE/LINING (PART OF 58)** (*KIT1, KIT2)				
47.		N.S.	**SCREW**, SELF TAPPING (PART OF 58) (*KIT1, KIT2)				
48.		N.S.	**SPRING**, HOLD DOWN (PART OF 58) (*KIT2)				
49.	7-B14	5.002	**SHIELD**, RR BRK (PART OF 58)	98-02	F (EXC G80)	LH	12454976
	7-B14	5.002	**SHIELD**, RR BRK (PART OF 58)	98-02	F (EXC G80)	RH	12454977
50.		N.S.	**PAWL**, ADJUSTMENT (PART OF 58) (*KIT2)				
51.		N.S.	**COVER**, DUST (PART OF 59) (*KIT2)				
52.		N.S.	**TAPPET** (PART OF 59) (*KIT2)				
53.		N.S.	**COVER**, DUST (PART OF 59) (*KIT2)				
54.		N.S.	**PUSHROD**, HANDBRAKE (PART OF 59) (*KIT2)				
55.		N.S.	**NUT**, ADJUSTING (PART OF 59) (*KIT2)			2	
56.		N.S.	**LEVER**, HANDBRAKE (PART OF 59) (*KIT2)				
57.		N.S.	**RETAINER**, BOOT (PART OF 59) (*KIT2)				

SERVICE KITS

1.	7-C17	5.605	**LINING KIT**, PARK BRK SHOE (INCLS 46, 47)	98-02	F (EXC G80)	2	12454993
2.	7-B17	5.149	**BRAKE KIT**, RR PARK (INCLS 46-48, 50, 52-57)	98-02	F (EXC G80)	2	12454994

RPO DEFINITIONS

GU2 – AXLE,REAR,2.73 RATIO
GU4 – AXLE,REAR,3.08 RATIO
GU5 – AXLE,REAR,3.23 RATIO
GU6 – AXLE,REAR,3.42 RATIO
G80 – AXLE,REAR,POSITRACTION,LIMITED SLIP
J65 – BRAKE SYSTEM,POWER,FRONT AND REAR DISC
LS1 – ENGINE GAS, 8 CYL, 5.7L, SFI, ALUMINUM ENGINE
L26 – ENGINE GAS, 6 CYL, 3.8K, MFI, V6, HO (FBV6 SERIES)

cardiagn.com

NW9 – TRACTION CONTROL ELECTRONIC
VE2 – PROTECTOR SOURCE APPLIED

cardiagn.com

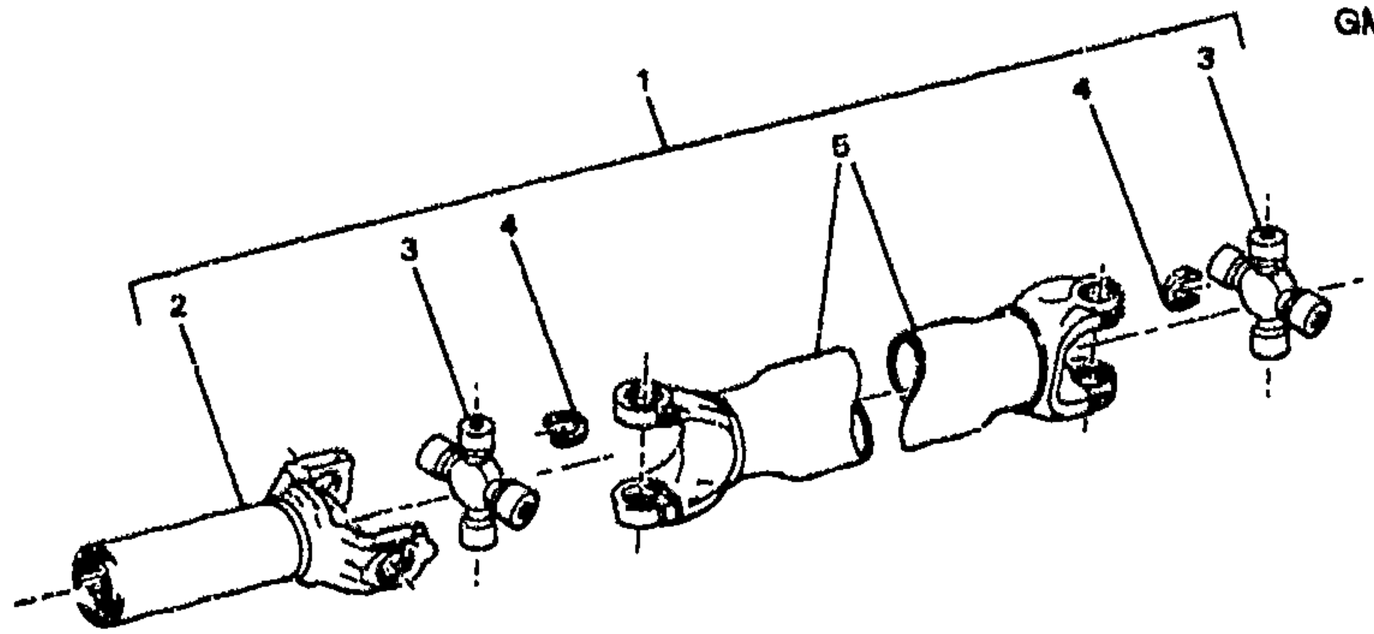

1993 F PROP SHAFT (LT1/5.7P)(1ST DES)

1.	7-C12	5.544	SHAFT, PROP (INCLS 2-5)	93	F (LT1, MD8) (EXC J1F)	1	12568188
	7-C12	5.544	SHAFT, PROP (INCLS 2-5)	93	F (LT1, M28, M29) (EXC J1F)	1	12568188
	7-C12	5.544	SHAFT, PROP (INCLS 2-5)	93	F (LT1, MD8, J1F) (EXPORT)	1	12568188
	7-C12	5.544	SHAFT, PROP (INCLS 2-5)	93	F (LT1, M28, M29, J1F) (EXPORT)	1	26041129
2.	7-C15	5.555	YOKE, PROP SHF SLIP (PART OF 1) (W/O VIBR DAMPER) (SAGINAW/AMERICAN)	93	F (LT1, MD8) (EXC J1F) (1ST DES)	1	7812557
	7-C15	5.555	YOKE, PROP SHF SLIP (PART OF 1)	93	F (LT1, M28, M29) (EXC J1F)	1	26039990
3.		N.S.	JOINT, PROP SHF UNIVERSAL (PART OF 1) (*KIT1)		.....		
4.	7-C16	5.560	RING, PROP SHF UJT SPIDER BRG RET (PART OF 1) (1.06" DIA) (SNAP RING) (SAGINAW/AMERICAN) (*KIT1) ..	93	F	2	5672924
5.		N.S.	TUBE, PROP SHF (PART OF 1) ..		.....		

SERVICE KITS

1.	7-C15	5.548	JOINT KIT, PROP SHF UNIVERSAL (INCLS 3, 4)	93	F (LT1) (EXC J1F)	1	12471502

RPO DEFINITIONS

J1F – BRAKE,SPECIAL(EXPORT)
LT1 – ENGINE–GAS, 8 CYL 5.7L(5.7P),MFI,HO
MD8 – TRANSMISSION,AUTOMATIC 4–SPEED(THM700R4/4L60)
M28 – TRANSMISSION MAN, 6 SPD, BORG WARNER, 85MM, 3.36 1ST, 1.35 3RD
M29 – TRANSMISSION MAN, 6 SPD, BORG WARNER, 85MM, 2.97 1ST, 1.44 3RD

cardiagn.com

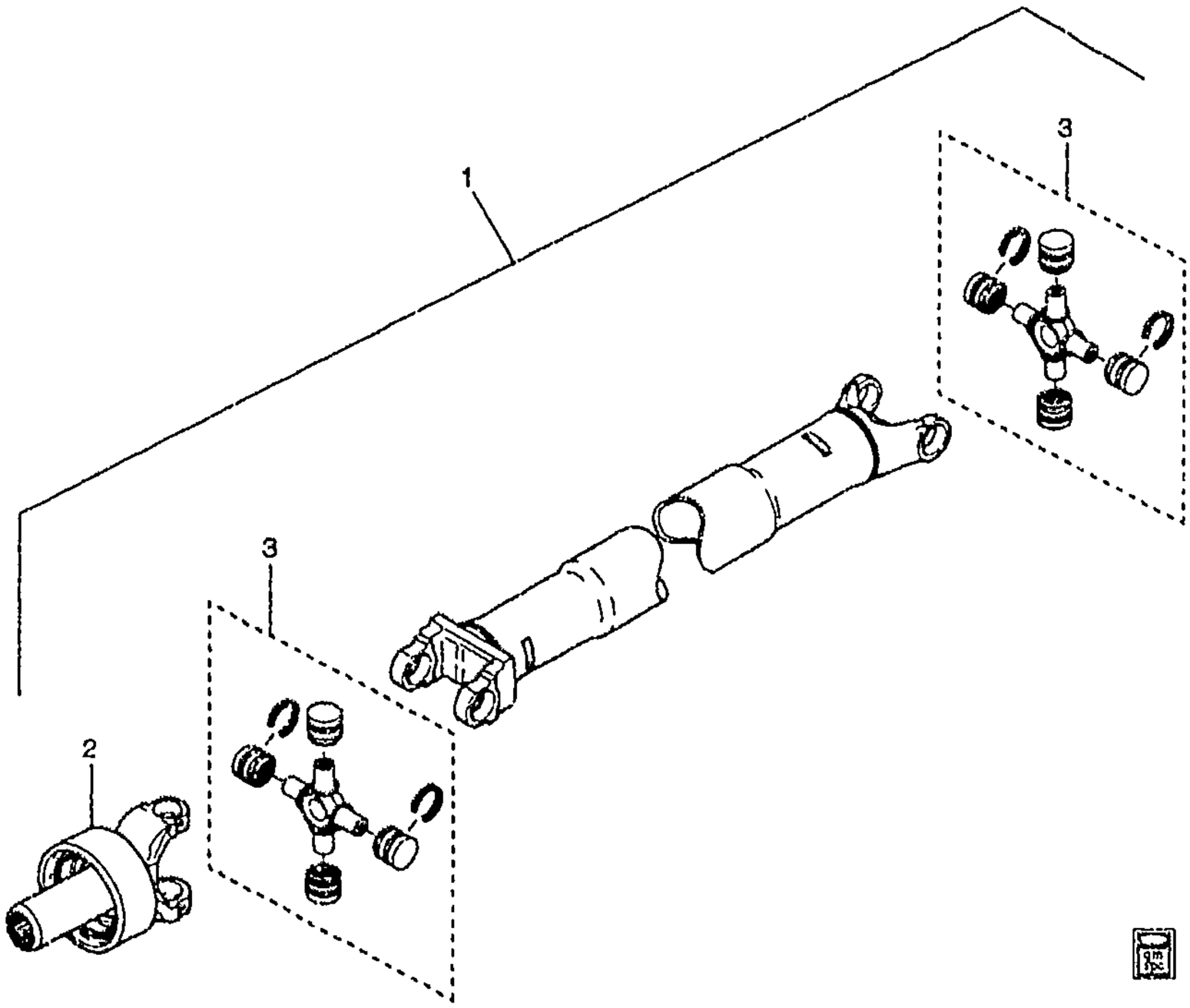

GM05-036

1993 F PROP SHAFT (LT1/5.7P)(2ND DES)
1994-1997 F PROP SHAFT (LT1/5.7P)

1.	7-C12	5.544	SHAFT, PROP	93	F (LT1, MD8) (EXC J1F)	1	12568188
	7-C12	5.544	SHAFT, PROP	93	F (LT1, M28, M29) (EXC J1F)	1	12568188
	7-C12	5.544	SHAFT, PROP	94	F (LT1, MM6) (EXC VG4)	1	12568188
	7-C12	5.544	SHAFT, PROP	94	F (LT1, M30) (EXC J1F)	1	12568188
	7-C12	5.544	SHAFT, PROP	95-97	F (LT1, MM6) (EXC VE2)	1	12568188
	7-C12	5.544	SHAFT, PROP	95-97	F (LT1, M30) (EXC VE2)	1	12568188
	7-C12	5.544	SHAFT, PROP	95-97	F (LT1, M30, VE2)	1	12568188
	7-C12	5.544	SHAFT, PROP	93	F (LT1, MD8, J1F) (EXPORT)	1	12568188
	7-C12	5.544	SHAFT, PROP	93	F (LT1, M28, M29, J1F) (EXPORT)	1	26041129
	7-C12	5.544	SHAFT, PROP	94	F (LT1, M30, J1F) (EXPORT)	1	12568188
	7-C12	5.544	SHAFT, PROP	97	F (LT1, MM6, VE2) (EXPORT)	1	12568188
2.	7-C15	5.555	YOKE, PROP SHF SLIP (W/VIBR DAMP)	93	F (LT1, MD8) (EXC J1F) (2ND DES)	1	26039762

cardiagn.com

	7-C15	5.555	YOKE, PROP SHF SLIP	93	F (LT1, M28, M29) (EXC J1F)	1	26039990
	7-C15	5.555	YOKE, PROP SHF SLIP (W/VIBR DAMP)	94	F (LT1, M30) (EXC J1F)	1	26039762
	7-C15	5.555	YOKE, PROP SHF SLIP	94	F (LT1, MM6)	1	26039990
	7-C15	5.555	YOKE, PROP SHF SLIP (W/VIBR DAMP)	95-97	F (LT1, M30)	1	26039762
	7-C15	5.555	YOKE, PROP SHF SLIP	95	F (LT1, MM6) (EXC VE2)	1	26039990
	7-C15	5.555	YOKE, PROP SHF SLIP	96-97	F (LT1, MM6)	1	26039990
3.	7-C15	5.548	JOINT KIT, PROP SHF UNIVERSAL	93	F (LT1) (EXC J1F)	1	12471502
	7-C15	5.548	JOINT KIT, PROP SHF UNIVERSAL	94	F (LT1, M30, MM6)	1	12471502
	7-C15	5.548	JOINT KIT, PROP SHF UNIVERSAL	95-97	F (LT1, M30, MM6) (EXC VE2)	1	12471502

RPO DEFINITIONS

J1F – BRAKE,SPECIAL(EXPORT)
LT1 – ENGINE–GAS, 8 CYL, 5.7L(5.7P),MFI,HO
MD8 – TRANSMISSION,AUTOMATIC 4–SPEED(THM700R4/4L60)
MM6 – TRANSMISSION MAN 6 SPD, BORG WARNER, 85MM, 1ST 2.66, 6TH 0.50, O/D
M28 – TRANSMISSION MAN, 6 SPD, BORG WARNER, 85MM, 3.36 1ST, 1.35 3RD
M29 – TRANSMISSION MAN, 6 SPD, BORG WARNER, 85MM, 2.97 1ST, 1.44 3RD
M30 – TRANSMISSION,AUTOMATIC 4 SPEED,4L60E,ELECTRONIC
VE2 – PROTECTOR SOURCE APPLIED
VG4 – PROTECTOR UNDERVEHICLE COMPOUND, CORROSION PREVENTIVE, WATER BASED, BLACK

cardiagn.com

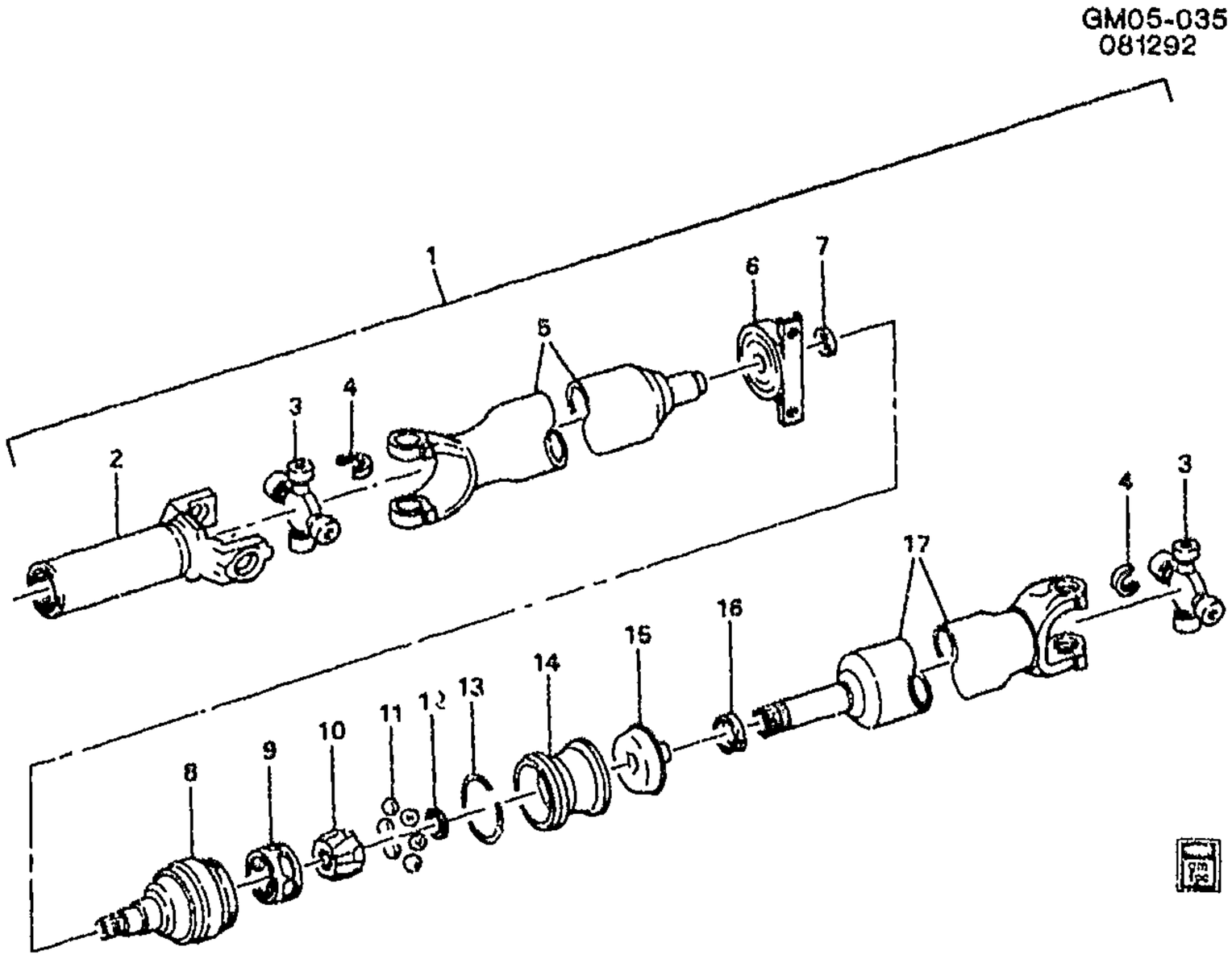

GM05-035

1993-1995 F PROP SHAFT (L32/3.4S)

1.	7-C12	5.544	**SHAFT**, PROP (INCLS 2--17)	93-95	F (L32)	1	12564000
2.	7--C15	5.555	**YOKE**, PROP SHF SLIP (PART OF 1, 5) (W/O VIBR DAMPER) (SAGINAW/AMERICAN)	93-94	F (L32) (EXC J1F)	1	7812557
	7-C15	5.555	**YOKE**, PROP SHF SLIP (PART OF 1, 5) (W/O VIBR DAMPER) (SAGINAW/AMERICAN)	95	F (L32)	1	7812557
3.		N.S.	**JOINT**, PROP SHF UNIVERSAL (PART OF 1, 5, 17)		.....		
4.		N.S.	**RING**, PROP SHF UJT SPIDER BRG RET (PART OF 1, 5, 17)		.....		
5.		N.S.	**SHAFT**, FRT PROP (INCLS 2-4) (PART OF 1)		.....		
6.		N.S.	**BEARING**, PROP SHF CTR SUPT (PART OF 1)		.....		
7.		N.S.	**SEAL**, RR PROP SHF (PART OF 1)		.....		
8.		N.S.	**JOINT**, PROP SHF UNIVERSAL (INCLS 9-12) (PART OF 1)		.....		
9.		N.S.	**CAGE**, C/G JOINT (PART OF 1, 8)		.....		
10.		N.S.	**RACE**, C/G JOINT INNER (PART OF 1, 8)		.....		
11.		N.S.	**BALL**, PROP SHF CV JT (PART OF 1, 8)		.....		
12.		N.S.	**SEAL**, O-RING (PART OF 1, 8 ..		.....		

cardiagn.com

13.	N.S.	**SEAL**, 0-RING (PART OF 1)	.....
14.	N.S.	**RETAINER**, BALL & SEAL (PART OF 1)	.....
15.	N.S.	**SEAL**, C/G JOINT (PART OF 1) ..	.....
16.	N.S.	**CLAMP**, PROP SHF RR SLIP YOKE BOOT (PART OF 1)	.....
17.	N.S.	**SHAFT**, RR PROP (INCLS 3, 4) (PART OF 1)	.....

RPO DEFINITIONS
J1F – BRAKE,SPECIAL(EXPORT)
L32 – ENGINE,3.4L,V6,(3.4S),SFI,OHV

cardiagn.com

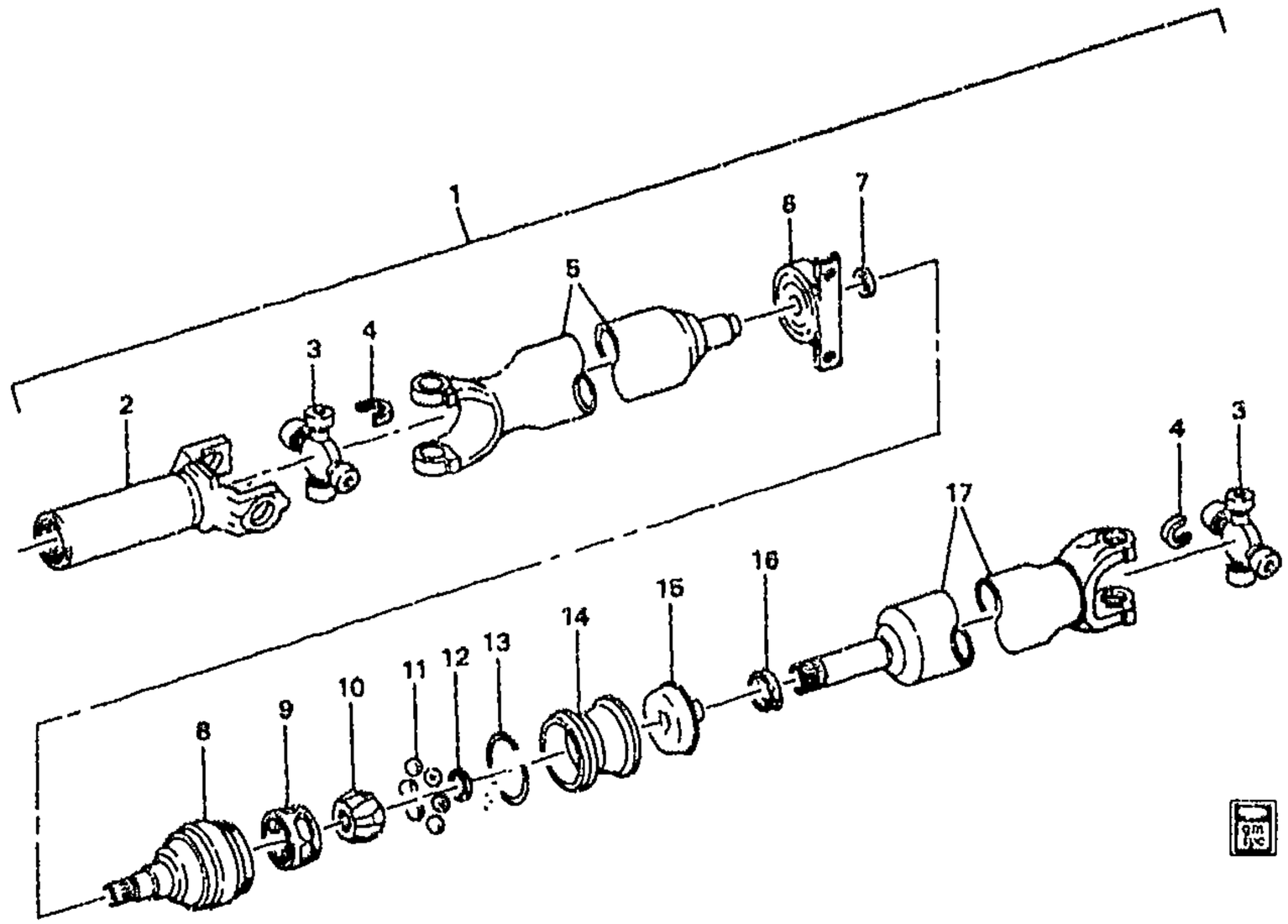

GM05-035F

1995-2002 F PROP SHAFT (L36/3.8K)

1.	7-C12	5.544	SHAFT, PROP (INCLS 2-17, KIT 1)	95-97	F (L36) (EXC VE2)	1	12564000
	7-C12	5.544	SHAFT, PROP (INCLS 2-17, KIT 1) (1 BLACK STRIPE, 1 BROWN STRIPE) (UNPAINTED)	98	F (L36, M30) (EXC VE2)	1	12556670
	7-C12	5.544	SHAFT, PROP (INCLS 2-17, KIT 1)	98	F (L36, M49, VE2)	1	12564000
	7-C12	5.544	SHAFT, PROP (INCLS 2-17, KIT 1)	98	F (L36, M49, VE2) (2ND DES)	1	12568188
	7-C12	5.544	SHAFT, PROP (INCLS 2-17, KIT 1) (1 BLACK STRIPE, 1 BROWN STRIPE) (UNPAINTED)	99	F (L36, M30, M49) (EXC VE2)	1	12556670
	7-C12	5.544	SHAFT, PROP (INCLS 2-17, KIT 1)	00-02	F (L36, M30, M49, QII, VE2)	1	12564000
	7-C12	5.544	SHAFT, PROP (INCLS 2-17, KIT 1)	00-02	F (L36, M30, M49) (EXC VE2)	1	12568187
	7-C12	5.544	SHAFT, PROP (INCLS 2-17, KIT 1)	00-02	F (L36, M30, M49, VE2)	1	12568188
	7-C12	5.544	SHAFT, PROP (INCLS 2-17, KIT 1)	99	F (L36, M30, M49, QII, VE2) (EXPORT)	1	12564000
	7-C12	5.544	SHAFT, PROP (INCLS 2-17, KIT 1)	99	F (L36, M30, M49, VE2) (EXPORT)	1	12568188
	7-C12	5.544	SHAFT, PROP (FOR 1ST DESIGN SEE 12564000) (INCLS 2-17, KIT 1) (ONE PIECE)	98	F (L36, M30, VE2) (2ND DES) (EXPORT)	1	12568188

cardiagn.com

	7-C12	5.544	SHAFT, PROP (FOR 2ND DESIGN SEE 12568188) (INCLS 2-17, KIT 1) (W/TWO PIECE)	98	F (L36, M30, VE2) (1ST DES) (EXPORT)	1	12564000
2.	7-C15	5.555	YOKE, PROP SHF SLIP (PART OF 1, 5) (W/O VIBR DAMPER) (SAGINAW/AMERICAN)	95-97	F (L36)	1	7812557
	7-C15	5.555	YOKE, PROP SHF SLIP (PART OF 1, 5) (W/O VIBR DAMPER) (SAGINAW/AMERICAN)	98	F (L36, M49)	1	7812557
	7-C15	5.555	YOKE, PROP SHF SLIP (PART OF 1, 5)	98	F (L36, M30)	1	26061475
	7-C15	5.555	YOKE, PROP SHF SLIP (PART OF 1, 5) (W/O VIBR DAMPER) (SAGINAW/AMERICAN)	99	F (L36, M30, M49, QII, VE2)	1	7812557
	7-C15	5.555	YOKE, PROP SHF SLIP (PART OF 1, 5) (W/O VIBR DAMPER) (SAGINAW/AMERICAN)	09	F (L36, VE2)	1	7812557
	7-C15	5.555	YOKE, PROP SHF SLIP (PART OF 1, 5)	99	F (L36, M30, M49)	1	26061475
	7-C15	5.548	JOINT KIT, PROP SHF UNIVERSAL (PART OF 1, 5)	00-02	F (LS1, L36)	1	12471502
		N.S.	JOINT KIT, PROP SHF RR UNIVERSAL (PART OF 1, 5)	95-99	.....		
3.		N.S.	JOINT, PROP SHF UNIVERSAL (PART OF 1, 5, 17) (*KIT1)		.....		
4.	7-C16	5.560	RING, PROP SHF UJT SPIDER BRG RET (PART OF 1, 5, 17) (1.06" DIA) (SNAP RING) (SAGINAW/AMERICAN) (*KIT1) ..	95-97	F	2	5672024
		N.S.	RING, PROP SHF UJT SPIDER BRG RET (PART OF 1, 5, 17) (*KIT1)	98-02	.....		
5.		N.S.	SHAFT, FRT PROP (INCLS 2, 3, 4) (PART OF 1)		.....		
6.		N.S.	BEARING, PROP SHF CTR SUPT (PART OF 1)		.....		
7.		N.S.	SEAL, RR PROP SHF (PART OF 1)		.. ..		
8.		N.S.	JOINT, PROP SHF UNIVERSAL (INCLS 9-12) (PART OF 1)		.....		
9.		N.S.	CAGE, C/G JOINT (PART OF 1, 8)		.....		
10.		N.S.	RACE, C/G JOINT INNER (PART OF 1, 8)		.....		
11.		N.S.	BALL, PROP SHF CV JT (PART OF 1)		.....		
12.		N.S.	SEAL, O-RING (PART OF 1, 8) ..		....		
13.		N.S.	SEAL, 0-RING (PART OF 1)		.....		
14.		N.S.	RETAINER, BALL & SEAL CG (PART OF 1)		.....		
15.		N.S.	SEAL, C/G JOINT (PART OF 1) ..		.....		
16.		N.S.	CLAMP, PROP SHF RR SLIP YOKE BOOT (PART OF 1)		....		
17.		N.S.	SHAFT, RR PROP (INCLS 3, 4) (PART OF 1)		.....		

cardiagn.com

SERVICE KITS

1.	N.S.	JOINT KIT, PROP SHF UNIVERSAL (INCLS 3, 4) (PART OF 1)	.....

RPO DEFINITIONS

LS1 – ENGINE GAS, 8 CYL, 5.7L, SFI, ALUMINUM ENGINE
L36 – ENGINE GAS, 6 CYL, 3.8K, MFI, V6, HO (ERV6 SERIES)
M30 – TRANSMISSION,AUTOMATIC 4 SPEED,4L60E,ELECTRONIC
M49 – TRANSMISSION MAN 5 SPD, BORG WARNER, 77MM, 3.75 1ST, .76 5TH, O/D
QII – TIRE ALL P215/60R16 BW R/PE ST TL AL3 94H
VE2 – PROTECTOR SOURCE APPLIED

cardiagn.com

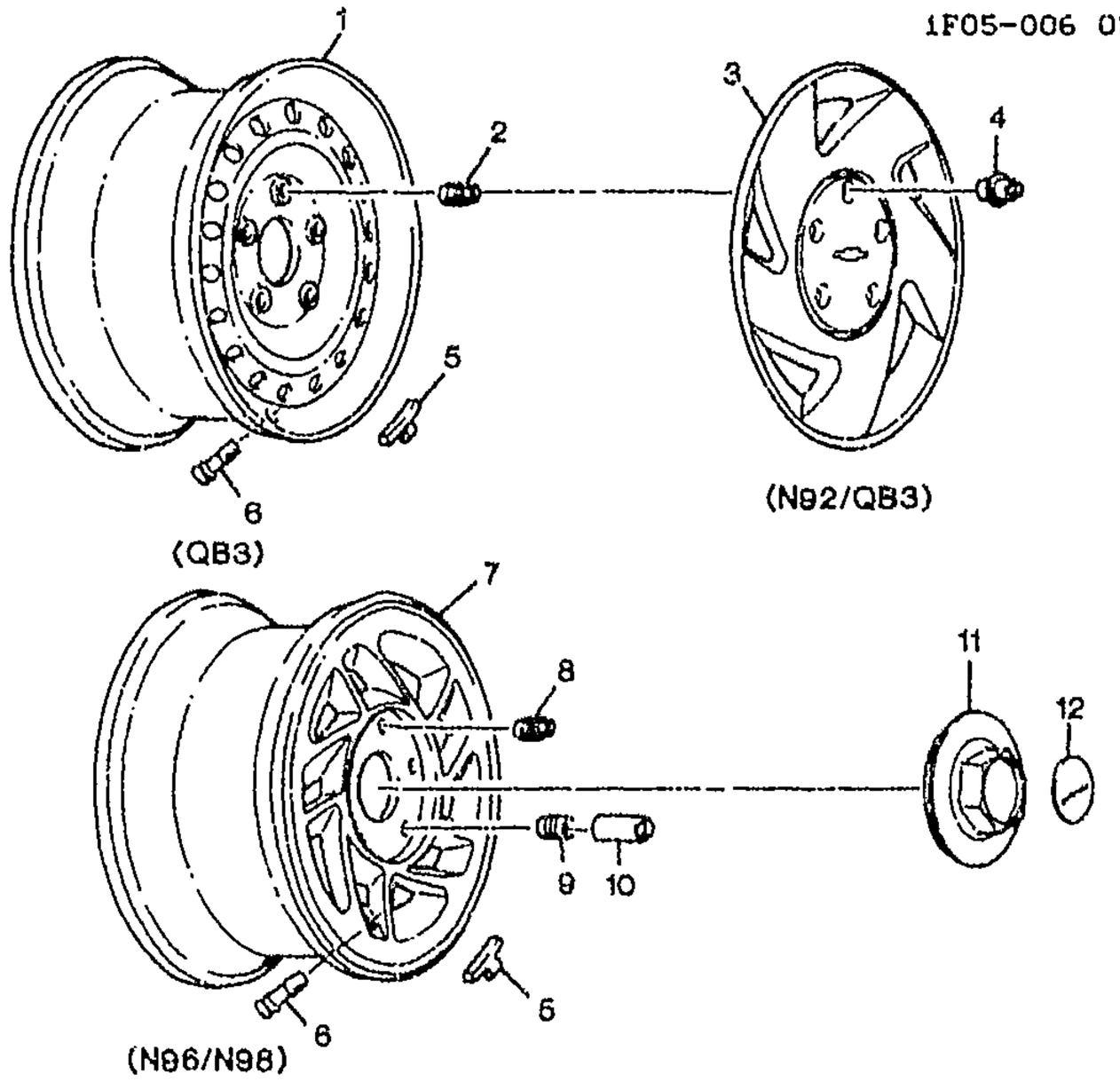

1F05-0061

1993-1996 F WHEELS & WHEEL COVERS

1.	7-C17	5.803	WHEEL, 16X7.5	93-96	F (QB3)	4	9591850
2.	7-C22	5.813	NUT, WHL. (M12X1.5 INT THD) (M24X2 EXT THD)	93-96	F (QB3)	20	10194314
	7-C22	5.813	NUT, WHL (M12X1.5)	95-96	F (N98)	16	22526184
3.	7-C23	5.858	COVER, WHL TR (INCLS 4) (CODE JAZ) (CODE DPA)	93-94	F (QB3)	4	9593558
	7-C23	5.858	COVER, WHL TR (INCLS 4) (CODE JAZ) (CODE TGS)	95-96	F (N92)	4	9593558
4.	7-C22	5.813	CAP, WHL NUT (PART OF 3) (DK CHARCOAL) (M24X2)	93-94	F (QB3)	20	21010626
	7-C22	5.813	CAP, WHL NUT (PART OF 3) (DK CHARCOAL) (M24X2)	95-96	F (N92)	20	21010626
5.	7-C18	5.805	WEIGHT, WHL BAL (0.25 OZ) (W/PROTECTIVE COATING, ALUM WHL CAST OR PAINTED)	93-96	F (N96)	AR	9591670
	7-C18	5.805	WEIGHT, WHL BAL (0.25 OZ) (W/PROTECTIVE COATING, ALUM WHL CAST OR PAINTED)	95-96	F (N98)	AR	9591670
	7-C18	5.805	WEIGHT, WHL BAL (0.25 OZ) (STEEL WHL) (USED ON CURVED RIM FLG) (W/PROTECTIVE COATING)	93	F	AR	9591987
	7-C18	5.805	WEIGHT, WHL BAL (0.25 OZ) (STEEL WHL) (USED ON CURVED RIM FLG) (W/PROTECTIVE COATING)	94-96	F (QB3)	AR	9591987

cardiagn.com

	7-C18	5.805	WEIGHT, WHL BAL (0.5 OZ) (W/PROTECTIVE COATING, ALUM WHL CAST OR PAINTED) .	93-96	F	AR	9591584
	7-C18	5.805	WEIGHT, WHL BAL (0.5 OZ) (.5 OZ) (W/PROTECTIVE COATING) .	94-96	F (QB3)	AR	9591820
	7-C18	5.805	WEIGHT, WHL BAL (0.75 OZ) (W/PROTECTIVE COATING, ALUM WHL CAST OR PAINTED) .	93-96	F (N96)	AR	9591585
	7-C18	5.805	WEIGHT, WHL BAL (0.75 OZ) (W/PROTECTIVE COATING, ALUM WHL CAST OR PAINTED) .	95-96	F (N98)	AR	9591585
	7-C18	5.805	WEIGHT, WHL BAL (1.0 OZ.) ((1.0 OZ.)) (W/PROTECTIVE COATING)	93-96	F (QB3)	AR	9591822
		N.S.	WEIGHT, WHL BAL (1.25 OZ)		.....		
	7-C18	5.805	WEIGHT, WHL BAL (1.5 OZ) (W/PROTECTIVE COATING, ALUM WHL CAST OR PAINTED) .	93-96	F (N96)	AR	9591379
	7-C18	5.805	WEIGHT, WHL BAL (1.5 OZ) (W/PROTECTIVE COATING)	93-96	F (QB3)	AR	9591824
	7-C18	5.805	WEIGHT, WHL BAL (1.5 OZ) (W/PROTECTIVE COATING, ALUM WHL CAST OR PAINTED) .	95-96	F (N98)	AR	9591379
		N.S.	WEIGHT, WHL BAL (2.25 OZ)		.....		
	7-C18	5.805	WEIGHT, WHL BAL (2.25 OZ) (W/PROTECTIVE COATING, ALUM WHL CAST OR PAINTED) .	93-96	F (N96)	AR	9591382
	7-C18	5.805	WEIGHT, WHL BAL (2.25 OZ) (W/PROTECTIVE COATING, ALUM WHL CAST OR PAINTED) .	95-96	F (N98)	AR	9591382
6.	7-C23	5.875	STEM, TIRE VLV (.453 HOLE, 1.25 LONG)	93-96	F	4	274288
7.	7-C17	5.803	WHEEL, 16X8	93	F (B5A, N96)	4	12513703
	7-C17	5.803	WHEEL, 16X8 (SPKL SILVER) (STAMPED ACF OR AHU)	93	F (N96) (EXC B5A)	4	12517627
	7-C17	5.803	WHEEL, 16X8	94	F (N96, 40P)	4	12513703
	7-C17	5.803	WHEEL, 16X8 (SPKL SILVER) (STAMPED ACF CR AHU)	94	F (N96, 17P)	4	12517627
	7-C17	5.803	WHEEL, 16X8 (16 X 8) (CODE RHY)	95-96	F (N98)	4	12361451
	7-C17	5.803	WHEEL, 16X8 (SPKL SILVER) (STAMPED ACF OR AHU)	95-96	F (N96)	4	12517627
8.	7-C22	5.813	NUT, WHL (M12X1.5)	93-96	F (N96)	16	22526184
	7-C22	5.813	NUT, WHL (M12X1.5)	95-96	F (N98)	16	22526184
9.		N.S.	NUT, SPL SECURITY WHL LK (FOR INDIVIDUAL REPLACEMENT OF LOCK NUT OR WRENCH CALL AMCOR INC. 800-831-9604 OR 313-458-8920. CORRECT CODES OF THE NUT & WRENCH ARE REQ.)		.....		

cardiagn.com

							1F05-0061
10.		N.S.	WRENCH KIT, SPL SECURITY WHL LK NUT (FOR INDIVIDUAL. REPLACEMENT OF LOCK NUT OR WRENCH CALL AMCOR INC. 800-831-9604 OR 313-458-8920. CORRECT CODES OF THE NUT & WRENCH ARE REQ.)		.....		
11.	7-C23	5.8[illegible]8	CAP, HUB (INCLS 12)	93-96	F (N96)	4	10119598
	7-C23	5.8[illegible]8	CAP, HUB (INCLS 12)	95-96	F (N98)	4	10119598
12.		N.S.	INSERT, HUB CAP (PART OF 11)		.....		

RPO DEFINITIONS

B5A – PACKAGE – "INDY COUPE"
N92 – COVER WHEEL,BOLT ON
N96 – WHEEL.16X8(CAST ALUMINUM)
N98 – WHEEL,CHROME,VAR 2
QB3 – WHEEL 16 X 7.5, STEEL
17P – WHEEL COLOR–SILVER
40P – WHEEL COLOR,WHITE

cardiagn.com

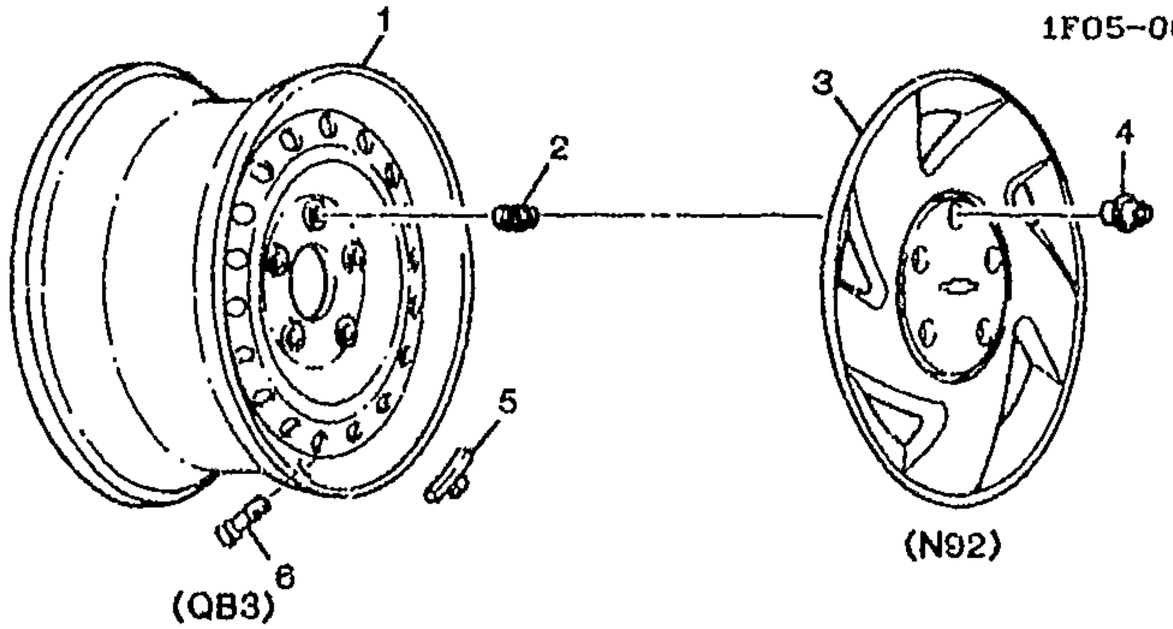

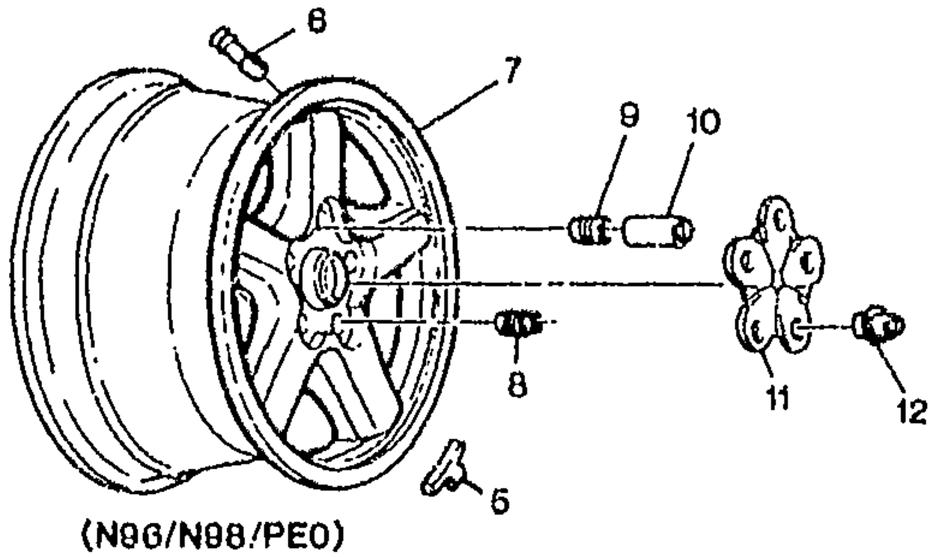

1F05-0021

1997 F WHEELS & WHEEL COVERS

1.	7-C17	5.803	WHEEL, 16X7.5	97 F (QB3)	4	9593446
2.	7-C22	5.813	NUT, WHL (M12X1.5 INT THD) (M24X2 EXT THD)	97 F (QB3)	20	10194314
3.	7-C23	5.858	COVER, WHL TR (INCL 4) (CODE JAZ) (CODE TGS)	97 F (N92)	4	9593558
4.	7-C22	5.813	CAP, WHL NUT (PART OF 3) (DK CHARCOAL) (M24X2)	97 F	20	21010626
5.	7-C18	5.805	WEIGHT, WHL BAL (0.25 OZ) (W/PROTECTIVE COATING, ALUM WHL CAST OR PAINTED)	97 F (N96)	AR	9591670
	7-C18	5.805	WEIGHT, WHL BAL (0.25 OZ) (W/PROTECTIVE COATING, ALUM WHL CAST OR PAINTED)	97 F (N98)	AR	9591670
	7-C18	5.805	WEIGHT, WHL BAL (0.25 OZ) (STEEL WHL) (USED ON CURVED RIM FLG) (W/PROTECTIVE COATING)	97 F (QB3)	AR	9591987
	7-C18	5.805	WEIGHT, WHL BAL (0.5 OZ) (W/PROTECTIVE COATING, ALUM WHL CAST OR PAINTED)	97 F	AR	9591584
	7-C18	5.805	WEIGHT, WHL BAL (0.5 OZ) (.5 OZ) (W/PROTECTIVE COATING)	97 F (QB3)	AR	9591820
	7-C18	5.805	WEIGHT, WHL BAL (0.75 OZ) (W/PROTECTIVE COATING, ALUM WHL CAST OR PAINTED)	97 F (N96)	AR	9591585

cardiagn.com

	7-C18	5.805	**WEIGHT**, WHL BAL (0.75 OZ) (W/PROTECTIVE COATING, ALUM WHL CAST OR PAINTED) .	97	F (N98)	AR	9591585
	7-C18	5.805	**WEIGHT**, WHL BAL (1.0 OZ.) ((1.0 OZ)) (W/PROTECTIVE COATING)	97	F (QB3)	AR	9591822
		N.S.	**WEIGHT**, WHL BAL (1.25 OZ)				
	7-C18	5.805	**WEIGHT**, WHL BAL (1.5 OZ) (W/PROTECTIVE COATING, ALUM WHL CAST OR PAINTED) .	97	F (N96)	AR	9591379
	7-C18	5.805	**WEIGHT**, WHL BAL (1.5 OZ) (W/PROTECTIVE COATING)	97	F (QB3)	AR	9591824
	7-C18	5.805	**WEIGHT**, WHL BAL (1.5 OZ) (W/PROTECTIVE COATING, ALUM WHL CAST OR PAINTED) .	97	F (N98)	AR	9591379
		N.S.	**WEIGHT**, WHL BAL (2.25 OZ)				
	7-C18	5.805	**WEIGHT**, WHL BAL (2.25 OZ) (W/PROTECTIVE COATING, ALUM WHL CAST OR PAINTED) .	97	F (N96)	AR	9591382
	7-C18	5.805	**WEIGHT**, WHL BAL (2.25 OZ) (W/PROTECTIVE COATING, ALUM WHL CAST OR PAINTED) .	97	F (N98)	AR	9591382
6.	7-C23	5.875	**STEM**, TIRE VLV (.453 HOLE, 1.25 LONG)	97	F	4	274288
7.	7-C17	5.803	**WHEEL**, 16X8 (INCLS VLV 9427575) (SPARKLE SILVER) (5X120.65, 55MM OS) (CODE RKK)	97	F (N96)	4	12363781
	7-C17	5.803	**WHEEL**, 16X8 (INCLS VLV 9427575) (CHROME) (5X120.65, 55MM OS) (CODE RLT)	97	F (N98)	4	12363782
	7-C17	5.803	**WHEEL**, 16X8 (INCLS VLV 9427575) (ARCTIC WHITE) (5X120.65, 55MM OS) (CODE RML)	97	F (PE0)	4	12363783
8.	7-C22	5.813	**NUT**, WHL (M12X1.5 INT THD) (M24X2 EXT THD)	97	F (N96, N98, PE0)	20	10194314
9.		N.S.	**NUT**, SPL SECURITY WHL LK (FOR INDIVIDUAL REPLACEMENT OF LOCK NUT OR WRENCH CALL AMCOR INC. 800-831-9604 OR 313-458-8920. CORRECT CODES OF THE NUT & WRENCH ARE REQ.)				
10.		N.S.	**WRENCH KIT**, SPL SECURITY WHL LK NUT (FOR INDIVIDUAL REPLACEMENT OF LOCK NUT OR WRENCH CALL AMCOR INC. 800--831-9604 OR 313-458--8920. CORRECT CODES OF THE NUT & WRENCH ARE REQ.)				
11.	7-C23	5.858	**CAP**, HUB	97	F (N96)	4	9592606
	7-C23	5.858	**CAP**, HUB	97	F (N98)	4	9592666
	7-C23	5.858	**CAP**, HUB	97	F (PE0)	4	9592760
12.	7-C22	5.813	**CAP**, WHL NUT	97	F	20	21011331

cardiagn.com

RPO DEFINITIONS

N92 – COVER WHEEL,BOLT ON
N96 – WHEEL,16X8(CAST ALUMINUM)
N98 – WHEEL,CHROME,VAR 2
PE0 – WHEEL,16X8,ALUM,LT WEIGHT 30TH ANNIVERSARY
QB3 – WHEEL 16 X 7.5, STEEL

cardiagn.com

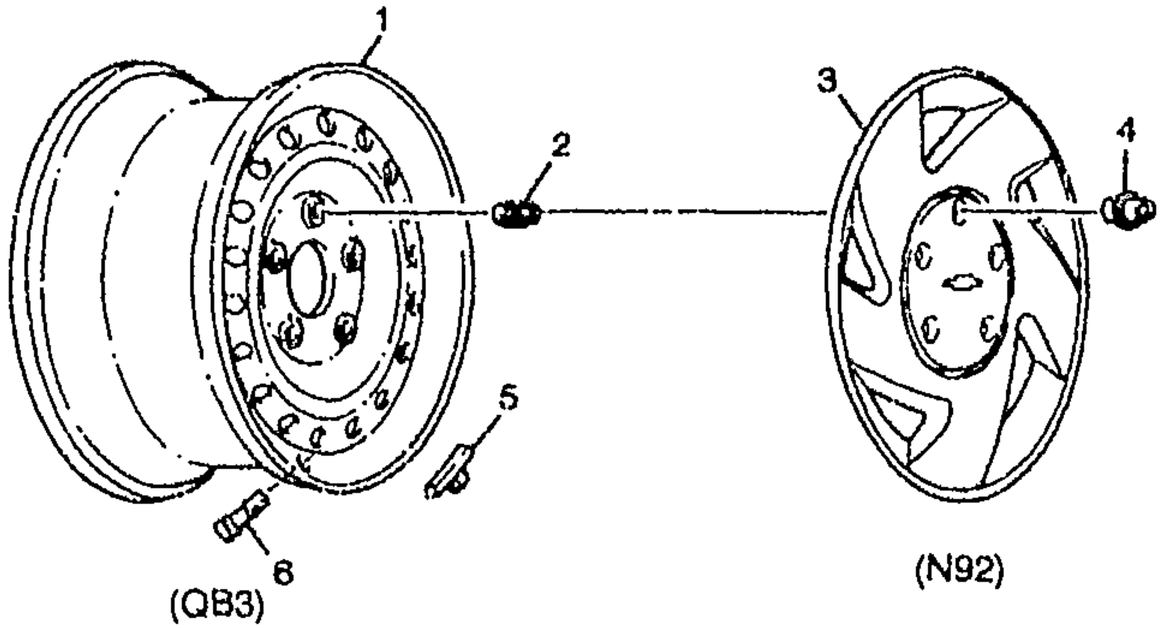

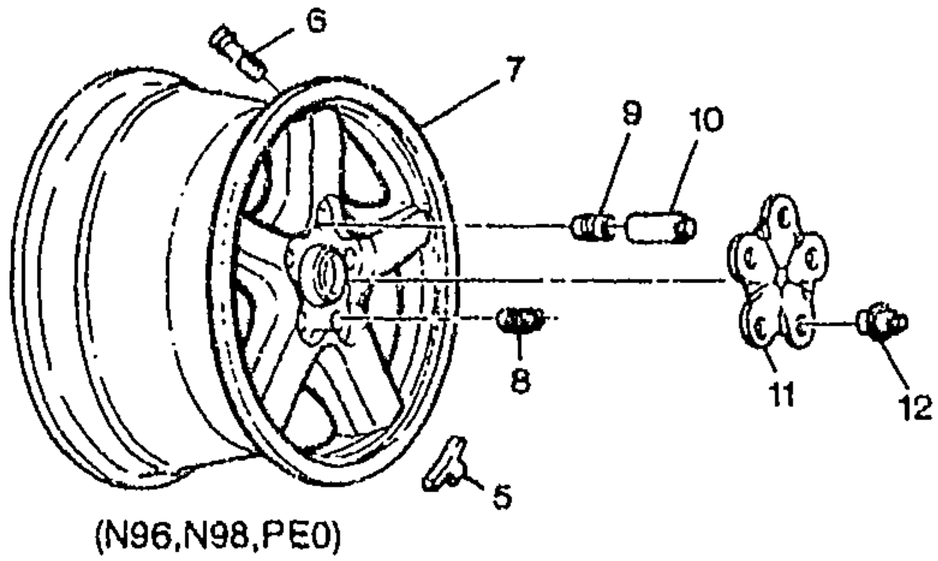

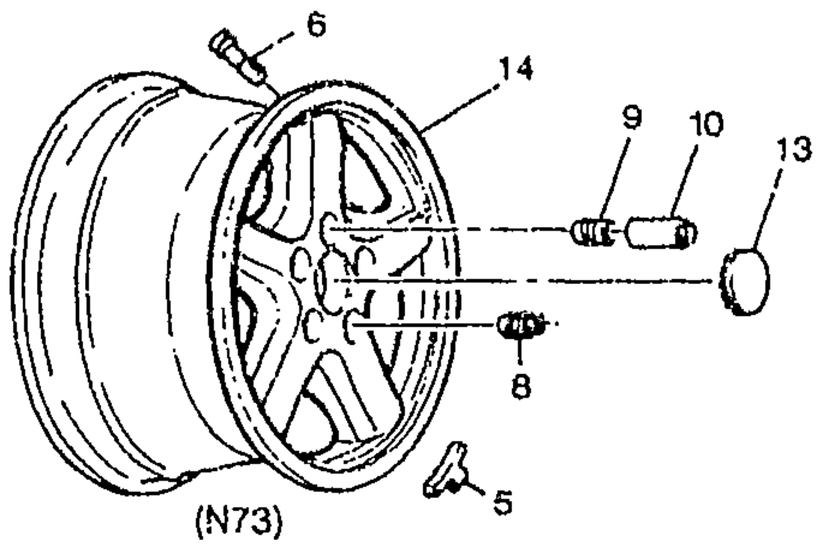

1F05-0081

1998-2002 F WHEELS & WHEEL COVERS

1.	7-C17	5.803	WHEEL, 16X7.5	98-02	F (QB3)	4	9593557
2.	7-C22	5.813	NUT, WHL (M12X1.5 INT THD) (M24X2 EXT THD)	98-02	F (QB3)	20	10194314
	7-C22	5.813	NUT, WHL (M12X1.5 INT THD) (M24X2 EXT THD)	01-02	F (PW7)	16	10194314
3.	7-C23	5.858	COVER, WHL TR (INCL 4) (CODE JAZ)	98-00	F (N92)	4	9593558
	7-C23	5.858	COVER, WHL TR (INCL 4)	01-02	F (N92)	4	9594562

cardiagn.com

							1F05-0081
4.	7-C22	5.813	CAP, WHL NUT (PART OF 3) (DK CHARCOAL) (M24X2)	98-02	F	20	21010626
5.	7-C18	5.805	WEIGHT, WHL BAL (0.25 OZ) (W/PROTECTIVE COATING, ALUM WHL CAST OR PAINTED) .	96-02	F (6)	AR	9591670
	7-C18	5.805	WEIGHT, WHL BAL (0.25 OZ) (W/PROTECTIVE COATING, ALUM WHL CAST OR PAINTED) .	98-99	F (N98)	AR	9591670
	7-C18	5.805	WEIGHT, WHL BAL (0.25 OZ) (STEEL WHL) (USED ON CURVED RIM FLG) (W/PROTECTIVE COATING)	98-02	F (QB3)	AR	9591937
	7-C18	5.805	WEIGHT, WHL BAL (1.75 OZ) (W/PROTECTIVE COATING, ALUM WHL CAST OR PAINTED) .	98-02	F	AR	9591380
	7-C18	5.805	WEIGHT, WHL BAL (1.75 OZ) (W/PROTECTIVE COATING, ALUM WHL CAST OR PAINTED) .	01-02	F (N73, N96, PW7)	AR	9591380
	7-C18	5.805	WEIGHT, WHL BAL (1.75 OZ) (W/PROTECTIVE COATING)	01-02	F (QB3)	AR	9591825
	7-C18	5.805	WEIGHT, WHL BAL (1.75 OZ) (1.0 OZ.) (W/PROTECTIVE COATING)	98-02	F (QB3)	AR	9591822
	7-C18	5.805	WEIGHT, WHL BAL (0.75 OZ) (W/PROTECTIVE COATING, ALUM WHL CAST OR PAINTED) .	98-02	F (N96)	AR	9591585
	7-C18	5.805	WEIGHT, WHL BAL (0.75 OZ) (W/PROTECTIVE COATING, ALUM WHL CAST OR PAINTED) .	98-99	F (N98)	AR	9591585
	7-C18	5.805	WEIGHT, WHL BAL (0.75 OZ) (W/PROTECTIVE COATING)	98-02	F (QB3)	AR	9591821
	7-C18	5.805	WEIGHT, WHL BAL (0.75 OZ) (ALUM WHL)	99	F	AR	9591583
	7-C18	5.805	WEIGHT, WHL BAL (W/PROTECTIVE COATING, ALUM WHL CAST OR PAINTED) .	02	F (N73, N96, PW7)	AR	9591378
	7-C18	5.805	WEIGHT, WHL BAL (1.0 OZ.) (W/PROTECTIVE COATING)	98-02	F (QB3)	AR	9591822
		N.S.	WEIGHT, WHL BAL (1.25 OZ)		.....		
	7-C18	5.805	WEIGHT, WHL BAL (1.5 OZ) (W/PROTECTIVE COATING, ALUM WHL CAST OR PAINTED) .	98	F (N96)	AR	9591379
	7-C18	5.805	WEIGHT, WHL BAL (1.5 OZ) (W/PROTECTIVE COATING)	98-02	F (QB3)	AR	9591824
	7-C18	5.805	WEIGHT, WHL BAL (1.5 OZ) (MT ON I/S ONLY)	99	F (N73)	AR	9591363
	7-C18	5.805	WEIGHT, WHL BAL (1.5 OZ) (W/PROTECTIVE COATING, ALUM WHL CAST OR PAINTED) .	99	F (N96, N98)	AR	9591379
	7-C18	5.805	WEIGHT, WHL BAL (1.5 OZ) (W/PROTECTIVE COATING, ALUM WHL CAST OR PAINTED) .	00-02	F (N73, N96, PW7)	AR	9591379
		N.S.	WEIGHT, WHL BAL (2.25 OZ)		.....		
	7-C18	5.805	WEIGHT, WHL BAL (2.25 OZ) (W/PROTECTIVE COATING, ALUM WHL CAST OR PAINTED) .	98-02	F (N96)	AR	9591382
	7-C18	5.805	WEIGHT, WHL BAL (2.25 OZ) (W/PROTECTIVE COATING, ALUM WHL CAST OR PAINTED)	98	F (N98)	AR	9591382

cardiagn.com

	7-C18	5.805	**WEIGHT**, WHL BAL (2.25 OZ) (W/PROTECTIVE COATING, ALUM WHL CAST OR PAINTED) .	98-99	F (N73, N96, N98)	AR	9591382
	7-C18	5.805	**WEIGHT**, WHL BAL (2.25 OZ) (W/PROTECTIVE COATING, ALUM WHL CAST OR PAINTED) .	00-02	F (N73, N96, PW7)	AR	9591382
6.	7-C23	5.875	**STEM**, TIRE VLV (.453 HOLE, 1.25 LONG)	98-02	F	4	274288
7.	7-C17	5.803	**WHEEL**, 16X8	00-01	F (N96)	4	9593458
	7-C17	5.803	**WHEEL**, 16X8	00	F (PW7)	4	9593458
	7-C17	5.803	**WHEEL**, 16X8 (INCLS VLV 9427575) (SPARKLE SILVER) (5X120.65, 55MM OS) (CODE RKIQ)	98-99	F (N96)	4	12363781
	7-C17	5.803	**WHEEL**, 16X8 (INCLS VLV 9427575) (CHROME) (5X120.65, 55MM OS) (CODE RLT)	98-02	F (N98)	4	12363782
8.	7-C22	5.813	**NUT**, WHL (M12X1.5 INT THD) (M24X2 EXT THD)	98-02	F (N73, N96, N98)	20	10194314
	7-C22	5.813	**NUT**, WHL (M12X1.5 INT THD) (M24X2 EXT THD)	01-02	F (PW7)	16	10194314
9.		N.S.	**NUT**, SPL SECURITY WHL LK (FOR INDIVIDUAL REPLACEMENT OF LOCK NUT OR WRENCH CALL AMCOR INC. 800-831-9604 OR 313-458-8920. CORRECT CODES OF THE NUT & WRENCH ARE REQ.)		.....		
10.		N.S.	**WRENCH KIT**, SPL SECURITY WHL LK NUT (FOR INDIVIDUAL REPLACEMENT OF LOCK NUT OR WRENCH CALL AMCOR INC. 800-831-9604 OR 313-458-8920. CORRECT CODES OF THE NUT & WRENCH ARE REQ.)		.....		
11.	7-C23	5.858	**CAP**, HUB	96-99	F (N96)	4	9592606
	7-C23	5.858	**CAP**, HUB	98-00	F (N98)	4	9592666
	7-C23	5.858	**CAP**, HUB (POLISHED) (BOWTIE)	00	F (PW7)	4	9593462
	7-C23	5.858	**CAP**, HUB	01-02	F (PW7)	4	9594329
12.	7-C22	5.813	**CAP**, WHL NUT	98-99	F (N96, N98)	20	21011331
	7-C22	5.813	**CAP**, WHL NUT	00-02	F (N98)	20	21011331
13.	7-C23	5.858	**CAP**, HUB (BOWTIE EMBLEM) ...	98-99	F (N73)	4	9593596
	7-C23	5.858	**CAP**, HUB (POLISHED) (BOWTIE)	00	F (PW7)	4	9593462
	7-C23	5.858	**CAP**, HUB	01-02	F (PW7)	4	9594329
14.	7-C17	5.803	**WHEEL**, 17X9 (SILVER)	98-99	F (N73)	4	9592881
	7-C17	5.803	**WHEEL**, 17X9 (50MM O/S)	00-02	F (N73)	4	9593464

RPO DEFINITIONS

N73 – WHEEL,CUSTOM SPORT 16X7
N92 – COVER WHEEL,BOLT ON
N96 – WHEEL,16X8(CAST ALUMINUM)
N98 – WHEEL,CHROME,VAR 2
PW7 – WHEEL,16X8,STYLED(ALUMINUM)(SUPERLIGHT)
QB3 – WHEEL,16 X 7.5, STEEL

cardiagn.com

ILLUSTRATION INDEX

	TITLE	GRID
1993–2002	F87 SUSPENSION/FRONT	7–K4
1994–2002	F67 SUSPENSION/FRONT	7–K13
1993	F STEERING GEAR ASM POWER	7–K22
1994–2002	F STEERING GEAR ASM POWER	7–K25
1993–2002	F STEERING WHEEL & HORN PARTS	7–L2
1993–2002	F STEERING SYSTEM & RELATED PARTS	7–L4
1993–1996	F STEERING COLUMN	7–L10
1997–2002	F STEERING COLUMN/TILT (SIR,PASS KEY,FLOOR SHIFT	7–L15
1993–1995	F STEERING PUMP ASM (L32/3.4S)	7–L20
1993–1997	F STEERING PUMP ASM (LT1/5.7P)	7–L22
1995–2002	F STEERING PUMP ASM (L36/3.8K)	7–L24
1998–2002	F STEERING PUMP ASM (LS1/5.7G)	7–L26
1993–1995	F STEERING PUMP MOUNTING (L32/3.4S)	7–L28
1993–1997	F STEERING PUMP MOUNTING (LT1/5.7P)	7–M2
1993–1995	F STEERING PUMP LINES (L32/3.4S)	7–M3
1993–1997	F STEERING PUMP LINES (LT1/5.7P)	7–M4
1995–1997	F STEERING PUMP LINES AND PUMP MTG (L36/3.8K)	7–M6
1998–2002	F STEERING PUMP LINES AND PUMP MTG (LS1/5.7G)(EXC V12)	7–M8
1999–2002	F STEERING PUMP LINES AND PUMP MTG (LS1/5.7G)(V12)	7–M10
1998–2002	F STEERING PUMP LINES AND PUMP MTG (L36/3.8K)	7–M12

cardiagn.com

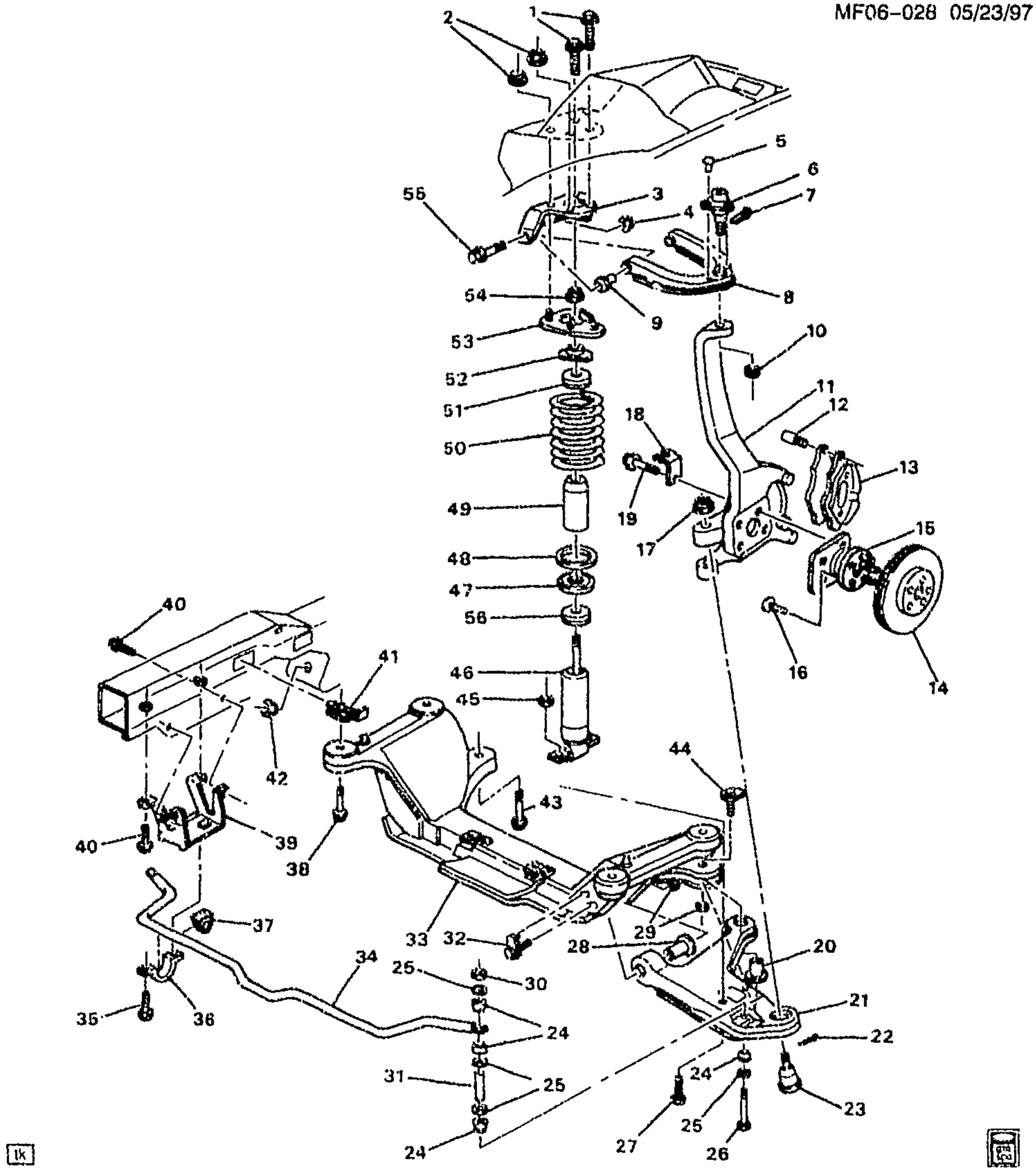

MF06-028

1993-2002 F87 SUSPENSION/FRONT

1.	7-N23	7.347	BOLT, FRT S/ABS UPR MT (M10X1.5X25) (4.510)	93-02	F	LH	15548771
	7-N23	7.347	BOLT, FRT S/ABS UPR MT (M10X1.5X25) (3.740)	93	F	RH	11515510

cardiagn.com

	7-N23	7.347	BOLT, FRT S/ABS UPR MT (USE ON RH SI) (HEX W/CON WA-10X1.5X25) (6.525)	94-02	F	RH	1638817
2.		8.915	NUT, HFH, 10X1.5 6H THD, 21.3 OD, 9.8 THK 13 HEX DR, GRD 9, ZF (FRT S/ABS UPR MT) (8.917)	93-02	F	4	10255857
3.		N.S.	SUPPORT, FRT UPR CONT ARM (PART OF 8)				
4.		8.917	NUT, HEX FLG PREVAILING TORQ (M12X1.75X14) (ZO 10) (FRT UPR CONT ARM) (PART OF 8)	93-02	F	4	11515744
5.		N.S.	RIVET, FRT UPR CONT ARM BALL STUD (PART OF 8)				
6.	7-D7	6.164	STUD KIT, FRT UPR CONT ARM BALL (PART OF 8)	93-02	F	2	22145478
7.		8.938	PIN, COTTER 3/32X1 1/2 PL (FRT UPR CONT ARM COT)	93-02	F	2	103376
8.	7-D7	6.168	ARM, FRT UPR CONT (INCLS 3-6, 9, 55)	93-97	F (EXC 1LE)	LH	22156459
	7-D7	6.168	ARM, FRT UPR CONT (INCLS 3-6, 9, 55)	93-97	F (EXC 1LE)	RH	22156460
	7-D7	6.168	ARM, FRT UPR CONT (INCLS 3-6, 9, 55)	93-97	F (1LE)	LH	22156461
	7-D7	6.168	ARM, FRT UPR CONT (INCLS 3-6, 9, 55)	93-97	F (1LE)	RH	22156462
	7-D7	6.168	ARM, FRT UPR CONT (INCLS 3-6, 9, 55)	98-02	F (FE2, FE4, F41)	LH	22156459
	7-D7	6.168	ARM, FRT UPR CONT (INCLS 3-6, 9, 55)	98-02	F (FE2, FE4, F41)	RH	22156460
	7-D7	6.168	ARM, FRT UPR CONT (INCLS 3-6, 9, 55)	98-00	F (FE7)	LH	22156461
	7-D7	6.168	ARM, FRT UPR CONT (INCLS 3-6, 9, 55)	98-00	F (FE7)	RH	22156462
9.		N.S.	BUSHING, FRT UPR CONT ARM (PART OF 8)				
10.	7-D9	6.178	NUT, FRT UPR CONT ARM (8.917)	93-02	F	2	11506055
11.	7-D7	6.020	KNUCKLE, STRG	93	F (EXC J1F)	RH	18021091
	7-D7	6.020	KNUCKLE, STRG	93	F (EXC J1F)	LH	18060608
	7-D7	6.020	KNUCKLE, STRG	94-97	F	RH	18021091
	7-D7	6.020	KNUCKLE, STRG	94-97	F	LH	18060608
	7-D7	6.020	KNUCKLE, STRG (AC-DELCO #18060620)	98-02	F (J65)	LH	18060620
	7-D7	6.020	KNUCKLE, STRG (AC-DELCO #18060621)	98-02	F (J65)	RH	18060621
	7-D7	6.020	KNUCKLE, STRG	93	F (J1F) (EXPORT)	LH	18020789
	7-D7	6.020	KNUCKLE, STRG	93	F (J1F) (EXPORT)	RH	18020790
	7-D7	6.020	KNUCKLE, STRG (AC-DELCO #18060620)	02	F (JAF) (EXPORT)	LH	18060620
	7-D7	6.020	KNUCKLE, STRG (AC-DELCO #18060621)	02	F (JAF) (EXPORT)	RH	18060621
12.	7-A7	4.665	BOLT, FRT BRK CLPR (AC-DELCO #18K123)	93-97	FP	AR	18034497
	7-A7	4.665	BOLT, FRT BRK CLPR (W/SLEEVE) (AC-DELCO #179-1021)	98-02	F (J65)	2	18020035
	7-A7	4.665	BOLT, FRT BRK CLPR	98-02	F (J65)	4	18023646

cardiagn.com

	7-A7	4.665	BOLT, FRT BRK CLPR (W/SLEEVE) (M11X1.5X57.5, 22.2 THD, 9.68 OD, GM 500M (9.8), DM-6092 COATED) (AC-DELCO #179-1306)	93-97	F	4	18029832
	7-A7	4.665	BOLT, FRT BRK CLPR	00-02	F (JAF) (EXPORT)	4	18023646
13.	7-A7	4.665	CALIPER, FRT BRK (SEE"BRAKE CALIPER, FRONT"ILLUSTRATION IN GRP. 4.000 FOR DETAILED VIEW.) (AC-DELCO #172-1507)	93	F	LH	18018731
	7-A7	4.665	CALIPER, FRT BRK (SEE"BRAKE CALIPER, FRONT"ILLUSTRATION IN GRP. 4.000 FOR DETAILED VIEW.) (AC-DELCO #172-1506)	93	F	RH	18060165
	7-A7	4.665	CALIPER, FRT BRK (SEE"BRAKE CALIPER, FRONT"ILLUSTRATION IN GRP. 4.000 FOR DETAILED VIEW.) (AC-DELCO #172-1542)	94	F	RH	18029937
	7-A7	4.665	CALIPER, FRT BRK (SEE"BRAKE CALIPER, FRONT"ILLUSTRATION IN GRP. 4.000 FOR DETAILED VIEW.) (AC-DELCO #172-1543)	94-97	F	LH	18029938
	7-A7	4.665	CALIPER, FRT BRK (SEE"BRAKE CALIPER, FRONT"ILLUSTRATION IN GRP. 4.000 FOR DETAILED VIEW.) (AC-DELCO #172-1544)	95-97	F	RH	18029928
	7-A7	4.665	CALIPER, FRT BRK (SEE"BRAKE CALIPER, FRONT"ILLUSTRATION IN GRP. 4.000 FOR DETAILED VIEW.) (AC-DELCO #172-1603)	98-02	F (J65)	LH	18042491
	7-A7	4.665	CALIPER, FRT BRK (SEE"BRAKE CALIPER, FRONT"ILLUSTRATION IN GRP. 4.000 FOR DETAILED VIEW.) (AC-DELCO #172-1604)	98-02	F (J65)	RH	18042492
	7-A7	4.665	CALIPER, FRT BRK (SEE"BRAKE CALIPER, FRONT"ILLUSTRATION IN GRP. 4.000 FOR DETAILED VIEW.) (AC-DELCO #172-1603)	02	F (J65) (EXC Z4C)	LH	18042491
	7-A7	4.665	CALIPER, FRT BRK (SEE"BRAKE CALIPER, FRONT"ILLUSTRATION IN GRP. 4.000 FOR DETAILED VIEW.) (AC-DELCO #172-1604)	02	F (J65) (EXC Z4C)	RH	18042492
	7-A7	4.665	CALIPER, FRT BRK (SEE"BRAKE CALIPER, FRONT"ILLUSTRATION IN GRP. 4.000 FOR DETAILED VIEW.) (AC-DELCO #172-1630)	02	F (J65, Z4C)	LH	18046299
	7-A7	4.665	CALIPER, FRT BRK (SEE"BRAKE CALIPER, FRONT"ILLUSTRATION IN GRP. 4.000 FOR DETAILED VIEW.) (AC-DELCO #172-1631)	02	F (J65, Z4C)	RH	18046300
14.	7-C20	5.809	ROTOR, FRT BRK (AC-DELCO #18018860)	93	F	2	18018860
	7-C20	5.809	ROTOR, FRT BRK (AC-DELCO #18018860)	94	F (EXC J1F)	2	18018860
	7-C20	5.809	ROTOR, FRT BRK (AC-DELCO #18018860)	95-97	F	2	18018860
	7-C20	5.809	ROTOR, FRT BRK (AC-DELCO #177-840)	98-99	F (J65)	2	18060230

cardiagn.com

	7-C20	5.809	ROTOR, FRT BRK (AC-DELCO #177-874)	00-02	F (J65)	2	18060640
	7-C20	5.809	ROTOR, FRT BRK (AC-DELCO #18020786)	94	F (J1F) (EXPORT)	2	18020786
	7-C20	5.809	ROTOR, FRT BRK (AC-DELCO #177-840)	98-99	F (JAF) (EXPORT)	2	18060230
	7-C20	5.809	ROTOR, FRT BRK (AC-DELCO #177-874)	00-02	F (JAF) (EXPORT)	2	18060640
15.	7-D11	6.307	HUB, FRT WHL (INCL 16) (LESS ROTOR) (W/SPEED SENSOR) (AC-DELCO #20-86)	93-02	F	2	7470587
16.	7-C22	5.812	BOLT, RR WHL (PART OF 15) (GREEN) (M12X1.5X34MM) (SERRATED SHLDR)	93-97	F	10	9591981
	7-C22	5.812	BOLT, RR WHL (PART OF 15)	98-02	F	10	9591978
17.		8.917	NUT (FRT LWR CONT ARM) (6.164)	93-02	F	2	3983037
18.	7-A15	4.720	BRACKET, WHL SPD SEN WIRE	93-96	F	2	18018555
		N.S.	BRACKET, WHL SPD SEN WIRE	97-02			
19.	7-C22	5.812	BOLT, FRT WHL HUB (M10X1.5X50 10.9 POR) (8.900)	93-02	F	8	11508355
20.		N.S.	BUSHING, FRT LWR CONT ARM (PART OF 21)				
21.	7-D7	6.168	ARM, FRT LWR CONT (INCLS 20, 23, 28) (WHEN REPL OLD ARM 22145148, NUT 14048922 IS REQ)	93-97	F (FE2) (EXC 1LE)	RH	52367657
	7-D7	6.168	ARM, FRT LWR CONT (INCLS 20, 23, 28)	93-97	F (FE2, 1LE)	LH	52367658
	7-D7	6.168	ARM, FRT LWR CONT (INCLS 20, 23, 28) (MUST ALSO ORDER 10254330 NUT)	93-97	F (FE2, 1LE)	RH	52367659
	7-D7	6.168	ARM, FRT LWR CONT (INCLS 20, 23, 28)	93-97	F (FE2) (EXC 1LE)	LH	52367656
	7-D7	6.168	ARM, FRT LWR CONT (INCLS 20, 23, 28)	98-02	F (FE2, FE4)	LH	52367656
	7-D7	6.168	ARM, FRT LWR CONT (INCLS 20, 23, 28)	98-02	F (FE2, FE4)	RH	52367657
	7-D7	6.168	ARM, FRT LWR CONT (INCLS 20, 23, 28)	98-00	F (FE7)	LH	52367658
	7-D7	6.168	ARM, FRT LWR CONT (INCLS 20, 23, 28) (MUST ALSO ORDER 10254330 NUT)	98-00	F (FE7)	RH	52367659
	7-D7	6.168	ARM, FRT LWR CONT (NUT 14048922 REQ WHEN REPLACING 22145145) (INCLS 20, 23, 28)	93-02	F (F41)	LH	52367654
	7-D7	6.168	ARM, FRT LWR CONT (NUT 14048922 REQ WHEN REPLACING 22145146) (INCLS 20, 23, 28)	93-02	F (F41)	RH	52367655
22.		8.938	PIN, COTTER, .125X1.250 (FRT LWR CONT ARM COT)	93-02		2	9440095
23.	7-D9	6.174	STUD KIT, FRT LWR CONT ARM BALL (PART OF 21)	93-02	F	2	22156500
24.	7-N21	7.243	INSULATOR, FRT STAB SHF LINK (NATURAL) (70 DURO) (*KIT1)	93-02	F (F41)	8	10198370

cardiagn.com

	7-N21	7.243	INSULATOR, FRT STAB SHF LINK (*KIT1)	93-99	F (FE2)	4	10221801
	7-N21	7.243	INSULATOR, FRT STAB SHF LINK (*KIT1)	98-99	F (FE4, FE7)	4	10221801
	7-N21	7.243	INSULATOR, FRT STAB SHF LINK (*KIT1)	00-02	F (FE2, FE4)	8	10221801
25.		8.929	WASHER, FL M9.1X31.5X3.1 1010 ZC (FRT STAB SHF) (*KIT1) (AC-DELCO #10029761)	93-02		8	10029761
26.	7-N20	7.242	BOLT, FRT STAB SHF (M8 X 1.25X 180MM) (*KIT1) (7.240)	93-02	F	2	10018984
27.		8.900	BOLT, HFH M10X1.5X75 10.9PZOR (FRT S/ABS)	93-02		4	11508540
28.		N.S.	BUSHING, FRT LWR CONT ARM (PART OF 21)				
29.	7-D9	6.172	NUT, FRT LWR CONT ARM FRT (M14X2X11.92) (HEX W/CONICAL WA PREV TORQ) (5.383)	93-02	F	2	3537773
	7-D9	6.172	NUT, FRT LWR CONT ARM RR (M14X2X11.92) (HEX W/CONICAL WA PREV TORQ) (5.383)	93-02	F	2	3537773
30.	7-N20	7.242	NUT, FRT STAB SHF (8X1.25, 7.32, 31.5) (*KIT1) (7.240)	93-02	F	2	15571396
31.		N.S.	SPACER, FRT STAB SHF RET (*KIT1)				
32.	7-D9	6.172	BOLT, FRT LWR CONT ARM (M14X2X110.0, 35 THD)	93-02	F	2	10229835
33.	7-N19	7.010	CROSSMEMBER, FRT	93-97	F87 (LT1)	1	10245738
	7-N19	7.010	CROSSMEMBER, FRT	95-02	F87 (L36)	1	10245741
	7-N19	7.010	CROSSMEMBER, FRT	93-95	F87 (L32)	1	10245745
	7-N19	7.010	CROSSMEMBER, FRT	98-02	F87 (LS1)	1	10293578
34.	7-N20	7.241	SHAFT, FRT STAB	93-95	F (EXC 1LE)	1	26025316
	7-N20	7.241	SHAFT, FRT STAB	93-97	F (1LE)	1	26032907
	7-N20	7.241	SHAFT, FRT STAB	96-97	F (EXC WU8, 1LE)	1	26025316
	7-N20	7.241	SHAFT, FRT STAB	96-97	F (WU8)	1	26032907
	7-N20	7.241	SHAFT, FRT STAB	98-02	F (F41)	1	26025315
	7-N20	7.241	SHAFT, FRT STAB	98-99	F (FE2)	1	26025316
	7-N20	7.241	SHAFT, FRT STAB	98-02	F (FE4)	1	26032907
	7-N20	7.241	SHAFT, FRT STAB	98-99	F87 (FE7)	1	26032907
	7-N20	7.241	SHAFT, FRT STAB	00-02	F87 (FE2)	1	26025316
35.	7-N20	7.242	BOLT, FRT STAB SHF INSL CLA (HEX W/CON WA--10X1.5X25) (6.525)	93-02	F	3	1838817
	7-N20	7.242	STUD, FRT STAB SHF INSL CLA	94-96	F (K34)	1	10254770
	7-N20	7.242	STUD, FRT STAB SHF INSL CLA	97-02	F	1	10254770
36.	7-N20	7.242	CLAMP, FRT STAB SHF INSL	93-02	F	2	10259206
37.	7-N21	7.243	INSULATOR, FRT STAB SHF	93-95	F (FE2, 1LE)	2	10288551
	7-N21	7.243	INSULATOR, FRT STAB SHF	93-97	F (F41)	2	26039027
	7-N21	7.243	INSULATOR, FRT STAB SHF	93-95	F (FE2) (EXC 1LE)	2	26039030
	7-N21	7.243	INSULATOR, FRT STAB SHF	96-97	F (FE2, WU8, 1LE)	2	10288551
	7-N21	7.243	INSULATOR, FRT STAB SHF	96-97	F (FE2) (EXC WU8, 1LE)	2	26039030
	7-N21	7.243	INSULATOR, FRT STAB SHF	98-99	F (FE4, FE7)	2	10288551
	7-N21	7.243	INSULATOR, FRT STAB SHF	98-02	F (F41)	2	10298579
	7-N21	7.243	INSULATOR, FRT STAB SHF	98-99	F (FE2)	2	26039030
	7-N21	7.243	INSULATOR, FRT STAB SHF	00-02	F (FE4)	2	10288551
	7-N21	7.243	INSULATOR, FRT STAB SHF	00-02	F87 (FE2)	2	26039030

cardiagn.com

38.	7-N19	7.039	BOLT, FRT C/MBR (M12X1.75X92, 49) (SPL REDUCED SHANK, CONE PT) ...	93-02	F	4	10234622
39.	7-N20	7.242	BRACKET, FRT STAB SHF	93-02	F	2	10164141
40.	7-N20	7.242	BOLT, FRT STAB SHF BRKT (HEX W/CON WA-10X1.5X25) (6.525) .	93-02	F	6	1638817
41.	7-N19	7.039	NUT, FRT C/MBR	93-02	F	4	10156327
42.		N.S.	PLUG, DRIVETRAIN & FRT SUSP FRM NUT (FOR FACTORY SHIPPING PURPOSES ONLY) ...		.....		
43.	7-N19	7.039	BOLT, FRT C/MBR	93-02	F	2	10259353
44.	7-D9	6.172	BOLT, FRT LWR CONT ARM (BOLT, HFH, M14X2X86.5, 40.5 THD, PO)	93-02	F	2	10164163
45.		8.915	NUT, HFH, 10X1.5 6H THD, 21.3 OD, 9.8 THK 13 HEX DR, GRD 9, ZF (FRT S/ABS LWR BRKT) (8.917)	93-02	.....	4	10255857
46.	7-N22	7.345	ABSORBER, FRT SHK	93-97	F (FE2) (EXC 1LE)	2	22140189
	7-N22	7.345	ABSORBER, FRT SHK	93-97	F (F41)	2	22151319
	7-N22	7.345	ABSORBER, FRT SHK (AC-DELCO #22182498)	93-97	F (FE2)	2	22182498
	7-N22	7.345	ABSORBER, FRT SHK (AC-DELCO #530-114)	93-00	FP	2	88945282
	7-N22	7.345	ABSORBER, FRT SHK	98	F (FE4)	2	22166717
	7-N22	7.345	ABSORBER, FRT SHK (AC-DELCO #540-27)	98	F (FE2)	1	22199128
	7-N22	7.345	ABSORBER, FRT SHK	98	F67-87 (F41)	2	22182495
	7-N22	7.345	ABSORBER, FRT SHK	99	F (FE2)	2	22182495
	7-N22	7.345	ABSORBER, FRT SHK	99-02	F (F41)	2	22182495
	7-N22	7.345	ABSORBER, FRT SHK (AC-DELCO #22182498)	99-02	F (FE4)	2	22182498
	7-N22	7.345	ABSORBER, FRT SHK (AC-DELCO #22182498)	99-02	F87 (FE2)	2	22182498
47.	7-N25	7.420	SEAT, FRT SPR	93-02	F	2	22099275
48.	7-N25	7.420	INSULATOR, FRT SPR LWR	93-02	F	2	22113814
49.	7-N23	7.371	SHIELD, FRT S/ABS DUST (CODE ZR, PR, PS, PT, PU, PW, PZ, ZP, ZK, ZL, ZM, ZN, DZ, NM) .	93-02	F	2	22114311
	7-N23	7.395	BUMPER, FRT S/ABS UPR (CODE DN, DR, DS, DT, DV, GJ, GK, EG, EH, EJ, EK, EL, EV, EW, EX, EY, GA)	93	F	2	22128877
	7-N23	7.395	BUMPER, FRT S/ABS UPR (CODE DZ, NM, ZR, ZP, ZK, ZL, ZM, ZN, PR, PS, PT, PU, PW, PZ) .	98-99	F (FE2, FE4, FE7)	2	22128877
	7-N23	7.395	BUMPER, FRT S/ABS UPR (CODE DZ, NM, ZR, ZP, ZK, ZL, ZM, ZN, PR, PS, PT, PU, PW, PZ) .	99	F (F41)	2	22128877
	7-N23	7.395	BUMPER, FRT S/ABS UPR (CODE HW, HX, GL, GM, GN, GR, HA, HB, HD, HE, HG, AS, AT, AV, AW, AX, AY, BA, BB, BD, BE, BG, BN, BJ, BK, BL, BM, BH)	94	F	2	22128877

cardiagn.com

	7-N23	7.395	**BUMPER**, FRT S/ABS UPR (CODE HW, HX, GL, GM, GN, GR, HA, HB, HD, HE, HG, AS, AT, AV, AW, AX, AY, BA, BB, BD, BE, BG, AJ, AK, AL, AM, AN, AR, BJ, BK, BL, BM, BN, BH)	95	F	2	22128877
	7-N23	7.395	**BUMPER**, FRT S/ABS UPR (CODE PR, PS, PT, PU, PW, PZ, ZR, ZP, ZK, ZL, ZM, ZN, DZ, NM)	00-02	F	2	22128877
	7-N23	7.395	**BUMPER**, FRT S/ABS UPR (CODE R8, HW, AA, AJ, BA, BB, BD, BE, BG, BH, BJ, BK, BL, BM, HX, GL, GM, GN, GR, AB, AD, AK, AL, AM, AN, AR, ZJ, HA, HB, HD, HE, HG)	97	F	2	22128877
	7-N23	7.395	**BUMPER**, FRT S/ABS UPR (CODE R8, HW, AJ, BA, BB, BD, BE, BG, BH, BJ, BK, BL, BM, HA, HB, HD, HE, HG, AA, AK, AL, AM, AN, AR, HX, GL, GM, GN, GR, AB, AD)	96	F	2	22128877
50.	7-N24	7.412	**SPRING**, FRT	98	F87 (F41)	2	22133437
	7-N24	7.412	**SPRING**, FRT (CODE AA, AB, AC, AD, AF, AH, AJ, AK, AM, AN)	01-02	F (F41)	2	22133437
	7-N24	7.412	**SPRING**, FRT (CODE AA, AB, AC, AD, AF, AH, AJ, AK, AM, AN)	01	F (F41)	2	22197223
	7-N24	7.412	**SPRING**, FRT (CODE AA, AB, AD, AJ, AK, AL, GL, HW, HX)	97	F	2	22077189
	7-N24	7.412	**SPRING**, FRT (CODE AM, AN, AR, GM, GN, GR)	97	F	2	22133437
	7-N24	7.412	**SPRING**, FRT (CODE AM, AN, AR, GM, GN, GR)	97	F	2	22197223
	7-N24	7.412	**SPRING**, FRT (CODE BA, BB, BD, BH, BK, HA, HB, HD, BJ)	97	F	2	22077195
	7-N24	7.412	**SPRING**, FRT (CODE BA, BB, BD, BH, BK, HA, HB, HD, BJ)	97	F	2	22197228
	7-N24	7.412	**SPRING**, FRT (CODE BB, BJ, BD, BK, BA, BH, HD, HA, HB)	94	F	2	22077195
	7-N24	7.412	**SPRING**, FRT (CODE BB, BJ, BD, BK, BA, BH, HD, HA, HB)	94	F	2	22197228
	7-N24	7.412	**SPRING**, FRT (CODE BB, BJ, BD, BK, BA, BH, HB, HD)	95-96	F	2	22077195
	7-N24	7.412	**SPRING**, FRT (CODE BB, BJ, BD, BK, BA, BH, HB, HD)	95-96	F	2	22197228
	7-N24	7.412	**SPRING**, FRT (CODE BE, BG, BL, BM, HE, HG)	97	F	2	22077197
	7-N24	7.412	**SPRING**, FRT (CODE BE, BG, BL, BM, HE, HG)	97	F	2	22197230
	7-N24	7.412	**SPRING**, FRT (CODE BE, BL, BG, BM, EK, EL, EY, GA, GG, GH, HE, HG, HL, HM, HT, HV, BE, BL, BG, BM)	93-96	F	2	22077197
	7-N24	7.412	**SPRING**, FRT (CODE BE, BL, BG, BM, EK, EL, EY, GA, GG, GH, HE, HG, HL, HM, HT, HV, BE, BL, BG, BM)	93-96	F	2	22197230
	7-N24	7.412	**SPRING**, FRT (CODE BM, BN, BP, CD, DF, PW)	02	F (F41)	2	22133437

cardiagn.com

	7-N24	7.412	SPRING, FRT (CODE BM, BN, BP, CD, DF, PW)	02	F (F41)	2	22197223
	7-N24	7.412	SPRING, FRT (CODE BN)	94-96	F	2	22132887
	7-N24	7.412	SPRING, FRT (CODE BR, BS, CH)	02	F (FE2, FE4)	2	22077195
	7-N24	7.412	SPRING, FRT (CODE BR, BS, CH)	02	F (FE2, FE4)	2	22197228
	7-N24	7.412	SPRING, FRT (CODE BT, CJ)	02	F (FE2, FE4)	2	22077197
	7-N24	7.412	SPRING, FRT (CODE BT, CJ)	02	F (FE2, FE4)	2	22197230
	7-N24	7.412	SPRING, FRT (CODE DN, DR, DX, DY, GJ, GK, GL, GV, GT, HW, HX, HY, AT, AV, AS)	93-96	F	2	22077189
	7-N24	7.412	SPRING, FRT (CODE DS, DT, DV, EA, EB, ED, GM, GN, GR, GW, GX, GY, AW, AX, AY)	93-96	F	2	22133437
	7-N24	7.412	SPRING, FRT (CODE DS, DT, DV, EA, EB, ED, GM, GN. GR, GW, GX, GY, AW, AX, AY)	93-96	F	2	22197223
	7-N24	7.412	SPRING, FRT (CODE DZ, NM, ZR)	99	F87 (FE4)	2	22132887
	7-N24	7.412	SPRING, FRT (CODE NM)	98	F	2	22132887
	7-N24	7.412	SPRING, FRT (CODE NM)	98	F (FE4)	2	22132887
	7-N24	7.412	SPRING, FRT (CODE NM)	98	F87	2	22132887
	7-N24	7.412	SPRING, FRT (CODE PR, PS, PT, PU, PW, PZ)	99-02	F (F41)	2	22133437
	7-N24	7.412	SPRING, FRT (CODE PR, PS, PT, PU, PW, PZ)	99-02	F (F41)	2	22197223
	7-N24	7.412	SPRING, FRT (CODE PR, PU, PZ)	98	F (F41)	2	22133437
	7-N24	7.412	SPRING, FRT (CODE PS)	98	F (F41)	2	22133435
	7-N24	7.412	SPRING, FRT (CODE PT, PR, PS, PU, PW, PZ)	98	F87 (F41)	2	22197223
	7-N24	7.412	SPRING, FRT (CODE PT, PR, PU, PW, PZ)	98	F87 (F41)	2	22133437
	7-N24	7.412	SPRING, FRT (CODE PU)	98	F (F41)	2	22197223
	7-N24	7.412	SPRING, FRT (CODE PW)	98	F87 (F41)	RH	22133437
	7-N24	7.412	SPRING, FRT (CODE PW)	98	F87 (F41)	RH	22133438
	7-N24	7.412	SPRING, FRT (CODE PW)	98	F87 (F41)	RH	22197223
	7-N24	7.412	SPRING, FRT (CODE PW, PZ)	99-00	F (F41)	2	22133438
	7-N24	7.412	SPRING, FRT (CODE PZ)	98	F87 (F41)	RH	22133437
	7-N24	7.412	SPRING, FRT (CODE PZ)	98	F87 (F41, 6PZ, 7PZ)	1	22133437
	7-N24	7.412	SPRING, FRT (CODE PZ)	98	F87 (F41)	RH	22133438
	7-N24	7.412	SPRING, FRT (CODE PZ)	98	F87 (F41)	RH	22197223
	7-N24	7.412	SPRING, FRT (CODE R8)	97	F	2	22132887
	7-N24	7.412	SPRING, FRT (CODE ZK, ZL, ZP)	98-02	F (FE2, FE4)	2	22077195
	7-N24	7.412	SPRING, FRT (CODE ZK, ZL, ZP)	98-02	F (FE2, FE4)	2	22197228
	7-N24	7.412	SPRING, FRT (CODE ZM, ZN)	98-02	F (FE2, FE4)	2	22077197
	7-N24	7.412	SPRING, FRT (CODE ZM, ZN)	98-02	F (FE2, FE4)	2	22197230
51.	7-N23	7.395	RETAINER, FRT S/ABS DUST SHLD (CODE ZP, ZK, ZL, ZM, ZN, PR, PS, PT, PU, PW, PZ)	93-98	F	2	22129944
	7-N23	7.395	RETAINER, FRT S/ABS DUST SHLD (CODE ZR, PR, PS, PT, PU, PW, PZ, ZP, ZK, ZL, ZM, ZN, DZ, NM)	99-02	F	2	22129944
52.	7-N23	7.395	INSULATOR, FRT S/ABS	93-02	F	2	17999212
53.	7-N23	7.395	MOUNT, FRT S/ABS UPR	93-02	F	LH	22146933

cardiagn.com

	7-N23	7.395	MOUNT, FRT S/ABS UPR	93-02	F	RH	22146934
54.		8.917	NUT, WA INSERT TORQ HEX FLANGE, TYPE A, M10X1.5, 510M, ZC (FRT S/ABS)	93-02	.....	2	11515604
55.		8.900	BOLT, HFH, M12X1.75X65, 30 THD, 10.9, POR (FRT UPR CONT ARM) (PART OF 8)	93-02	.....	4	11514280
56.	7-N23	7.347	WASHER, FRT S/ABS (CODES:ZP, ZR, PR, PS, PT, PU, PW, PZ, ZK, ZL, ZM, ZN, DZ, NM)	93-02	F	2	25325

SERVICE KITS

1.	7-N19	7.240	LINK, FRT STAB SHF (INCLS 24, 25, 26, 30, 31)	93-02	F	2	10164176
	7-N19	7.240	LINK, FRT STAB SHF (INCLS 24, 25, 26, 30, 31)	93-97	F (FE2)	2	10221779
	7-N19	7.240	LINK, FRT STAB SHF (INCLS 24, 25, 26, 30, 31)	98-99	F (FE2, FE4, FE7)	2	10221779
	7-N19	7.240	LINK, FRT STAB SHF (INCLS 24, 25, 26, 30, 31)	00-02	F (FE2, FE4)	2	10221779

RPO DEFINITIONS

FE2 – SUSPENSION SYSTEM,RIDE AND HANDLING
FE4 – SUSPENSION SYSTEM SPECIAL RIDE & HANDLING
FE7 – SUSPENSION SYSTEM,FRONT AND REAR,HEAVY DUTY
F41 – SUSPENSION,FIRM RIDE HANDLING,FRONT AND REAR
JAF – BRAKE PROVISIONS EUROPE
J1F – BRAKE,SPECIAL(EXPORT)
J65 – BRAKE SYSTEM,POWER,FRONT AND REAR DISC
K34 – CRUISE CONTROL,AUTOMATIC,ELECTRONIC
LS1 – ENGINE GAS, 8 CYL, 5.7L, SFI, ALUMINUM ENGINE
LT1 – ENGINE–GAS, 8 CYL, 5.7L(5.7P),MFI,HO
L32 – ENGINE,3.4L,V6,(3.4S),SFI,OHV
L36 – ENGINE GAS, 6 CYL, 3.8K, MFI, V6, HO (ERV6 SERIES)
WU8 – SALES PACKAGE Z28 SS UPFITTER
Z4C – APPEARANCE PACKAGE 35TH ANNIVERSARY
1LE – PERFORMANCE PACKAGE COMPONENTS
6PZ – COMPONENT FRT LH COMPUTER SEL SUSP (6PZ)
7PZ – COMPONENT FRT RH COMPUTER SEL SUSP (7PZ)

cardiagn.com

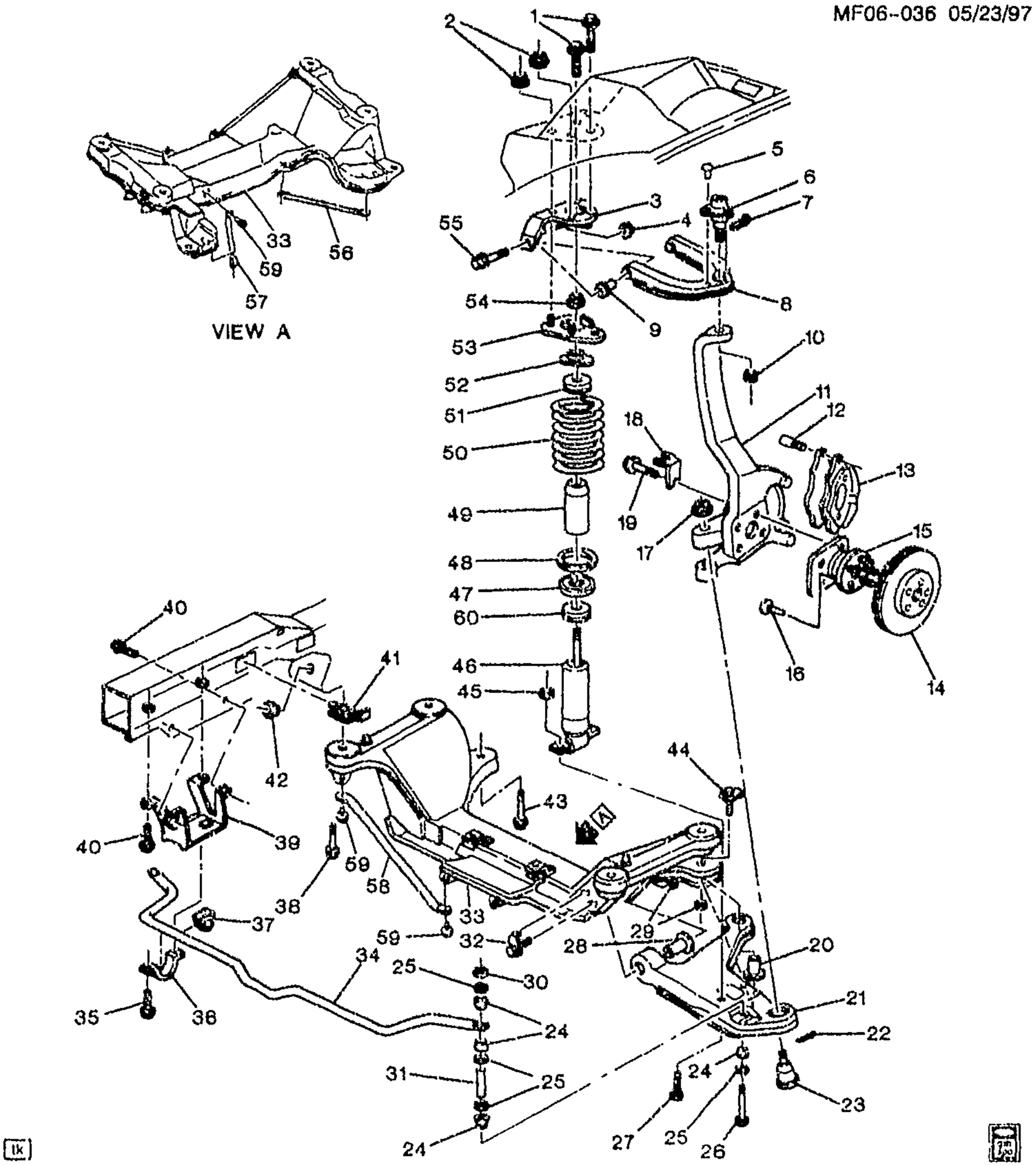

MF06-036

1994-2002 F67 SUSPENSION/FRONT

1.	7-N23	7.347	BOLT, FRT S/ABS UPR MT (M10X1.5X25) (4.510)	94-02	F	LH	15548771
	7-N23	7.347	BOLT, FRT S/ABS UPR MT (USE ON RH SI) (HEX W/CON WA-10X1.5X25) (6.525)	94-02	F	RH	1638817

cardiagn.com

2.		8.915	NUT, HFH, 10X1.5 6H THD, 21.3 OD, 9.8 THK 13 HEX DR, GRD 9, ZF (FRT S/ABS UPR MT) (8.917)	94-02		4	10255857
3.		N.S.	SUPPORT, FRT UPR CONT ARM (PART OF 8)				
4.		8.917	NUT, HEX FLG PREVAILING TORQ (M12X1.75X14) (ZO 10) (FRT UPR CONT ARM) (PART OF 8)	94-02		4	11515744
5.		N.S.	RIVET, FRT UPR CONT ARM BALL STUD (PART OF 8)				
6.	7-D7	6.164	STUD KIT, FRT UPR CONT ARM BALL (PART OF 8)	94-02	F	2	22145475
7.		8.938	PIN, COTTER 3/32X1 1/2 PL (FRT UPR CONT ARM COT)	94-02		2	103376
8.	7-D7	6.168	ARM, FRT UPR CONT (INCLS 3-6, 9, 55)	94-97	F (EXC 1LE)	LH	22156459
	7-D7	6.168	ARM, FRT UPR CONT (INCLS 3-6, 9, 55)	94-97	F (EXC 1LE)	RH	22156460
	7-D7	6.168	ARM, FRT UPR CONT (INCLS 3-6, 9, 55)	94-97	F (1LE)	LH	22156461
	7-D7	6.168	ARM, FRT UPR CONT (INCLS 3-6, 9, 55)	94-97	F (1LE)	RH	22156462
	7-D7	6.168	ARM, FRT UPR CONT (INCLS 3-6, 9, 55)	98-02	F (FE2, FE4, F41)	LH	22156459
	7-D7	6.168	ARM, FRT UPR CONT (INCLS 3-6, 9, 55)	98-02	F (FE2, FE4, F41)	RH	22156460
	7-D7	6.168	ARM, FRT UPR CONT (INCLS 3-6, 9, 55)	98-00	F (FE7)	LH	22156461
	7-D7	6.168	ARM, FRT UPR CONT (INCLS 3-6, 9, 55)	98-00	F (FE7)	RH	22156462
9.		N.S.	BUSHING, FRT UPR CONT ARM (PART OF 8)				
10.	7-D9	6.178	NUT, FRT UPR CONT ARM (8.917)	94-02	F	2	11506055
11.	7-D7	6.020	KNUCKLE, STRG	94-97	F	RH	18021091
	7-D7	6.020	KNUCKLE, STRG	94-97	F	LH	18060608
	7-D7	6.020	KNUCKLE, STRG (AC-DELCO #18060620)	98-02	F (J65)	LH	18060620
	7-D7	6.020	KNUCKLE, STRG (AC-DELCO #18060621)	98-02	F (J65)	RH	18060621
	7-D7	6.020	KNUCKLE, STRG (AC-DELCO #18060620)	02	F (JAF) (EXPORT)	LH	18060620
	7-D7	6.020	KNUCKLE, STRG (AC-DELCO #18060621)	02	F (JAF) (EXPORT)	RH	18060621
12.	7-A7	4.665	BOLT, FRT BRK CLPR (AC-DELCO #18K123)	94-97	FP	AR	18034497
	7-A7	4.665	BOLT, FRT BRK CLPR (W/SLEEVE) (AC-DELCO #179-1021)	98-02	F (J65)	2	18020035
	7-A7	4.665	BOLT, FRT BRK CLPR	98-02	F (J65)	4	18023646
	7-A7	4.665	BOLT, FRT BRK CLPR (W/SLEEVE) (M11X1.5X57.5, 22.2 THD, 9.68 OD, GM 500M (9.8), DM-6092 COATED) (AC-DELCO #179-1306)	94-97	F	4	18029832
	7-A7	4.665	BOLT, FRT BRK CLPR	00-02	F (JAF) (EXPORT)	4	18023646

cardiagn.com

13.	7-A7	4.665	**CALIPER**, FRT BRK (SEE "BRAKE CALIPER, FRONT" ILLUSTRATION IN GRP. 4.000 FOR DETAILED VIEW.) (AC-DELCO #172-1542)	94	F	RH	18029937
	7-A7	4.665	**CALIPER**, FRT BRK (SEE "BRAKE CALIPER, FRONT" ILLUSTRATION IN GRP. 4.000 FOR DETAILED VIEW.) (AC-DELCO #172-1543)	94-97	F	LH	18029938
	7-A7	4.665	**CALIPER**, FRT BRK (SEE "BRAKE CALIPER, FRONT" ILLUSTRATION IN GRP. 4.000 FOR DETAILED VIEW.) (AC-DELCO #172-1544)	95-97	F	RH	18029928
	7-A7	4.665	**CALIPER**, FRT BRK (SEE "BRAKE CALIPER, FRONT" ILLUSTRATION IN GRP. 4.000 FOR DETAILED VIEW.) (AC-DELCO #172-1603)	98-02	F (J65)	LH	18042491
	7-A7	4.665	**CALIPER**, FRT BRK (SEE "BRAKE CALIPER, FRONT" ILLUSTRATION IN GRP. 4.000 FOR DETAILED VIEW.) (AC-DELCO #172-1604)	98-02	F (J65)	RH	18042492
	7-A7	4.665	**CALIPER**, FRT BRK (SEE "BRAKE CALIPER, FRONT" ILLUSTRATION IN GRP. 4.000 FOR DETAILED VIEW.) (AC-DELCO #172-1603)	02	F (J65) (EXC Z4C)	LH	18042491
	7-A7	4.665	**CALIPER**, FRT BRK (SEE "BRAKE CALIPER, FRONT" ILLUSTRATION IN GRP. 4.000 FOR DETAILED VIEW.) (AC-DELCO #172-1604)	02	F (J65) (EXC Z4C)	RH	18042492
	7-A7	4.665	**CALIPER**, FRT BRK (SEE "BRAKE CALIPER, FRONT" ILLUSTRATION IN GRP. 4.000 FOR DETAILED VIEW.) (AC-DELCO #172-1630)	02	F (J65, Z4C)	LH	18046299
	7-A7	4.665	**CALIPER**, FRT BRK (SEE "BRAKE CALIPER, FRONT" ILLUSTRATION IN GRP. 4.000 FOR DETAILED VIEW.) (AC-DELCO #172-1631)	02	F (J65, Z4C)	RH	18046300
14.	7-C20	5.809	**ROTOR**, FRT BRK (AC-DELCO #18018860)	94	F (EXC J1F)	2	18018860
	7-C20	5.809	**ROTOR**, FRT BRK (AC-DELCO #18018860)	95-97	F	2	18018860
	7-C20	5.809	**ROTOR**, FRT BRK (AC-DELCO #177-840)	98-99	F (J65)	2	18060230
	7-C20	5.809	**ROTOR**, FRT BRK (AC-DELCO #177-874)	00-02	F (J65)	2	18060640
	7-C20	5.809	**ROTOR**, FRT BRK (AC-DELCO #18020786)	94	F (J1F) (EXPORT)	2	18020786
	7-C20	5.809	**ROTOR**, FRT BRK (AC-DELCO #177-840)	98-99	F (JAF) (EXPORT)	2	18060230

cardiagn.com

	7-C20	5.809	ROTOR, FRT BRK (AC-DELCO #177-874)	00-02	F (JAF) (EXPORT)	2	18060640
15.	7-D11	6.307	HUB, FRT WHL (INCLS 16) (LESS ROTOR) (W/SPEED SENSOR) (AC-DELCO #20-86)	94-02	F	2	7470587
16.	7-D11	6.307	HUB, FRT WHL (PART OF 15) (LESS ROTOR) (W/SPEED SENSOR) (AC-DELCO #20-86)	94-02	F	2	7470587
17.	7-D9	6.172	NUT, FRT LWR CONT ARM (M14 X 2.0-6H X 14) (7.530)	94	F	2	10254330
	7-D9	6.172	NUT, FRT LWR CONT ARM	95-02	F	2	10274257
18.	7-A15	4.720	BRACKET, WHL SPD SEN WIRE	94-96	F	2	18018555
		N.S.	BRACKET, WHL SPD SEN WIRE	97-02			
19.	7-C22	5.812	BOLT, FRT WHL HUB (M10X1.5X50 10.9 POR) (8.900)	94-02	F	8	11508355
20.	7-D8	6.170	BUSHING, FRT LWR CONT ARM (PART OF 21) (RR)	94-95	F (F41)	2	17999112
	7-D8	6.170	BUSHING, FRT LWR CONT ARM (PART OF 21) (RR)	94-95	F (FE2) (EXC 1LE)	2	17999113
	7-D8	6.170	BUSHING, FRT LWR CONT ARM (PART OF 21) (RR)	94-97	F (FE2, 1LE)	2	22156434
	7-D8	6.170	BUSHING, FRT LWR CONT ARM (PART OF 21) (RR)	98-02	F (FE7)	2	22156434
21.	7-D7	6.168	ARM, FRT LWR CONT (INCLS 20, 23, 28) (WHEN REPL OLD ARM 22145147, NUT 14048922 IS REQ)	94-97	F (FE2) (EXC 1LE)	LH	52367656
	7-D7	6.168	ARM, FRT LWR CONT (INCLS 20, 23, 28)	94-97	F (FE2, 1LE)	LH	52367658
	7-D7	6.168	ARM, FRT LWR CONT (INCLS 20, 23, 28) (MUST ALSO ORDER 10254330 NUT)	94-97	F (FE2, 1LE)	RH	52367659
	7-D7	6.168	ARM, FRT LWR CONT (INCLS 20, 23, 28)	94-97	F (FE2) (EXC 1LE)	RH	52367657
	7-D7	6.168	ARM, FRT LWR CONT (INCLS 20, 23, 28)	98-02	F (FE2, FE4)	LH	52367656
	7-D7	6.168	ARM, FRT LWR CONT (INCLS 20, 23, 28)	98-02	F (FE2, FE4)	RH	52367657
	7-D7	6.168	ARM, FRT LWR CONT (INCLS 20, 23, 28)	98-00	F (FE7)	LH	52367658
	7-D7	6.168	ARM, FRT LWR CONT (INCLS 20, 23, 28) (MUST ALSO ORDER 10254330 NUT)	98-00	F (FE7)	RH	52367659
	7-D7	6.168	ARM, FRT LWR CONT (NUT 14048922 REQ WHEN REPLACING 22145145) (INCLS 20, 23, 28)	94-02	F (F41)	LH	52367654
	7-D7	6.168	ARM, FRT LWR CONT (NUT 14048922 REQ WHEN REPLACING 22145146) (INCLS 20, 23, 28)	94-02	F (F41)	RH	52367655
22.		8.938	PIN, COTTER, .125X1.250 (FRT LWR CONT ARM COT)	94-02		2	9440095
23.	7-D9	6.174	STUD KIT, FRT LWR CONT ARM BALL (PART OF 21)	94-02	F	2	22156500
24.	7-N21	7.243	INSULATOR, FRT STAB SHF LINK (NATURAL) (70 DURO) (*KIT1)	94-02	F (F41)	8	10198370

cardiagn.com

	7-N21	7.243	INSULATOR, FRT STAB SHF LINK (*KIT1)	94-99	F (FE2)	4	10221801
	7-N21	7.243	INSULATOR, FRT STAB SHF LINK (*KIT1)	98-99	F (FE4, FE7)	4	10221801
	7-N21	7.243	INSULATOR, FRT STAB SHF LINK (*KIT1)	00-02	F (FE2, FE4)	8	10221801
25.		8.929	WASHER, FL M9.1X31.5X3.1 1010 ZC (FRT STAB SHF) (*KIT1) (AC-DELCO #10029761)	94-02		8	10029761
26.	7-N20	7.242	BOLT, FRT STAB SHF (M8 X 1.25X 180MM) (*KIT1) (7.240)	94-02	F	2	10018984
27.		8.900	BOLT, HFH M10X1.5X75 10.9PZOR (FRT S/ABS)	94-02		4	11508540
28.	7-D8	6.170	BUSHING, FRT LWR CONT ARM (PART OF 21)	94-95	F (F41)	2	17999114
	7-D8	6.170	BUSHING, FRT LWR CONT ARM (PART OF 21)	94-95	F (FE2) (EXC 1LE)	2	17999115
	7-D8	6.170	BUSHING, FRT LWR CONT ARM (PART OF 21)	94-97	F (FE2, 1LE)	2	22145392
	7-D8	6.170	BUSHING, FRT LWR CONT ARM (PART OF 21)	98-02	F (FE7)	2	22145392
29.	7-D9	6.172	NUT, FRT LWR CONT ARM FRT (M14X2X11.92) (HEX W/CONICAL WA PREV TORQ) (5.383)	94-02	F	2	3537773
	7-D9	6.172	NUT, FRT LWR CONT ARM RR (M14X2X11.92) (HEX W/CONICAL WA PREV TORQ) (5.383)	94-02	F	2	3537773
30.	7-N20	7.242	NUT, FRT STAB SHF (8X1.25, 7.32, 31.5) (*KIT1) (7.240)	94-02	F	2	15571396
31.		N.S.	SPACER, FRT STAB SHF RET (*KIT1)				
32.	7-D9	6.172	BOLT, FRT LWR CONT ARM (M14X2X110.0, 35 THD)	94-02	F	2	10229835
33.	7-N19	7.010	CROSSMEMBER, FRT	94-97	F67 (LT1)	1	10259279
	7-N19	7.010	CROSSMEMBER, FRT	94-95	F67 (L32)	1	10259280
	7-N19	7.010	CROSSMEMBER, FRT	95-02	F67 (L36)	1	10438425
	7-N19	7.010	CROSSMEMBER, FRT	98-02	F67 (LS1)	1	10293585
34.	7-N20	7.241	SHAFT, FRT STAB	94-95	F (EXC 1LE)	1	26025316
	7-N20	7.241	SHAFT, FRT STAB	94-97	F (1LE)	1	26032907
	7-N20	7.241	SHAFT, FRT STAB	96-97	F (EXC WU8, 1LE)	1	26025316
	7-N20	7.241	SHAFT, FRT STAB	96-97	F (WU8)	1	26032907
	7-N20	7.241	SHAFT, FRT STAB	98-02	F (F41)	1	26025315
	7-N20	7.241	SHAFT, FRT STAB	98-99	F (FE2)	1	26025316
	7-N20	7.241	SHAFT, FRT STAB	98-02	F (FE4)	1	26032907
	7-N20	7.241	SHAFT, FRT STAB	00-02	F67 (FE2)	1	26032907
35.	7-N20	7.242	BOLT, FRT STAB SHF INSL CLA (HEX W/CON WA-10X1.5X25) (6.525)	94-02	F	4	1638817
	7-N20	7.242	STUD, FRT STAB SHF INSL CLA	94-96	F (K34)	1	10254770
	7-N20	7.242	STUD, FRT STAB SHF INSL CLA	97-02	F	1	10254770
36.	7-N20	7.242	CLAMP, FRT STAB SHF INSL	94-02	F	2	10259206
37.	7-N21	7.243	INSULATOR, FRT STAB SHF	94-95	F (FE2, 1LE)	2	10288551
	7-N21	7.243	INSULATOR, FRT STAB SHF	94-97	F (F41)	2	26039027
	7-N21	7.243	INSULATOR, FRT STAB SHF	94-95	F (FE2) (EXC 1LE)	2	26039030
	7-N21	7.243	INSULATOR, FRT STAB SHF	96-97	F (FE2, WU8, 1LE)	2	10288551
	7-N21	7.243	INSULATOR, FRT STAB SHF	96-97	F (FE2) (EXC WU8, 1LE)	2	26039030

cardiagn.com

	7-N21	7.243	INSULATOR, FRT STAB SHF	98-99	F (FE4, FE7)	2	10288551
	7-N21	7.243	INSULATOR, FRT STAB SHF	98-02	F (F41)	2	10298575
	7-N21	7.243	INSULATOR, FRT STAB SHF	98-99	F (FE2)	2	26039030
	7-N21	7.243	INSULATOR, FRT STAB SHF	00-02	F (FE4)	2	10288551
	7-N21	7.243	INSULATOR, FRT STAB SHF	00-02	F67 (FE2)	2	10288551
38.	7-N19	7.039	BOLT, FRT C/MBR (M12X1.75X92, 49) (SPL REDUCED SHANK, CONE PT) ...	94-02	F	4	10234622
39.	7-N20	7.242	BRACKET, FRT STAB SHF	94-02	F	2	10164141
40.	7-N20	7.242	BOLT, FRT STAB SHF BRKT (HEX W/CON WA-10X1.5X25) (6.525) .	94-02	F	8	1638817
41.	7-N19	7.039	NUT, FRT C/MBR	94-02	F	4	10156327
42.		N.S.	PLUG, DRIVETRAIN & FRT SUSP FRM NUT (FOR FACTORY SHIPPING PURPOSES ONLY) ...		.....		
43.	7-N19	7.039	BOLT, FRT C/MBR	94-02	F	2	10259353
44.	7-D9	6.172	BOLT, FRT LWR CONT ARM (BOLT, HFH, M14X2X86.5, 40.5 THD, PO)	94-02	F	2	10154163
45.		8.915	NUT, HFH, 10X1.5 6H THD, 21.3 OD, 9.8 THK 13 HEX DR, GRD 9, ZF (FRT S/ABS LWR BRKT) (8.917)	94-02	.....	4	10255857
46.	7-N22	7.345	ABSORBER, FRT SHK	94-97	F (FE2) (EXC 1LE)	2	22140169
	7-N22	7.345	ABSORBER, FRT SHK	94-97	F (F41)	2	22151319
	7-N22	7.345	ABSORBER, FRT SHK (AC-DELCO #22182498)	94-97	F (FE2)	2	22182498
	7-N22	7.345	ABSORBER, FRT SHK (AC-DELCO #530-114)	94-00	FP	2	88945282
	7-N22	7.345	ABSORBER, FRT SHK	98	F (FE4)	2	22166717
	7-N22	7.345	ABSORBER, FRT SHK (AC-DELCO #540-27)	98	F (FE2)	1	22199128
	7-N22	7.345	ABSORBER, FRT SHK	98	F67-87 (F41)	2	22182495
	7-N22	7.345	ABSORBER, FRT SHK	99	F (FE2)	2	22182495
	7-N22	7.345	ABSORBER, FRT SHK	99-02	F (F41)	2	22182495
	7-N22	7.345	ABSORBER, FRT SHK (AC-DELCO #22182498)	99-02	F (FE4)	2	22182498
	7-N22	7.345	ABSORBER, FRT SHK	99	F67 (FE2)	2	22182495
	7-N22	7.345	ABSORBER, FRT SHK	01-02	F67 (FE2)	1	22199127
47.	7-N23	7.395	BUMPER, FRT S/ABS UPR (CODE DZ, NM, ZR, ZP, ZK, ZL, ZM, ZN, PR, PS, PT, PU, PW, PZ) .	98-99	F (FE2, FE4, FE7)	2	22128877
	7-N23	7.395	BUMPER, FRT S/ABS UPR (CODE DZ, NM, ZR, ZP, ZK, ZL, ZM, ZN, PR, PS, PT, PU, PW, PZ) .	99	F (F41)	2	22128877
	7-N23	7.395	BUMPER, FRT S/ABS UPR (CODE HW, HX, GL, GM, GN, GR, HA, HB, HD, HE, HG, AS, AT, AV, AW, AX, AY, BA, BB, BD, BE, BG, BN, BJ, BK, BL, BM, BH)	94	F	2	22128877
	7-N23	7.395	BUMPER, FRT S/ABS UPR (CODE HW, HX, GL, GM, GN, GR, HA, HB, HD, HE, HG, AS, AT, AV, AW, AX, AY, BA, BB, BD, BE, BG, AJ, AK, AL, AM, AN, AR, BJ, BK, BL, BM, BN, BH)	95	F	2	22128877

cardiagn.com

	7-N23	7.395	**BUMPER**, FRT S/ABS UPR (CODE PR, PS, PT, PU, PW, PZ, ZR, ZP, ZK, ZL, ZM, ZN, DZ, NM) .	00-02	F	2	22128877
	7-N23	7.395	**BUMPER**, FRT S/ABS UPR (CODE R8, HW, AA, AJ, BA, BB, BD, BE, BG, BH, BJ, BK, BL, BM, HX, GL, GM, GN, GR AB, AD, AK, AL, AM, AN, AR, ZJ, HA, HB, HD, HE, HG)	97	F	2	22128877
	7-N23	7.395	**BUMPER**, FRT S/ABS UPR (CODE R8, HW, AJ, BA, BB, BD, BE, BG, BH, BJ, BK, BL, BM, HA, HB, HD, HE, HG, AA, AK, AL, AM, AN, AR, HX, GL, GM, GN, GR, AB, AD)	96	F	2	22128877
48.	7-N25	7.420	**INSULATOR**, FRT SPR LWR	94-02	F	2	22113814
49.	7-N23	7.371	**SHIELD**, FRT S/ABS DUST (CODE ZR, PR, PS, PT, PU, PW, PZ, ZP, ZK, ZL, ZM, ZN, DZ, NM) .	94-02	F	2	22114311
50.	7-N24	7.412	**SPRING**, FRT (CODE AA, AB, AC, AD, AF, AH, AJ, AK, AM, AN) .	01-02	F (F41)	2	22133437
	7-N24	7.412	**SPRING**, FRT (CODE AA, AB, AC, AD, AF, AH, AJ, AK, AM, AN) .	01	F (F41)	2	22197223
	7-N24	7.412	**SPRING**, FRT (CODE AA, AB, AD, AJ, AK, AL, GL, HW, HX)	97	F	2	22077189
	7-N24	7.412	**SPRING**, FRT (CODE AM, AN, AR, GM, GN, GR)	97	F	2	22133437
	7-N24	7.412	**SPRING**, FRT (CODE AM, AN, AR, GM, GN, GR)	97	F	2	22197223
	7-N24	7.412	**SPRING**, FRT (CODE BA, BB. BD, BH, BK, HA, HB, HD, BJ)	97	F	2	22077195
	7-N24	7.412	**SPRING**, FRT (CODE BA, BB, BD, BH, BK, HA, HB, HD, BJ)	97	F	2	22197228
	7-N24	7.412	**SPRING**, FRT (CODE BB, BJ, BD, BK, BA, BH, HD, HA, HB)	94	F	2	22077195
	7-N24	7.412	**SPRING**, FRT (CODE BB, BJ, BD, BK, BA, BH, HD, HA, HB)	94	F	2	22197228
	7-N24	7.412	**SPRING**, FRT (CODE BB, BJ, BD, BK, BA, BH, HB, HD)	95-96	F	2	22077195
	7-N24	7.412	**SPRING**, FRT (CODE BB, BJ, BD, BK, BA, BH, HB, HD)	95-96	F	2	22197228
	7-N24	7.412	**SPRING**, FRT (CODE BE, BG, BL, BM, HE, HG)	97	F	2	22077197
	7-N24	7.412	**SPRING**, FRT (CODE BE, BG, BL, BM, HE, HG)	97	F	2	22197230
	7-N24	7.412	**SPRING**, FRT (CODE BE, BL, BG, BM, EK, EL, EY, GA, GG, GH, HE, HG, HL, HM, HT, HV, BE, BL, BG, BM)	94-96	F	2	22077197
	7-N24	7.412	**SPRING**, FRT (CODE BE, BL, BG, BM, EK, EL. EY, GA, GG, GH, HE, HG, HL, HM, HT, HV, BE, BL, BG, BM)	94-96	F	2	22197230
	7-N24	7.412	**SPRING**, FRT (CODE BM, BN, BP, CD, DF, PW)	02	F (F41)	2	22133437
	7-N24	7.412	**SPRING**, FRT (CODE BM, BN. BP, CD, DF, PW)	02	F (F41)	2	22197223
	7-N24	7.412	**SPRING**, FRT (CODE BN)	94-96	F	2	22132887

cardiagn.com

	7-N24	7.412	SPRING, FRT (CODE BR, BS, CH)	02	F (FE2, FE4)	2	22077195
	7-N24	7.412	SPRING, FRT (CODE BR, BS, CH)	02	F (FE2, FE4)	2	22197228
	7-N24	7.412	SPRING, FRT (CODE BT, CJ)	02	F (FE2, FE4)	2	22077197
	7-N24	7.412	SPRING, FRT (CODE BT, CJ)	02	F (FE2, FE4)	2	22197230
	7-N24	7.412	SPRING, FRT (CODE DN, DR, DX, DY, GJ, GK, GL, GV, GT, HW, HX, HY, AT, AV, AS)	94-96	F	2	22077189
	7-N24	7.412	SPRING, FRT (CODE DS, DT, DV, EA, EB, ED, GM, GN, GR, GW, GX, GY, AW, AX, AY)	94-96	F	2	22133437
	7-N24	7.412	SPRING, FRT (CODE DS, DT, DV, EA, EB, ED, GM, GN, GR, GW, GX, GY, AW, AX, AY)	94-96	F	2	22197223
	7-N24	7.412	SPRING, FRT (CODE NM)	98	F	2	22132887
	7-N24	7.412	SPRING, FRT (CODE NM)	98	F (FE4)	2	22132887
	7-N24	7.412	SPRING, FRT (CODE PR, PS, PT, PU, PW, PZ)	99-02	F (F41)	2	22133437
	7-N24	7.412	SPRING, FRT (CODE PR, PS, PT, PU, PW, PZ)	99-02	F (F41)	2	22197223
	7-N24	7.412	SPRING, FRT (CODE PR, PU, PZ)	98	F (F41)	2	22133437
	7-N24	7.412	SPRING, FRT (CODE PS)	98	F (F41)	2	22133435
	7-N24	7.412	SPRING, FRT (CODE PT)	98	F67 (F41)	2	22133437
	7-N24	7.412	SPRING, FRT (CODE PT)	98	F67 (F41)	2	22197223
	7-N24	7.412	SPRING, FRT (CODE PU)	98	F (F41)	2	22197223
	7-N24	7.412	SPRING, FRT (CODE PW)	98	F67 (F41)	2	22133437
	7-N24	7.412	SPRING, FRT (CODE PW)	98	F67 (F41)	2	22133438
	7-N24	7.412	SPRING, FRT (CODE PW)	98	F67 (F41)	2	22197223
	7-N24	7.412	SPRING, FRT (CODE PW, PZ)	99-00	F (F41)	2	22133438
	7-N24	7.412	SPRING, FRT (CODE R8)	97	F	2	22132887
	7-N24	7.412	SPRING, FRT (CODE ZK, ZL, ZP)	98-02	F (FE2, FE4)	2	22077195
	7-N24	7.412	SPRING, FRT (CODE ZK, ZL, ZP)	98-02	F (FE2, FE4)	2	22197228
	7-N24	7.412	SPRING, FRT (CODE ZM, ZN)	98-02	F (FE2, FE4)	2	22077197
	7-N24	7.412	SPRING, FRT (CODE ZM, ZN)	98-02	F (FE2, FE4)	2	22197230
	7-N24	7.412	SPRING, FRT (CODE ZM, ZN)	98-02	F67 (FE4)	2	22077197
51.	7-N23	7.395	RETAINER, FRT S/ABS DUST SHLD (CODE ZP, ZK, ZL, ZM, ZN, PR, PS, PT, PU, PW, PZ)	94-98	F	2	22129944
	7-N23	7.395	RETAINER, FRT S/ABS DUST SHLD (CODE ZR, PR, PS, PT, PU, PW, PZ, ZP, ZK, ZL, ZM, ZN, DZ, NM)	99-02	F	2	22129944
52.	7-N23	7.395	INSULATOR, FRT S/ABS	94-02	F	2	17999212
53.	7-N23	7.395	MOUNT, FRT S/ABS UPR	94-02	F	LH	22146933
	7-N23	7.395	MOUNT, FRT S/ABS UPR	94-02	F	RH	22146934
54.		8.917	NUT, WA INSERT TORQ HEX FLANGE, TYPE A, M10X1.5, 510M, ZC (FRT S/ABS)	94-02		2	11515604
55.		8.900	BOLT, HFH, M12X1.75X65, 30 THD, 10.9, POR (FRT UPR CONT ARM) (PART OF 8)	94-02		4	11514280
56.	7-N19	7.039	BRACE, FRT C/MBR (RR OF C/MBR) (RR LOC)	94-02	F67	RH	10247922
57.	7-N19	7.039	BRACE, FRT C/MBR (RR OF C/MBR) (RR LOC)	94-02	F67	LH	10247921

cardiagn.com

58.	7-N19	7.039	BRACE, FRT C/MBR (FRT OF C/MBR)	94-02	F67	2	10247920
59.		8.900	BOLT, HEX FLNG HD (8X1.25X25) (PE 9.8) (FRT C/MBR BR)	94-02	F	8	11514155
60.	7-N23	7.347	WASHER, FRT S/ABS (CODES:ZP, ZR, PR, PS, PT, PU, PW, PZ, ZK, ZL, ZM, ZN, DZ, NM)	94-02	F	2	25325

SERVICE KITS

1.	7-N19	7.240	LINK, FRT STAB SHF (INCLS 24, 25, 26, 30, 31)	94-02	F	2	10164176
	7-N19	7.240	LINK, FRT STAB SHF (INCLS 24, 25, 26, 30, 31)	94-97	F (FE2)	2	10221779
	7-N19	7.240	LINK, FRT STAB SHF (INCLS 24, 25, 26, 30, 31)	98-99	F (FE2, FE4, FE7)	2	10221779
	7-N19	7.240	LINK, FRT STAB SHF (INCLS 24, 25, 26, 30, 31)	00-02	F (FE2, FE4)	2	10221779

RPO DEFINITIONS

FE2 - SUSPENSION SYSTEM,RIDE AND HANDLING
FE4 - SUSPENSION SYSTEM SPECIAL RIDE & HANDLING
FE7 - SUSPENSION SYSTEM,FRONT AND REAR,HEAVY DUTY
F41 - SUSPENSION,FIRM RIDE HANDLING,FRONT AND REAR
JAF - BRAKE PROVISIONS EUROPE
J1F - BRAKE,SPECIAL(EXPORT)
J65 - BRAKE SYSTEM,POWER,FRONT AND REAR DISC
K34 - CRUISE CONTROL,AUTOMATIC,ELECTRONIC
LS1 - ENGINE GAS, 8 CYL, 5.7L, SFI, ALUMINUM ENGINE
LT1 - ENGINE-GAS, 8 CYL, 5.7L(5.7P),MFI,HO
L32 - ENGINE,3.4L,V6,(3.4S),SFI,OHV
L36 - ENGINE GAS, 6 CYL, 3.8K, MFI, V6, HO (ERV6 SERIES)
WU8 - SALES PACKAGE Z28 SS UPFITTER
Z4C - APPEARANCE PACKAGE 35TH ANNIVERSARY
1LE - PERFORMANCE PACKAGE COMPONENTS

cardiagn.com

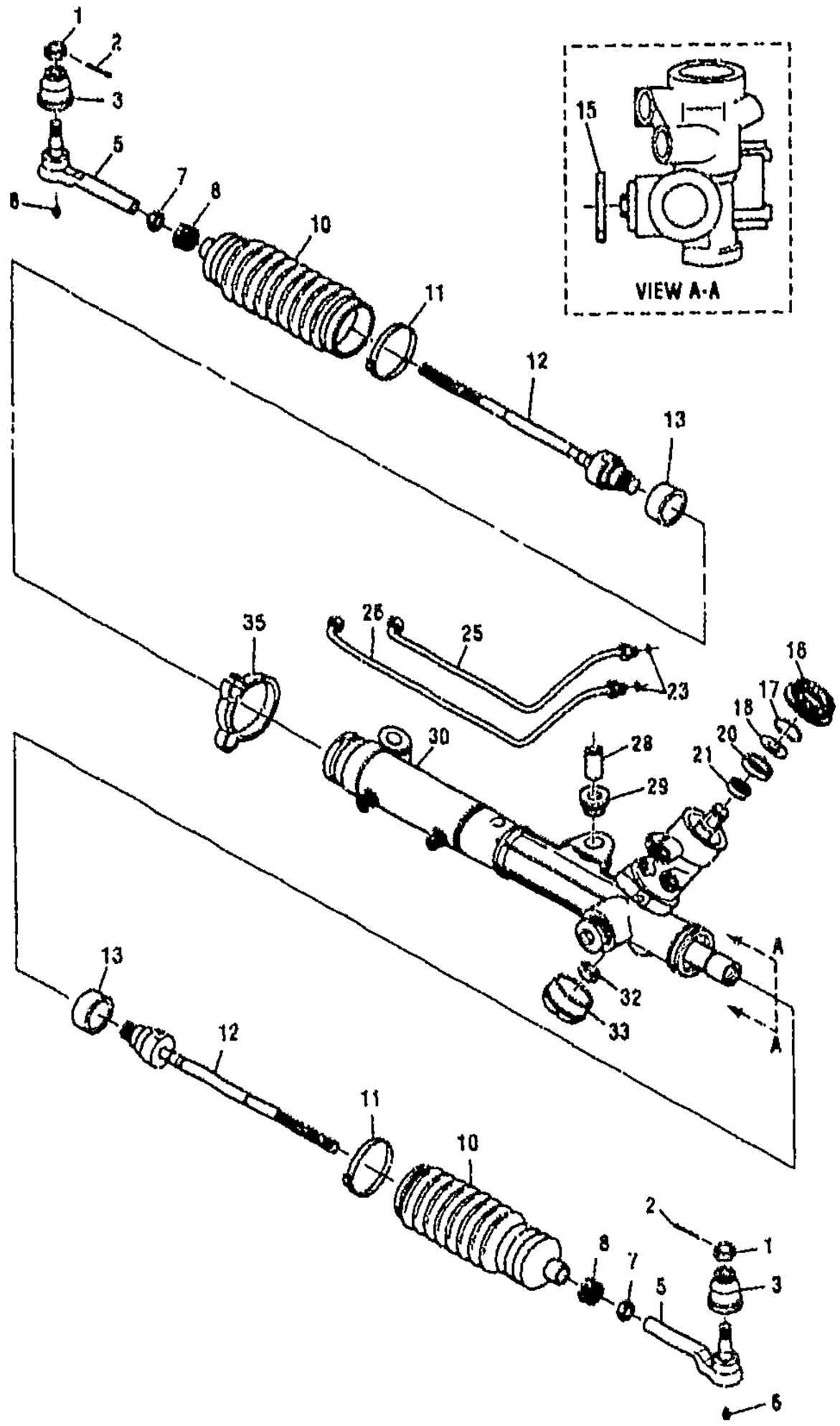

S93.5F-G-1

GM06-140

1993 F STEERING GEAR ASM POWER

1.	7-D10	6.234	NUT, STRG LNKG OTR TIE ROD (BALL JNT TO KNU) (PART OF 5) (M12X1.25X11.95) (TO KNUCKLE) (5.416)	93 F	2	25611428
2.		8.938	PIN, COTTER 1/8 X 1 1/2 (PART OF 5)	93	AR	103387

cardiagn.com

3.	7-D10	6.242	SEAL, STRG LNKG OTR TIE ROD (PART OF 5)	93	F (FE2)	2	7828084
5.	7-D10	6.233	ROD KIT, STRG LNKG OTR TIE (INCLS 1, 2, 3, 7) (AC-DELCO #36-9506)	93	F	2	21011027
6.		8.984	FITTING, GREASE, 90 DEG, 1/4-28, CAD/ZN (STRG LNKG OTR TIE)	93		AR	7842586
7.	7-D10	6.234	NUT, STRG LNKG INR TIE ROD (PART OF 5, 12) (M14X1.5X11, 510M (5), ZC) (6.526)	93	F	2	26017267
8.	7-D10	6.242	CLAMP, S/GR BOOT (PART OF 10, 12) (TIE ROD END) (OTR)	93			26013335
10.	7-D10	6.242	BOOT KIT, S/GR (INCLS 8, 11) (INCLS BOOT, CLAMPS, GREASE)	93	F	2	21011025
	7-D10	6.242	BOOT KIT, S/GR (INCLS 8, 11) (AC-DELCO #45A7055)	93	F0 (LT1) (WITH FIRM RIDE AND HANDLING SUSPENSION)	1	88910854
	7-D10	6.242	BOOT KIT, S/GR (INCLS 8, 11) (AC-DELCO #45A7055)	93	F0 (L32) (WITH FIRM RIDE AND HANDLING SUSPENSION)	1	88910854
	7-D10	6.242	BOOT KIT, S/GR (INCLS 8, 11) (AC-DELCO #45A7055)	93	FP (LT1) (WITH FIRM RIDE AND HANDLING SUSPENSION)	1	88910854
	7-D10	6.242	BOOT KIT, S/GR (INCLS 8, 11) (AC-DELCO #45A7055)	93	FP (L32) (WITH FIRM RIDE AND HANDLING SUSPENSION)	1	88910854
11.	7-D10	6.242	CLAMP, S/GR BOOT (PART OF 10, 12) (56MM DIA)	93			7840233
12.	7-D9	6.230	ROD KIT, STRG LNKG INR TIE (INCLS 7, 8, 11)	93	F	2	21011026
13.	7-D24	6.865	RING, S/GR SHF DPNR (R&P)	93	F (FE2, F41)	2	7831234
15.	7-D24	6.832	NUT, S/GR RACK ADJR (M32X1.5) (HEX) (6.822)	93	F (FE2, F41)	1	7819367
16.		N.S.	ADAPTER, STRG COL DA SEAL				
17.	7-D17	6.552	RING, S/GR STUB SHF SEAL RET (*KIT1)	93	F (F41, FE2)	1	7828017
18.		N.S.	SEAL, STUB SHFT DUST (*KIT1)	93			
20.		N.S.	SEAL, STUB SHFT (*KIT1)				
21.		N.S.	BEARING, ANNULUS ASM NEEDLE (*KIT1)				
23.	7-D22	6.674	SEAL, S/GR PIPE (O RING) (PART 25, 26)	93	F (FE2, F41)	2	26015539
25.	7-D21	6.670	PIPE, S/GR (INCLS 23) (SHORT)	93	F (F41, FE2)	RH	26019446
26.	7-D21	6.670	PIPE, S/GR (INCLS 23) (LONG)	93	F (F41, FE2)	LH	26019447
28.	7-D12	6.509	SLEEVE, S/GR BUSH (AC-DELCO #36-9533)	93	F	1	14088178
29.	7-D12	6.509	INSULATOR, S/GR (AC-DELCO #36-9530)	93	F	2	10052902
30.	7-D11	6.508	GEAR KIT, STRG (REMAN) (W/ INR TIE ROD) (AC-DELCO #36-9026)	93	F (L32, LT1, F41)	1	26044843
	7-D11	6.508	GEAR KIT, STRG (REMAN) (W/ INR TIE ROD) (AC-DELCO #36-9027)	93	F (L32, LT1, FE2)	1	26044844
32.		8.917	NUT, HEX PRVG TORQ M10X1.5XGR10XCAD	93		AR	11501033

cardiagn.com

33.	7-D23	6.807	COVER, S/GR HSG (6.824)	93	F	1	7846884
35.	7-D22	6.672	CLIP, P/S GR PIPE	93	F (FE2)	1	26039827

SERVICE KITS

1.	7-D17	6.525	BEARING KIT, S/GR STUB SHF (INCLS 17, 18, 20, 21 <2-PIECE SEAL>)	93	F (FE2, F41)	1	26023755

RPO DEFINITIONS

FE2 -- SUSPENSION SYSTEM,RIDE AND HANDLING
F41 -- SUSPENSION,FIRM RIDE HANDLING,FRONT AND REAR
LT1 -- ENGINE-GAS, 8 CYL, 5.7L(5.7P),MFI,HO
L32 -- ENGINE,3.4L,V6,(3.4S),SFI,OHV

cardiagn.com

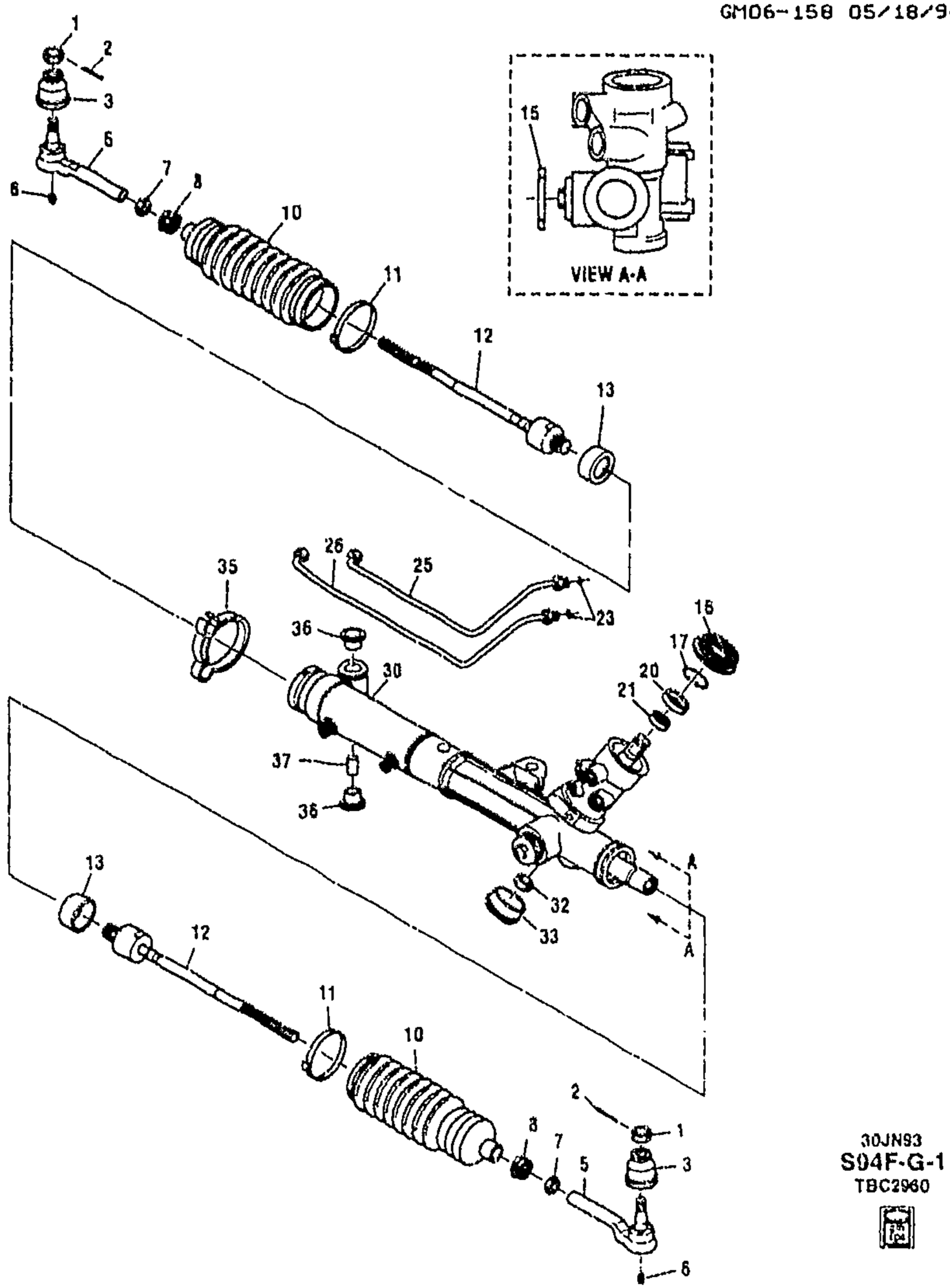

GM06-158

1994-2002 F STEERING GEAR ASM POWER

1.	7-D10	6.234	NUT, STRG LNKG OTR TIE ROD (BALL JNT TO KNU) (PART OF 5) (M12X1.25X11.95) (TO KNUCKLE) (5.416)	94-02 F	2	25611428
2.		8.038	PIN, COTTER 1/8 X 1 1/2 (PART OF 5)	94-02	AR	103387

cardiagram.com

3.	7-D10	6.242	**SEAL**, STRG LNKG OTR TIE ROD (PART OF 5)	94-02	F (FE2)	2	7828084
5.	7-D10	6.233	**ROD KIT**, STRG LNKG OTR TIE (INCLS 1, 2, 3, 7) (AC-DELCO #36-9506)	94-02	F	2	21011027
6.		8.984	**FITTING**, GREASE, 90 DEG, 1/4-28, CAD/ZN (STRG LNKG OTR TIE)	94-02		AR	7842586
7.	7-D10	6.234	**NUT**, STRG LNKG INR TIE ROD (PART OF 5, 12) (M14X1.5X11, 510M (5), ZC) (6.526)	94-02	F	2	26017267
8.	7-D10	6.242	**CLAMP**, S/GR BOOT (PART OF 10, 12) (TIE ROD END) (OTR)	94-02	F		26013335
10.	7-D10	6.242	**BOOT KIT**, S/GR (INCLS 8, 11) (INCLS BOOT, CLAMPS, GREASE)	94-02	F	2	21011025
	7-D10	6.242	**BOOT KIT**, S/GR (INCLS 8, 11) (AC-DELCO #45A7055)	94-97	F0 (LT1) (WITH FIRM RIDE AND HANDLING SUSPENSION)	1	88910854
	7-D10	6.242	**BOOT KIT**, S/GR (INCLS 8, 11) (AC-DELCO #45A7055)	94-95	F0 (L32) (WITH FIRM RIDE AND HANDLING SUSPENSION)	1	88910854
	7-D10	6.242	**BOOT KIT**, S/GR (INCLS 8, 11) (AC-DELCO #45A7055)	94-97	FP (LT1) (WITH FIRM RIDE AND HANDLING SUSPENSION)	1	88910854
	7-D10	6.242	**BOOT KIT**, S/GR (INCLS 8, 11) (AC-DELCO #45A7055)	94-95	FP (L32) (WITH FIRM RIDE AND HANDLING SUSPENSION)	1	88910854
	7-D10	6.242	**BOOT KIT**, S/GR (INCLS 8, 11) (AC-DELCO #45A7055)	95-99	F0 (L36) (WITH FIRM RIDE AND HANDLING SUSPENSION)	1	88910854
	7-D10	6.242	**BOOT KIT**, S/GR (INCLS 8, 11) (AC-DELCO #45A7055)	95-99	FP (L36) (WITH FIRM RIDE AND HANDLING SUSPENSION)	1	88910854
	7-D10	6.242	**BOOT KIT**, S/GR (INCLS 8, 11) (AC-DELCO #45A7055)	98-99	F0 (LS1) (WITH FIRM RIDE AND HANDLING SUSPENSION)	1	88910854
	7-D10	6.242	**BOOT KIT**, S/GR (INCLS 8, 11) (AC-DELCO #45A7055)	98-99	FP (LS1) (WITH FIRM RIDE AND HANDLING SUSPENSION)	1	88910854
11.	7-D10	6.242	**CLAMP**, S/GR BOOT (PART OF 10, 12) (56MM DIA)	94-02			7840235
12.	7-D9	6.230	**ROD KIT**, STRG LNKG INR TIE (INCLS 7, 8, 11)	94-02	F	2	21011026
13.	7-D24	6.865	**RING**, S/GR SHF DPNR (R&P)	94-97	F (FE2, F41)	2	7831234
	7-D24	6.865	**RING**, S/GR SHF DPNR (R&P)	98-02	F	2	7831234
	7-D24	6.865	**RING**, S/GR SHF DPNR (R&P)	02	F (F41) (EXC Y87)	2	7831234
15.	7-D24	6.832	**NUT**, S/GR RACK ADJR (M32X1.5) (HEX) (6.822)	94-97	F (FE2, F41)	1	7819367
	7-D24	6.832	**NUT**, S/GR RACK ADJR (M32X1.5) (HEX) (6.822)	98-02	F	1	7819367
16.		N.S.	**ADAPTER**, STRG COL DA SEAL				
17.	7-D17	6.552	**RING**, S/GR STUB SHF SEAL RET (*KIT1)	94-97	F (F41, FE2)	1	7828017
	7-D17	6.552	**RING**, S/GR STUB SHF SEAL RET (*KIT1)	98-02	F	1	7828017
	7-D17	6.552	**RING**, S/GR STUB SHF SEAL RET (*KIT1)	02	F (F41) (EXC Y87)	1	7828017
20.		N.S.	**SEAL**, STUB SHFT (*KIT1)				

cardiagn.com

21.		N.S.	BEARING, ANNULUS ASM NEEDLE (*KIT1)				
23.	7-D22	6.674	SEAL, S/GR PIPE (O RING) (PART 25, 26)	94-97	F (FE2, F41)	2	26015539
	7-D22	6.674	SEAL, S/GR PIPE (O RING) (PART 25, 26)	98-99	F (F41)	2	26015539
	7-D22	6.674	SEAL, S/GR PIPE (O RING) (PART 25, 26)	98-99	F (FE2, FE4, FE7)	2	26043467
	7-D22	6.674	SEAL, S/GR PIPE (O RING) (PART 25, 26)	00-02	F (FE2, FE4)	2	26043467
	7-D22	6.674	SEAL, S/GR PIPE (O RING) (PART 25, 26)	00-02	F (F41, Y87)	2	26043467
	7-D22	6.674	SEAL, S/GR PIPE (O RING) (PART 25, 26)	02	F (F41) (EXC Y87)	2	26043467
25.	7-D21	6.670	PIPE, S/GR (INCLS 23) (SHORT)	94-97	F (F41, FE2)	RH	26019448
	7-D21	6.670	PIPE, S/GR (INCLS 23) (SHORT)	98-02	F (F41)	RH	26019448
	7-D21	6.670	PIPE, S/GR (INCLS 23) (SHORT)	00-02		RH	26060712
	7-D21	6.670	PIPE, S/GR (INCLS 23) (SHORT)	98-99	F (FE2, FE4, FE7)	RH	26060712
	7-D21	6.670	PIPE, S/GR (INCLS 23) (SHORT)	00-02	F (FE2, FE4)	RH	26060712
	7-D21	6.670	PIPE, S/GR (INCLS 23) (SHORT)	00-02	F (F41)	RH	26060712
26.	7-D21	6.670	PIPE, S/GR (INCLS 23) (LONG)	98-99	F (FE2, FE4, FE7)	LH	26060713
	7-D21	6.670	PIPE, S/GR (INCLS 23) (LONG)	00-02	F (FE2, FE4)	LH	26060713
	7-D21	6.670	PIPE, S/GR (INCLS 23) (LONG)	00-02	F (F41)	LH	26060713
	7-D21	6.670	PIPE, S/GR (INCLS 23) (LONG)	00-02	F	LH	26060713
30.	7-D11	6.508	GEAR KIT, STRG (REMAN)	98-99	F (FE2, FE4, FE7)	1	26060047
	7-D11	6.508	GEAR KIT, STRG (REMAN)	00-02	F (FE2, FE4, FE7)	1	26062311
	7-D11	6.508	GEAR KIT, STRG (REMAN)	00-02	F (F41, Y87)	1	26062311
	7-D11	6.508	GEAR KIT, STRG (REMAN) (AC-DELCO #36-9212)	00-02	F (F41) (EXC Y87)	1	26077996
	7-D11	6.508	GEAR KIT, STRG (REMAN) (W/ INNER TIE ROD) (AC-DELCO #36-9026)	98-99	F (F[illegible] (EXC Y87)	1	26044843
	7-D11	6.508	GEAR KIT, STRG (REMAN) (W/ INR TIE ROD) (AC-DELCO #36-9026)	94	F (L32, LT1, F41)	1	26044843
	7-D11	6.508	GEAR KIT, STRG (REMAN) (W/ INR TIE ROD) (AC-DELCO #36-9027)	94	F (L32, LT1, FE2)	1	26044844
	7-D11	6.508	GEAR KIT, STRG (REMAN) (W/ INR TIE ROD) (AC-DELCO #36-9026)	95	F (L32, L36, LT1, F41)	1	26044843
	7-D11	6.508	GEAR KIT, STRG (REMAN) (W/ INR TIE ROD) (AC-DELCO #36-9027)	95	F (L32, L36, LT1, FE2)	1	26044844
	7-D11	6.508	GEAR KIT, STRG (REMAN) (W/ INR TIE ROD) (AC-DELCO #36-9026)	96-97	F (L36, LT1, F41) (EXC Y87)	1	26044843
	7-D11	6.508	GEAR KIT, STRG (REMAN) (W/ INR TIE ROD) (AC-DELCO #36-9027)	96-99	F (F41, Y87)	1	26044844
	7-D11	6.508	GEAR KIT, STRG (REMAN) (W/ INR TIE ROD) (AC-DELCO #36-9027)	96-97	F (L36, LT1, FE2)	1	26044844
32.		8.917	NUT, HEX PRVG TORQ M10X1.5XGR10XCAD	94-02		AR	11501033
33	7-D23	6.807	COVER, S/GR HSG (6.824)	94-02	F	1	7846884
[illegible]	7-D22	6.672	CLIP, P/S GR PIPE	94	F (FE2)	1	26039827

cardiagn.com

	7-D22	6.672	CLIP, P/S GR PIPE	94	F (F41)	1	26039827
	7-D22	6.672	CLIP, P/S GR PIPE	95	F (FE2, F41)	1	26039827
		N.S.	CLIP, P/S GR PIPE	96-02	.....		26039827
36.	7-D12	6.509	**INSULATOR**, S/GR (AC-DELCO #36-9530)	94-02	F	2	10062902
	7-D12	6.509	**INSULATOR**, S/GR (AC-DELCO #36-9530)	02	F (F41) (EXC Y87)	2	10062902
37.	7-D12	6.509	**SLEEVE**, S/GR BUSH (AC-DELCO #36-9533)	94-02	F	1	14088178
	7-D12	6.509	**SLEEVE**, S/GR BUSH (AC-DELCO #36-9533)	02	F (F41) (EXC Y87)	1	14088178

SERVICE KITS

1.	7-D17	6.525	**BEARING KIT**, S/GR STUB SHF (INCLS 17, 20, 21)	94-02	F	1	26032824
	7-D17	6.525	**BEARING KIT**, S/GR STUB SHF (INCLS 17, 20, 21)	02	F (F41) (EXC Y87)	1	26032824

RPO DEFINITIONS

FE2 – SUSPENSION SYSTEM,RIDE AND HANDLING
FE4 – SUSPENSION SYSTEM SPECIAL RIDE & HANDLING
FE7 – SUSPENSION SYSTEM,FRONT AND REAR,HEAVY DUTY
F41 – SUSPENSION,FIRM RIDE HANDLING,FRONT AND REAR
LS1 – ENGINE GAS, 8 CYL, 5.7L, SFI, ALUMINUM ENGINE
LT1 – ENGINE-GAS, 8 CYL, 5.7L(5.7P),MFI,HO
L32 – ENGINE,3.4L,V6,(3.4S),SFI,OHV
L36 – ENGINE GAS, 6 CYL, 3.8K, MFI, V6, HO (ERV6 SERIES)
Y87 – PERFORMANCE ENHANCEMENT 3800 GT

cardiagn.com

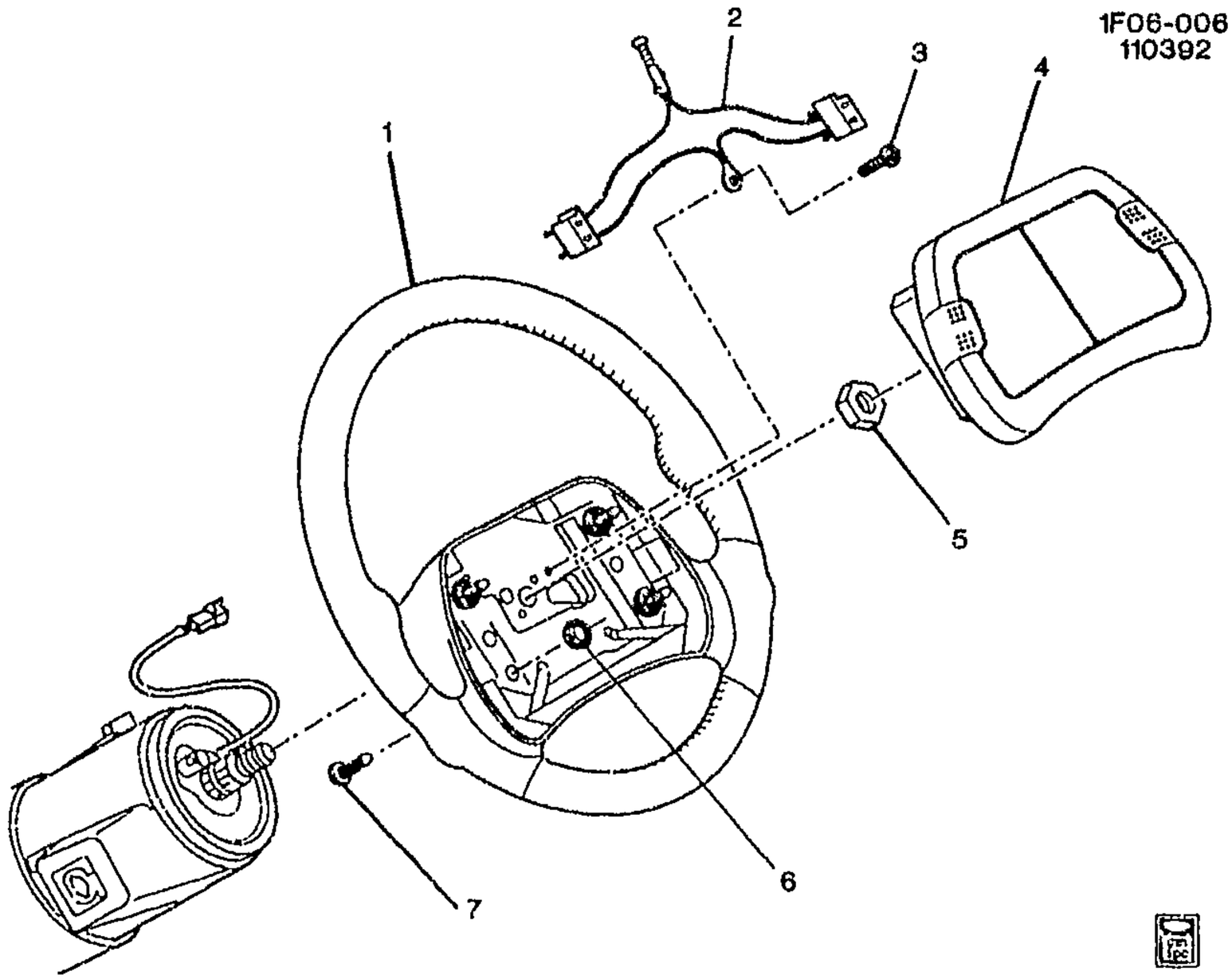

1F06-006

1993-2002 F STEERING WHEEL & HORN PARTS

1.	7-D13	6.513	WHEEL, STRG (INCLS 2, 3, 6, 7) .	93-99	F (NK3)	1	17998543
	7-D13	6.513	WHEEL, STRG (INCLS 2, 3, 6, 7) .	93-99	F (NP5)	1	17998544
	7-D13	6.513	WHEEL, STRG (INCLS 2, 3, 6, 7) .	00-02	F (NK3)	1	16825298
	7-D13	6.513	WHEEL, STRG (INCLS 2, 3, 6, 7) (INCLS RADIO SWITCHES)	00-02	F (NP5, UK3)	1	16825299
2.	7-N13	2.819	SWITCH, STRG WHL HORN (PART OF 1) (AC-DELCO #D1774A)	93-99	F (NP5, NK3)	1	17999094
	7-N13	2.819	SWITCH, STRG WHL HORN (PART OF 1) (AC-DELCO #D1902D)	00-02	F (NP5, UK3)	LH	16826138
	7-N13	2.819	SWITCH, STRG WHL HORN (PART OF 1) (AC-DELCO #D1984C)	00-02	F (NP5, UK3)	RH	16826139
3.		8.913	SCREW, PAN HD TORX, M4X.7X8, / THD, T20, CA (STRG WHL PAD (PART OF 1)	93-02	.....	1	11515178
4.	7-D13	6.512	MODULE, STRG WHL INFL RST (14.865)	93-97	F (AK5)	1	17998545
	7-D13	6.512	MODULE, STRG WHL INFL RST (14.865)	98	F (AK5)	1	10407547
	7-D13	6.512	MODULE, STRG WHL INFL RST (14.865)	99	F (AK5)	1	10409456
	7-D13	6.512	MODULE, STRG WHL INFL RST (14.865)	00-02	F (AK5)	1	10426848

cardiagn.com

5.	7–D13	6.515	NUT, STRG WHL (M14X1.5) (HFH TORQ PREV)	93–02	F	1	26056108
6.		8.921	NUT, PUSH–ON, M6X1, SPR STL, STYLE 1, POR (STRG WHL) (PART OF 1)	93–02	.....	4	14093869
7.		8.913	SCREW, METRIC TORX HD (M6X1.0X12.6) (PEOR 9.8) (PART OF 1)	93–02	.....	AR	10192577

RPO DEFINITIONS

AK5 – RESTRAINT SYSTEM,FRONT SEAT,INFLATABLE,DRIVER AND PASSENGER
NK3 – STEERING WHEEL,SPORT,SOFT RIM,SIMULATED LEATHER
NP5 – STEERING WHEEL,LEATHER WRAPPED
UK3 – ELECTRONIC SYSTEM,ACCESSORY CONTROL

cardiagn.com

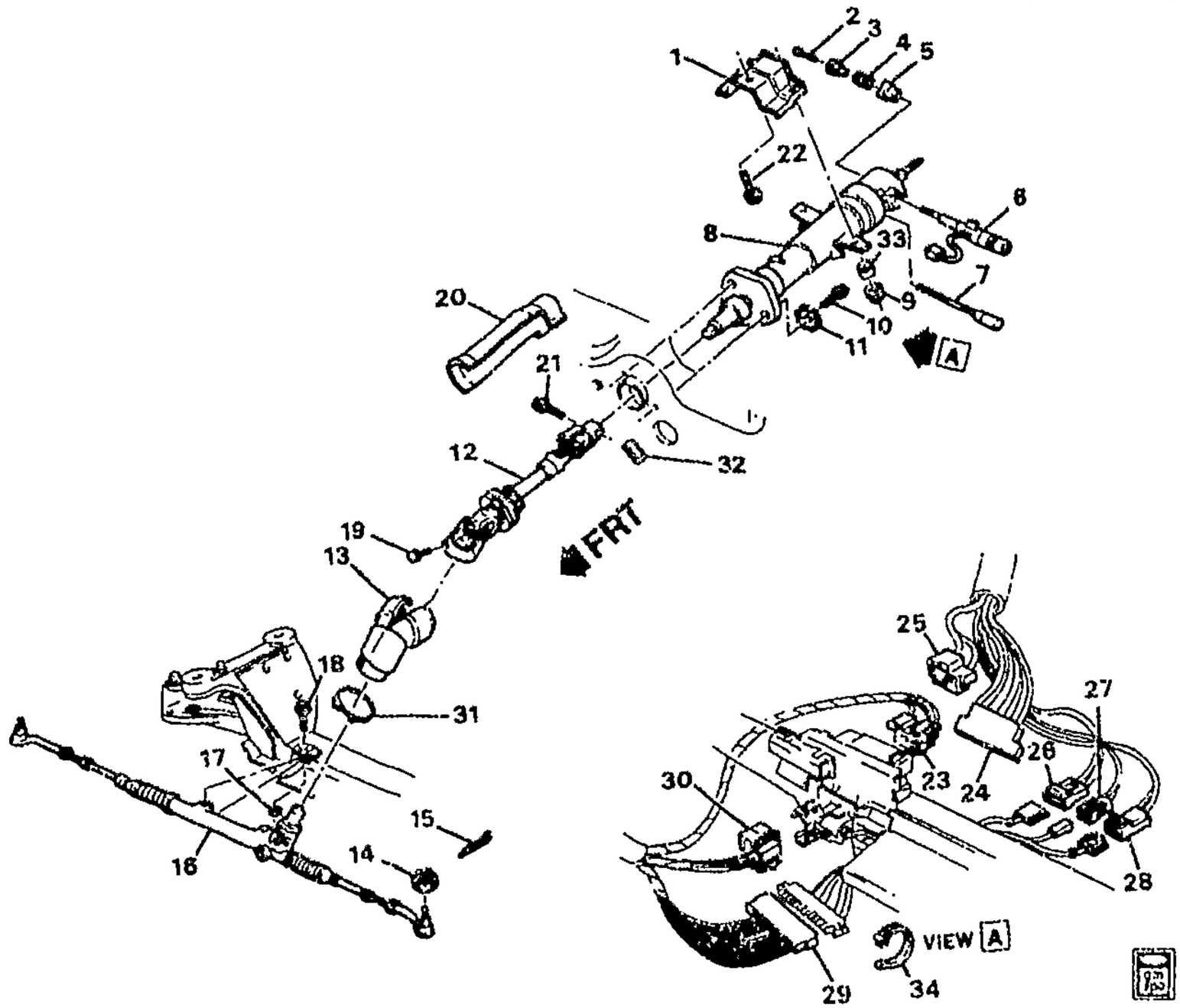

MF06-029

1993-2002 F STEERING SYSTEM & RELATED PARTS

1.	7-D23	6.760	**GUIDE**, STRG COL.	93-02	F	1	10401520
2.		8.977	**SCREW**, OV HD C/S C/R TAP M3.5X1.27X22 PC (HAZARD WRNG SW KNOB)	93-02		1	11503505
3.	7-N13	2.575	**PUSHBUTTON**, HAZARD WRNG SW (PAINT TO MATCH)	93-97	F	1	12337876
	7-N13	2.575	**PUSHBUTTON**, HAZARD WRNG SW (PAINT TO MATCH)	98-02	F (EXC T2J)	1	12337876
	7-N13	2.575	**PUSHBUTTON**, HAZARD WRNG SW	98-02	F (T2J) (EXPORT)	1	3529383
4.	7-N13	2.575	**SPRING**, HAZARD WRNG SW KNOB	93-02	F	1	3529384
5.	7-N13	2.575	**KNOB**, HAZARD WRNG SW	93	F	1	10098783
	7-N13	2.575	**KNOB**, HAZARD WRNG SW	94-97	F	1	12337964
	7-N13	2.575	**KNOB**, HAZARD WRNG SW	98-02	F (EXC T2J)	1	12337964
	7-N13	2.575	**KNOB**, HAZARD WRNG SW (BLACK)	98-02	F (T2J) (EXPORT)	1	3542859
6.	7-N14	2.897	**LEVER**, T/SIG & HDLP D/SW & WSW & WSWA	93	F (EXC K34)	1	10098784
	7-N14	2.897	**LEVER**, T/SIG & HDLP D/SW & WSW & WSWA (BLACK) (AC-DELCO #22510733)	94-98	F (EXC K34)	1	22510733

cardiagn.com

	7-N14	2.897	**LEVER**, T/SIG & HDLP D/SW & WSW & WSWA (BLACK) (AC-DELCO #22510733)	99	F (EXC K34)	1	22510733
	7-N14	2.897	**LEVER**, T/SIG & HDLP D/SW & CRCONT ACTR & WSW & WSWA (AC-DELCO #25140540)	93	F (K34) (EXC UK2)	1	25140540
	7-N14	2.897	**LEVER**, T/SIG & HDLP D/SW & CRCONT ACTR & WSW & WSWA (AC-DELCO #25140743)	94-02	F (K34) (EXC UK2)	1	25140743
	7-N14	2.897	**LEVER**, T/SIG & HDLP D/SW & CRCONT ACTR & WSW & WSWA (AC-DELCO #25140540)	93-02	F (K34, UK2) (EXPORT)	1	25140540
7.	7-D13	6.514	**LEVER**, STRG COL TILT WHL REL	93-99	F	1	3522019
	7-D13	6.514	**LEVER**, STRG COL TILT WHL REL	00-02	F	1	10024521
8.	7-D14	6.518	**COLUMN**, STRG (SEE STEERING COLUMN ILLUSTRATION FOR DETAILED VIEW)	93	F (M28, M29, M49)	1	26040398
	7-D14	6.518	**COLUMN**, STRG (SEE STEERING COLUMN ILLUSTRATION FOR DETAILED VIEW)	93	F (M28) (EXC T2J)	1	26040399
	7-D14	6.518	**COLUMN**, STRG (SEE STEERING COLUMN ILLUSTRATION FOR DETAILED VIEW)	94-97	F (MM6, M49)	1	26040398
	7-D14	6.518	**COLUMN**, STRG (SEE STEERING COLUMN ILLUSTRATION FOR DETAILED VIEW)	94-97	F (M30)	1	26040399
	7-D14	6.518	**COLUMN**, STRG (SEE STEERING COLUMN ILLUSTRATION FOR DETAILED VIEW)	98	F (MM6, M49) (EXC NP7)	1	26040398
	7-D14	6.518	**COLUMN**, STRG (SEE STEERING COLUMN ILLUSTRATION FOR DETAILED VIEW)	98	F (M30) (EXC NP7) ...	1	26040399
	7-D14	6.518	**COLUMN**, STRG (SEE STEERING COLUMN ILLUSTRATION FOR DETAILED VIEW)	99	F (MM6, M49) (EXC NP7)	1	26069854
	7-D14	6.518	**COLUMN**, STRG (SEE STEERING COLUMN ILLUSTRATION FOR DETAILED VIEW)	99	F (M30) (EXC NP7)	1	26069855
	7-D14	6.518	**COLUMN**, STRG (SEE STEERING COLUMN ILLUSTRATION FOR DETAILED VIEW)	00-02	F (MM6, M49) (EXC NP7, UK3)	1	26076221
	7-D14	6.518	**COLUMN**, STRG (SEE STEERING COLUMN ILLUSTRATION FOR DETAILED VIEW)	00-02	F (M30) (EXC NP7, UK3)	1	26076222

cardiagn.com

	7-D14	6.518	**COLUMN**, STRG (SEE STEERING COLUMN ILLUSTRATION FOR DETAILED VIEW)	00-02	F (MM6, M49, UK3) (EXC NP7)	1	26076224
	7-D14	6.518	**COLUMN**, STRG (SEE STEERING COLUMN ILLUSTRATION FOR DETAILED VIEW)	00-02	F (M30, UK3) (EXC NP7)	1	26076225
	7-D14	6.518	**COLUMN**, STRG (SEE STEERING COLUMN ILLUSTRATION FOR DETAILED VIEW)	01	F (M30, NP7, UK3)	1	26079400
	7-D14	6.518	**COLUMN**, STRG (SEE STEERING COLUMN ILLUSTRATION FOR DETAILED VIEW)	02	F (MM6, M49, NP7)	1	26079399
	7-D14	6.518	**COLUMN**, STRG (SEE STEERING COLUMN ILLUSTRATION FOR DETAILED VIEW)	02	F (M30, NP7)	1	26079400
	7-D14	6.518	**COLUMN**, STRG (SEE STEERING COLUMN ILLUSTRATION FOR DETAILED VIEW)	98	F (MM6, M49, NP7) (EXPORT)	1	26068461
	7-D14	6.518	**COLUMN**, STRG (SEE STEERING COLUMN ILLUSTRATION FOR DETAILED VIEW)	98	F (M30, NP7) (EXPORT)	1	26068462
	7-D14	6.518	**COLUMN**, STRG (SEE STEERING COLUMN ILLUSTRATION FOR DETAILED VIEW)	99	F (MM6, M49, NP7) (EXPORT)	1	26067397
	7-D14	6.518	**COLUMN**, STRG (SEE STEERING COLUMN ILLUSTRATION FOR DETAILED VIEW)	99	F (M30, NP7) (EXPORT)	1	26067398
	7-D14	6.518	**COLUMN**, STRG (SEE STEERING COLUMN ILLUSTRATION FOR DETAILED VIEW)	00-01	F (MM6, M49, NP7, UK3) (EXPORT)	1	26079399
	7-D14	6.518	**COLUMN**, STRG (SEE STEERING COLUMN ILLUSTRATION FOR DETAILED VIEW)	00	F (M30, NP7, UK3) (EXPORT)	1	26079400
9.		6.917	**NUT**, M8X1.25X7.1, ZC 10 (STRG COL UPR SUPT)	93-02		2	11515748
		8.929	**WASHER**, M10X 2.5 THK PHOS (STRG COL UPR SUPT) (AC-DELCO #11500324)	93-02		2	11500324
10.		8.977	**SCREW**, HEX W/FLAT WA (STRG COL)	93-02	F	AR	12337828
		8.932	**WASHER**, INT-EXT TOOTH LK6.5IDX22.80DX 1.42 THK ZC (STRG COL) (AC-DELCO #11501045)	93-02	F	AR	11501045

cardiagn.com

11.		8.932	**WASHER**, INT-EXT TOOTH LK6.5IDX22.80DX 1.42 THK ZC (STRG COL) (AC-DELCO #11501045)	93-02		1	11501045
12.	7-D16	6.524	**SHAFT**, S/GR CPLG	93-97	F	1	26020775
	7-D16	6.524	**SHAFT**, S/GR CPLG	98-99	F (L36)	1	26020775
	7-D16	6.524	**SHAFT**, S/GR CPLG	98-99	F (LS1)	1	26055910
	7-D16	6.524	**SHAFT**, S/GR CPLG	00-02	F	1	26055910
13.	7-D10	6.242	**BOOT**, S/GR (INTERMEDIATE)	93-97	F	1	10230317
	7-D10	6.242	**BOOT**, S/GR (INTERMEDIATE)	98-99	F (L36)	1	10230317
		N.S.	**BOOT**, S/GR (*KIT1)	00-02			
14.	7-D10	6.234	**NUT**, STRG LNKG OTR TIE ROD (BALL JNT TO KNU) (M12X1.25X11.95) (TO KNUCKLE) (5.416)	93-02	F	2	25611428
15.		8.938	**PIN**, COTTER, .125X1.250 (STRG LNKG OTR TIE ROD COT)	93-02		2	9440095
16.		N.S.	**GEAR**, STRG (SEE STEERING GEAR ILLUSTRATION FOR DETAILED VIEW)				
17.		8.917	**NUT-METRIC ALL METAL** DIR'L. PRVG TORQ TENS (S/GR)	93-02		AR	11516078
18.		8.900	**BOLT**, HFH M12X1.75X65 9.8 POR 26.6 OD DIM A-30 (S/GR)	93-02	F	2	11508580
19.	7-D17	6.525	**BOLT**, INTER STRG SHF (TO S/GR BOOT) (M10X1.5X39) (HFH NYLON LOCK)	93-02	F	1	26030302
20.	7-D17	6.525	**SHIELD**, S/GR CPLG SHLD HT	93-97	F (LT1)	1	10219844
		N.S.	**SHIELD**, S/GR CPLG SHLD HT	98-02			
21.	7-D17	6.525	**BOLT**, INTER STRG SHF (M10X1.5X39) (HFH NYLON LOCK)	93-02	F	1	26030302
22.		DISCON	**BOLT**, HEX M8-1.25X32 FULL THD ZC GRD 7 (STRG COL GDE) (8.900)	93-02		1	94009595
23.	7-N2	2.188	**CONNECTOR**, SW-IGN & START (BLUE) (5-WAY F) (W/LEADS) (2.195) (AC-DELCO #PT289)	93-02	F	1	12102602
24.	7-N5	2.530	**CONNECTOR**, INLINE-TO STRG COL HARN (SIGNAL/HORN CONN) (11-WAY F) (AC-DELCO #PT386)	93-02	F	1	12102756
25.	7-N2	2.188	**CONNECTOR**, SW-IGN & START (BLUE) (4-WAY F) (W/LEADS) (AC-DELCO #PT290)	93-02	F	1	12102603
26.		N.S.	**CONNECTOR**, INLINE-TO STRG COL HARN				
27.	7-N3	2.195	**CONNECTOR**, SW-THEFT DTRNT ALARM CUTOFF (BLACK) (2-WAY M W/LEADS) (2.535) (AC-DELCO #PT103)				12085481
28.	7-N25	14.865	**CONNECTOR**, INLINE-TO INFL RST STRG WHL MDL COIL (2-WAY M) (W/4 LEADS, IF 2 LEADS REQ USE 12126039) (AC-DELCO #PT764)	93-95	F	1	12126494

cardiagn.com

	7-N25	14.865	**CONNECTOR**, INLINE-TO INFL RST STRG WHL MDL COIL (2-WAY M) (W/2 LEADS, IF 4 LEADS REQ USE 12126494) (AC-DELCO #PT1217)	96-97	F	1	12126039
	7-N25	14.865	**CONNECTOR**, INLINE-TO INFL RST STRG WHL MDL COIL (2-WAY M) (W/4 LEADS, IF 2 LEADS REQ USE 12126039) (AC-DELCO #PT764)	98	F87	1	12126494
	7-N25	14.865	**CONNECTOR**, INLINE-TO INFL RST STRG WHL MDL COIL (2-WAY M) (W/3 LEADS..1 IN CAV A...TWO IN CAB B)	99-02	F	1	12085215
29.		N.S.	**CONNECTOR**, SW-WSW		.....		
30.	7-N5	2.459	**CONNECTOR**, SW--HDLP DIMR (11.935)	93-02	F	1	12110742
31.	7-D12	6.509	**CLAMP**, S/GR CPLG SHLD (*KIT1)	93-97	F	1	10195577
	7-D12	6.509	**CLAMP**, S/GR CPLG SHLD (*KIT1)	98-99	F (L36)	1	10195577
		N.S.	**CLAMP**, S/GR CPLG SHLD (*KIT1)	00-02	.....		
32.	7-D23	6.758	**INSULATOR**, STRG COL JKT (4 1/4"X7 1/2") (TRIM AS REQ'D) (15.492)	93-95	F (L32)	1	11515174
	7-D23	6.758	**INSULATOR**, STRG COL JKT (4 1/4"X7 1/2") (TRIM AS REQ'D) (15.492)	95-97	F (L36)	1	11515174
	7-D23	6.758	**INSULATOR**, STRG COL JKT (4 1/4"X7 1/2") (TRIM AS REQ'D) (15.492)	98-02	F	1	11515174
33.	7-D23	6.760	**SHIM**, STRG COL UPR SUPT	93-02	F	1	10250273
34.		8.950	**STRAP**, PLASTIC ADJ TIE (215MM LGTH) (FWD LP WRG HARN)	93-02	F	1	11501906

SERVICE KITS

1.	7-D10	6.242	**BOOT KIT**, S/GR (INCLS 13, 31) (INCLS BOOT, CLAMPS, GREASE)	93-02	F	2	21011025
	7-D10	6.242	**BOOT KIT**, S/GR (INCLS 13, 31) (AC-DELCO #45A7055)	93-97	F0 (LT1) (WITH FIRM RIDE AND HANDLING SUSPENSION)	1	88910854
	7-D10	6.242	**BOOT KIT**, S/GR (INCLS 13, 31) (AC-DELCO #45A7055)	93-95	F0 (L32) (WITH FIRM RIDE AND HANDLING SUSPENSION)	1	88910854
	7-D10	6.242	**BOOT KIT**, S/GR (INCLS 13, 31) (AC-DELCO #45A7055)	93-97	FP (LT1) (WITH FIRM RIDE AND HANDLING SUSPENSION)	1	88910854
	7-D10	6.242	**BOOT KIT**, S/GR (INCLS 13, 31) (AC-DELCO #45A7055)	93-95	FP (L32) (WITH FIRM RIDE AND HANDLING SUSPENSION)	1	88910854
	7-D10	6.242	**BOOT KIT**, S/GR (INCLS 13, 31) (AC-DELCO #45A7055)	95-99	F0 (L36) (WITH FIRM RIDE AND HANDLING SUSPENSION)	1	88910854
	7-D10	6.242	**BOOT KIT**, S/GR (INCLS 13, 31) (AC-DELCO #45A7055)	95-99	FP (L36) (WITH FIRM RIDE AND HANDLING SUSPENSION)	1	88910854

cardiagn.com

7-D10	6.242	BOOT KIT, S/GR (INCLS 13, 31) (AC-DELCO #45A7055)	98-99	F0 (LS1) (WITH FIRM RIDE AND HANDLING SUSPENSION)	1	88910654
7-D10	6.242	BOOT KIT, S/GR (INCLS 13, 31) (AC-DELCO #45A7055)	98-99	FP (LS1) (WITH FIRM RIDE AND HANDLING SUSPENSION)	1	88910654

RPO DEFINITIONS

K34 – CRUISE CONTROL,AUTOMATIC,ELECTRONIC
LS1 – ENGINE GAS, 8 CYL, 5.7L, SFI, ALUMINUM ENGINE
LT1 – ENGINE-GAS, 8 CYL, 5.7L(5.7P),MFI,HO
L32 – ENGINE,3.4L,V6,(3.4S),SFI,OHV
L36 – ENGINE GAS, 6 CYL, 3.8K, MFI, V6, HO (ERV6 SERIES)
MD8 – TRANSMISSION,AUTOMATIC 4-SPEED(THM700R4/4L60)
MM6 – TRANSMISSION MAN 6 SPD, BORG WARNER, 85MM, 1ST 2.66, 6TH 0.50, O/D
M28 – TRANSMISSION MAN, 6 SPD, BORG WARNER, 85MM, 3.36 1ST, 1.35 3RD
M29 – TRANSMISSION MAN, 6 SPD, BORG WARNER, 85MM, 2.97 1ST, 1.44 3RD
M30 – TRANSMISSION,AUTOMATIC 4 SPEED,4L60E,ELECTRONIC
M49 – TRANSMISSION MAN 5 SPD, BORG WARNER, 77MM, 3.75 1ST, .76 5TH, O/D
NP7 – STEERING COLUMN(EXPORT)
T2J – ORNAMENTATION,INTERIOR,EXPORT UNIQUE REQUIREMENTS(EXPORT)
UK2 – LEVER,DIRECTIONAL SIGNAL(EXPORT)
UK3 – ELECTRONIC SYSTEM,ACCESSORY CONTROL.

cardiagn.com

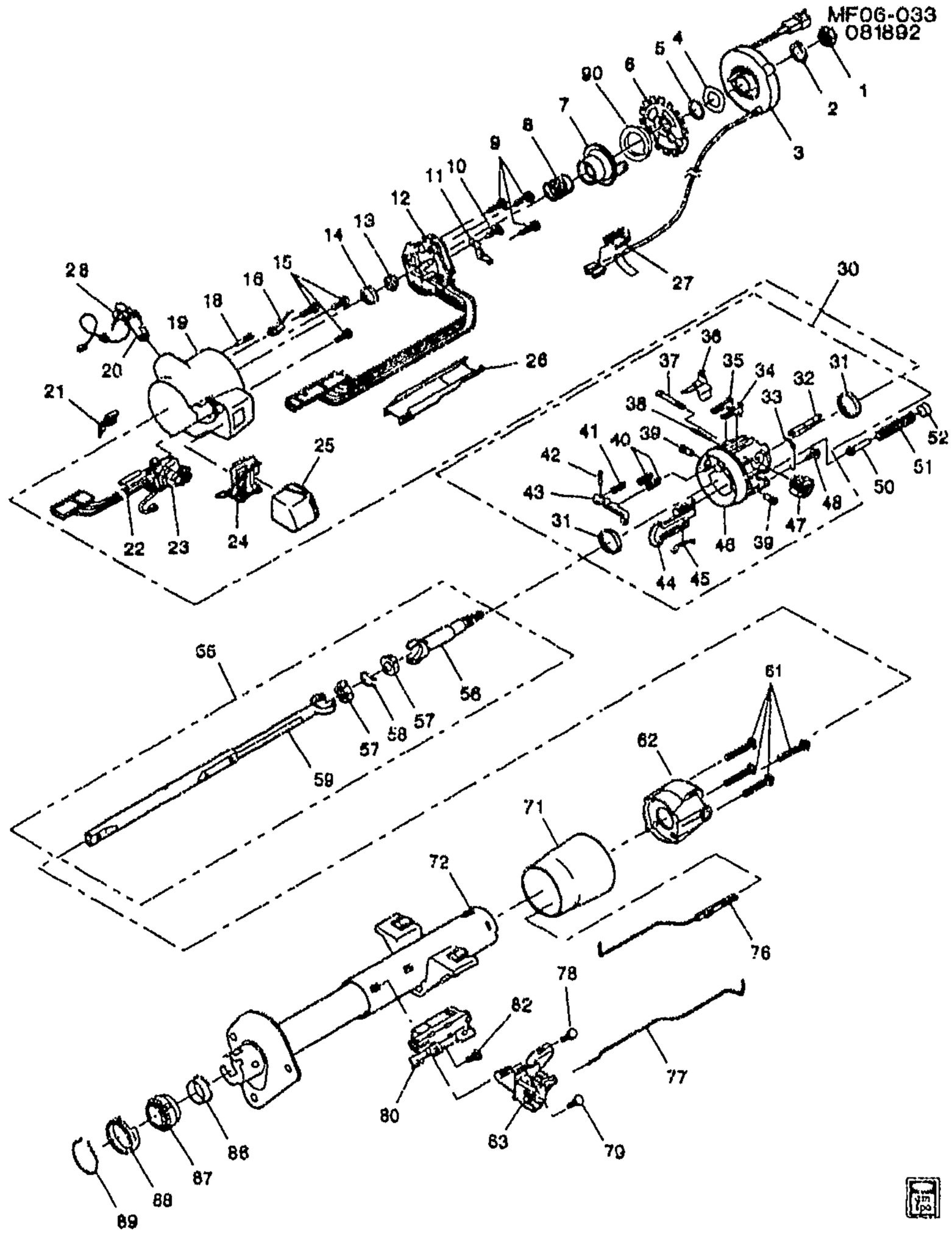

MF06–033

1993–1996 F STEERING COLUMN

1.	7–D13	6.515	NUT, STRG WHL (M14X1.5) (HFH TORQ PREV)	93–96	F	1	26056108
2.		8.934	RING, SNAP (STL PL .750 DIA) (INFL RST STRG WHL MDL COIL RED (*KITS)	93–96	.....	1	274414

cardiagn.com

3.	7-N25	14.865	COIL KIT, INFL RST STRG WHL MDL	93-96	F	1	26041005
	7-N25	14.865	COIL KIT, INFL RST STRG WHL MDL	93	F (MD8, T2J) (EXPORT)	1	26050811
4.	7-N25	14.865	WASHER, STRG WHL INFL RST MDL COIL	93-96	F	1	26011609
5.	7-D11	6.500	RING, STRG SHF LK PLT RET (6 524)	93-96	F	AR	5694191
6.	7-D11	6.500	PLATE, STRG SHF LK	93-96	F	1	26017656
7.	7-N14	2.896	CAM, T/SIG CANC (AC-DELCO #26047013)	93-96	F	1	26047013
8.		N.S.	SPRING, STRG SHF UPR BRG (*KIT5)				
9.	7-N13	2.895	BOLT, T/SIG SW (9-18X17.52) (PAN HD C/R HILO TAP)	93-96	F	3	7809128
10.		8.977	SCREW, M4.2X1.41 X 20 RD WA HD TAP PC (T/SIG SW ACTR)	93-96		AR	11502634
11.	7-N13	2.895	ACTUATOR, T/SIG SW (ARM)	93-96	F	1	7827038
12.	7-N13	2.895	SWITCH, T/SIG (CPS) (AC-DELCO #D6210A)	93	F (EXC T2J)	1	1995963
	7-N13	2.895	SWITCH, T/SIG (CPS) (AC-DELCO #D6210A)	94-96	F	1	1995963
	7-N14	2.896	SPRING, T/SIG SW CANC CAM (AC-DELCO #1964784)	93-96	F	RH	1964784
	7-N14	2.896	SPRING, T/SIG SW CANC CAM (AC-DELCO #1964785)	93-96	F	LH	1964785
	7-N14	2.896	SPRING, T/SIG SW LVR	93-96	F	1	10499953
	7-N13	2.895	SWITCH, T/SIG (CPS) (AC-DELCO #D6203A)	93-96	F (T2J) (EXPORT)	1	1995962
13.		N.S.	SEAT, STRG SHF UPR BRG RACE (*KIT2)				
14.		N.S.	RACE, STRG COL INR (*KIT2)				
15.	7-D14	6.518	BOLT, STRG COL HSG (GOLD) (1/4-20X3/4) (PAN HD C/R TAP) (2.895)	93-96	F	3	7830670
16.	7-N3	2.195	SWITCH, IGN KEY ALARM (AC-DELCO #D1458C)	93-96	F	1	26022717
18.	7-N3	2.195	BOLT, STRG COL LK & IGN SW CYL (THD SECT AT TOP OF SCREW)	93-96	F	1	7841678
19.	7-D14	6.518	COVER, STRG COL HSG (6.500)	93-96	F	1	26012372
	7-D14	6.518	COVER, STRG COL HSG	93	F (MD8, T2J) (EXPORT)	1	26038448
20.	7-N2	2.188	CYLINDER, STRG COL LK & IGN SW (AC-DELCO #D1453C)	93	F (M28, M29, M49)	1	26033387
	7-N2	2.188	CYLINDER, STRG COL LK & IGN SW (AC-DELCO #D1456C)	93	F (MD8) (EXC T2J)	1	26033390
	7-N2	2.188	CYLINDER, STRG COL LK & IGN SW (AC-DELCO #D1453C)	94-96	F (MM6, M49)	1	26033387
	7-N2	2.188	CYLINDER, STRG COL LK & IGN SW (AC-DELCO #D1456C)	94-96	F (M30)	1	26033390
	7-N2	2.188	CYLINDER, STRG COL LK & IGN SW	93	F (MD8, T2J) (EXPORT)	1	26030242
21.	7-N5	2.459	ACTUATOR, HDLP D/SW (AC-DELCO #D844)	93-96	F	1	7827028
22.	7-N5	2.459	PIN, T/SIG LVR PIV (AC-DELCO #7829787)	93-96	F	1	7829787

cardiagn.com

23.	7-N25	10.163	**SWITCH**, WSW & WSWA (CPS) (W/CRCONT CONN FROM LVR) (AC-DELCO #D6312D)	93-96	F	1	26020950
	7-N5	2.459	**SPRING**, T/SIG LVR PIV PIN	93-96	F	1	7828351
	7-N25	10.163	**SWITCH**, WSW & WSWA (CPS) (AC-DELCO #D6313D)	93	F (T2J) (EXPORT)	1	26022920
24.	7-D13	6.514	**PLATE**, COL HSG CVR END BASE	94-96	F	1	26005749
	7-D13	6.514	**PLATE**, COL HSG CVR END BASE	93	F (MD8, T2J) (EXPORT)	1	26021767
25.	7-D14	6.518	**CAP**, STRG COL HSG	93-96	F	1	26005750
	7-D14	6.518	**CAP**, STRG COL HSG	93	F (MD8, T2J) (EXPORT)	1	26035293
26.	7-D16	6.522	**PROTECTOR**, STRG COL WRG (LWR WIRING HARNESS SHIELD)	93-96	F	1	26022488
27.		N.S.	**SHROUD**, STRG COL CONN				
28.	7-M28	2.187	**KEY**, IGN LK (SQUARE HD W/O RES PELLET) (GRV C)	93-96	F	1	26007687
	7-M28	2.187	**KEY**, IGN LK (RESISTOR CODE #2)	93-96	F	1	26019392
	7-M28	2.187	**KEY**, IGN LK (RESISTOR CODE #3)	93-96	F	1	26019393
	7-M28	2.187	**KEY**, IGN LK (RESISTOR CODE #4)	93-96	F	1	26019394
	7-M28	2.187	**KEY**, IGN LK (RESISTOR CODE #5)	93-96	F	1	26019395
	7-M28	2.187	**KEY**, IGN LK (RESISTOR CODE #6)	93-96	F	1	26019396
	7-M28	2.187	**KEY**, IGN LK (RESISTOR CODE #7)	93-96	F	1	26019397
	7-M28	2.187	**KEY**, IGN LK (RESISTOR CODE #8)	93-96	F	1	26019398
	7-M28	2.187	**KEY**, IGN LK (RESISTOR CODE #9)	93-96	F	1	26019399
	7-M28	2.187	**KEY**, IGN LK (RESISTOR CODE #10)	93-96	F	1	26019400
	7-M28	2.187	**KEY**, IGN LK (RESISTOR CODE #11)	93-96	F	1	26019401
	7-M28	2.187	**KEY**, IGN LK (RESISTOR CODE #12)	93-96	F	1	26019402
	7-M28	2.187	**KEY**, IGN LK (RESISTOR CODE #13)	93-96	F	1	26019403
	7-M28	2.187	**KEY**, IGN LK (RESISTOR CODE #14)	93-96	F	1	26019404
	7-M28	2.187	**KEY**, IGN LK (RESISTOR CODE #15)	93-96	F	1	26019405
30.	7-D14	6.518	**HOUSING**, STRG COL (COMPLETE) (INCLS 31 THRU 38, 40 THRU 48) (CPS) (INCL UPR BRG)	93-96	F	1	26017468
	7-D14	6.518	**HOUSING**, STRG COL (COMPLETE) (INCLS 31 THRU 38, 40 THRU 48) (CPS)	93	F (MD8, T2J) (EXPORT)	1	26027137
31.		N.S.	**BEARING**, STRG SHF UPR (PART OF 30) (*KIT3)				
32.	7-D11	6.500	**PIN**, STRG WHL LK (PART OF 30) (TAPERED END)	94-96	F	1	7808613

cardiagn.com

	7-D11	6.500	PIN, STRG WHL LK (PART OF 30) (BLUNT END)	93-96	F (M49, T2J) (EXPORT)	1	7830477
33.		N.S.	SPRING, LK BOLT (PART OF 30) (*KIT3)				
34.	7-D13	6.514	SHOE, STRG COL TILT LK (PART OF 30) (W/O NOTCH)	93-96	F	1	26017469
	7-D13	6.514	SHOE, STRG COL TILT LK (PART OF 30) (W/NOTCH)	93-96	F	1	26017470
35.	7-D13	6.514	SHOE, STRG COL TILT LK (PART OF 30) (W/O NOTCH)	93-96	F	1	26017469
	7-D13	6.514	SHOE, STRG COL TILT LK (PART OF 30) (W/NOTCH)	93-96	F	1	26017470
36.	7-D16	6.522	PROTECTOR, STRG COL WRG (LWR WIRING HARNESS SHIELD) (PART OF 30)	93-96	F	1	26022488
37.	7-N3	2.195	SHAFT, IGN & START SW ACTR (PART OF 30)	93-96	F	1	7837466
38.	7-D13	6.514	PIN, STRG COL TILT LK SHOE (PART OF 30)	93-96	F	1	7806567
39.		N.S.	PIN, STRG COL PIV (*KIT2)				
40.	7-D13	6.514	SPRING, STRG COL TILT LK SHOE (PART OF 30)	93-96	F	2	7804912
41.	7-D13	6.514	SPRING, STRG COL TILT LK REL LVR (PART OF 30)	93-96	F	1	5698410
42.		8.939	PIN, 3/16X3/4, SPR COILED, PL (PART OF 30ILT LK REL LVR PIV) (AC-DELCO #9422127)	93-96		1	9422127
43.	7-D13	6.514	LEVER, STRG COL TILT LK REL (PART OF 30) (SHOE REL)	93-96	F	1	7827689
44.	7-N3	2.195	RACK, IGN & START SW (PART OF 30) (USED W/TILT COL) (*KIT3)	93-96	F	1	7827157
45.	7-N3	2.195	SPRING, IGN & START SW RACK (PART OF 30)	93-96	F	1	7804908
46.		N.S.	HOUSING, STRG COL (PART OF 30)				
47.		N.S.	SECTOR KIT, IGN SW ACTR (PART OF 30) (*KIT3)				
48.		N.S.	BOLT, IGN SW (PART OF 30) (*KIT3)				
50.		N.S.	GUIDE, STRG COL SPR (*KIT2)				
51.		N.S.	SPRING, STRG COL TILT (*KIT2)				
52.		N.S.	RETAINER, STRG COL SPR				
55.	7-D16	6.524	SHAFT, STRG (INCL 56, 57, 58, 59) (CPS)	93-96	F	1	26019936
56.	7-D16	6.524	SHAFT, UPR STRG (PART OF 55)	93-96	F	1	26017653
	7-D16	6.524	SHAFT, UPR STRG (PART OF 55)	93-96	F	1	26072258
57.		N.S.	SPHERE, CENTERING (PART OF 55) (*KIT4)				
58.		N.S.	SPRING, JT PRELOAD (PART OF 55) (*KIT4)				
59.	7-D16	6.524	SHAFT, LWR STRG (PART OF 55)	93-96	F	1	26019937
61.	7-D13	6.514	BOLT, STRG COL HSG SUPT (10-32X1.25) (HFH)	93-96	F	4	7806867
62.	7-D14	6.518	SUPPORT, STRG COL HSG	93-96	F	1	26016589
71.	7-D14	6.518	SHROUD, STRG COL HSG	93-96	F	1	26010647
	7-D14	6.518	SHROUD, STRG COL HSG	93	F (MD8, M49, T2J) (EXPORT)	1	26026364

cardiagn.com

72.	7-D14	6.518	JACKET, STRG COL	93-96	F	1	26021250
76.	7-N3	2.195	ACTUATOR, IGN & START SW	93-96	F	1	26010649
77.	7-N5	2.459	ROD, HDLP D/SW ACTR	93-96	F	1	26010648
78.	7-N2	2.188	BOLT, IGN SW (10-24X1/4) (RD WSHR HD C/R)	93-96	F	2	7806433
79.		8.977	SCREW, PAN HD C/R W/EXT LK WA M4.8X1.59X10 ZOR TAP (STRG SHF LWR BRG) (8.913)	93-96		1	11505323
80.	7-N2	2.188	SWITCH, IGN & START (AC-DELCO #D1405B)	93	F (M28, M29, M49)	1	1990116
	7-N2	2.188	SWITCH, IGN & START (AC-DELCO #D1473C)	93	F (MD8)	1	26036235
	7-N2	2.188	SWITCH, IGN & START (AC-DELCO #D1405B)	94-96	F (M49, MM6)	1	1990116
	7-N2	2.188	SWITCH, IGN & START (AC-DELCO #D1473C)	94-96	F (M30)	1	26036235
82.		8.909	SCREW (10-24X3/8) (IGN SW) (M/TRANS)	93-96		AR	9428418
	7-N2	2.188	BOLT, IGN & START SW (4-24 X 1/4) (PAN HD C/R HILO TAP) (AC-DELCO #7844218)	94-96	F (M30)	2	7844218
	7-N2	2.188	BOLT, IGN & START SW (4-24 X 1/4) (PAN HD C/R HILO TAP) (AC-DELCO #7844218)	93	F (MD8, T2J) (EXPORT)	2	7844218
83.	7-N5	2.459	SWITCH, HDLP DIMR (AC-DELCO #D805A)	93-96	F	1	26035242
86.	7-D16	6.521	ADAPTER, STRG SHF LWR BRG	93-96	F	1	7805822
87.	7-D16	6.521	BEARING, STRG SHF LWR	93-96	F	1	7805700
88.	7-D16	6.521	RETAINER, STRG SHF LWR BRG ADAP	93-96	F	1	7804440
89.	7-D16	6.521	RING, STRG SHF LWR BRG ADAP RET	93-96	F	1	7804439
90.	7-D11	6.500	INSULATOR, STRG SHF LK PLT (*KIT5)	93-96	F	1	26027958

SERVICE KITS

1.	7-D14	6.518	LUBRICANT, T/SIG SW CANC CAM	93-96	F	1	26001884
2.	7-D13	6.514	SPRING KIT, STRG COL TILT (INCL 13, 14, 39, 50, 51, 52)	93-96	F	1	26059718
3.	7-N3	2.195	RACK KIT, IGN SW (INCL 14, 31, 33, 44, 47, 48) (W/SECTOR)	93-96	F	1	7844651
4.	7-D17	6.525	SPHERE KIT, STRG SHF (INCL 57, 58) (6.514)	93-96	F	1	7808505
5.	7-D16	6.521	SPRING KIT, STRG SHF UPR BRG (INCL 2, 7, 8, 90) (INCL)	94-96	F	1	26059701

RPO DEFINITIONS

MD8 – TRANSMISSION,AUTOMATIC 4-SPEED(THM700R4/4L60)
MM6 – TRANSMISSION MAN 6 SPD, BORG WARNER, 85MM, 1ST 2.66, 6TH 0.50, O/D
M28 – TRANSMISSION MAN, 6 SPD, BORG WARNER, 85MM, 3.36 1ST, 1 35 3RD
M29 – TRANSMISSION MAN, 6 SPD, BORG WARNER, 85MM, 2.97 1ST, 1.44 3RD
M30 – TRANSMISSION,AUTOMATIC 4 SPEED,4L60E,ELECTRONIC
M49 – TRANSMISSION MAN 5 SPD, BORG WARNER, 77MM, 3.75 1ST, .76 5TH, O/D
T2J – ORNAMENTATION INTERIOR EXPORT UNIQUE REQUIREMENTS(EXPORT)

cardiagn.com

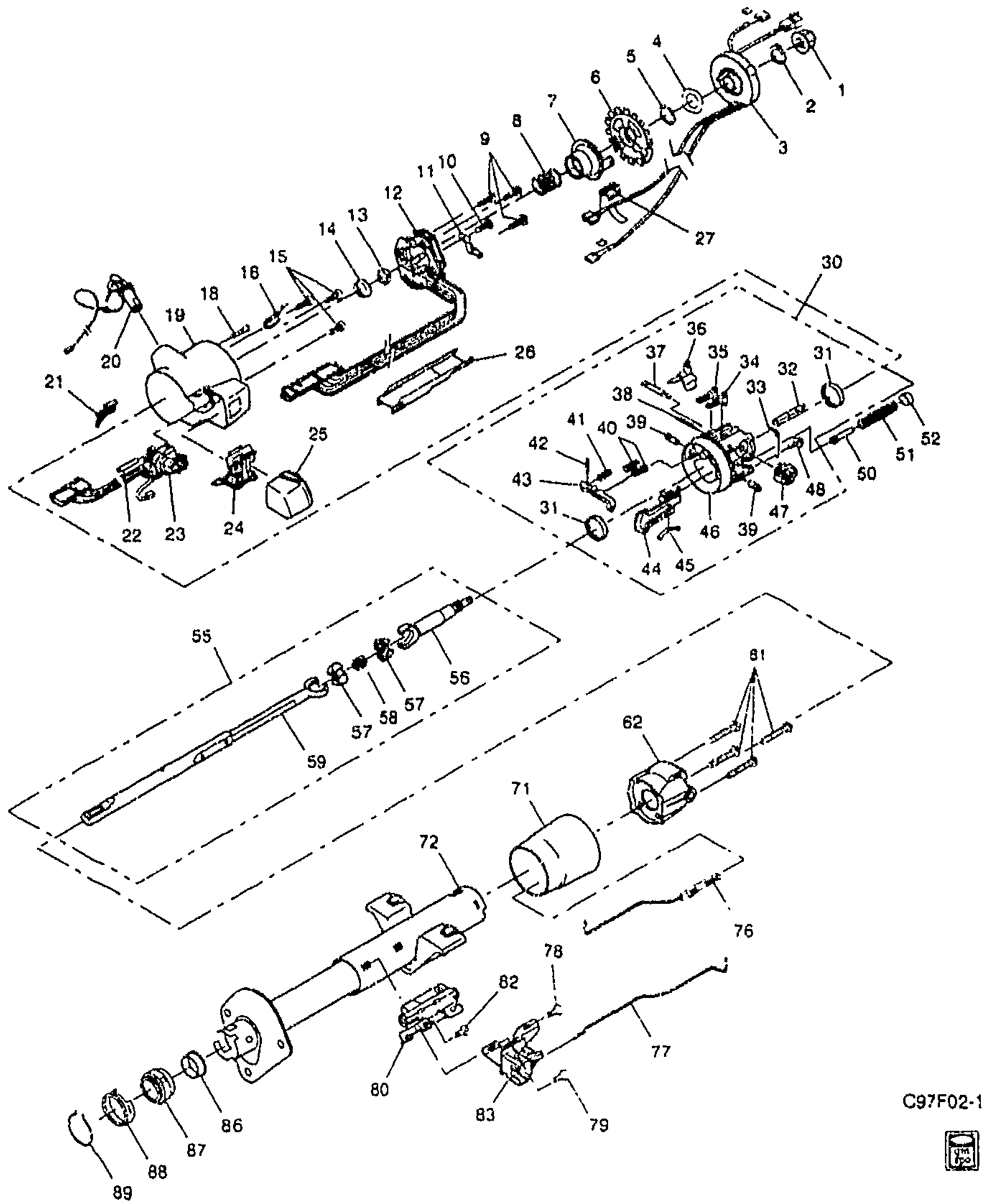

MF06-038

1997-2002 F STEERING COLUMN/TILT (SIR,PASS KEY,FLOOR SHIFT

1.	7-D13	6.515	NUT, STRG WHL (M14X1.5) (HFH TORQ PREV)	97-02 F	1	26056108
2.		8.934	RING, SNAP (STL PL .750 DIA) (INFL RST STRG WHL MDL. COIL RET) (*KIT5)	97-02	1	274414

cardiagn.com

3.	7-N25	14.865	COIL KIT, INFL RST STRG WHL MDL	97-98	F	1	26041005
	7-N25	14.865	COIL KIT, INFL RST STRG WHL MDL	99	F	1	26072752
	7-N25	14.865	COIL KIT, INFL RST STRG WHL MDL	00-02	F (EXC UK3)	1	26072752
	7-N25	14.865	COIL KIT, INFL RST STRG WHL MDL	00-02	F (UK3)	1	26072753
4.	7-N25	14.865	WASHER, STRG WHL INFL RST MDL COIL	97-02	F	1	26011609
5.	7-D11	6.500	RING, STRG SHF LK PLT RET (6.524)	97-02	F	AR	5694191
6.	7-D11	6.500	PLATE, STRG SHF LK	97	F	1	26017656
	7-D11	6.500	PLATE, STRG SHF LK	98-02	F (EXC NP7)	1	26017656
	7-D11	6.500	PLATE, STRG SHF LK	98	F (NP7) (EXPORT)	1	26036544
	7-D11	6.500	PLATE, STRG SHF LK	99-02	F (NP7) (EXPORT)	1	26071184
7.		N.S.	CAM, T/SIG CANC (*KIT1, KIT5)				
8.		N.S.	SPRING, STRG SHF UPR BRG (*KIT5)				
9.	7-N13	2.895	BOLT, T/SIG SW (9-18X17.52) (PAN HD C/R HILO TAP)	97-02	F	3	7809128
10.		8.977	SCREW, M4.2X1.41 X 20 RD WA HD TAP PC (T/SIG SW ACTR)	97-02		AR	11502634
11.	7-N13	2.895	ACTUATOR, T/SIG SW (ARM)	97-02	F	1	7827038
12.	7-N13	2.895	SWITCH, T/SIG (CPS) (AC-DELCO #D6210A)	97	F	1	1995963
	7-N13	2.895	SWITCH, T/SIG (CPS) (AC-DELCO #D6210A)	98-01	F (EXC NP7)	1	1995963
	7-N14	2.898	SPRING, T/SIG SW CANC CAM (AC-DELCO #1964784)	97-02	F	RH	1964784
	7-N14	2.896	SPRING, T/SIG SW CANC CAM (AC-DELCO #1964785)	97-02	F	LH	1964785
	7-N14	2.896	SPRING, T/SIG SW LVR	97-02	F	1	10499953
	7-N13	2.895	SWITCH, T/SIG (CPS) (AC-DELCO #D6203A)	97	F (T2J) (EXPORT)	1	1995962
	7-N13	2.895	SWITCH, T/SIG (CPS) (AC-DELCO #D6203A)	98-01	F (NP7) (EXPORT)	1	1995962
13.		N.S.	SEAT, STRG SHF UPR BRG RACE (*KIT2)				
14.		N.S.	RACE, STRG COL INR (*KIT2)				
15.	7-D14	6.518	BOLT, STRG COL HSG (GOLD) (1/4-20X3/4) (PAN HD C/R TAP) (2.895)	97-02	F	3	7830670
16.	7-N3	2.195	SWITCH, IGN KEY ALARM (AC-DELCO #D1458C)	97-02	F	1	26022717
18.	7-N3	2.195	BOLT, STRG COL LK & IGN SW CYL (THD SECT AT TOP OF SCREW)	97-02	F	1	7841678
19.	7-D14	6.518	COVER, STRG COL HSG (6.500)	97	F	1	26012372
	7-D14	6.518	COVER, STRG COL HSG (6.500)	98-99	F (EXC NP7)	1	26012372
	7-D14	6.518	COVER, STRG COL HSG	00-02	F (EXC NP7)	1	26035681
	7-D14	6.518	COVER, STRG COL HSG	98	F (NP7) (EXPORT)	1	26068795
	7-D14	6.518	COVER, STRG COL HSG	99-02	F (NP7) (EXPORT)	1	26070612
20.	7-N2	2.188	CYLINDER, STRG COL LK & IGN SW (AC-DELCO #D1453C)	97-98	F (MM6, M49)	1	26033387
	7-N2	2.188	CYLINDER, STRG COL LK & IGN SW (AC-DELCO #D1456C)	97-01	F (M30)	1	26033390

cardiagn.com

	7-N2	2.186	**CYLINDER**, STRG COL LK & IGN SW (AC-DELCO #D1453C)	99-02	F (MM6, M49) (EXC NP7)	1	26033307
	7-N2	2.188	**CYLINDER**, STRG COL LK & IGN SW	02	F (M30, NP7)	1	26030242
	7-N2	2.188	**CYLINDER**, STRG COL LK & IGN SW	00-02	F (MM6, M49, NP7) (EXPORT)	1	26030243
21.	7-N5	2.459	**ACTUATOR**, HDLP D/SW (AC-DELCO #D844)	97-02	F	1	7827028
22.	7-N5	2.459	**PIN**, T/SIG LVR PIV (AC-DELCO #7829787)	97-02	F	1	7829787
23.	7-N25	10.163	**SWITCH**, WSW & WSWA (CPS) (W/CRCONT CONN FROM LVR) (AC-DELCO #D6312D)	97-99	F	1	26020950
	7-N25	10.163	**SWITCH**, WSW & WSWA (CPS) (AC-DELCO #D6313D)	00-01	F (EXC NP7)	1	26022920
	7-N5	2.459	**SPRING**, T/SIG LVR PIV PIN	97-01	F	1	7828351
	7-N25	10.163	**SWITCH**, WSW & WSWA (CPS) (W/CRCONT CONN FROM LVR) (AC-DELCO #D6312D)	00-01	F (NP7) (EXPORT)	1	26020950
24.	7-D13	6.514	**PLATE**, COL HSG CVR END BASE	97-99	F	1	26005749
	7-D13	6.514	**PLATE**, COL HSG CVR END BASE	00-02	F (EXC NP7)	1	26021767
	7-D13	6.514	**PLATE**, COL HSG CVR END BASE	00-02	F (NP7) (EXPORT)	1	26005749
25.	7-D14	6.518	**CAP**, STRG COL HSG	97-99	F	1	26005750
	7-D14	6.518	**CAP**, STRG COL HSG	00-02	F (NP7) (EXPORT)	1	26005750
	7-D14	6.518	**CAP**, STRG COL HSG	00-02	F (EXC NP7) (EXPORT)	1	26035293
26.	7-D16	6.522	**PROTECTOR**, STRG COL WRG (LWR WIRING HARNESS SHIELD)	97-02	F	1	26022488
	7-D16	6.522	**PROTECTOR**, STRG COL WRG (UPR STEERING COLUMN HOUSING SHIELD)	98-02	F	1	26009317
27.		N.S.	**CONNECTOR**, STRG COL HSG SHRD		.....		
30.	7-D14	6.518	**HOUSING**, STRG COL (COMPLETE) (INCL 31 THRU 48) (CPS) (INCL UPR BRG)	97	F	1	26017468
	7-D14	6.518	**HOUSING**, STRG COL (COMPLETE) (INCL 31 THRU 48) (CPS) (INCL UPR BRG)	98-02	F (EXC NP7)	1	26017468
	7-D14	6.518	**HOUSING**, STRG COL (COMPLETE) (INCL 31 THRU 48) (CPS)	98-02	F (NP7) (EXPORT) .. .	1	26027137
31.		N.S.	**BEARING**, STRG SHF UPR (PART OF 30) (*KIT3)		.....		
32.	7-D11	6.500	**PIN**, STRG WHL LK (PART OF 30) (TAPERED END)	97-02	F	1	7808613
	7-D11	6.500	**PIN**, STRG WHL LK (PART OF 30) (BLUNT END)	97	F (M49, T2J) (EXPORT)	1	7830477
	7-D11	6.500	**PIN**, STRG WHL LK (PART OF 30) (BLUNT END)	98-01	F (NP7) (EXPORT)	1	7830477
33.		N.S.	**SPRING**, LK BOLT (PART OF 30) (*KIT3)		.....		
34.	7-D13	6.514	**SHOE**, STRG COL TILT LK (PART OF 30) (W/O NOTCH)	97-02	F	1	26017469

cardiagn.com

	7-D13	6.514	SHOE, STRG COL TILT LK (PART OF 30) (W/NOTCH)	97-02	F	1	26017470
35.	7-D13	6.514	SHOE, STRG COL TILT LK (PART OF 30) (W/O NOTCH)	97-02	F	1	26017469
	7-D13	6.514	SHOE, STRG COL TILT LK (PART OF 30) (W/NOTCH)	97-02	F	1	26017470
36.	7-D16	6.522	PROTECTOR, STRG COL WRG (LWR WIRING HARNESS SHIELD) (PART OF 30)	97-02	F	1	26022488
	7-D16	6.522	PROTECTOR, STRG COL WRG (UPR STEERING COLUMN HOUSING SHIELD) (PART OF 30)	98-02	F	1	26009317
37.	7-N3	2.195	SHAFT, IGN & START SW ACTR (PART OF 30)	97-02	F	1	7837466
38.	7-D13	6.514	PIN, STRG COL TILT LK SHOE (PART OF 30)	97-02	F	1	7806567
39.		N.S.	PIN, STRG COL PIV (*KIT2)				
40.	7-D13	6.514	SPRING, STRG COL TILT LK SHOE (PART OF 30)	97-02	F	2	7804912
41.	7-D13	6.514	SPRING, STRG COL TILT LK REL LVR (PART OF 30)	97-02	F	1	5698410
42.		8.939	PIN, 3/16X3/4, SPR COILED, PL (PART OF 30ILT LK REL LVR PIV) (AC-DELCO #9422127)	97-02		1	9422127
43.	7-D13	6.514	LEVER, STRG COL TILT LK REL (PART OF 30) (SHOE REL)	97-02	F	1	7827689
44.	7-N3	2.195	RACK, IGN & START SW (PART OF 30) (USED W/TILT COL) (*KIT3)	97-02	F	1	7827157
45.	7-N3	2.195	SPRING IGN & START SW RACK (PART OF 30)	97-02	F	1	7804908
46.		N.S.	HOUSING, STRG COL (PART OF 30)				
47.		N.S.	SECTOR KIT, IGN SW ACTR (PART OF 30) (*KIT3)				
48.		N.S.	BOLT, IGN SW (PART OF 30) (*KIT3)				
50.		N.S.	GUIDE, STRG COL SPR (*KIT2)				
51.		N.S.	SPRING, STRG COL TILT (*KIT2)				
52.		N.S.	RETAINER, STRG COL SPR				
55.	7-D16	6.524	SHAFT, STRG (INCL 56, 57, 58, 59) (CPS)	97-98	F	1	26019936
	7-D16	6.524	SHAFT, STRG (INCL 56, 57, 58, 59) (CPS)	99-02	F (EXC NP7)	1	26019936
	7-D16	6.524	SHAFT, STRG (INCL 56, 57, 58, 59) (CPS)	99-02	F (NP7) (EXPORT)	1	26070600
56.	7-D16	6.524	SHAFT, UPR STRG (PART OF 55)	97-98	F	1	26017653
	7-D16	6.524	SHAFT, UPR STRG (PART OF 55)	97-98	F	1	26072258
	7-D16	6.524	SHAFT, UPR STRG (PART OF 55)	99-02	F (EXC NP7)	1	26072258
57.		N.S.	SPHERE, CENTERING (PART OF 55) (*KIT4)				
58.		N.S.	SPRING, JT PRELOAD (PART OF 55) (*KIT4)				
59.	7-D16	6.524	SHAFT, LWR STRG (PART OF 55)	97-02	F	1	26019937
61.	7-D13	6.514	BOLT, STRG COL HSG SUPT (10-32X1.25) (HFH)	97-02	F	4	7806867
62.	7-D14	6.518	SUPPORT, STRG COL HSG	97-02	F	1	26016589
71.	7-D14	6.518	SHROUD, STRG COL HSG	97-02	F	1	26010647

cardiagn.com

	7-D14	6.518	SHROUD, STRG COL HSG	00-02	F (EXC NP7)	1	26026364
72.	7-D14	6.518	JACKET, STRG COL	97-02	F	1	26021250
76.	7-N3	2.195	ACTUATOR, IGN & START SW ..	97-02	F	1	26010649
77.	7-N5	2.459	ROD, HDLP D/SW ACTR	97-02	F	1	26010648
78.	7-N2	2.188	BOLT, IGN SW (10-24X1/4) (RD WSHR HD C/R)	97-02	F	2	7805433
79.		8.977	SCREW, PAN HD C/R W/EXT LK WA M4.8X1.59X10 ZOR TAP (STRG SHF LWR BRG) (8.913) ...	97-02	.....	1	11505323
80.	7-N2	2.188	SWITCH, IGN & START (AC-DELCO #D1405B)	97-02	F (M49, MM6)	1	1990116
	7-N2	2.188	SWITCH, IGN & START (AC-DELCO #D1473C)	97-02	F (M30)	1	26036235
82.		8.909	SCREW (10-24X3/8) (IGN SW) (M/TRANS)	97-02	.....	AR	9428418
	7-N2	2.188	BOLT, IGN & START SW (4-24 X 1/4) (PAN HD C/R HILO TAP) (AC-DELCO #7844218)	97-02	F (M30)	2	7844218
83.	7-N5	2.459	SWITCH, HDLP DIMR (AC -DELCO #D805A)	97-02	F	1	26035242
86.	7-D16	6.521	ADAPTER, STRG SHF LWR BRG	97-02	F	1	7805822
87.	7-D16	6.521	BEARING, STRG SHF LWR	97-02	F	1	7805700
88.	7-D16	6.521	RETAINER, STRG SHF LWR BRG ADAP	97-02	F	1	7804440
89.	7-D16	6.521	RING, STRG SHF LWR BRG ADAP RET	97-02	F	1	7804439

SERVICE KITS

1.	7-D14	6.518	LUBRICANT, T/SIG SW CANC CAM	97-02	F	1	26001884
2.	7-D13	6.514	SPRING KIT, STRG COL TILT (INCL 13, 14, 39, 50, 51, 52)	97-02	F	1	26059718
3.	7-N3	2.195	RACK KIT, IGN SW (INCL 14, 31, 33, 44, 47, 48) (W/SECTOR)	97-02	F	1	7844651
4.	7-D17	6.525	SPHERE KIT, STRG SHF (INCLS 57, 58) (6.514)	97-02	F	1	7808505
5.	7-D16	6.521	SPRING KIT, STRG SHF UPR BRG (INCLS 2, 7, 8) (INCL)	97-02	F	1	26059701

RPO DEFINITIONS

MM6 – TRANSMISSION MAN 6 SPD, BORG WARNER, 85MM, 1ST 2.66, 6TH 0.50, O/D
M30 – TRANSMISSION,AUTOMATIC 4 SPEED,4L60E,ELECTRONIC
M49 – TRANSMISSION MAN 5 SPD, BORG WARNER, 77MM, 3.75 1ST, .76 5TH, O/D
NP7 – STEERING COLUMN(EXPORT)
T2J – ORNAMENTATION,INTERIOR,EXPORT UNIQUE REQUIREMENTS(EXPORT)
UK3 – ELECTRONIC SYSTEM,ACCESSORY CONTROL

cardiagn.com

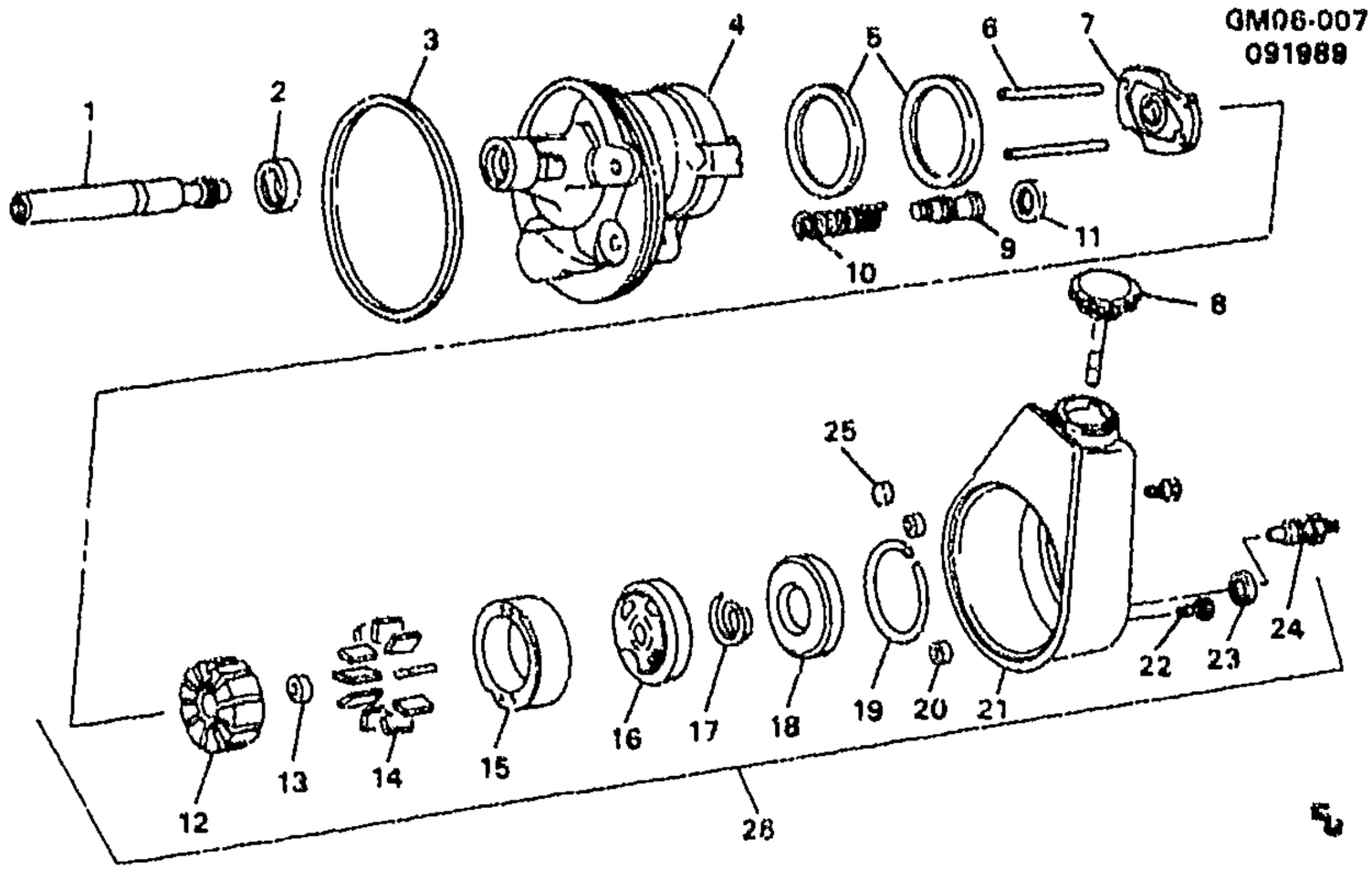

GM06–0074

1993–1995 F STEERING PUMP ASM (L32/3.4S)

1.		N.S.	SHAFT KIT, P/S PUMP (INCLS 13) (PART OF 26)				
	7–D17	6.605	PUMP, P/S (INCLS 13) (PART OF 26)	93–95	F (L32)	1	26019595
	7–D17	6.605	PUMP KIT, P/S (W/FLUID RSVR) (REMAN) (INCLS 13) (PART OF 26) (AC–DELCO #36–6086)	93–95	F (L32)	1	26085232
2.	7–D20	6.617	SEAL, P/S PUMP SHF (PART OF 26) (*KIT1)	93–95	F (L32)	1	26043126
3.		N.S.	SEAL, PUMP TO HSG (113.3MM) (PART OF 21, 26) (*KIT1)				
4.	7–D19	6.608	HOUSING, P/S PUMP (PART OF 26)	93–95	F (L32)	1	26021385
5.		N.S.	SEAL, HYD PUMP (PART OF 26) (*KIT1)				
6.	7–D19	6.608	PIN, P/S PUMP RING (PART OF 26)	93–95	F (L32)	2	5689357
7.	7–D19	6.612	PLATE, P/S PUMP THR (PART OF 26)	93–95	F (L32)	1	7836369
8.	7–D20	6.635	CAP, P/S PUMP RSVR (PART OF 26) (AC–DELCO #36–7138)	93–95	F (L32)	1	7834183
9.	7–D20	6.624	VALVE, P/S PUMP FLOW CONT (PART OF 26)	93–95	F (L32)	1	7809230
10.	7–D20	6.624	SPRING, P/S PUMP FLOW C/VLV (PART OF 26) (6.612)	93	F	1	5688037
	7–D20	6.624	SPRING, P/S PUMP FLOW C/VLV (PART OF 26) (6.612)	94–95	F (L32)	1	5688037
11.		N.S.	SEAL, FTG (PART OF 26) (*KIT1)				
12.		N.S.	ROTOR, PUMP (PART OF 26) (*KIT2)				

cardiagn.com

13.		N.S.	RING, SHAFT RETAINING (PART OF 1, 26 (*KIT2)				
14.		N.S.	VANE, P/S PUMP (PART OF 26) (*KIT2)				
15.		N.S.	RING, PUMP (PART OF 26) (*KIT2)				
16.	7-D19	6.612	PLATE, P/S PUMP PRESS (PART OF 26)	93-95	F (L32)	1	7839669
17.	7-D19	6.612	SPRING, P/S PUMP PRESS PLT (PART OF 26)	93-95	F (L32)	1	7839667
18.	7-D19	6.609	PLATE, P/S PUMP END (PART OF 26)	93-95	F (L32)	1	5689358
19.	7-D19	6.609	RING, P/S PUMP END PLT RET (PART OF 26)	93-95	F (L32)	1	5688014
20.		N.S.	SEAL, BOLT-INSIDE RESVR (PART OF 21, 26) (*KIT1)				
21.	7-D20	6.635	RESERVOIR KIT, P/S FLUID (INCLS 3, 20, 23, 25) (PART OF 26)	93-95	F (L32)	1	26045198
22.	7-D18	6.606	STUD, P/S PUMP (PART OF 26) (M10X1.5)	93-95	F (L32)	1	7831388
	7-D18	6.606	STUD, P/S PUMP (PART OF 26) (M10X1.5, 45MM) (W/SHLDR)	93-95	F (L32)	1	7831389
23.	7-D22	6.674	SEAL, P/S PUMP FTG (O RING) (PART OF 21, 24, 26) (14.5 I.D.) (*KIT1) (6.635)	93-95	F (L32)	1	26020642
24.	7-D20	6.624	FITTING, P/S PUMP (INCLS 23) (PART OF 26)	93-95	F (L32)	1	26023850
25.	7-D19	6.608	MAGNET, P/S FLUID RSVR (PART OF 21, 26) (*KIT1)	93-95	F	1	5692682
26.	7-D17	6.605	PUMP, P/S (INCLS 1-25)	93-95	F (L32)	1	26019595

SERVICE KITS

1.	7-D19	6.609	SEAL KIT, P/S PUMP (INCLS 2, 3, 5, 11, 20, 23, 25)	93-95	F (L32)	1	26046717
2.	7-D19	6.610	RING KIT, P/S PUMP (INCLS 12, 13, 14, 15)	93-95	F (L32)	1	26023393

RPO DEFINITIONS
L32 - ENGINE,3.4L,V6,(3.4S),SFI,OHV

cardiagn.com

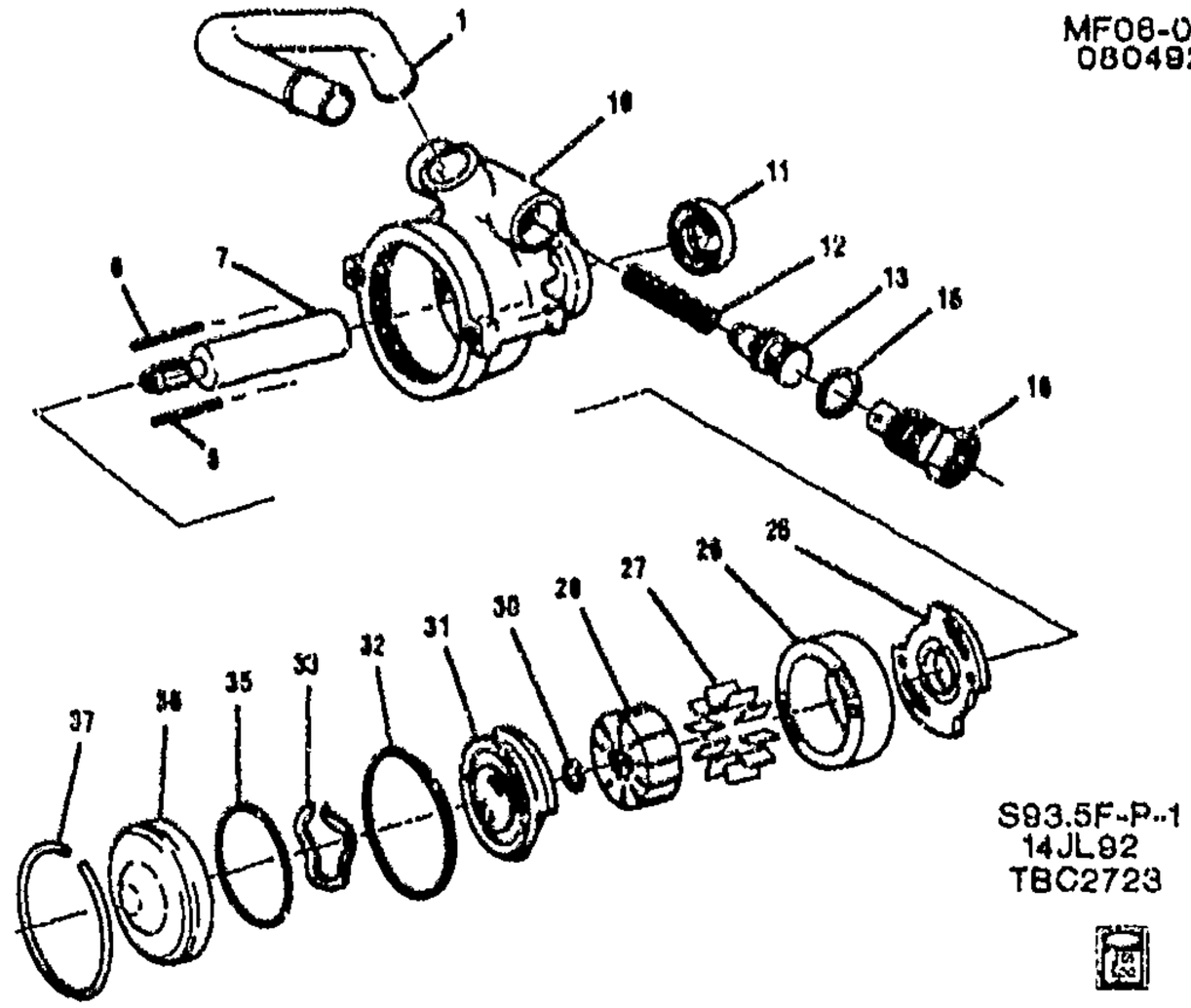

MF06-020

1993-1997 F STEERING PUMP ASM (LT1/5.7P)

NOTE: THIS PUMP IS A COMPACK BUSHING WITH REVERSE ROTATION.

1.		N.S.	TUBE, RETURN (PART OF 10) (*KIT1)				
6.		N.S.	PIN, P/S PUMP RING (*KIT1)				
7.	7-D20	6.614	SHAFT KIT, P/S PUMP (INCLS 30) (W/RET RING) (*KIT1)	93-97	F (LT1)	1	26028226
10.		N.S.	HOUSING, HYD PUMP (INCL 1) (*KIT1)				
11.	7-D20	6.617	SEAL, P/S PUMP SHF (*KIT1, KIT3)	93-97	F (LT1)	1	26026973
12.		N.S.	SPRING, P/S PUMP FLOW C/VLV (*KIT1)				
13.	7-D20	6.624	VALVE, P/S PUMP FLOW CONT (*KIT1)	93-97	F (LT1)	1	26041004
15.	7-D22	6.674	SEAL, P/S PUMP FTG (O RING) (14.5 I.D.) (*KIT1, KIT3) (6.635)	93-97	F (LT1)	1	26020642
16.	7-D20	6.624	FITTING, P/S PUMP (*KIT1)	93-97	F (LT1)	1	26056503
25.		N.S.	PLATE, HYD PUMP THR (*KIT1)				
26.		N.S.	RING, PUMP (*KIT1, KIT2)				
27.		N.S.	VANE, PUMP ROTOR (*KIT1, KIT2)				
28.		N.S.	ROTOR, PUMP (*KIT1, KIT2)				
30.		N.S.	RING, SHAFT RETAINING (PART OF 7) (*KIT1, KIT2)				
31.		N.S.	PLATE, HYD PUMP PRESS (*KIT1)				
32.		N.S.	SEAL, O RING (63.2 I.D.) (*KIT1, KIT3)				
33.		N.S.	SPRING, P/S PUMP PRESS PLT (*KIT1)				

cardiagn.com

35.		N.S.	SEAL, O RING (55.5 I.D.) (*KIT1, KIT3)		.....		
36.		N.S.	PLATE, P/S PUMP END (*KIT1) ..		.....		
37.		N.S.	RING, P/S PUMP SHF BRG RET (*KIT1)		.....		

SERVICE KITS

1.	7-D17	6.605	PUMP, P/S (INCLS 1-37)	93-97	F (LT1)	1	26040664
2.	7-D19	6.610	RING KIT, P/S PUMP (INCLS 26-30) (W/ROTOR & VANE)	93-97	F (LT1)	1	26046606
3.	7-D19	6.609	SEAL KIT, P/S PUMP (INCLS 11, 15, 32, 35)	93-97	F (LT1)	1	26028225

RPO DEFINITIONS

LT1 – ENGINE-GAS, 8 CYL, 5.7L(5.7P),MFI,HO

cardiagn.com

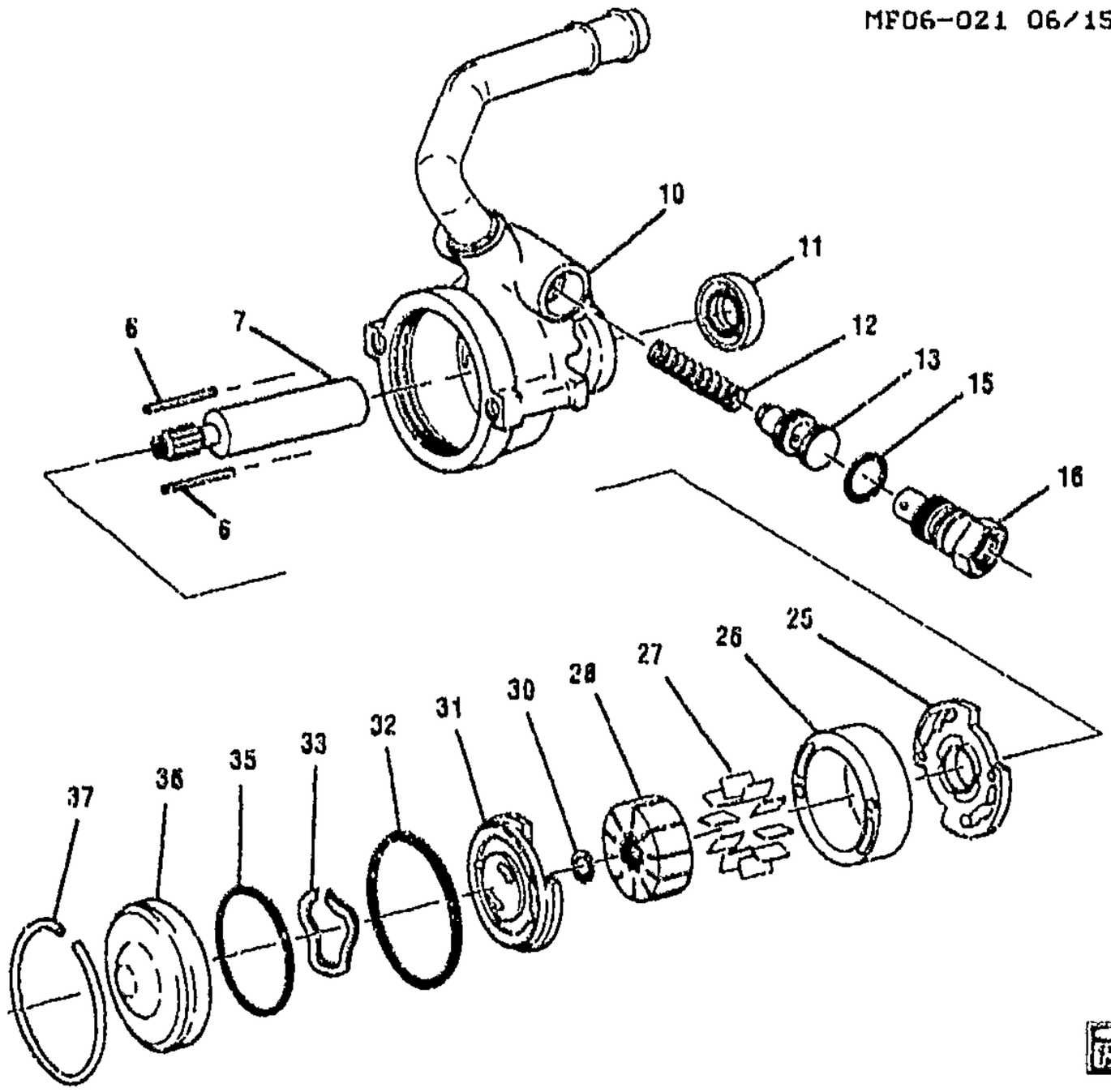

MF06-021

1995-2002 F STEERING PUMP ASM (L36/3.8K)

6.	7-D19	6.608	PIN, P/S PUMP RING (*KIT1)	95-02	F (L36)	2	26002615
7.		N.S.	SHAFT, DRIVE (*KIT1, KIT4)				
10.		N.S.	HOUSING, HYD PUMP (*KIT1)				
11.	7-D20	6.617	SEAL, P/S PUMP SHF (*KIT1, KIT3)	95-02	F (L36)	1	26043126
12.	7-D20	6.624	SPRING, P/S PUMP FLOW C/VLV (*KIT1) (6.612)	95-02	F (L36)	1	5688037
13.	7-D20	6.624	VALVE, P/S PUMP FLOW CONT (*KIT1)	95-02	F (L36)	1	26041004
15.	7-D22	6.674	SEAL, P/S PUMP FTG (O RING) (.588-.578" ID) (*KIT1, KIT3)	95-98	F (L36)	1	5688035
	7-D22	6.674	SEAL, P/S PUMP FTG (O RING) (14.5 I.D.) (*KIT1, KIT3) (6.635)	95-02	F (L36)	1	26020842
16.	7-D20	6.624	FITTING, P/S PUMP (*KIT1)	95-02	F (L36)	1	26056501
25.	7-D19	6.612	PLATE, P/S PUMP THR (*KIT1)	95-02	F (L36)	1	26025457
26.		N.S.	RING, PUMP (*KIT1, KIT2)				
27.		N.S.	VANE, PUMP (*KIT1, KIT2)				
28.		N.S.	ROTOR, PUMP (*KIT1, KIT2)				
30.		N.S.	RING, SHAFT RETAINING (*KIT1, KIT2, KIT4)				
31.	7-D19	6.612	PLATE, P/S PUMP PRESS (*KIT1)	95-02	F (L36)	1	26025456

cardiagn.com

							MF06-021
32.		N.S.	SEAL, O-RING (*KIT1, KIT3)		.....		
33.	7-D19	6.612	SPRING, P/S PUMP PRESS PLT (*KIT1)	95-02	F (L36)	1	26002623
35.		N.S.	SEAL, O-RING (*KIT1, KIT3)		.....		
36.	7-D19	6.609	PLATE, P/S PUMP END (*KIT1) ..	95-02	F (L36)	1	26002626
37.	7-D20	6.616	RING, P/S PUMP SHF BRG RET (*KIT1)	95-02	F (L36)	1	26002616

SERVICE KITS

1.	7-D17	6.605	PUMP, P/S (INCLS 6-37)	95-02	F (L36)	1	26040444
2.	7-D19	6.610	RING KIT, P/S PUMP (INCLS 26-30) (W/ROTOR & VANE)	95-02	F (L36)	1	26046606
3.	7-D19	6.609	SEAL KIT, P/S PUMP (INCLS 11, 15, 32, 35) (AC-DELCO #36-7157)	95-02	F (L36)	1	26053277
4.	7-D20	6.614	SHAFT KIT, P/S PUMP (INCLS 7, 30) (W/RET RING)	95-02	F (L36)	1	26002883

RPO DEFINITIONS
L36 -- ENGINE GAS, 6 CYL, 3.8K, MFI, V6, HO (ERV6 SERIES)

cardiagn.com

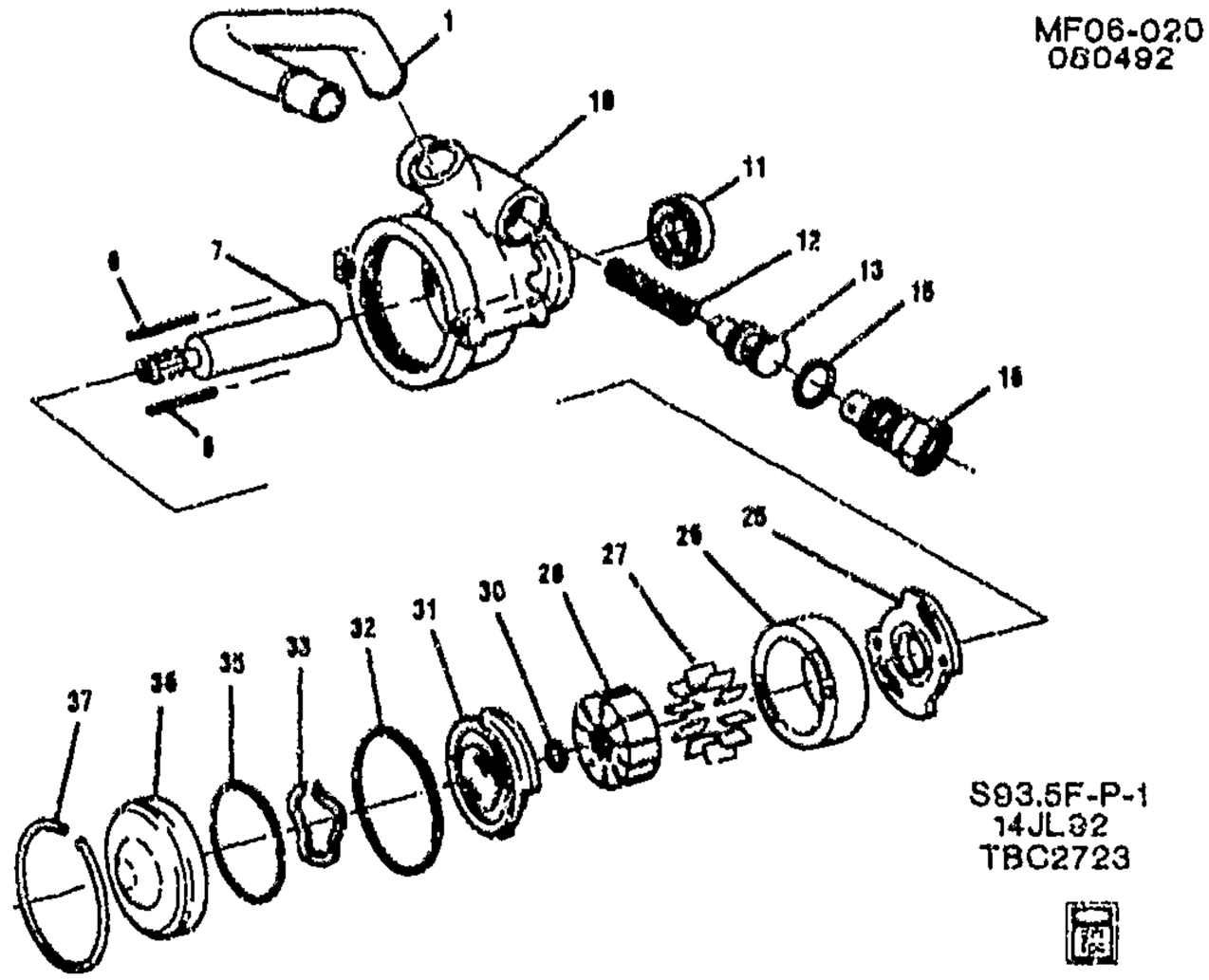

MF06-0201

1998-2002 F STEERING PUMP ASM (LS1/5.7G)

NOTE: THIS PUMP IS A COMPACK BUSHING WITH REVERSE ROTATION.

1.		N.S.	TUBE, RETURN (NOT USED ON 1998) (PART OF 10				
6.		N.S.	PIN, P/S PUMP RING (*KIT1)				
7.	7-D20	6.614	SHAFT KIT, P/S PUMP (INCLS 30) (W/RET RING) (*KIT1)	98-02	F (LS1)	1	26002683
10.		N.S.	HOUSING, HYD PUMP (INCL. 1) (*KIT1)				
11.	7-D20	6.617	SEAL, P/S PUMP SHF (*KIT1, KIT3)	98-02	F (LS1)	1	26043126
12.		N.S.	SPRING, P/S PUMP FLOW C/VLV (*KIT1)				
13.	7-D20	6.624	VALVE, P/S PUMP FLOW CONT (*KIT1)	98-02	F (LS1)	1	26041004
15.	7-D22	6.674	SEAL, P/S PUMP FTG (O RING) (14.5 I.D.) (*KIT1, KIT3) (6.635)	98-02	F (LS1)	1	26020642
16.	7-D20	6.624	FITTING, P/S PUMP (*KIT1)	98-02	F (LS1)	1	26056503
25.		N.S.	PLATE, HYD PUMP THR (*KIT1)				
26.		N.S.	RING, PUMP (*KIT1, KIT2)				
27.		N.S.	VANE, PUMP ROTOR (*KIT1, KIT2)				
28.		N.S.	ROTOR, PUMP (*KIT1, KIT2)				
30.		N.S.	RING, SHAFT RETAINING (PART OF 7) (*KIT1, KIT2)				
31.		N.S.	PLATE, HYD PUMP PRESS (*KIT1)				
32.		N.S.	SEAL, O RING (63.2 I.D.) (*KIT1, KIT3)				
33.		N.S.	SPRING, P/S PUMP PRESS PLT (*KIT1)				

cardiagn.com

35.		N.S.	SEAL, O RING (55.5 I.D.) (*KIT1, KIT3)					
36.		N.S.	PLATE, P/S PUMP END (*KIT1)					
37.		N.S.	RING, P/S PUMP SHF BRG RET (*KIT1)					

SERVICE KITS

1.	7-D17	6.605	PUMP KIT, P/S (INCLS 1-37) (W/O RSVR & CAP)	98-02	F (LS1)		1	26068936
2.	7-D19	6.610	RING KIT, P/S PUMP (INCLS 26-30) (W/ROTOR & VANE)	98-02	F (LS1)		1	26046606
3.	7-D19	6.609	SEAL KIT, P/S PUMP (INCLS 11, 15, 32, 35) (AC-DELCO #36-7157)	98-02	F (LS1)		1	26053277

RPO DEFINITIONS

LS1 – ENGINE GAS, 8 CYL, 5.7L, SFI, ALUMINUM ENGINE

cardiagn.com

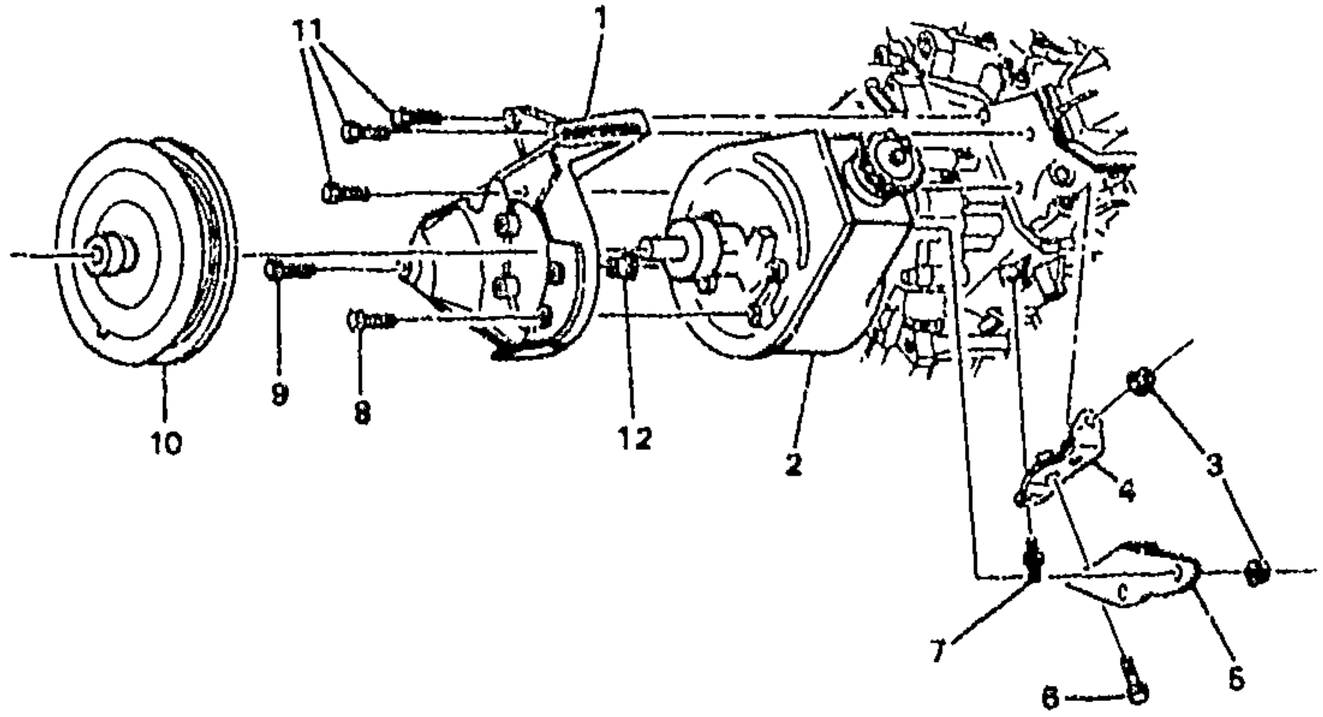

MF06-031
080392

MF06-031

1993-1995 F STEERING PUMP MOUNTING (L32/3.4S)

1.	7-M28	2.183	BRACKET, IGN COIL & P/S PUMP (INCLS 12)	93-95	F (L32)	1	10115882
	7-D18	6.606	BRACKET, IGN COIL & P/S PUMP (INCLS 12) (2.183)	93-95	F (L32)	1	10115882
2.	7-D17	6.605	PUMP, P/S (SEE "STEERING PUMP ASM" ILLUSTRATION IN GRP. 6.000 FOR DETAILED VIEW.)	93-95	F (L32)	1	26019L35
3.		8.915	NUT, HFH, 10X1.5 6H THD, 21.3 OD, 9.8 THK 13 HEX DR, GRD 9, ZF (P/S PUMP SUPT) (8.917)	93-95	.....	3	10255857
4.	7-D18	6.606	BRACE, P/S PUMP RR	93-95	F (L32)	1	10166314
5.	7-D18	6.606	SUPPORT, P/S PUMP	93-95	F (L32)	1	10166313
6.		8.900	BOLT, HFH M10X1.5X20 9.8 PZOR (P/S PUMP RR BR)	93-95	.....	2	11508202
7.	7-D18	6.606	STUD, P/S PUMP SUPT (HFH M8X1.25X16 M8X1.25X15, 38 TL, 17.6 OD, POR, 9.8)) (3.275)	93-95	F (L32)	1	10066075
8.		8.900	BOLT, HFH M10X1.5X30 10.9 FL BLK 21.5 OD 26MM THD POINTED (P/S PUMP)	93-95	.....	4	12337993
9.		8.900	BOLT, M10X1.5X32, 28.10 THD, 20.28 OD, 10.9, GM 7114M (IGN COIL & P/S PUMP BRKT) (AC-DELCO #179-2006)	93-95	F (L32)	1	15726400
10.	7-D21	6.655	PULLEY, P/S PUMP (STAMPED NUT)	93-95	F (L32)	1	14100507
11.	7-M28	2.183	BOLT, IGN COIL & P/S PUMP BRKT (HWH M10.0X1.50X40, 26THD, 10.9 PO) (8.900)	93-95	F (L32)	3	14050422
12.	7-M28	2.183	SPACER, IGN COIL & P/S PUMP BRKT (PART OF 1)	93-95	F (L32)	1	10218120
	7-D18	6.606	SPACER, IGN COIL & P/S PUMP BRKT (PART OF 1) (2.183)	93-95	F (L32)	1	10218120

RPO DEFINITIONS
L32 - ENGINE,3.4L,V6,(3.4S),SFI,OHV

cardiagn.com

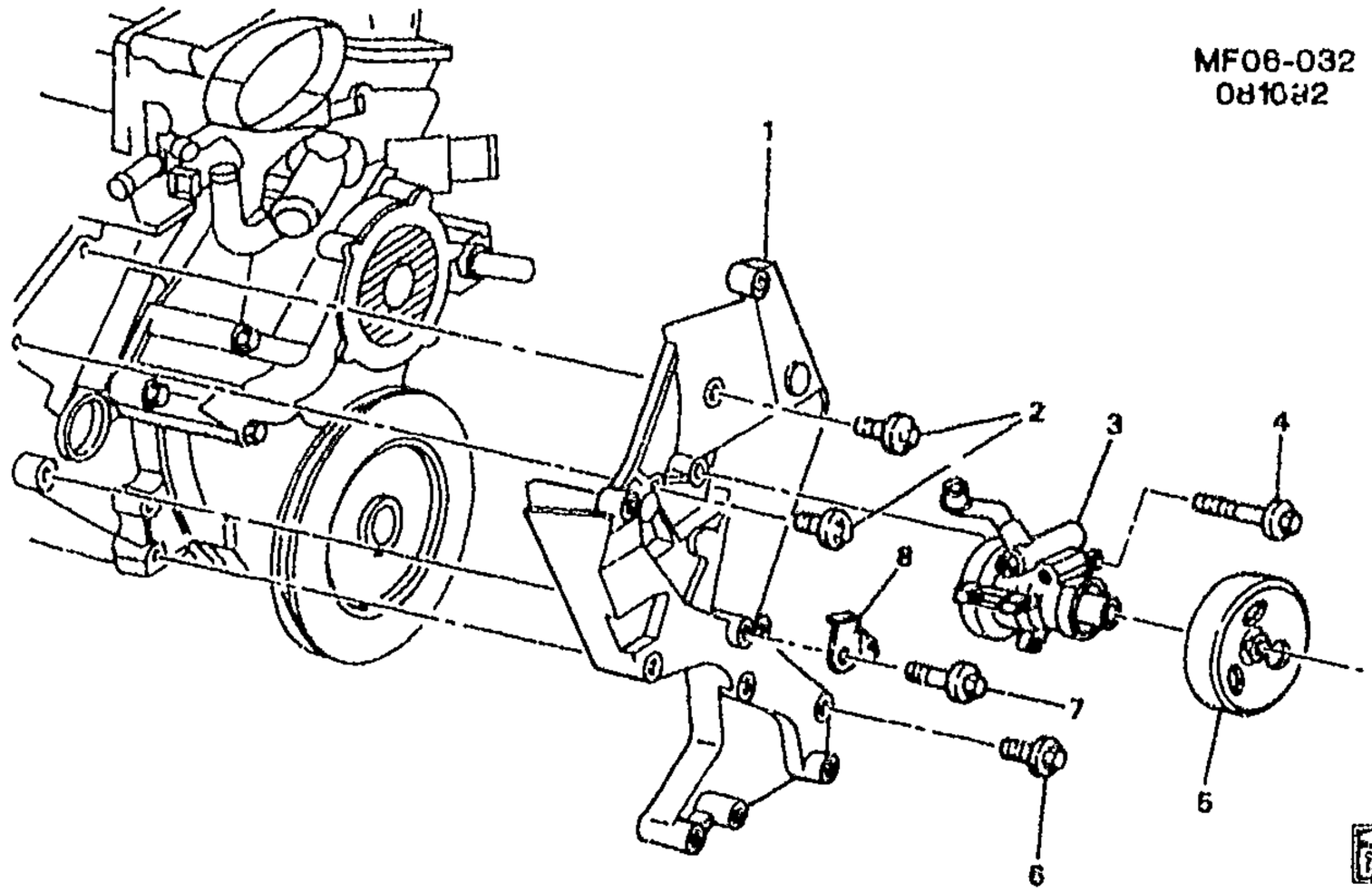

MF06-032

1993–1997 F STEERING PUMP MOUNTING (LT1/5.7P)

1.	7–D18	6.606	BRACKET, GEN & A/C CMPR & P/S PUMP (2.277)	93–97	F (LT1)	1	10239875
2.		8.900	BOLT, HFH 3/8–16X1.12 280M ZP FULL THD .75–OD (GEN BRKT)	93–97	.....	2	9440071
3.	7–D17	6.605	PUMP, P/S (SEE "STEERING PUMP ASM" ILLUSTRATION IN GRP. 6.000 FOR DETAILED VIEW.)	93–97	F (LT1)	1	26040864
4.		8.900	BOLT, HFH M8X1.25X75, 33.2 THD, 9.8 PO (P/S PUMP)	93–97	.....	2	10130949
5.	7–D21	6.655	PULLEY, P/S PUMP	93–97	F (LT1)	1	10219382
6.	7–N4	2.277	BOLT, GEN BRKT (3.655)	93–97	F (LT1)	1	14084400
7.	7–N4	2.277	BOLT, GEN BRKT	93–97	F (LT1)	1	10206119
8.	7–N4	2.251	SUPPORT, SPLG WIRE	93–97	F (LT1)	1	10223670

RPO DEFINITIONS

LT1 – ENGINE–GAS, 8 CYL, 5.7L(5.7P),MFI,HO

cardiagn.com

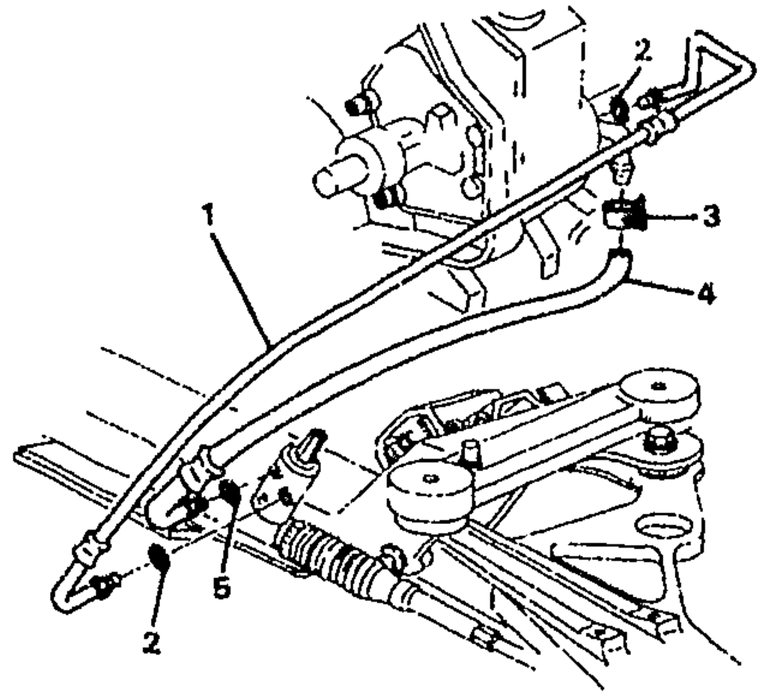

MF06-034

1993-1995 F STEERING PUMP LINES (L32/3.4S)

1.	7-D21	6.670	HOSE, P/S GR INL (INCLS 2)	93-95	F (L32)	1	26037509
2.	7-D22	6.674	SEAL, P/S GR INL PIPE (O RING) (PART OF 1) (7.65MM IDX1.63MM THK)	93-95	F	1	26001594
3.		8.948	CLAMP, WORM GEAR, 1/2-13/16 (PART OF 4)	93-95	.....	1	22527587
4.	7-D22	6.671	HOSE, P/S GR OTLT (W/CLAMP) (INCLS 3, 5)	93-95	F (L32)	1	26019299
5.	7-D22	6.674	SEAL, P/S GR OTLT PIPE (O RING) (PART OF 4) (7.65MM IDX1.63MM THK)	93-95	F	1	26001594

RPO DEFINITIONS
L32 – ENGINE,3.4L,V6,(3.4S),SFI,OHV

cardiagn.com

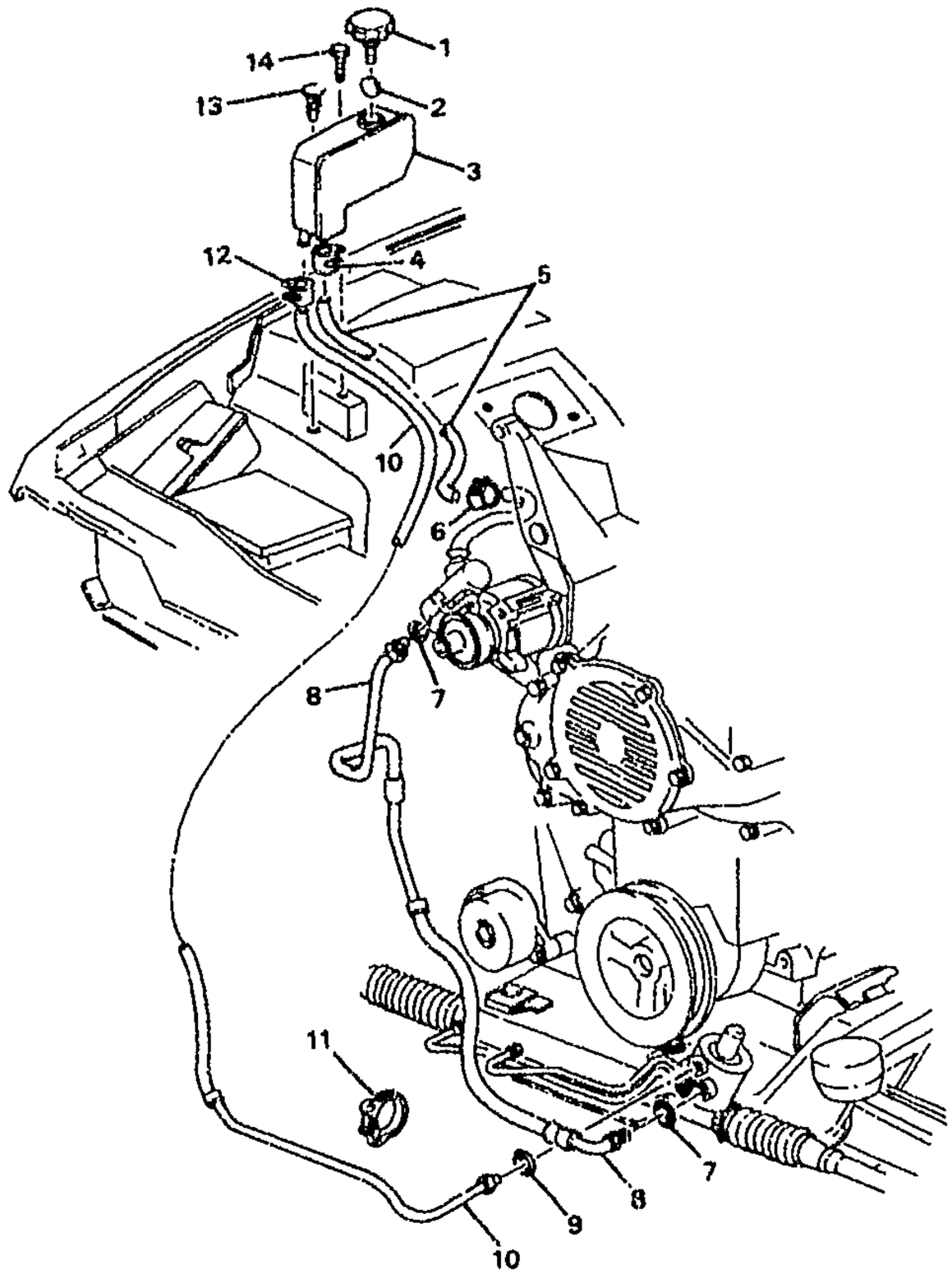

MF06-030

1993-1997 F STEERING PUMP LINES (LT1/5.7P)

1.	7-D20	6.635	CAP, P/S FLUID RSVR (AC-DELCO #36-7178)	93-97	F (LT1)	1	26040467
2.	7-D19	6.608	MAGNET, P/S FLUID RSVR (PART OF 3)	93-95	F	1	5692682
	7-D19	6.608	MAGNET, P/S FLUID RSVR (PART OF 3)	96-97	F (LT1)	1	5692682
3.	7-D20	6.635	RESERVOIR, P/S FLUID (INCL 2)	93-97	F (LT1)	1	26019594
4.	7-D22	6.672	CLAMP, P/S FLUID RSVR HOSE (PART OF 5)		.....		
5.	7-D22	6.671	HOSE, P/S FLUID RSVR (W/CLAMPS) (INCLS 4, 6)	93-97	F (LT1)	1	26025371
6.	7-D22	6.672	CLAMP, P/S FLUID RSVR HOSE (PART OF 5)		.....		
7.	7-D22	6.674	SEAL, P/S GR INL PIPE (O RING) (PART OF 8) (7.65MM IDX1.63MM THK)	93-97	F	1	26001594

cardiagn.com

	7-D22	6.674	SEAL, P/S GR INL PIPE (O RING) (PART OF 8) (7.65MM IDX1.63MM THK)	97	F (LT1)	2	26001594
8.		DISCON	HOSE, P/S GR INL (INCL 7)	93	F (LT1)	1	26042675
	7-D21	6.670	HOSE, P/S GR INL (INCL 7)	94-97	F (LT1)	1	26042640
9.	7-D22	6.674	SEAL, P/S GR OTLT PIPE (O RING) (PART OF 10) (7.65MM IDX1.63MM THK)	93-97	F	1	26001594
10.	7-D22	6.671	HOSE, P/S GR OTLT (W/CLAMP) (INCLS 9, 12)	93-97	F (LT1)	1	26019302
11.	7-D22	6.672	CLIP, P/S GR PIPE	93-94	F (FE2)	1	26039827
	7-D22	6.672	CLIP, P/S GR PIPE	95-97	F (FE2, F41)	1	26039827
12.		8.948	CLAMP, WORM GEAR, 1/2-13/16 (PART OF 10)	93-97		1	22527587
13.		8.950	RETAINER, FITS .250 HOLE, 1.01LG.700-OD NYLON BLACK (P/S FLUID RSVR)	93-97		1	10121502
14.		8.977	SCREW, 6.3X1.81X20 (P/S FLUID RSVR)	93-97		1	11509051

RPO DEFINITIONS

FE2 -- SUSPENSION SYSTEM,RIDE AND HANDLING
F41 -- SUSPENSION,FIRM RIDE HANDLING,FRONT AND REAR
LT1 -- ENGINE-GAS, 8 CYL, 5.7L(5.7P),MFI,HO

cardiagn.com

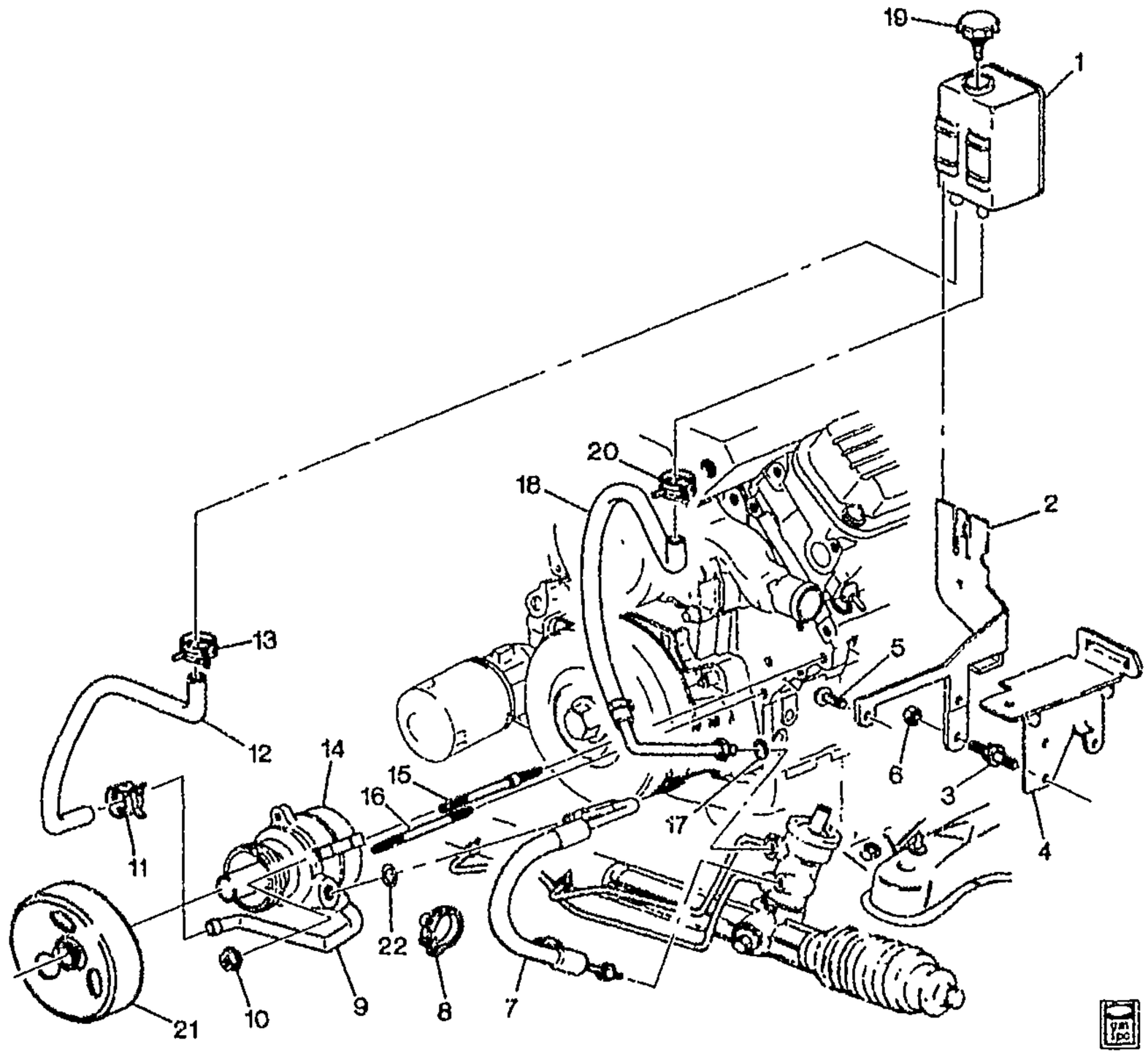

MF06-037

1995-1997 F STEERING PUMP LINES AND PUMP MTG (L36/3.8K)

1.	7-D20	6.635	RESERVOIR, P/S FLUID (AC-DELCO #36-7172)	95-97	F (L36)	1	26024352
2.	7-D20	6.635	BRACKET, P/S FLUID RSVR	95-97	F (L36)	1	10247768
3.	7-D20	6.635	STUD, P/S FLUID RSVR BRKT (M10X1.5X30/M6X1X26) (3.655) ..	95-97	F (L36)	2	10186163
	7-D20	6.635	STUD, P/S FLUID RSVR BRKT (M10X1.5/30/M6X1X13) (8.981) ..	96-97	F (L36)	1	11516976
4.	7-A17	4.730	BRACKET, BRK PRESS MOD VLV	95-97	F (EXC NW9)	1	10257051
5.	7-D20	6.635	BOLT, P/S FLUID RSVR BRKT (M10X1.5X25) (3.740)	95-97	F (L36)	1	11515510
6.		8.917	NUT, HEX W/CON WA 6X1X5.5 16-OD ZP 9 (P/S FLUID RSVR BRKT)	95-97	F	2	11517293
7.	7-D21	6.670	HOSE, P/S GR INL (INCLS 22) ...	95-97	F (L36)	1	26064197
8.	7-D22	6.672	CLIP, P/S GR PIPE	95-97	F (FE2, F41)	1	26039827
		N.S.	CLIP, P/S GR PIPE	96-97	.....		
9.		N.S.	TUBE, P/S RETURN (PART OF 14)		.....		

cardiagn.com

							MF06-037
10.		8.917	NUT, HFH, M8X1.25, 17.9 OD, 738 THK, 13MM HEX, 10, ZF (P/S PUMP) (8.915) (AC-DELCO #11514596)	95-97	F	2	11514596
11.	7-D22	6.672	CLAMP, P/S FLUID RSVR HOSE (PART OF 12)	95-97	F	1	26028657
12.	7-D22	6.671	HOSE, P/S FLUID RSVR (INCLS 11, 13)	95-97	F (L36)	1	26040373
13.	7-D22	6.672	CLAMP, P/S FLUID RSVR HOSE (PART OF 12)	95-97	F	1	26036851
14.	7-D17	6.605	PUMP, P/S (INCLS 9)	95-97	F (L36)	1	26040444
15.	7-D18	6.606	STUD, P/S PUMP (RIGHT SIDE UPR MTG HOLE)	95-97	F	1	24503245
16.	7-D18	6.606	STUD, P/S PUMP (LEFT SIDE LWR MTG HOLE)	95-97	F	1	24504967
17.	7-D22	6.674	SEAL, P/S GR OTLT PIPE (O RING) (PART OF 18) (7.65MM IDX1.63MM THK)	95-97	F	1	26001594
18.	7-D22	6.671	HOSE, P/S GR OTLT (INCLS 17, 20)	95-97	F (L36)	1	26044547
19.	7-D20	6.635	CAP, P/S FLUID RSVR (AC-DELCO #36-7194)	95-97	F (L36)	1	26039660
20.		8.948	CLAMP, WORM GEAR, 1/2-13/16 (PART OF 18)	95-97	F	1	22527587
21.	7-D21	6.655	PULLEY, P/S PUMP	95-97	F (L36)	1	24502200
22.	7-D22	6.674	SEAL, P/S GR INL PIPE (O RING) (PART OF 7) (7.65MM IDX1.63MM THK)	95-97	F	1	26001594

RPO DEFINITIONS

FE2 – SUSPENSION SYSTEM,RIDE AND HANDLING
F41 -- SUSPENSION,FIRM RIDE HANDLING,FRONT AND REAR
L36 – ENGINE GAS, 6 CYL, 3.8K, MFI, V6, HO (ERV6 SERIES)
NW9 – TRACTION CONTROL ELECTRONIC

cardiagn.com

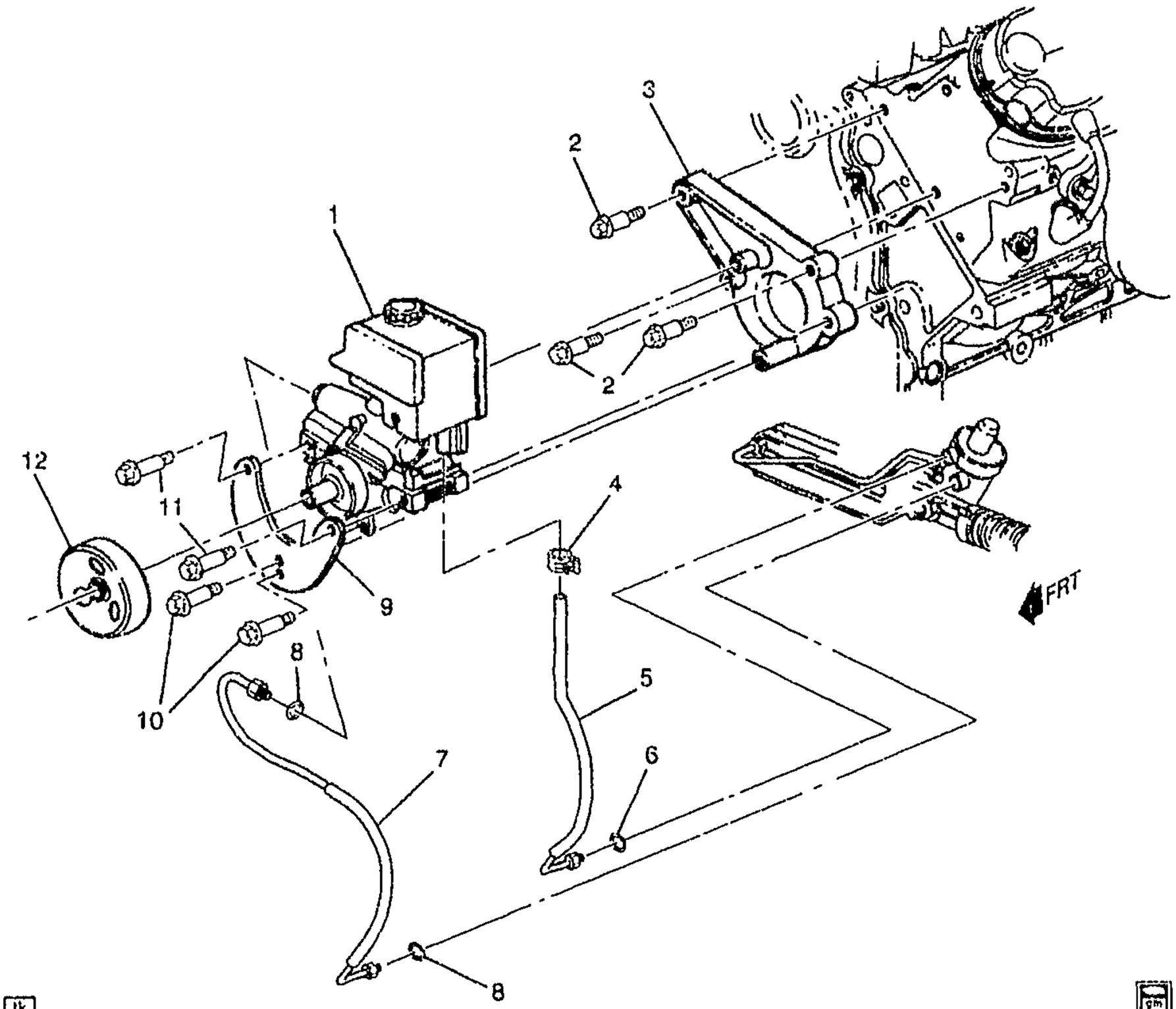

MF06-039

1998-2002 F STEERING PUMP LINES AND PUMP MTG (LS1/5.7G)(EXC V12)

1.	7-D17	6.605	PUMP KIT, P/S (W/O RSVR & CAP)	98-02	F (LS1)	1	26068936
2.		8.900	BOLT, HFH, M10X1.5X35, 32THD, 22.3 OD, 10.9, 7114M, MACH (P/S PUMP BRKT)	98-02	F	AR	11515767
3.	7-D18	6.606	BRACKET, P/S PUMP	98-99	F (LS1)	1	12557331
	7-D18	6.606	BRACKET, P/S PUMP (USED ON VEHILES THAT HAVE BRACE 12555693 MOUNTED TO FRONT OF P/S PUMP. FOR 2ND DESIGN SEE 12561584.)	00	F (LS1) (1ST DES)	1	12557331
	7-D18	6.606	BRACKET, P/S PUMP (FOR VEHICLES W/O BRACE 12555693 MOUNTED TO FRONT OF P/S PUMP. FOR 1ST DESIGN SEE 12557331.)	00	F (LS1) (2ND DES)	1	12561584

cardiagn.com

	7-D18	6.606	BRACKET, P/S PUMP (FOR VEHICLES W/O BRACE 12555693 MOUNTED TO FRONT OF P/S PUMP. FOR 1ST DESIGN SEE 12557331.)	01-02	F (LS1)	1	12561584
4.		8.948	CLAMP, WORM GEAR, 1/2-13/16 (P/S PUMP ADJ BRKT ADJ)	98-02	F	1	22527587
5.	7-D22	6.671	HOSE, P/S GR OTLT	98-02	F (LS1) (EXC V12)	1	26048589
6.	7-D22	6.674	SEAL, P/S GR OTLT HOSE (7.65MM IDX1.63MM THK)	98-02	F (LS1) (EXC V12)	1	26001594
7.	7-D21	6.670	HOSE, P/S GR INL	98-02	F (LS1)	1	26075068
8.	7-D22	6.674	SEAL, P/S GR INL HOSE (O RING) (7.65MM IDX1.63MM THK)	98-02	F (LS1) (EXC V12)	1	26001594
9.	7-D18	6.606	BRACE, P/S PUMP FRT	98-99	F (LS1)	1	12555693
	7-D18	6.606	BRACE, P/S PUMP FRT (W/FRT BRACES, NO COMPATABLE 2ND DESIGN)	00	F (LS1) (1ST DES)	1	12555693
	7-D18	6.606	BRACE, P/S PUMP FRT	01-02	F	1	12555693
10.		8.900	BOLT, M8X1 (P/S PUMP BR)	98-02	.....	AR	11516336
11.	7-D18	6.606	BOLT, P/S PUMP BRKT (M8X1.25X84MM) (3.275)	98-01	F (LS1)	2	14078096
	7-D18	6.606	BOLT, P/S PUMP BRKT (0.030) ..	02	F (LS1)	2	11516967
12.	7-D21	6.655	PULLEY, P/S PUMP	98-02	F (LS1)	1	12559885

RPO DEFINITIONS
LS1 – ENGINE GAS, 8 CYL, 5.7L, SFI, ALUMINUM ENGINE
V12 – COOLING SYSTEM,POWER STEERING FLUID

cardiagn.com

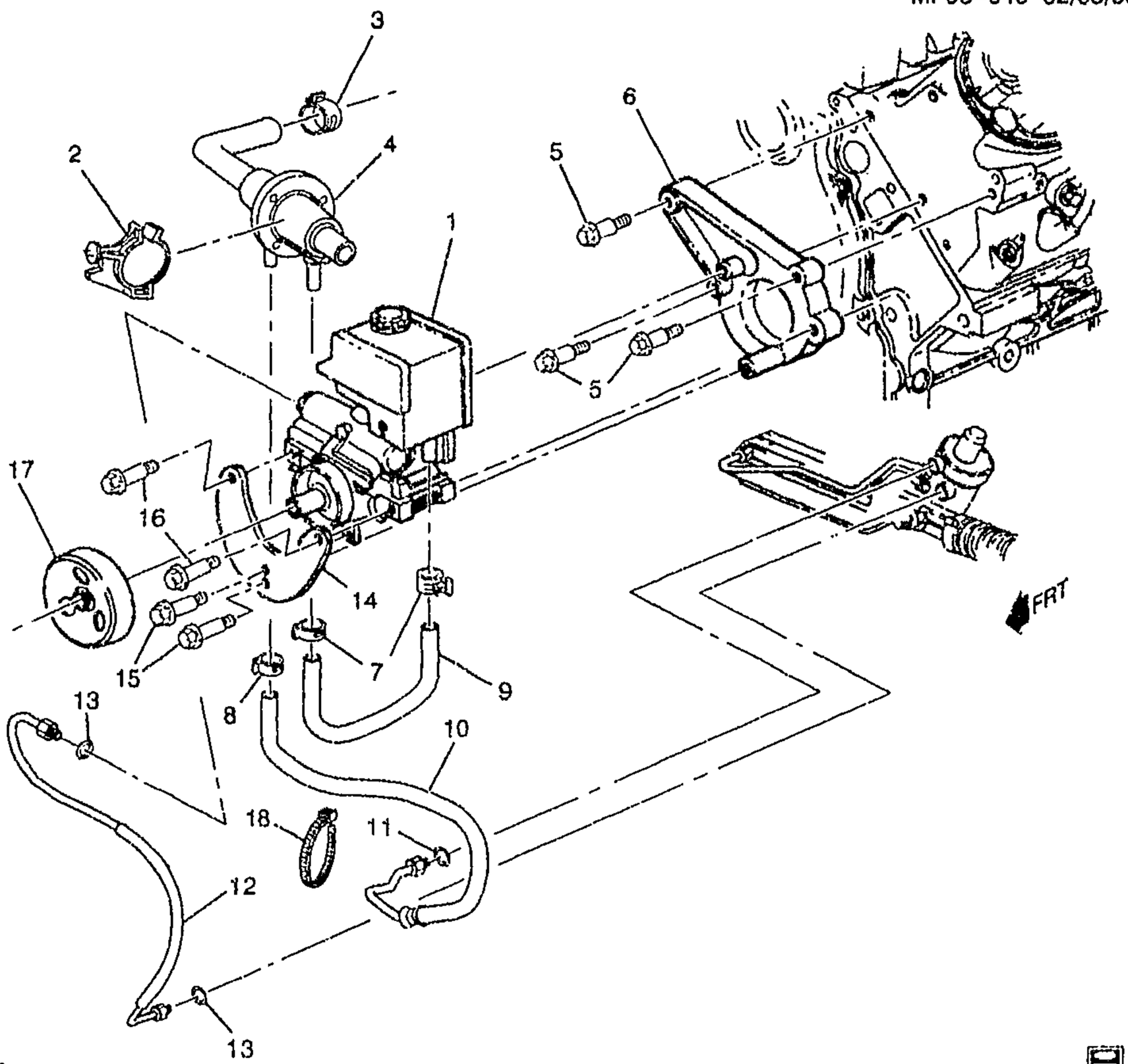

MF06-040

1998-2002 F STEERING PUMP LINES AND PUMP MTG (LS1/5.7G)(V12)

1.	7-D17	6.605	PUMP KIT, P/S (W/O RSVR & CAP)	98-02	F (LS1)	1	26068936
2.	7-D17	6.602	CLIP, P/S FLUID CLG PIPE	98-02	F (LS1, V12)	1	10414272
3.		8.948	CLAMP, HOSE SPRING *BLACK, 42MM - NOMINAL SIZE (RAD INL HOSE)	98-02	.....	AR	15024902
4.	7-D17	6.600	COOLER, P/S FLUID	98-02	F (LS1, V12) (EXPORT)	1	10417037
5.		8.900	BOLT, HFH, M10X1.5X35, 32THD, 22.3 OD, 10.9, 7114M, MACH (P/S PUMP BRKT)	98-02	F	AR	11515767
6.	7-D18	6.606	BRACKET, P/S PUMP	98-99	F (LS1)	1	12557331

cardiagn.com

	7-D18	6.606	**BRACKET**, P/S PUMP (USED ON VEHILES THAT HAVE BRACE 12555693 MOUNTED TO FRONT OF P/S PUMP. FOR 2ND DESIGN SEE 12561584.)	00	F (LS1) (1ST DES)	1	12557331
	7-D18	6.606	**BRACKET**, P/S PUMP (FOR VEHICLES W/O BRACE 12555693 MOUNTED TO FRONT OF P/S PUMP. FOR 1ST DESIGN SEE 12557331.)	00	F (LS1) (2ND DES)	1	12561584
	7-D18	6.606	**BRACKET**, P/S PUMP (FOR VEHICLES W/O BRACE 12555693 MOUNTED TO FRONT OF P/S PUMP. FOR 1ST DESIGN SEE 12557331.)	01-02	F (LS1)	1	12561584
7.		8.948	**CLAMP**, WORM GEAR, 1/2-13/16 (P/S PUMP ADJ BRKT ADJ)	98-02	F	2	22527587
8.		8.948	**CLAMP**, SPRING BAND HOSE (M16X1) (P/S GR OTLT HOSE) ...	98-02	F	1	11516255
9.	7-D17	6.602	**HOSE**, P/S FLUID CLR OTLT	98-02	F (LS1, V12)	1	26068526
10.	7-D17	6.602	**HOSE**, P/S FLUID CLR INL	98-02	F (LS1, V12)	1	26068527
11.	7-D22	6.674	**SEAL**, P/S GR OTLT HOSE (7.65MM IDX1.63MM THK)	98-02	F (LS1) (EXC V12)	1	26001594
12.	7-D21	6.670	**HOSE**, P/S GR INL	98-02	F (LS1)	1	26075068
13.	7-D22	6.674	**SEAL**, P/S GR INL HOSE (O RING) (7.65MM IDX1.63MM THK)	98-02	F (LS1) (EXC V12)	1	26001594
14.	7-D18	6.606	**BRACE**, P/S PUMP FRT	98-99	F (LS1)	1	12555693
	7-D18	6.606	**BRACE**, P/S PUMP FRT (W/FRT BRACES, NO COMPATABLE 2ND DESIGN)	00	F (LS1) (1ST DES)	1	12555693
	7-D18	6.606	**BRACE**, P/S PUMP FRT	01-02	F	1	12555693
15.		8.900	**BOLT**, M8X1 (P/S PUMP BR)	98-02	F (LS1)	2	11516336
16.	7-D18	6.606	**BOLT**, P/S PUMP BRKT (M8X1.25X84MM) (3.275)	98-01	F (LS1)	2	14078096
	7-D18	6.606	**BOLT**, P/S PUMP BRKT (0.030) ..	02	F (LS1)	2	11516967
17.	7-D21	6.555	**PULLEY**, P/S PUMP	98-02	F (LS1)	1	12559885
18.		3.965	**STRAP**, ADJ TIE 3/4X9/32X255MM (P/S GR HOSE)	98-02	F	AR	11509067

RPO DEFINITIONS
LS1 – ENGINE GAS, 8 CYL, 5.7L, SFI, ALUMINUM ENGINE
V12 – COOLING SYSTEM,POWER STEERING FLUID

cardiagn.com

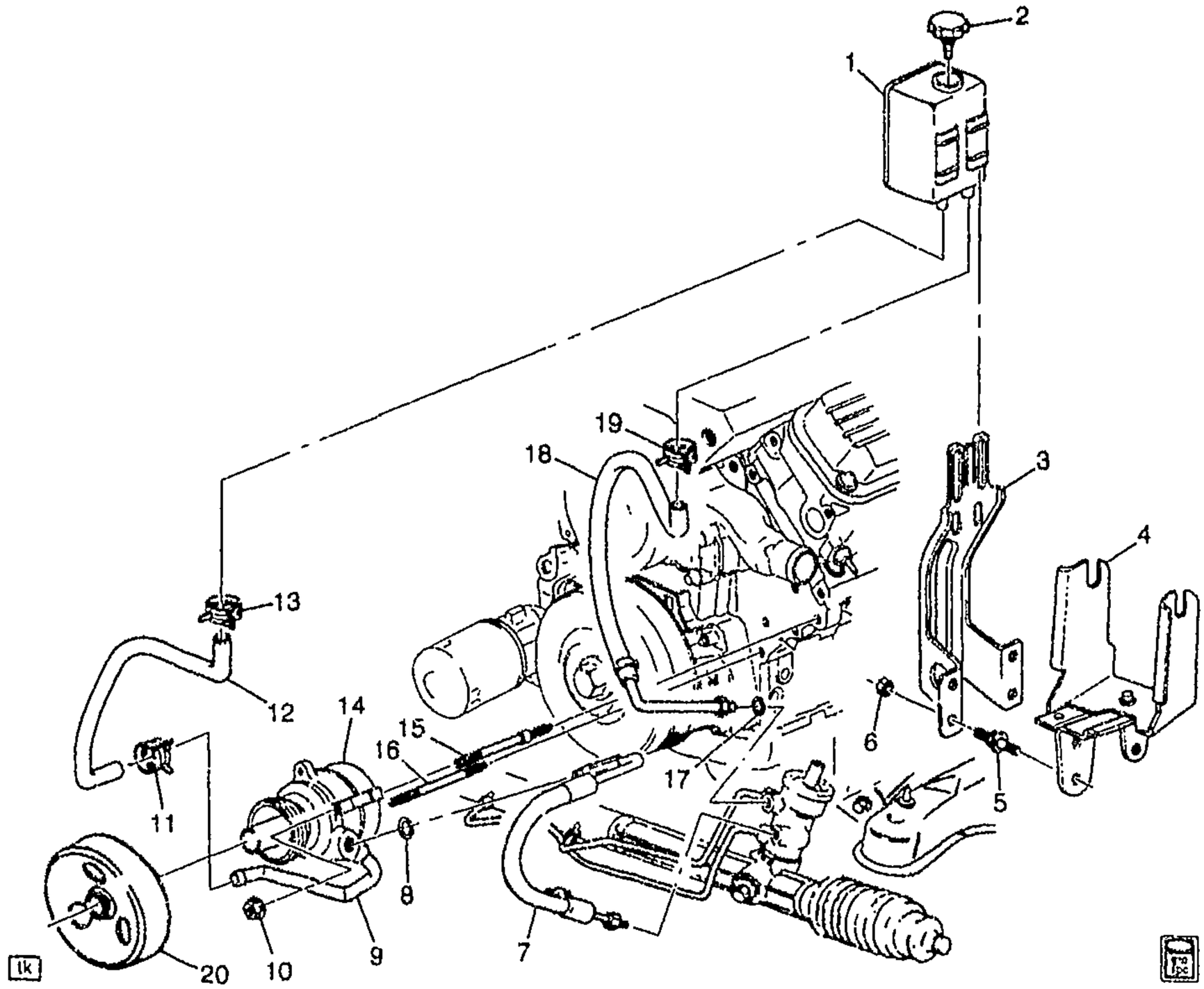

MF06-041

1998-2002 F STEERING PUMP LINES AND PUMP MTG (L36/3.8K)

1.	7-D20	6.635	RESERVOIR, P/S FLUID (AC-DELCO #36-7172)	98-02	F (L36)	1	26024352
2.	7-D20	6.635	CAP, P/S FLUID RSVR (AC-DELCO #36-7194)	98-01	F (L36)	1	26039660
	7-D20	6.635	CAP, P/S FLUID RSVR (AC-DELCO #36-7261)	02	F (L36)	1	26095240
3.	7-D20	6.635	BRACKET, P/S FLUID RSVR	98-02	F (L36)	1	10287708
4.	7-A17	4.730	BRACKET, BRK PRESS MOD VLV	98-02	F	1	10287204
5.	7-D20	6.635	STUD, P/S FLUID RSVR BRKT (M10X1.5/30/M6X1X13) (8.981) ..	98-02	F (L36)	4	11516976
6.		8.917	NUT, HEX W/CON WA 6X1X5.5 16-OD ZP 9 (P/S FLUID RSVR BRKT)	98-02	F	4	11517293
7.	7-D21	6.670	HOSE, P/S GR INL (INCLS 8)	98-02	F (L36)	1	26064197
8.	7-D22	6.674	SEAL, P/S GR INL HOSE (O RING) (PART OF 7) (7.65MM IDX1.63MM THK)	98-02	F	1	26001594
9.		N.S.	TUBE, P/S RETURN (PART OF 14)		.....		

cardiagn.com

							MF06-041
10.		8.917	NUT, HFH, M8X1.25, 17.9 OD, 738 THK, 13MM HEX, 10, ZF (P/S PUMP) (8.915) (AC-DELCO #11514596)	98-02	F	2	11514596
11.	7-D22	6.672	CLAMP, P/S FLUID RSVR HOSE (PART OF 12)	98-02	F	1	26028657
12.	7-D22	6.671	HOSE, P/S FLUID RSVR (INCLS 11, 13)	98-02	F (L36)	1	26040373
13.	7-D22	6.672	CLAMP, P/S FLUID RSVR HOSE (PART OF 12)	98-02	F	1	26036851
14.	7-D17	6.605	PUMP, P/S (INCLS 9)	98-02	F (L36)	1	26040444
15.	7-D18	6.606	STUD, P/S PUMP (RIGHT SIDE UPR MTG HOLE)	98-02	F	1	24503245
16.	7-D18	6.606	STUD, P/S PUMP (LEFT SIDE LWR MTG HOLE)	98-02	F	1	24504987
17.	7-D22	6.674	SEAL, P/S GR OTLT PIPE (O RING) (PART OF 18) (7.65MM IDX1.63MM THK)	98-99	(L36)		26001594
	7-D22	6.674	SEAL, P/S GR OTLT HOSE (PART OF 18) (7.65MM IDX1.63MM THK)	00-02	F (L36)	1	26001594
18.	7-D22	6.671	HOSE, P/S GR OTLT (INCLS 17, 19)	98-99	F (L36)	1	26044547
	7-D22	6.671	HOSE, P/S GR OTLT (INCLS 17, 19)	00-02	F (L36)	1	26075044
19.		8.948	CLAMP, WORM GEAR, 1/2-13/16 (PART OF 18)	98-02	F	1	22527587
20.	7-D21	6.655	PULLEY, P/S PUMP	98-02	F (L36)	1	24502200

RPO DEFINITIONS
L36 -- ENGINE GAS, 6 CYL, 3.8K, MFI, V6, HO (ERV6 SERIES)

cardiagn.com

ILLUSTRATION INDEX

	TITLE	GRID
1993–2002	F SUSPENSION/REAR	8–F4
1993–1997	F BUMPER/FRONT	8–F17
1998–2002	F BUMPER/FRONT	8–F20
1993–2002	F BUMPER/REAR	8–F23

cardiagn.com

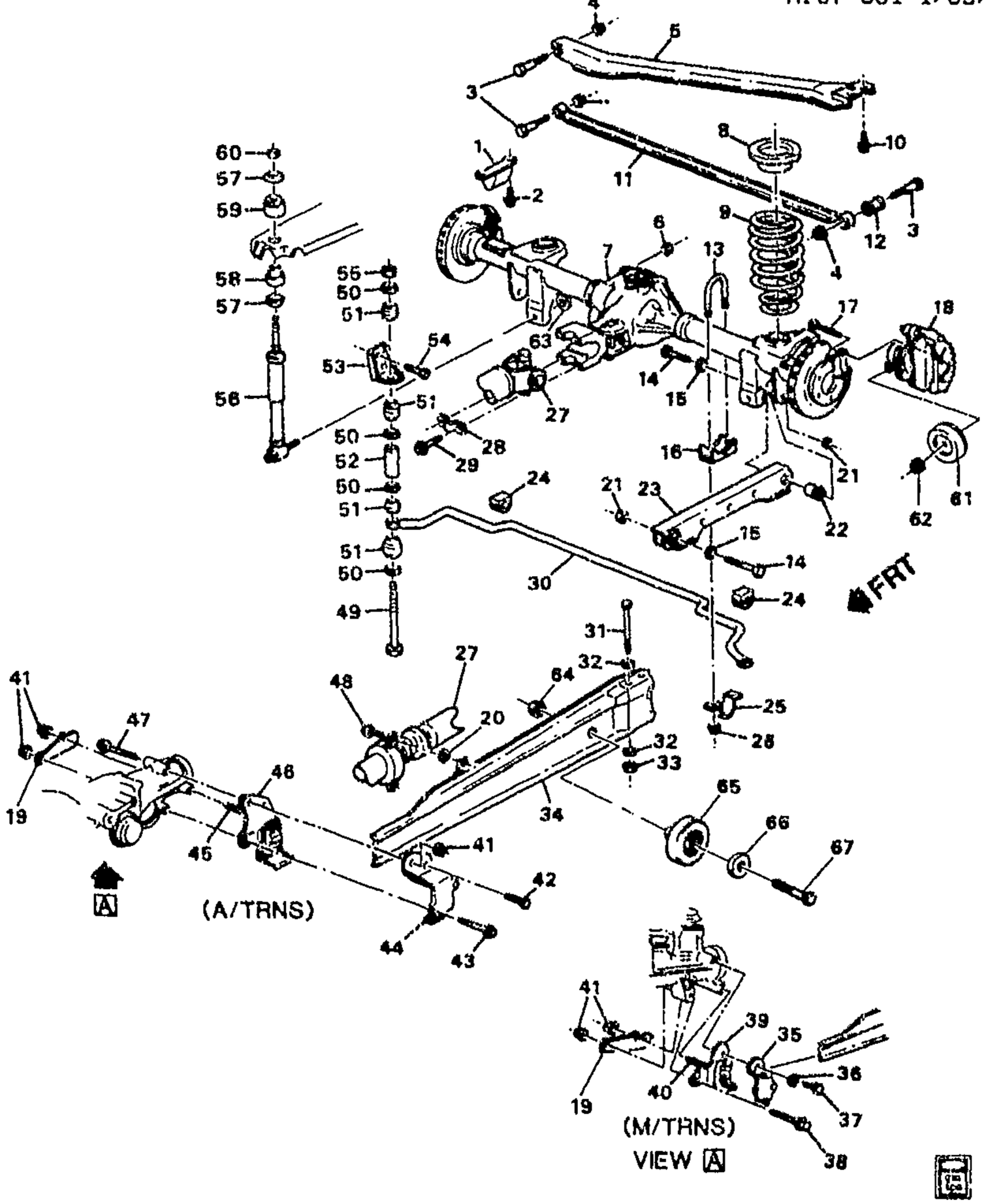

MF07-001

1993-2002 F SUSPENSION/REAR

1.	8-A26	7.535	BUMPER, RR SUSP JOUNCE ...	93-97	F	2	10164173
	8-A26	7.535	BUMPER, RR SUSP JOUNCE ..	98-02	F (QII, QLC)	2	10164173
	8-A26	7.535	BUMPER, RR SUSP JOUNCE ...	98-02	F	2	10282449
2.		8.900	BOLT, HFH, M8X1.25X20, 17THD, 18OD (R/AXL BPR)	93-02	....	4	11515756
3.	8-N25	5.418	BOLT, R/AXL TIE ROD (8.900) ...	93-02	F	3	11516933
4.		8.917	NUT, HEX FLG PREVAILING TORQ (M12X1.75X14) (ZO 10) (R/AXL TIE ROD)	93-02	F	AR	11515744

cardiagn.com

5.	8-N25	5.418	BRACE, R/AXL TIE ROD BRKT	93-02	F	1	10019526
6.	8-A12	7.347	NUT, RR S/ABS	93-94	F	2	22123946
	8-A12	7.347	NUT, RR S/ABS (M14X2X25.5) (HEX W/WA)	95-02	F	2	10274280
7.		N.S.	AXLE, RR (2.73 RATIO) (SERV BY CPS)				
		DISCON	AXLE, RR (3.23 RATIO) (CODE 8HM)	93	F (GU5, J41, Y03) (EXC G80)	1	26019823
		DISCON	AXLE, RR (3.23 RATIO) (CODE 9HM)	93-94	F (GU5, J41) (EXC G80)	1	26038881
		DISCON	AXLE, RR (3.23 RATIO) (CODE 9PF, 9PD, 9PB)	93-94	F (GU5, G80, J65) (EXC J1F)	1	26041287
		DISCON	AXLE, RR (3.23 RATIO) (CODE 9PF, 9PD, 9PB)	93	F (GU5, G80, J65, Y03)	1	26041287
		DISCON	AXLE, RR (3.23 RATIO) (CODE 9HM)	95	F (GU5, J41) (EXC G80, NW9, VE2)	1	26038881
		DISCON	AXLE, RR (3.23 RATIO) (PAINTED FOR EXPORT)	96	F (GU5, G80, J65, VE2) (EXC NW9)	1	12558032
		DISCON	AXLE, RR (3.23 RATIO) (PAINTED FOR EXPORT)	96	F (LT1, GU5, G80, J65) (EXC NW9, VE2)	1	12558032
		DISCON	AXLE, RR (3.23 RATIO) (CODE 7HM)	96-97	F (L36, GU5, J41) (EXC G80, NW9, VE2)	1	12559026
		DISCON	AXLE, RR (3.23 RATIO) (PAINTED FOR EXPORT)	97	F (LT1, L36, GU5, G80, J65) (EXC NW9, VE2)	1	12558032
		DISCON	AXLE, RR (3.23 RATIO) (UNPAINTED FOR DOMESTIC USE) (CODE 8PF)	98	F (LS1, GU5, G80, J65) (EXC NW9, VE2)	1	12554916
		DISCON	AXLE, RR (3.23 RATIO) (UNPAINTED FOR DOMESTIC USE) (CODE 8PF)	98	F (L36, GU5, G80, J65) (EXC VE2)	1	12554916
		DISCON	AXLE, RR (3.23 RATIO) (CODE 8PB)	98	F (LS1, GU5, G80, J65, NW9) (EXC VE2)	1	12554918
		DISCON	AXLE, RR (3.23 RATIO) (CODE 8PY)	98	F (L36, GU5, J65) (EXC G80, NW9, VE2)	1	12559857
	8-N17	5.386	AXLE, RR (3.23 RATIO)	99	F (LS1, GU5, G80, J65) (EXC NW9)	1	12562542
	8-N17	5.386	AXLE, RR (3.23 RATIO)	99	F (L36, GU5, G80, J65)	1	12562542
	8-N17	5.386	AXLE, RR (3.23 RATIO)	99	F (L36, GU5, J65) (EXC G80, VE2)	1	12562544
	8-N17	5.386	AXLE, RR (3.23 RATIO)	99-02	F (LS1, GU5, G80, J65, NW9) (EXC VE2)	1	12570109
	8-N17	5.386	AXLE, RR (3.23 RATIO)	00-02	F (L36, GU5, J65) (EXC G80, VE2)	1	12570106
	8-N17	5.386	AXLE, RR (3.23 RATIO)	00-02	F (L36, GU5, G80, J65) (EXC VE2)	1	12570107
	8-N17	5.386	AXLE, RR (3.23 RATIO)	00-02	F (LS1, GU5, G80, J65) (EXC NW9, VE2)	1	12570107
		DISCON	AXLE, RR (3.23 RATIO) (CODE 4PB, 7PB)	95	F (GU5, G80, J65, NW9) (EXC VE2)	1	12558036
		DISCON	AXLE, RR (3.23 RATIO) (CODE 7PB)	96	F (GU5, G80, J65, NW9) (EXC VE2)	1	12558036
		DISCON	AXLE, RR (3.23 RATIO) (CODE 7PB)	97	F (LT1, GU5, G80, J65, NW9) (EXC VE2)	1	12559036
		DISCON	AXLE, RR (3.23 RATIO) (CODE 9PM, 9PP, 7PM) (PAINTED FOR EXPORT)	95	F (GU5, G80, J65, VE2)	1	12558032
		DISCON	AXLE, RR (3.42 RATIO) (CODE 7HN)	95	F (L36, GU6, J41) (EXC G80, NW9, VE2)	1	12558027

cardiagn.com

		DISCON	AXLE, RR (3.42 RATIO) (CODE 7HN)	97	F (L36, GU6, J41, VE2) (EXC NW9)	1	12558027
		DISCON	AXLE, RR (3.42 RATIO) (CODE 4PE, 7PE)	95	F (GU6, G80, J65, NW9) (EXC VE2)	1	12558037
		DISCON	AXLE, RR (3.42 RATIO) (CODE 4PN, 7PJ) (PAINTED FOR EXPORT)	95	F (GU6, G80, J65) (EXC NW9, VE2)	1	12558033
		DISCON	AXLE, RR (3.42 RATIO) (CODE 7PE)	96-97	F (GU6, G80, J65, NW9) (EXC VE2)	1	12558037
		DISCON	AXLE, RR (3.42 RATIO) (CODE 7PJ) (PAINTED FOR EXPORT)	96	F (GU6, G80, J65) (EXC NW9, VE2)	1	12558033
		DISCON	AXLE, RR (3.42 RATIO) (CODE 7PJ) (PAINTED FOR EXPORT)	96-97	F (L36, GU6, G80, J65) (EXC NW9, VE2)	1	12558033
		DISCON	AXLE, RR (3.42 RATIO) (CODE 7PJ) (PAINTED FOR EXPORT)	97	F (LT1, GU6, G80, J65) (EXC NW9, VE2)	1	12558033
		DISCON	AXLE, RR (3.23 RATIO) (PAINTED FOR EXPORT)	97	F (LT1, L36, GU5, G80, J65, VE2) (EXC NW9) (EXPORT)	1	12558032
		DISCON	AXLE, RR (3.23 RATIO) (PAINTED FOR EXPORT) (CODE 8PM)	98	F (LS1, GU5, G80, J65, VE2) (EXC NW9) (EXPORT)	1	12554917
		DISCON	AXLE, RR (3.23 RATIO) (PAINTED FOR EXPORT) (CODE 8PM)	98	F (L36, GU5, G80, J65, VE2) (EXPORT)	1	12554917
	8-N17	5.386	AXLE, RR (3.23 RATIO)	00-02	F (LS1, GU5, G80, J65, VE2) (EXC NW9) (EXPORT)	1	12570108
	8-N17	5.386	AXLE, RR (3.23 RATIO)	00-02	F (L36, GU5, G80, J65, VE2) (EXPORT)	1	12570108
	8-N17	5.386	AXLE, RR (3.23 RATIO)	02	F (LS1, GU5, G80, J65, NW9, VE2) (EXPORT)	1	12571803
		DISCON	AXLE, RR (3.23 RATIO) (CODE 9PM, 9PP) (PAINTED FOR EXPORT)	93-94	F (GU5, G80, J1F, J65) (EXPORT)	1	12558032
		DISCON	AXLE, RR (3.42 RATIO) (CODE 7HN)	96	F (L36, GU6, J41, VE2) (EXC NW9) (EXPORT)	1	12558027
		DISCON	AXLE, RR (3.42 RATIO) (CODE 7PJ) (PAINTED FOR EXPORT)	96-97	F (LT1, L36, GU6, G80, J65, VE2) (EXC NW9) (EXPORT)	1	12558033
8.	8-A26	7.545	INSULATOR, RR SPR UPR	93-02	F	2	10280379
9.	8-A26	7.503	SPRING, RR (CODE HS, HR, HT)	97-02	F	2	22132889
	8-A26	7.503	SPRING, RR (CODE TB, TC TD, TM)	94-97	F	2	10305134
	8-A26	7.503	SPRING, RR (CODE TB, TC, TD, TM)	94-97	F	2	22077418
	8-A26	7.503	SPRING, RR (CODE TB, TC, TD, TM)	94-97	F	2	22077421
	8-A26	7.503	SPRING, RR (CODE TD, TM)	93	F	2	10305134
	8-A26	7.503	SPRING, RR (CODE TD, TM)	93	F	2	22077418
	8-A26	7.503	SPRING, RR (CODE TD, TM)	93	F	2	22077421
	8-A26	7.503	SPRING, RR (CODE TF, TH, TJ, TK)	93-02	F	2	10305134
	8-A26	7.503	SPRING, RR (CODE TF, TH, TJ, TK)	93-00	F	2	22077421
	8-A26	7.503	SPRING, RR (CODE TP)	94-96	F	2	22132889
10.	8-N25	5.418	BOLT, R/AXL TIE ROD BRKT BR (1.271)	93-02	F	3	14013454
11.	8-N24	5.415	ROD, R/AXL TIE (INCLS 12)	93	F	1	10019451
	8-N24	5.415	ROD, R/AXL TIE (INCLS 12)	94-95	F (EXC 1LE)	1	10019451

cardiagn.com

							MF07-001
	8-N24	5.415	ROD, R/AXL TIE (INCLS 12)	94-95	F (1LE)	1	10262147
	8-N24	5.415	ROD, R/AXL TIE (INCLS 12)	96-97	F (EXC WU8, 1LE)	1	10019451
	8-N24	5.415	ROD, R/AXL TIE (INCLS 12)	96-97	F (WU8, 1LE)	1	10262147
	8-N24	5.415	ROD, R/AXL TIE (INCLS 12)	98-02	F (FE2, FE4, F41)	1	10019451
	8-N24	5.415	ROD, R/AXL TIE (INCLS 12)	98-99	F (FE7)	1	10262147
12.		N.S.	BUSHING, R/AXL TIE ROD (PART OF 11)		.....		
13.	8-A9	7.242	BOLT, RR STAB SHF INSL CLA ..	93-02	F	2	10018208
14.	8-N15	5.381	BOLT, R/AXL LWR CONT ARM (M12X1.75X95 10.9) (HEX) (8.900)	93-97	F	4	11502603
	8-N15	5.381	BOLT, R/AXL LWR CONT ARM (M12X1.75X95 10.9) (HEX) (8.900)	98	F (J65)	2	11502603
	8-N15	5.381	BOLT, R/AXL LWR CONT ARM (M12X1.75X105, 26.6 OD) (5.383) (AC-DELCO #22657681)	98-02	F (J65)	4	22657681
	8-N15	5.381	BOLT, R/AXL LWR CONT ARM (M12.1.75X95, 26.6 OD) (AT BRACKET) (6.174)	00-02	F (J65)	2	22657679
15.	8-N17	5.383	WASHER, RR SUSP CONT ARM (FL 3.50X13.2 ID) (0.002)	93-99	F	4	473539
	8-N17	5.383	WASHER, RR SUSP CONT ARM (FL 3.50X13.2 ID) (0.002)	00-02	F	4	473539
16.	8-A9	7.242	BRACKET, RR STAB SHF ROD ..	93-02	F	2	10018209
17.	8-N12	4.665	BOLT, RR BRK CLPR (M12-1.75 X 33.1)	93-02	F (J65)	4	10229606
18.	8-N13	4.667	CALIPER KIT, RR BRK (SEE"BRAKE CALIPER, FRONT" ILLUSTRATION IN GRP. 4.000 FOR DETAILED VIEW.) (4.665) ...	98-02	F (J65)	LH	12455127
	8-N13	4.667	CALIPER KIT, RR BRK (SEE"BRAKE CALIPER, FRONT" ILLUSTRATION IN GRP. 4.000 FOR DETAILED VIEW.) (4.665) ...	98-02	F (J65)	RH	12455128
	8-N13	4.667	CALIPER KIT, RR BRK (1 9/16 CYLINDER BORE) (SEE"BRAKE CALIPER, FRONT" ILLUSTRATION IN GRP. 4.000 FOR DETAILED VIEW.) (AC-DELCO #18H223)	93-97	FP	AR	18031697
		N.S.	CALIPER, RR BRK (SEE"BRAKE CALIPER, FRONT" ILLUSTRATION IN GRP. 4.000 FOR DETAILED VIEW.)	00-02	.....	RH	
		N.S.	CALIPER, RR BRK (SEE"BRAKE CALIPER, FRONT" ILLUSTRATION IN GRP. 4.000 FOR DETAILED VIEW.)	00-02	.....	LH	
19.	8-N12	3.690	BRACKET, CTLTC CONV FRT HNGR (SEE"EXAUST SYSTEM" ILLUSTRATION IN GRP. 3.000 FOR DETAILED VIEW.) (L32/MD8 STAMPED IN PART)	93	F (L32, MD8)	1	10224680
	8-N12	3.690	BRACKET, CTLTC CONV FRT HNGR (SEE"EXAUST SYSTEM" ILLUSTRATION IN GRP. 3.000 FOR DETAILED VIEW.)	94-95	F (L32, M30)	1	10224680

cardiagn.com

	8-N12	3.690	**BRACKET**, CTLTC CONV FRT HNGR (SEE"EXAUST SYSTEM" ILLUSTRATION IN GRP. 3.000 FOR DETAILED VIEW.)	95-97	F (L36, M30)	1	10279303
	8-N12	3.690	**BRACKET**, CTLTC CONV FRT HNGR (SEE"EXAUST SYSTEM" ILLUSTRATION IN GRP. 3.000 FOR DETAILED VIEW.)	96-02	F (L36, M49)	1	10281475
	8-N12	3.690	**BRACKET**, CTLTC CONV FRT HNGR (SEE"EXAUST SYSTEM" ILLUSTRATION IN GRP. 3.000 FOR DETAILED VIEW.)	96-02	F (L36, M30)	1	10280919
	8-N12	3.690	**BRACKET**, CTLTC CONV HNGR (SEE"EXAUST SYSTEM" ILLUSTRATION IN GRP. 3.000 FOR DETAILED VIEW.)	93-95	F (L32, M49)	1	10222075
	8-N12	3.690	**BRACKET**, CTLTC CONV HNGR (SEE"EXAUST SYSTEM" ILLUSTRATION IN GRP. 3.000 FOR DETAILED VIEW.)	93	F (LT1, MD8)	1	10262320
	8-N12	3.690	**BRACKET**, CTLTC CONV HNGR (SEE"EXAUST SYSTEM" ILLUSTRATION IN GRP. 3.000 FOR DETAILED VIEW.)	93	F (LT1, M28, M29)	1	10284835
	8-N12	3.690	**BRACKET**, CTLTC CONV HNGR (SEE"EXAUST SYSTEM" ILLUSTRATION IN GRP. 3.000 FOR DETAILED VIEW.)	94-97	F (LT1, M30)	1	10262320
	8-N12	3.690	**BRACKET**, CTLTC CONV HNGR (SEE"EXAUST SYSTEM" ILLUSTRATION IN GRP. 3.000 FOR DETAILED VIEW.)	94-97	F (LT1, MM6)	1	10284835
	8-N12	3.690	**BRACKET**, CTLTC CONV HNGR (SEE"EXAUST SYSTEM" ILLUSTRATION IN GRP. 3.000 FOR DETAILED VIEW.)	98-02	F (LS1, M30)	1	10270117
	8-N12	3.690	**BRACKET**, CTLTC CONV HNGR (SEE"EXAUST SYSTEM" ILLUSTRATION IN GRP. 3.000 FOR DETAILED VIEW.)	98-02	F (LS1, MM6)	1	10293946
20.		8.929	**WASHER**, SPL STL (15/32 ID X 1 1/8 ODX1/8) (PROP SHF)	93-02	.....	2	3790768
21.		8.917	**NUT**, HEX FLG PREVAILING TORQ (M12X1.75X14) (ZO 10) (R/AXL LWR CONT ARM)	93-02	F	4	11515744
22.	8-N15	5.381	**BUSHING**, R/AXL LWR CONT ARM (PART OF 23)	93-96	F (B4C, FE2, 1LE)	2	10164152
	8-N15	5.381	**BUSHING**, R/AXL LWR CONT ARM (PART OF 23)	97	F (B4C, 1LE, FE2)	2	10164152
	8-N15	5.381	**BUSHING**, R/AXL LWR CONT ARM (PART OF 23)	98	F (B4C, FE2)	2	10164152
	8-N15	5.381	**BUSHING**, R/AXL LWR CONT ARM (PART OF 23)	99	F (B4C, FE7)	2	10164152
	8-N15	5.381	**BUSHING**, R/AXL LWR CONT ARM (PART OF 23)	00-02	F (B4C)	2	10164152
		N.S.	**BUSHING**, R/AXL LWR CONT ARM (PART OF 23)		(FE2) (EXC 1LE)		

cardiagn.com

		N.S.	BUSHING, R/AXL LWR CONT ARM (PART OF 23)		(F41)		
23.	8-N16	5.382	ARM, R/AXL LWR CONT (INCLS 22)	93-97	F (B4C, 1LE, FE2)	2	10164151
	8-N16	5.382	ARM, R/AXL LWR CONT (INCLS 22)	93-02	F (F41)	2	10251391
	8-N16	5.382	ARM, R/AXL LWR CONT (INCLS 22)	93-97	F (FE2) (FXC B4C, 1LE)	2	10251392
	8-N16	5.382	ARM, R/AXL LWR CONT (INCLS 22)	98-99	F (B4C, FE7)	2	10164151
	8-N16	5.382	ARM, R/AXL LWR CONT (INCLS 22)	98-02	F (FE2, FE4) (EXC B4C)	2	10251392
	8-N16	5.382	ARM, R/AXL LWR CONT (INCLS 22)	00-02	F (B4C)	2	10164151
24.	8-A10	7.243	INSULATOR, RR STAB SHF (19.0MM)	93	F (FE2) (EXC 1LE)	2	10224232
	8-A10	7.243	INSULATOR, RR STAB SHF (19.0MM)	93-94	F (F41)	2	10224232
	8-A10	7.243	INSULATOR, RR STAB SHF (21.0MM)	93	F (FE2, 1LE)	2	10235886
	8-A10	7.243	INSULATOR, RR STAB SHF (19.0MM) (PINK PAINT ID)	94	F (FE2) (2ND DES)	2	10224232
	8-A10	7.243	INSULATOR, RR STAB SHF (21.0MM) (NO PAINT ID)	94	F (FE2) (1ST DES)	2	10235886
	8-A10	7.243	INSULATOR, RR STAB SHF (19.0MM)	95	F (FE1)	2	10224232
	8-A10	7.243	INSULATOR, RR STAB SHF (19.0MM)	95-97	F (FE2)	2	10224232
	8-A10	7.243	INSULATOR, RR STAB SHF	95-97	F (F41)	2	10271796
	8-A10	7.243	INSULATOR, RR STAB SHF (19.0MM)	98-99	F (FE2, FE4, FE7)	2	10224232
	8-A10	7.243	INSULATOR, RR STAB SHF	98-02	F (F41)	2	10298581
	8-A10	7.243	INSULATOR, RR STAB SHF (19.0MM)	00-02	F (FE2, FE4)	2	10224232
25.	8-A9	7.242	CLAMP, RR STAB SHF INSL	93-02	F	2	334671
26.		8.917	NUT, HFH, M8X1.25, 17.9 OD, 738 THK, 13MM HEX, 10, ZF (RR STAB SHF INSL CLA) (8.915) (AC-DELCO #11514596)	93-02		4	11514596
27.	8-N25	5.544	SHAFT, PROP (SEE "PROP SHAFT" ILLUSTRATION IN GRP. 5.000 FOR DETAILED VIEW.)	93-95	F (L32)	1	12564000
	8-N25	5.544	SHAFT, PROP (SEE "PROP SHAFT" ILLUSTRATION IN GRP. 5.000 FOR DETAILED VIEW.)	93	F (LT1, MD8) (EXC J1F)	1	12568186
	8-N25	5.544	SHAFT, PROP (SEE "PROP SHAFT" ILLUSTRATION IN GRP. 5.000 FOR DETAILED VIEW.)	93	F (LT1, M28, M29) (EXC J1F)	1	12568188
	8-N25	5.544	SHAFT, PROP (SEE "PROP SHAFT" ILLUSTRATION IN GRP. 5.000 FOR DETAILED VIEW.)	94	F (LT1, MM6) (EXC VG4)	1	12568186
	8-N25	5.544	SHAFT, PROP (SEE "PROP SHAFT" ILLUSTRATION IN GRP. 5.000 FOR DETAILED VIEW.)	94	F (LT1, M30) (EXC J1F)	1	12568188
	8-N25	5.544	SHAFT, PROP (SEE "PROP SHAFT" ILLUSTRATION IN GRP. 5.000 FOR DETAILED VIEW.)	95-97	F (L36) (EXC VE2)	1	12564000

cardiagn.com

8-N25	5.544	SHAFT, PROP (SEE "PROP SHAFT" ILLUSTRATION IN GRP. 5.000 FOR DETAILED VIEW.) ...	95-97	F (LT1, MM6) (EXC VE2)	1	12568188
8-N25	5.544	SHAFT, PROP (SEE "PROP SHAFT" ILLUSTRATION IN GRP. 5.000 FOR DETAILED VIEW.)	95-97	F (LT1, M30) (EXC VE2)	1	12568188
8-N25	5.544	SHAFT, PROP (SEE "PROP SHAFT" ILLUSTRATION IN GRP. 5.000 FOR DETAILED VIEW.)	95-97	F (LT1, M30, VE2)	1	12568188
8-N25	5.544	SHAFT, PROP (SEE "PROP SHAFT" ILLUSTRATION IN GRP. 5.000 FOR DETAILED VIEW.) (1 BLACK STRIPE, 1 BROWN STRIPE) (UNPAINTED)	98-99	F (LS1, MM6, M30) (EXC VE2)	1	12556670
8-N25	5.544	SHAFT, PROP (SEE "PROP SHAFT" ILLUSTRATION IN GRP. 5.000 FOR DETAILED VIEW.) (1 BLACK STRIPE, 1 BROWN STRIPE) (UNPAINTED)	98	F (L36, M30) (EXC VE2)	1	12556670
8-N25	5.544	SHAFT, PROP (SEE "PROP SHAFT" ILLUSTRATION IN GRP. 5.000 FOR DETAILED VIEW.)	98-99	F (LS1, M30, GU5, QLC)	1	12559525
8-N25	5.544	SHAFT, PROP (SEE "PROP SHAFT" ILLUSTRATION IN GRP. 5.000 FOR DETAILED VIEW.)	98	F (L36, M43, VE2)	1	12564000
8-N25	5.544	SHAFT, PROP (SEE "PROP SHAFT" ILLUSTRATION IN GRP. 5.000 FOR DETAILED VIEW.)	98-02	F (LS1, MM6, GU6, QLC)	1	12564004
8-N25	5.544	SHAFT, PROP (SEE "PROP SHAFT" ILLUSTRATION IN GRP. 5.000 FOR DETAILED VIEW.)	98	F (L36, M49, VE2) (2ND DES)	1	12568188
8-N25	5.544	SHAFT, PROP (SEE "PROP SHAFT" ILLUSTRATION IN GRP. 5.000 FOR DETAILED VIEW.) (1 BLACK STRIPE, 1 BROWN STRIPE) (UNPAINTED)	98	F (L36, M30, M49) (EXC VE2)	1	12556670
8-N25	5.544	SHAFT, PROP (SEE "PROP SHAFT" ILLUSTRATION IN GRP. 5.000 FOR DETAILED VIEW.)	00-02	F (L36, M30, M49, QII, VE2)	1	12564000
8-N25	5.544	SHAFT, PROP (SEE "PROP SHAFT" ILLUSTRATION IN GRP. 5.000 FOR DETAILED VIEW.)	00	F (LS1, M30, GU5, QLC)	1	12564003
8-N25	5.544	SHAFT, PROP (SEE "PROP SHAFT" ILLUSTRATION IN GRP. 5.000 FOR DETAILED VIEW.)	00-02	F (LS1, MM6, M30) (EXC VE2)	1	12568187
8-N25	5.544	SHAFT, PROP (SEE "PROP SHAFT" ILLUSTRATION IN GRP. 5.000 FOR DETAILED VIEW.)	00-02	F (L36, M30, M49) (EXC VE2)	1	12568187
8-N25	5.544	SHAFT, PROP (SEE "PROP SHAFT" ILLUSTRATION IN GRP. 5.000 FOR DETAILED VIEW.)	98-01	F (LS1, MM6, M30, VE2)	1	12568188
8-N25	5.544	SHAFT, PROP (SEE "PROP SHAFT" ILLUSTRATION IN GRP. 5.000 FOR DETAILED VIEW.)	00-02	F (LS1, M30, GU2, QLC, VE2)	1	12568188
8-N25	5.544	SHAFT, PROP (SEE "PROP SHAFT" ILLUSTRATION IN GRP. 5.000 FOR DETAILED VIEW.)	01-02	F (LS1, M30, GU5, QLC)	1	12564004

cardiagn.com

	8-N25	5.544	SHAFT, PROP (SEE "PROP SHAFT" ILLUSTRATION IN GRP. 5.000 FOR DETAILED VIEW.)	00-02	F (L36, M30, M49, VE2)	1	12568188
	8-N25	5.544	SHAFT, PROP (SEE "PROP SHAFT" ILLUSTRATION IN GRP. 5.000 FOR DETAILED VIEW.)	93	F (LT1, MD8, J1F) (EXPORT)	1	12568188
	8-N25	5.544	SHAFT, PROP (SEE "PROP SHAFT" ILLUSTRATION IN GRP. 5.000 FOR DETAILED VIEW.)	93	F (LT1, M28, M29, J1F) (EXPORT)	1	26041129
	8-N25	5.544	SHAFT, PROP (SEE "PROP SHAFT" ILLUSTRATION IN GRP. 5.000 FOR DETAILED VIEW.)	94	F (LT1, M30, J1F) (EXPORT)	1	12568188
	8-N25	5.544	SHAFT, PROP (SEE "PROP SHAFT" ILLUSTRATION IN GRP. 5.000 FOR DETAILED VIEW.)	97	F (LT1, MM6, VE2) (EXPORT)	1	12568188
	8-N25	5.544	SHAFT, PROP (SEE "PROP SHAFT" ILLUSTRATION IN GRP. 5.000 FOR DETAILED VIEW.)	98	F (L36, M30, M49, QII, VE2) (EXPORT)	1	12564000
	8-N25	5.544	SHAFT, PROP (SEE "PROP SHAFT" ILLUSTRATION IN GRP. 5.000 FOR DETAILED VIEW.)	99	F (L36, M30, M49, VE2) (EXPORT)	1	12568188
	8-N25	5.544	SHAFT, PROP (FOR 1ST DESIGN SEE 12564000) (SEE "PROP SHAFT" ILLUSTRATION IN GRP. 5.000 FOR DETAILED VIEW.) (ONE PIECE)	98	F (L36, M30, VE2) (2ND DES) (EXPORT)	1	12568188
	8-N25	5.544	SHAFT, PROP (FOR 2ND DESIGN SEE 12568188) (SEE "PROP SHAFT" ILLUSTRATION IN GRP. 5.000 FOR DETAILED VIEW.) (W/TWO PIECE)	98	F (L36, M30, VE2) (1ST DES) (EXPORT)	1	12564000
28.	8-N27	5.586	RETAINER, PROP SHF (1 13/16 IN HOLE CNTR) (USED W/1 1/8 IN BRG CAP, CUT-OFF CORNERS)	93-94	F (L32, LT1)	2	7846740
	8-N27	5.586	RETAINER, PROP SHF (1 13/16 IN HOLE CNTR) (USED W/1 1/8 IN BRG CAP, CUT-OFF CORNERS)	95	F (L32, LT1, L36)	2	7846740
	8-N27	5.586	RETAINER, PROP SHF (1 13/16 IN HOLE CNTR) (USED W/1 1/8 IN BRG CAP, CUT-OFF CORNERS)	96-97	F (LT1, L36)	2	7846740
	8-N27	5.586	RETAINER, PROP SHF (1 13/16 IN HOLE CNTR) (USED W/1 1/8 IN BRG CAP, CUT-OFF CORNERS)	98-02	F (LS1, L36)	2	7846740
29.	8-N27	5.586	BOLT, PROP SHF (& UJT STRAP) (5/16-24 X 1 11/32, HEX)	93-97	F (LT1)	4	14018700
	8-N27	5.586	BOLT, PROP SHF (& UJT STRAP) (5/16-24 X 1 11/32, HEX)	93-95	F	4	14018700
	8-N27	5.586	BOLT, PROP SHF (& UJT STRAP) (5/16-24 X 1 11/32, HEX)	95-02	F (L36)	4	14018700
	8-N27	5.586	BOLT, PROP SHF (& UJT STRAP) (5/16-24 X 1 11/32, HEX)	98-02	F (LS1)	4	14018700
30.	8-A8	7.241	SHAFT, RR STAB	93-97	F (F41)	1	10018212
	8-A8	7.241	SHAFT, RR STAB	93	F (FE2) (EXC 1LE)	1	10164174
	8-A8	7.241	SHAFT, RR STAB	94-97	F (FE2)	1	10164174

cardiagn.com

	8-A8	7.241	SHAFT, RR STAB	98-99	F (FE2, FE4, FE7)	1	10164174
	8-A8	7.241	SHAFT, RR STAB	98-02	F (F41)	1	10298580
	8-A8	7.241	SHAFT, RR STAB	00-02	F (FE2, FE4)	1	10164174
	8-A8	7.241	SHAFT, RR STAB (21MM)	93	F (FE2, 1LE)	1	10021221
	8-A8	7.241	SHAFT, RR STAB (21MM) (NO PAINT ID)	94	F (FE2) (1ST DES)	1	10021221
31.	8-N17	5.383	BOLT, R/AXL TORQ ARM (HEX W/RED BDY M14X2X185 10.9) (8.900)	93-02	F	2	11505878
	8-N17	5.383	BOLT, R/AXL TORQ ARM (INR (M10X1.50X80) (4.085)	93	F (M28, M29, M49)	1	10024718
	8-N17	5.383	BOLT, R/AXL TORQ ARM (INR (M10X1.50X80) (4.085)	94	F (MM6, M49)	1	10024718
32.	8-N17	5.383	WASHER, R/AXL TORQ ARM (15OD X 1ID X .03 THK) (5.394)	93-02	F	4	10053765
33.	8-N17	5.383	NUT, R/AXL TORQ ARM (M14X2X13) (HEX) (8.917)	93-95	F	2	11516074
	8-N17	5.383	NUT, R/AXL TORQ ARM (M14X2X11.92) (HEX W/CONICAL WA PREV TORQ)	96-02	F	2	3537773
34.	8-N16	5.382	ARM, R/AXL TORQ	93	F (LT1, MD8)	1	10034255
	8-N16	5.382	ARM, R/AXL TORQ (IF USE IN PLC OF 10239140, 2-3MM WASHERS NOT REQ AT PROP SHFT ATCH)	93	F (LT1, M28, M29)	1	10261946
	8-N16	5.382	ARM, R/AXL TORQ (IF USE IN PLC OF 10239140, 2-3MM WASHERS NOT REQ AT PROP SHFT ATCH)	93-94	F (L32)	1	10261946
	8-N16	5.382	ARM, R/AXL TORQ	94-97	F (LT1, M30)	1	10034255
	8-N16	5.382	ARM, R/AXL TORQ	94-97	F (LT1, MM6)	1	10261946
	8-N16	5.382	ARM, R/AXL TORQ	95	F (L32, L36)	1	10261946
	8-N16	5.382	ARM, R/AXL TORQ	96-97	F (L36)	1	10261946
	8-N16	5.382	ARM, R/AXL TORQ	98	F (LS1, M30)	1	10034255
	8-N16	5.382	ARM, R/AXL TORQ (W/ONE PIECE PROP)	98	F (L36, M30) (2ND DES)	1	10034255
	8-N16	5.382	ARM, R/AXL TORQ (W/TWO PIECE PROP)	98	F (L36, M30) (1ST DES)	1	10261946
	8-N16	5.382	ARM, R/AXL TORQ	98	F (L36, M49)	1	10261946
	8-N16	5.382	ARM, R/AXL TORQ	98-02	F (LS1, MM6)	1	10413903
	8-N16	5.382	ARM, R/AXL TORQ	99-02	F (LS1, M30) (EXC VE2)	1	10034255
	8-N16	5.382	ARM, R/AXL TORQ	99-02	F (L36) (EXC VE2)	1	10034255
	8-N16	5.382	ARM, R/AXL TORQ	99-02	F (L36, QII)	1	10261946
35.	8-N15	5.380	BRACKET, R/AXL TORQ ARM OTR	93	F (M28, M29, M49)	1	10252375
	8-N15	5.380	BRACKET, R/AXL TORQ ARM OTR	94-02	F (MM6, M49)	1	10252375
	8-N15	5.380	BRACKET, R/AXL TORQ ARM OTR	98-02	F (M30)	1	10269129
	8-N15	5.380	BRACKET, R/AXL TORQ ARM OTR (W/INSL)	94-97	F (M30)	1	10034174
36.		8.931	WASHER, LK #10X18.3OD (R/AXL TORQ ARM OTR BRKT)	93-02		1	11500046
37.		8.900	BOLT, HEX M10X1.5X30 10.9 PC (R/AXL TORQ ARM OTR BRKT)	93-02		1	11500930
38.		DISCON	BOLT, R/AXL TORQ ARM INR BRKT (5.383)	94-97	F (M30)	1	10024719

cardiagn.com

	8-N15	5.380	BOLT, R/AXL TORQ ARM INR BRKT (M10X1.5X130) (8.900)	94-02	F (M30)	10	11508489
	8-N15	5.380	BOLT, R/AXL TORQ ARM INR BRKT (M10X1.5X115, 9.8) (SPEC HEX HD) (1.060)	97	F (M30)	1	14088953
	8-N15	5.380	BOLT, R/AXL TORQ ARM INR BRKT (M10X1.5X8.0) (8.900)	93	F (M28, M29, M49)	1	11504745
	8-N15	5.380	BOLT, R/AXL TORQ ARM INR BRKT (M10X1.5X8.0) (8.900)	94-02	F (MM6, M49)	1	11504745
39.	8-N15	5.380	BRACKET, R/AXL TORQ ARM INR (INCLS 40)	93	F (M28, M29, M49)	1	10252374
	8-N15	5.380	BRACKET, R/AXL TORQ ARM INR (INCLS 40) (W/INSL)	94-97	F (M30)	1	10034176
	8-N15	5.380	BRACKET, R/AXL TORQ ARM INR (INCLS 40)	94-02	F (MM6, M49)	1	10252374
	8-N15	5.380	BRACKET, R/AXL TORQ ARM INR (INCLS 40)	98-02	F (M30)	1	10269131
40.		DISCON	BOLT, R/AXL TORQ ARM INR BRKT (PART OF 39) (5.383)	94-97	F (M30)	1	10024719
	8-N15	5.380	BOLT, R/AXL TORQ ARM INR BRKT (PART OF 39) (M10X1.5X130) (8.900)	94-02	F (M30)	10	11508489
	8-N15	5.380	BOLT, R/AXL TORQ ARM INR BRKT (PART OF 39) (M10X1.5X115, 9.8) (SPEC HEX HD) (1.060)	97	F (M30)	1	14088953
	8-N15	5.380	BOLT, R/AXL TORQ ARM INR BRKT (M10X1.5X8.0) (PART OF 39) (8.900)	93	F (M28, M29, M49)	1	11504745
	8-N15	5.380	BOLT, R/AXL TORQ ARM INR BRKT (M10X1.5X8.0) (PART OF 39) (8.900)	94-02	F (MM6, M49)	1	11504745
41.	8-A26	7.580	NUT, R/AXL TORQ ARM BRKT (M10X1.5 FLANGED HEX HEAD) (8.917)	93-99	F	2	10255857
	8-A26	7.580	NUT, R/AXL TORQ ARM BRKT (M10X1.5X10 W/WASHER) (8.917)	00-02	F (M30)	1	11516781
	8-A26	7.580	NUT, R/AXL TORQ ARM BRKT (M10X1.5, 11.7) (8.917)	01-02	F (M30, MM6, M49)	2	11516077
42.		8.900	BOLT, HFH-M8X1.25X20 (R/AXL TORQ ARM OTR BRKT)	93-02	F	2	11516186
43.	8-N15	5.380	BOLT, R/AXL TORQ ARM INR BRKT (M10X1.5X115, 9.8) (SPEC HEX HD) (1.060)	93	F (MD8)	1	14088953
		8.900	BOLT, HFH, M10X1.5X60, 9.8, PHOS, 38.5 THD (R/AXL TORQ ARM INR BRKT)	93-02	F	1	11504745
44.	8-N15	5.380	BRACKET, R/AXL TORQ ARM OTR	93	F (MD8)	1	10034174
	8-N15	5.380	BRACKET, R/AXL TORQ ARM OTR	98-02	F (M30)	1	10269129
	8-N15	5.380	BRACKET, R/AXL TORQ ARM OTR (W/INSL)	94-97	F (M30)	1	10034174
45.		8.900	BOLT, HFH, M10X1.5X80, 9.8, PHOS, 38.5 THD (PART OF 46) ..	93-02	F	1	11504745
46.	8-N15	5.380	BRACKET, R/AXL TORQ ARM INR (INCLS 45) (W/INSL)	93	F (MD8)	1	10034176

cardiagn.com

	8-N15	5.380	BRACKET, R/AXL TORQ ARM INR (INCLS 45) (W/INSL)	94-97	F (M30)	1	10034176
	8-N15	5.380	BRACKET, R/AXL TORQ ARM INR (INCLS 45)	98-02	F (M30)	1	10269131
47.		8.000	BOLT, HFH M10X1.5X130 9.8 PZOR (M10X1.5X130)	93-02	F	1	11508489
48.		8.900	BOLT, M10 X 1.5 X 20 (PROP SHF)	93-94	(L32)	2	11508250
	8-N27	5.586	BOLT, PROP SHF (PROP SHF) (M10X1.5X25) (3.740)	95-02		2	11515510
49.	8-A9	7.242	BOLT, RR STAB SHF (M8 X 1.25X 180MM) (*KIT1) (7.240)	93-02	F	1	10018984
50.		8.929	WASHER, FL M9.1X31.5X3.1 1010 ZC (RR STAB SHF LINK) (*KIT1) (AC-DELCO #10029761)	93-02		8	10029761
51.	8-A10	7.243	INSULATOR, RR STAB SHF (NATURAL) (70 DURO) (*KIT1)	93-02	F (F41)	8	10198370
	8-A10	7.243	INSULATOR, RR STAB SHF (*KIT1)	93-02	F (FE2)	8	10221801
52.		N.S.	SPACER, RR STAB SHF (*KIT1)				
53.	8-A9	7.242	BRACKET, RR STAB SHF	93-02	F	RH	10031386
	8-A9	7.242	BRACKET, RR STAB SHF	93-02	F	LH	10031387
54.		8.977	BOLT, HWH TAP M10X1.5X32 TR PT POR (RR STAB SHF LINK)	93-02		4	11515218
55.	8-A9	7.242	NUT, RR STAB SHF (8X1.25, 7.32, 31.5) (*KIT1) (7.240)	93-02	F	2	15571396
56.	8-A11	7.345	ABSORBER, RR SHK	93-97	F (FE2) (EXC 1LE)	2	22182502
	8-A11	7.345	ABSORBER, RR SHK	93	F (F41)	2	22182502
	8-A11	7.345	ABSORBER, RR SHK (AC-DELCO #540-17)	93-95	F (1LE)	2	22182505
	8-A11	7.345	ABSORBER, RR SHK (AC-DELCO #520-177)	93-00	F	2	88946022
	8-A11	7.345	ABSORBER, RR SHK (AC-DELCO #530-10)	93-00	FP	2	88945178
	8-A11	7.345	ABSORBER, RR SHK	94-97	F67 (F41)	2	22182502
	8-A11	7.345	ABSORBER, RR SHK	94-97	F87 (F41)	2	22182502
	8-A11	7.345	ABSORBER, RR SHK (SOLD IN PACKS OF TWO)	96-97	F (1LE)	1	22140228
	8-A11	7.345	ABSORBER, RR SHK (SOLD IN PACKS OF TWO)	98-99	F (FE7)	2	22140228
	8-A11	7.345	ABSORBER, RR SHK	98-00	F (F41)	2	22182502
	8-A11	7.345	ABSORBER, RR SHK (AC-DELCO #540-17)	98	F (FE4)	2	22182505
	8-A11	7.345	ABSORBER, RR SHK	98-02	F67 (FE2)	2	22182502
	8-A11	7.345	ABSORBER, RR SHK	98-00	F87 (FE2)	2	22182502
	8-A11	7.345	ABSORBER, RR SHK	99	F67 (FE4)	2	22182502
	8-A11	7.345	ABSORBER, RR SHK (AC-DELCO #540-17)	99	F87 (FE4)	2	22182505
	8-A11	7.345	ABSORBER, RR SHK	00	F (FE4)	2	22182502
	8-A11	7.345	ABSORBER, RR SHK	01-02	F (FE4)	2	10443949
	8-A11	7.345	ABSORBER, RR SHK	01-02	F (F41)	2	10443949
	8-A11	7.345	ABSORBER, RR SHK	01-02	F87 (FE2)	2	10443949
	8-A11	7.345	ABSORBER, RR SHK	01-02	F	1	10443949
57.	8-A13	7.389	RETAINER, RR S/ABS UPR INSL	93-02	F	4	14071397
	8-A13	7.389	RETAINER, RR S/ABS UPR INSL	96-99	F87 (1LE)	AR	22166910
58.	8-A13	7.388	INSULATOR, RR S/ABS LWR (AC-DELCO #10009135)	93-96	F	2	10009135

cardiagn.com

	8-A13	7.388	**INSULATOR**, RR S/ABS LWR (AC-DELCO #10009135)	97-99	F (EXC 1LE)	2	10009135
	8-A13	7.388	**INSULATOR**, RR S/ABS LWR (AC-DELCO #10009135)	00-02	F	2	10009135
59.	8-A13	7.388	**INSULATOR**, RR S/ABS UPR (AC-DELCO #10022353)	93-02	F	2	10022353
	8-A13	7.388	**INSULATOR**, RR S/ABS UPR (AC-DELCO #22166909)	96-99	F87 (1LE)	AR	22166909
60.		8.915	**NUT**, M10X1.5 15MM SOCKET (RR S/ABS)	93-02	.....	2	11514603
61.	8-N14	5.001	**DAMPENER**, RR BRK VIB	93-97	F (J65)	2	10224765
		N.S.	**DAMPENER**, RR BRK VIB	98-02	.....		
62.		8.915	**NUT**, HFH, 10X1.5 6H THD, 21.3 OD, 9.8 THK 13 HEX DR, GRD 9, ZF (RR BRK VIB DPNR) (8.917) ..	93-02	(J65)	2	10255857
63.	8-A12	7.347	**WASHER**, RR S/ABS (WASHER POSITIONED IN FRONT OF AXLE ON 1993 & EARLY 1994 MODELS.) (15OD X 1ID X .03 THK) (5.394)	93-94	F	2	10053765
	8-N17	5.383	**WASHER**, R/AXL TORQ ARM (WASHER POSITIONED IN FRONT OF AXLE ON 1993 & EARLY 1994 MODELS.) (15OD X 1ID X .03 THK) (5.394)	95-02	F	2	10053765
64.		8.917	**NUT**, M10X1.5X9, 7111M (USED ONLY ON VEHICLES WITH L36 ENGINE)	93-02	F	1	11516072
65.	8-N24	5.395	**DAMPENER**, R/AXL TORQ ARM VIB (USED ONLY ON VEHICLES WITH L36 ENGINE)	95-97	F (L36)	1	10261947
	8-N24	5.395	**DAMPENER**, R/AXL TORQ ARM VIB (USED ONLY ON VEHICLES WITH L36 ENGINE)	98	F (L36, M49)	1	10261947
		N.S.	**DAMPENER**, R/AXL TORQ ARM VIB (USED ONLY ON VEHICLES WITH L36 ENGINE)	93-94	.....		
	8-N24	5.395	**DAMPENER**, R/AXL TORQ ARM VIB (USED ONLY ON VEHICLES WITH L36 ENGINE)	99-02	F (L36, QII) (EXPORT) .	1	10261947
66.	8-N24	5.395	**WASHER**, R/AXL VIB DPNR (USED ONLY ON VEHICLES WITH L36 ENGINE) (1.80-2.10MM) (10.571)	95-02	F (L36)	AR	20432548
		N.S.	**WASHER**, R/AXL VIB DPNR (USED ONLY ON VEHICLES WITH L36 ENGINE)	93-94	.....		
67.		8.900	**BOLT**, M10X1.5X60 (USED ONLY ON VEHICLES WITH L36 ENGINE)	93-02	F	1	11509265

SERVICE KITS

1.	8-A8	7.240	**LINK**, RR STAB SHF (INCLS 49-52, 55)	93-02	F	2	10164176
	8-A8	7.240	**LINK**, RR STAB SHF (INCLS 49-52, 55)	93-97	F (FE2)	2	10221779

cardiagn.com

8–A8	7.240	LINK, RR STAB SHF (INCLS 49–52, 55)	96–99	F (FE2, FE4, FE7)	2	10221779
8–A8	7.240	LINK, RR STAB SHF (INCLS 49–52, 55)	00–02	F (FE2, FE4)	2	10221779

RPO DEFINITIONS

B4C – PACKAGE SPECIAL SERVICE
FE1 – SUSPENSION SYSTEM,SOFT RIDE
FE2 – SUSPENSION SYSTEM,RIDE AND HANDLING
FE4 – SUSPENSION SYSTEM SPECIAL RIDE & HANDLING
FE7 – SUSPENSION SYSTEM,FRONT AND REAR,HEAVY DUTY
F41 – SUSPENSION,FIRM RIDE HANDLING,FRONT AND REAR
GU2 – AXLE,REAR,2.73 RATIO
GU5 – AXLE,REAR,3.23 RATIO
GU6 – AXLE,REAR,3.42 RATIO
G80 – AXLE,REAR,POSITRACTION,LIMITED SLIP
J1F – BRAKE,SPECIAL(EXPORT)
J41 – BRAKE SYSTEM,POWER,FRONT DISC,REAR DRUM(CAST IRON)
J65 – BRAKE SYSTEM,POWER,FRONT AND REAR DISC
LS1 – ENGINE GAS, 8 CYL, 5.7L, SFI, ALUMINUM ENGINE
LT1 – ENGINE--GAS, 8 CYL, 5.7L(5.7P),MFI,HO
L32 – ENGINE,3.4L,V6,(3.4S),SFI,OHV
L36 – ENGINE GAS, 6 CYL, 3.8K, MFI, V6, HO (ERV6 SERIES)
MD8 – TRANSMISSION,AUTOMATIC 4–SPEED(THM700R4/4L60)
MM6 – TRANSMISSION MAN 6 SPD, BORG WARNER, 85MM, 1ST 2.66, 6TH 0.50, O/D
M28 – TRANSMISSION MAN, 6 SPD, BORG WARNER, 85MM, 3.36 1ST, 1.35 3RD
M29 – TRANSMISSION MAN, 6 SPD, BORG WARNER, 85MM, 2.97 1ST, 1.44 3RD
M30 – TRANSMISSION,AUTOMATIC 4 SPEED,4L60E,ELECTRONIC
M49 – TRANSMISSION MAN 5 SPD, BORG WARNER, 77MM, 3.75 1ST, .76 5TH, O/D
NW9 – TRACTION CONTROL ELECTRONIC
QII – TIRE ALL P215/60R16 BW R/PE ST TL AL3 94H
QLC – TIRE,ALL P245/50ZR16/N BL R/PE ST TL HWY
VE2 – PROTECTOR SOURCE APPLIED
VG4 – PROTECTOR UNDERVEHICLE COMPOUND, CORROSION PREVENTIVE, WATER BASED, BLACK
WU8 – SALES PACKAGE Z28 SS UPFITTER
Y03 – 7.625 DIAMETER RING GEAR,SAGINAW REAR AXLE
1LE – PERFORMANCE PACKAGE COMPONENTS

cardiagn.com

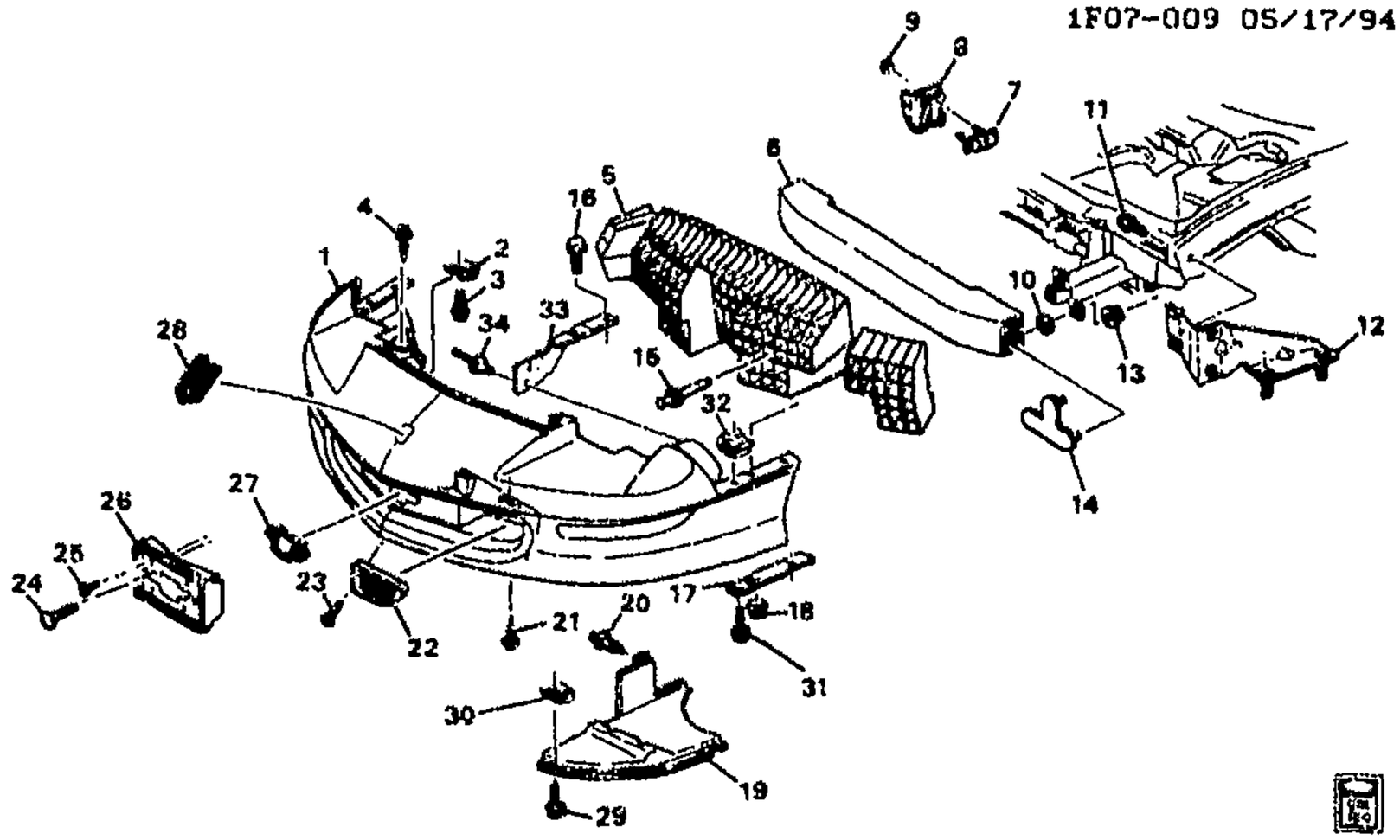

1F07-000

1993-1997 F BUMPER/FRONT

1.	8-A27	7.831	FASCIA, FRT BPR (IF ORDERING FOR RS CAMARO, Y3F, MUST ALSO ORDER TEMPLATE 12530096) (PAINT TO MATCH) ...	93-97	F	1	10248139
2.	8-N4	2.726	NUT, HDLP HSG PNL (1.272)	93-97	F	4	10041588
3.		8.977	SCREW, HWH, M4.2X1.41X20, 9.2OD, 13.8 THD (HDLP HSG PNL)	93-97	.....	4	22536997
		8.929	WASHER, FLAT 5MM PEOR (HDLP HSG PNL)	93-97	.....	4	11503426
4.	8-A27	7.831	RETAINER, FRT BPR FASCIA (PUSH IN) (22.5MM LG) (1.269) ..	93-97	F	7	5973400
5.	8-B2	7.840	ABSORBER, FRT BPR FASCIA ENGY (AC-DELCO #16514311) .	93-97	F	1	16514311
6.	8-A27	7.831	BAR, FRT BPR IMP	93-97	F	1	10255048
7.	8-A8	7.068	PLATE, FRT TOW HOOK MT	93-97	F (V76) (EXPORT)	2	10213599
8.	8-A8	7.068	HOOK, FRT TOW	93-97	F (V76) (EXPORT)	1	10191866
9.		8.915	NUT, HFH, 10X1.5 6H THD, 21.3 OD, 9.8 THK 13 HEX DR, GRD 9, ZF (FRT TOW HOOK REINF) (8.917)	93-97	.....	4	10255857
10.		8.921	NUT, METRIC PUSH-ON BOLT RETAINING SPRING (FRT BPR IMP BAR STUD PLT (PUSH ON)) .	93-97	.....	4	10009923
11.		8.900	BOLT, (FRT BPR FASCIA OTR BRKT)	93-97	F	2	20351035
12.	8-A27	7.831	BRACKET, FRT BPR FASCIA OTR	93-97	F	RH	10182012
	8-A27	7.831	BRACKET, FRT BPR FASCIA OTR	93-97	F	LH	10182013

cardiagn.com

13.		8.915	**NUT**, HEX W/CON WA M8X1.25X9.5 19-OD 9 ZP (FRT BPR IMP BAR) (8.917)	93-97		6	11506117
14.	8-A28	7.836	**PLATE**, FRT BPR IMP BAR ANC	93-97	F	2	10166720
15.	8-B2	7.840	**RIVET**, FRT BPR FASCIA ENGY ABS	93-97	F	10	9441955
16.		8.977	**SCREW**, M4.2-1.41X20 PN HD&WA ASM PH (F/FDR)	93-97		2	11502701
17.	8-A28	7.833	**SUPPORT**, FRT BPR FASCIA LWR (7.831)	93-97	F	RH	10233029
	8-A28	7.833	**SUPPORT**, FRT BPR FASCIA LWR (7.831)	93-97	F	LH	10233030
18.		8.917	**NUT**, HEX W/CON WA 6X1X5.5 16-OD ZP 9 (FRT BPR FASCIA LWR SUPT)	93-97		4	11517293
19.	8-A28	7.833	**DEFLECTOR**, F/END FASCIA OTR	93-97	F	RH	10297290
	8-A28	7.833	**DEFLECTOR**, F/END FASCIA OTR	93-97	F	LH	10297291
20.	8-A28	7.833	**RETAINER**, FRT BPR FASCIA LWR DFL (USED ON 1993 MODELS ONLY) (2.483)	93		2	14101262
21.	8-A27	7.831	**RETAINER**, FRT BPR FASCIA (PUSH IN) (28.2MM LG)	93-97	F	3	22542705
22.	8-N4	2.722	**COVER**, FRT FOG LP OPG (2.728)	93-97	F (EXC T96)	RH	10182056
	8-N4	2.722	**COVER**, FRT FOG LP OPG (2.728)	93-97	F (EXC T96)	LH	10182057
23.		8.977	**SCREW**, M4.2X1.41X16 OV CSK TR HD C/R TAP, PEOR (FRT FOG LP OPG CVR) (16.650)	93-97		4	11503446
24.		8.913	**SCREW**, PAN HD, M6.3X1.81X30, TORX, 6010M, AB PNT, 22 THD, TAPPING (FRT LIC PLT)	93-97	F	AR	11508919
25.		8.977	**SCREW**, TRUSS HD SLOTTED TAP M6.3X1.81X 16 SS BLK (FRT LIC)	93-97		4	11505162
26.	8-A26	7.800	**BRACKET**, FRT LIC PLT	93-97	F (VK3) (EXC VL4)	1	10138809
	8-A26	7.800	**BRACKET**, FRT LIC PLT	93-97	F (VL4) (EXPORT)	1	10182060
27.	8-M15	1.303	**EMBLEM**, RAD GRL	93-96	F	1	10166783
	8-M15	1.303	**EMBLEM**, RAD GRL	97	F (EXC Z4C)	1	10166783
	8-M15	1.303	**EMBLEM**, RAD GRL (RED EMBLEM ON WHITE BACKGROUND)	97	F (Z4C)	1	10290781
28.	8-A28	7.832	**EMBLEM**, FRT BPR FASCIA	93	F (EXC B5A)	1	10193494
	8-A28	7.832	**EMBLEM**, FRT BPR FASCIA	93	F (B5A)	1	10230114
	8-A28	7.832	**EMBLEM**, FRT BPR FASCIA	94-97	F	1	10193494
29.		8.977	**SCREW**, 6.3X1.81X20 (FRT BPR FASCIA LWR DFL)	93-97		8	11509051
30.		8.921	**NUT-U SHAPE (M6X1**, 1060 PEOR) MULIT-THREAD SPRING (FRT BPR FASCIA)	93-97	F	8	11518121
31.		8.900	**SCREW**, M6X1X30 (FRT BPR FASCIA LWR SUPT)	93-97		2	11505209
32.		8.921	**NUT-U SHAPE (M6X1**, 1060 PEOR) MULIT-THREAD SPRING (F/FDR)	93-97		2	11518121

cardiaopn.com

33.	8–A26	7.833	**BRACKET**, FRT BPR FASCIA (ATCH TO RAD SUPT) (APPEARANCE OF PART MAY DIFFER, BUT NEW PART WILL REPLACE OLD)	93–97	F	RH	10264035
	8–A26	7.833	**BRACKET**, FRT BPR FASCIA (ATCH TO RAD SUPT) (APPEARANCE OF PART MAY DIFFER, BUT NEW PART WILL REPLACE OLD)	93–97	F	LH	10264036
34.		N.S.	**RIVET**, FRT BPR FASCIA BR		.....		

RPO DEFINITIONS
B5A – PACKAGE – "INDY COUPE"
T96 – LAMP,FRONT FOG
VK3 – LICENSE PLATE,FRONT MOUNTING PACKAGE
VL4 – LICENSE PLATE,FRONT MOUNTING PACKAGE(EXPORT)
V76 – HOOK,FRONT TOW
Z4C – APPEARANCE PACKAGE 30TH ANNIVERSARY

cardiagn.com

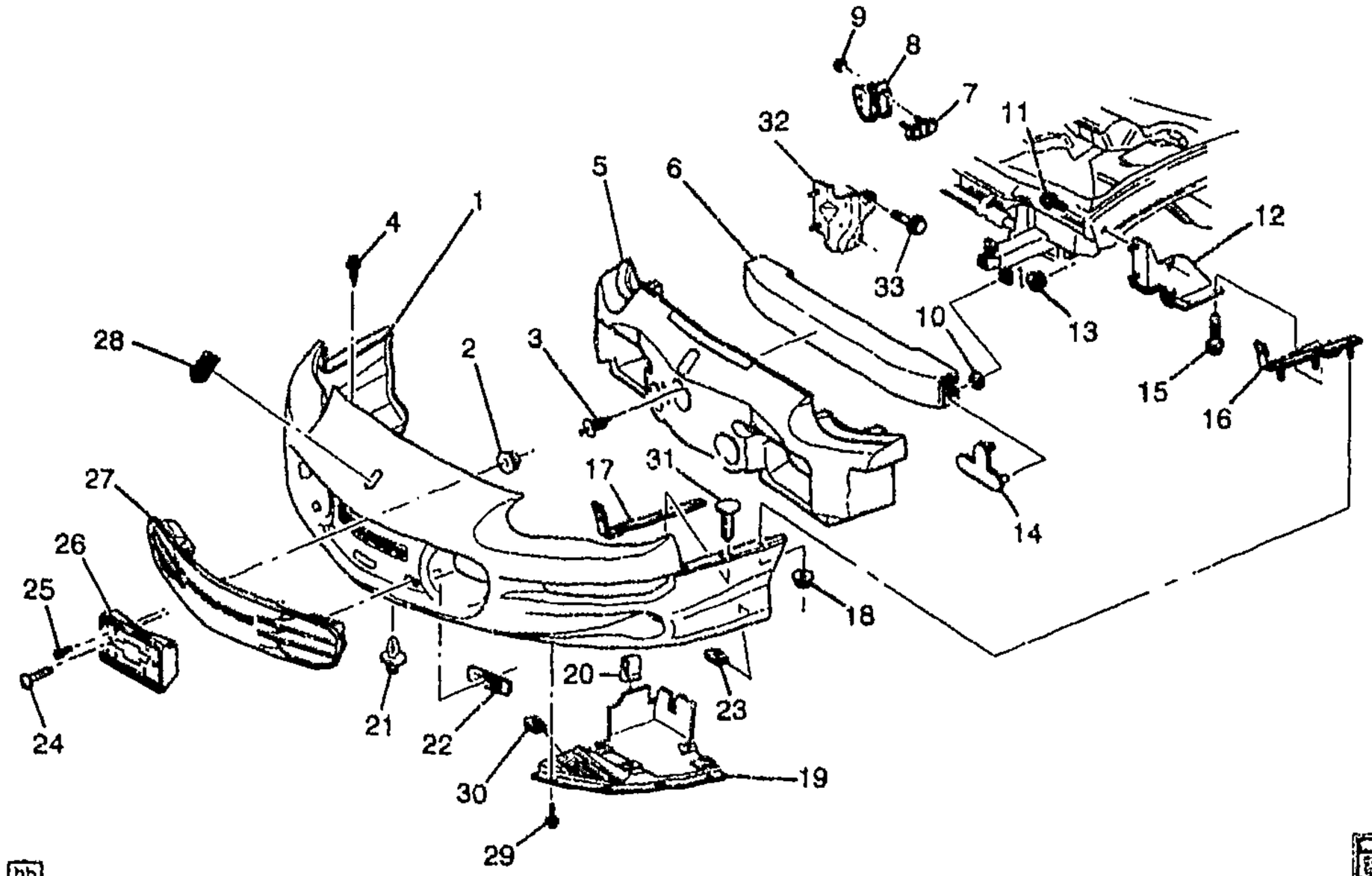

1998-2002 F BUMPER/FRONT

1.	8-A27	7.831	FASCIA, FRT BPR (PAINT TO MATCH)	98-02	F	1	10272188
2.	8-M15	1.269	NUT, RAD GRL (NUT, HWH THREAD FORMING) (M6.3X1.81) (7.831)	98-02	F	3	22516030
3.	8-B2	7.840	RETAINER, FRT BPR FASCIA ENGY ABS (PUSH IN)	98-02	F	5	21077131
4.	8-A27	7.831	RETAINER, FRT BPR FASCIA (PUSH IN) (22.5MM LG) (1.269)	98-02	F	5	5973400
5.	8-B2	7.840	ABSORBER, FRT BPR FASCIA ENGY (AC-DELCO #10272196)	98-02	F	1	10272196
6.	8-A27	7.831	BAR, FRT BPR IMP	98-02	F	1	10272185
7.	8-A8	7.068	PLATE, FRT TOW HOOK MT	98-02	F (V76)	2	10213599
8.	8-A8	7.068	HOOK, FRT TOW	98-02	F (V76)	1	10191866
9.		8.915	NUT, HFH, 10X1.5 6H THD, 21.3 OD, 9.8 THK 13 HEX DR, GRD 9, ZF (FRT TOW HOOK REINF) (8.917)	98-02		4	10255857
10.		8.921	NUT, METRIC PUSH-ON BOLT RETAINING SPRING (FRT BPR IMP BAR STUD PLT (PUSH ON))	98-02		4	10009923
11.		8.900	BOLT, HEX W/CON WA, M6X1X20 (OUTER)	98-02	F	4	11514623
12.	8-N4	2.726	SUPPORT, HDLP	98-02	F	RH	10414795
	8-N4	2.726	SUPPORT, HDLP	98-02	F	LH	10414796

cardiagn.com

13.		8.915	**NUT**, HEX W/CON WA M8X1.25X9.5 19–OD 9 ZP (FRT BPR IMP BAR) (8.917)	98–02		6	11506117
14.	8–A28	7.836	**PLATE**, FRT BPR IMP BAR ANC	98–02	F	2	10166720
15.		8.900	**BOLT ASM**, HEX W/CON WA, M6X1X25, 17 OD, FULL THD, AC PT, 9.8, CD CHROMATE BLK (F/FDR LWR BODY MT PLT)	98–02		4	11509363
16.	8–C12	8.141	**PLATE**, F/FDR LWR BODY MT	98–02	F	RH	10409246
	8–C12	8.141	**PLATE**, F/FDR LWR BODY MT	98–02	F	LH	10409247
17.	8–B2	7.869	**BRACKET**, FRT BPR FASCIA	98–02	F	RH	10277023
	8–B2	7.869	**BRACKET**, FRT BPR FASCIA	98–02	F	LH	10277024
18.		8.917	**NUT**, HEX W/CON WA 6X1X5.5 16–OD ZP 9 (FRT BPR FASCIA LWR SUPT)	98–02		6	11517293
19.	8–A28	7.833	**DEFLECTOR**, F/END FASCIA OTR (INCLS 20)	98–02	F	RH	10297290
	8–A28	7.833	**DEFLECTOR**, F/END FASCIA OTR (INCLS 20)	98–02	F	LH	10297291
20.		N.S.	**S–CLIP** (PART OF 19)	98–02			
21.	8–A27	7.831	**RETAINER**, FRT BPR FASCIA (PUSH IN) (28.2MM LG)	98–02	F	3	22542705
22.	8–M15	1.269	**CLIP**, RAD GRL	98–02	F	3	10286748
23.		8.921	**NUT–U SHAPE (M6X1**, 1060 PEOR) MULIT–THREAD SPRING (FRT BPR FASCIA)	98–02	F	8	11518121
24.		8.913	**SCREW**, PAN HD, M6.3X1.81X30, TORX, 6010M, AB PNT, 22 THD, TAPPING (FRT LIC PLT)	98–02	F	AR	11508919
25.		8.977	**SCREW**, TRUSS HD SLOTTED TAP M6.3X1.81X 16 SS BLK (FRT LIC)	98–02		4	11505162
26.	8–A26	7.800	**ATTACHMENT KIT**, FRT LIC PLT (INCLS FRONT BRACKET)	98–02	F (VK3)	1	10272212
	8–A26	7.800	**ATTACHMENT KIT**, FRT LIC PLT	98–02	F (VL4)	1	10272214
	8–A26	7.800	**BRACKET**, FRT LIC PLT	98–02	F (VL6) (EXPORT)	1	10288951
27.	8–M15	1.266	**GRILLE**, RAD ("CAMARO")	98–02	F	1	10280356
28.	8–A28	7.832	**EMBLEM**, FRT BPR FASCIA	98–02	F	1	10193494
29.		8.900	**BOLT**, (FRT BPR FASCIA LWR DFL)	98–02		8	20351035
30.		8.921	**NUT–U SHAPE (M6X1**, 1060 PEOR) MULIT–THREAD SPRING (FRT BPR FASCIA)	98–02	F	8	11518121
31.	8–A28	7.833	**RETAINER**, FRT BPR FASCIA OTR SUPT (PUSH IN) (BLACK) (14.875)	98–02	F	4	20699808
32.	8–N4	2.726	**SUPPORT**, HDLP (INNER) (W/WELD STUDS REQS "2" NUTS)	98–02	F	RH	10276145
	8–N4	2.726	**SUPPORT**, HDLP (INNER) (W/WELD STUDS REQS "2" NUTS)	98–02	F	LH	10276146
33.		8.900	**BOLT**, HEX W/CON WA, M6X1X20 (INNER)	98–02	F	4	11514623

RPO DEFINITIONS
VK3 – LICENSE PLATE,FRONT MOUNTING PACKAGE
VL4 – LICENSE PLATE,FRONT MOUNTING PACKAGE(EXPORT)

cardiagn.com

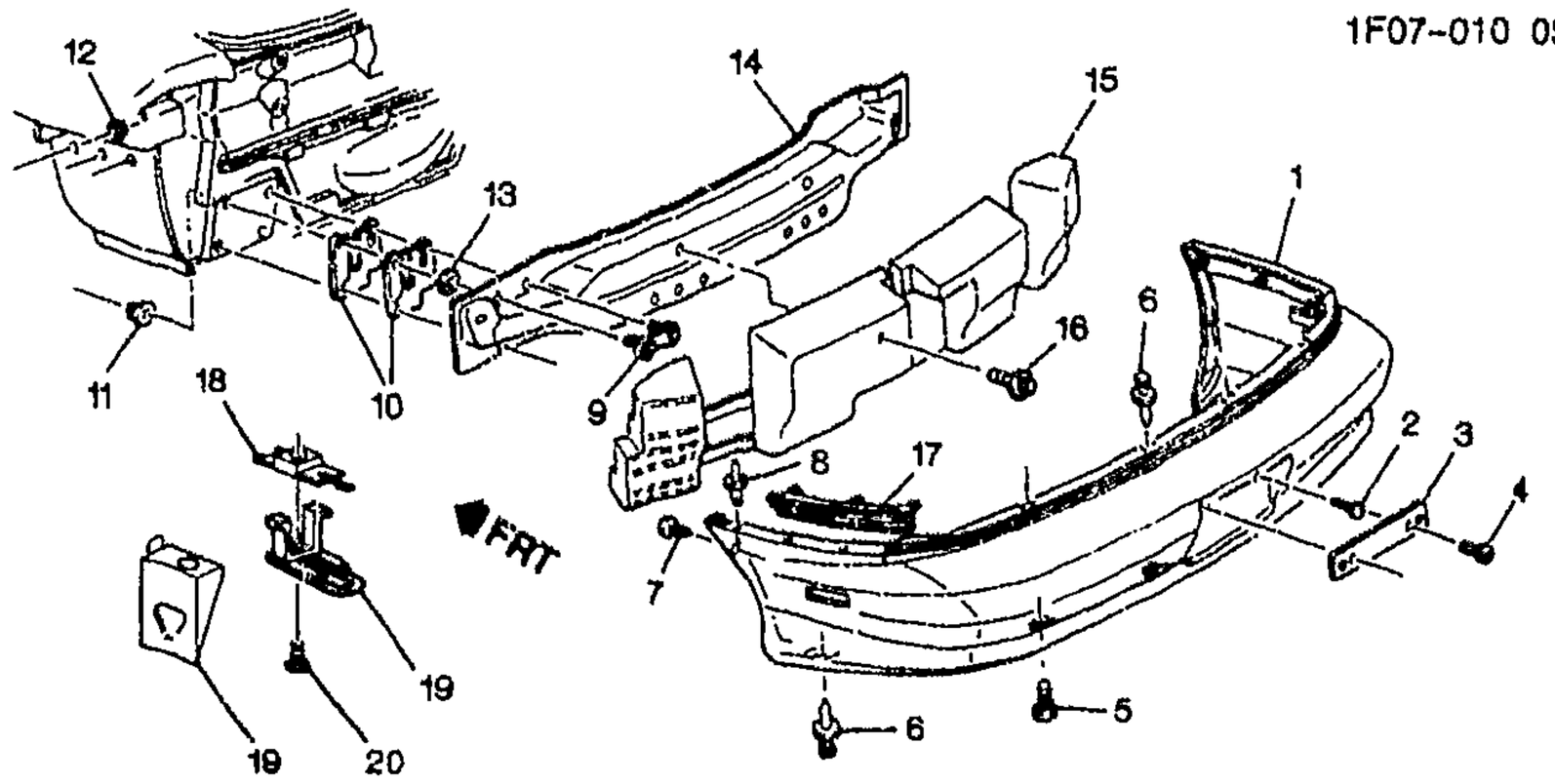

1F07-010

1993-2002 F BUMPER/REAR

1.	8-A27	7.831	FASCIA, RR BPR	98-02	F (VL5)	1	12335528
	8-A27	7.831	FASCIA, RR BPR (IF ORDERING FOR RS CAMARO, Y3F, MUST ALSO ORDER TEMPLATE 12530097) (PAINT TO MATCH) ...	93-97	F	1	10231299
	8-A27	7.831	FASCIA, RR BPR (IF ORDERING FOR RS CAMARO, Y3F, MUST ALSO ORDER TEMPLATE 12530097) (PAINT TO MATCH) ...	98-02	F (EXC VL5)	1	10231299
2.		8.977	SCREW, TRUSS HD SLOTTED TAP M6.3X1.81X 16 SS BLK (LIC BRKT)	93-02	(EXC VL5)	2	11505162
3.	8-A26	7.800	BRACKET, RR LIC PLT	93-97	F (VL5) (EXPORT)	1	10189400
	8-A26	7.800	BRACKET, RR LIC PLT	98-02	F (VJ1) (EXPORT)	1	10189400
4.		8.977	SCREW, FLT C/SUNK TORX, T20, M6.3X1.81X20, TYPE AB, PO (RR LIC BRKT) (AC-DELCO #11507101)	93-02	(VL5)	2	11507101
5.		8.950	RETAINER, FITS .250 HOLE, 1.01LG.700-OD NYLON BLACK (RR BPR FASCIA)	93-02	.....	4	10121502
6.	8-A27	7.831	RETAINER, RR BPR FASCIA (PUSH IN) (22.5MM LG) (1.269) ..	93-02	F	6	5973400
7.		8.977	SCREW, LG RND WA HD W/BLK NYL WA, 4.2X 1.41X13, 11-OD, DRILL PT, 6172, PEOR (RR BPR FASCIA)	93-02	.....	2	10180421
8.		8.967	RIVET, DOME HD, .153X.406 AL, PL (RR BPR FASCIA SUPT)	93-02	.....	6	9434229
9.	8-A28	7.636	PLATE, RR BPR IMP BAR STUD .	93-02	F	4	10166722
10.	8-B2	7.865	SHIM, RR BPR IMP BAR	93-02	F	AR	10021719
11.		8.917	NUT, HEX W/CON WA 28 OD, M8X1.25, 7.5 THK9, PEOR (RR BPR IMP BAR)	93-02	.....	8	11509294

cardiagn.com

							1F07-010
12.		8.917	**NUT**, HEX W/CON WA M6X1X5.5, 24-OD 9 PEOR (RR BPR FASCIA) (8.915)	93-02		6	11508388
	8-A8	7.068	**CLEVIS**, RR TIE DN	98-02	F (VR6)	1	10247034
13.		8.921	**NUT**, METRIC PUSH-ON BOLT RETAINING SPRING (RR BPR IMP BAR BOLT (NOT ALL CARS EQUIPPED WITH THIS ITEM)	93-02		4	10009923
14.	8-A27	7.831	**BAR**, RR BPR IMP	93-02	F	1	10294219
15.	8-B2	7.840	**ABSORBER**, RR BPR FASCIA ENGY (AC-DELCO #16514312)	93-97	F	1	16514312
	8-B2	7.840	**ABSORBER**, RR BPR FASCIA ENGY (AC-DELCO #16514312)	98-02	F (EXC VL5)	1	16514312
	8-B2	7.840	**ABSORBER**, RR BPR FASCIA ENGY (AC-DELCO #16524825)	98-02	F (VL5) (EXPORT)	1	16524825
16.		8.977	**SCREW**, (M6.3-1.81X35 HEX TAP W/CONICAL & SEAL WA-PC) (R/END FASCIA ENGY ABS)	93-02		10	499658
17.	8-A28	7.836	**PLATE**, RR BPR FASCIA SUPT STUD	93-02	F	RH	10402131
	8-A23	7.836	**PLATE**, RR BPR FASCIA SUPT STUD	93-02	F	LH	10402132
18.	8-A8	7.068	**SPACER**, RR TOW HOOK (W/SPR CLIP)	93-02	F (VR6)	1	10238267
19.	8-A8	7.068	**CLEVIS**, RR TIE DN	93-97	F (VR6)	1	10247034
	8-A8	7.068	**HOOK**, RR TOW	98-02	F (VR7)	1	10191861
20.	8-A8	7.068	**BOLT**, RR TOW HOOK	93-02	F (VR6)	1	10225315

RPO DEFINITIONS

VJ1 – LICENSE PLATE RR MOUNTING PKG ---- JAPANESE
VL5 – LICENSE PLATE,REAR MOUNTING PACKAGE(EXPORT)
VR6 – HOOK,TIE DOWN
VR7 – HOOK TOW, SECOND, RR

cardiagn.com

ILLUSTRATION INDEX

	TITLE	GRID
1993–1997	F SHEET METAL/FRONT END	8–G4
1998–1999	F SHEET METAL/FRONT END	8–G10
2000–2002	F SHEET METAL/FRONT END	8–G16
1993–1999	F LABELS	8–G21
2000–2002	F LABELS	8–G25
1993–2002	F SPARE WHEEL STOWAGE & JACK PARTS	8–G27
1993–1996	F HEATER & BLOWER ASM (C41)	8–H2
1993–1994	F HOSES & PIPES/HEATER (LT1/5.7P)	8–H5
1993–1995	F HOSES & PIPES/HEATER (L32/3.4S)	8–H7
1995–1997	F HOSES & PIPES/HEATER (LT1/5.7P)	8–H9
1995–1997	F HOSES & PIPES/HEATER (L36/3.8K)	8–H11
1998–2002	F HOSES & PIPES/HEATER (LS1/5.7G)	8–H13
1998–2002	F HOSES & PIPES/HEATER (L36/3.8K)	8–H14
1993–1996	F HEATER CONTROL ASM (C41)	8–H16
1993–1996	F HEATER CONTROL SYSTEM (C41)	8–H18

cardiagn.com

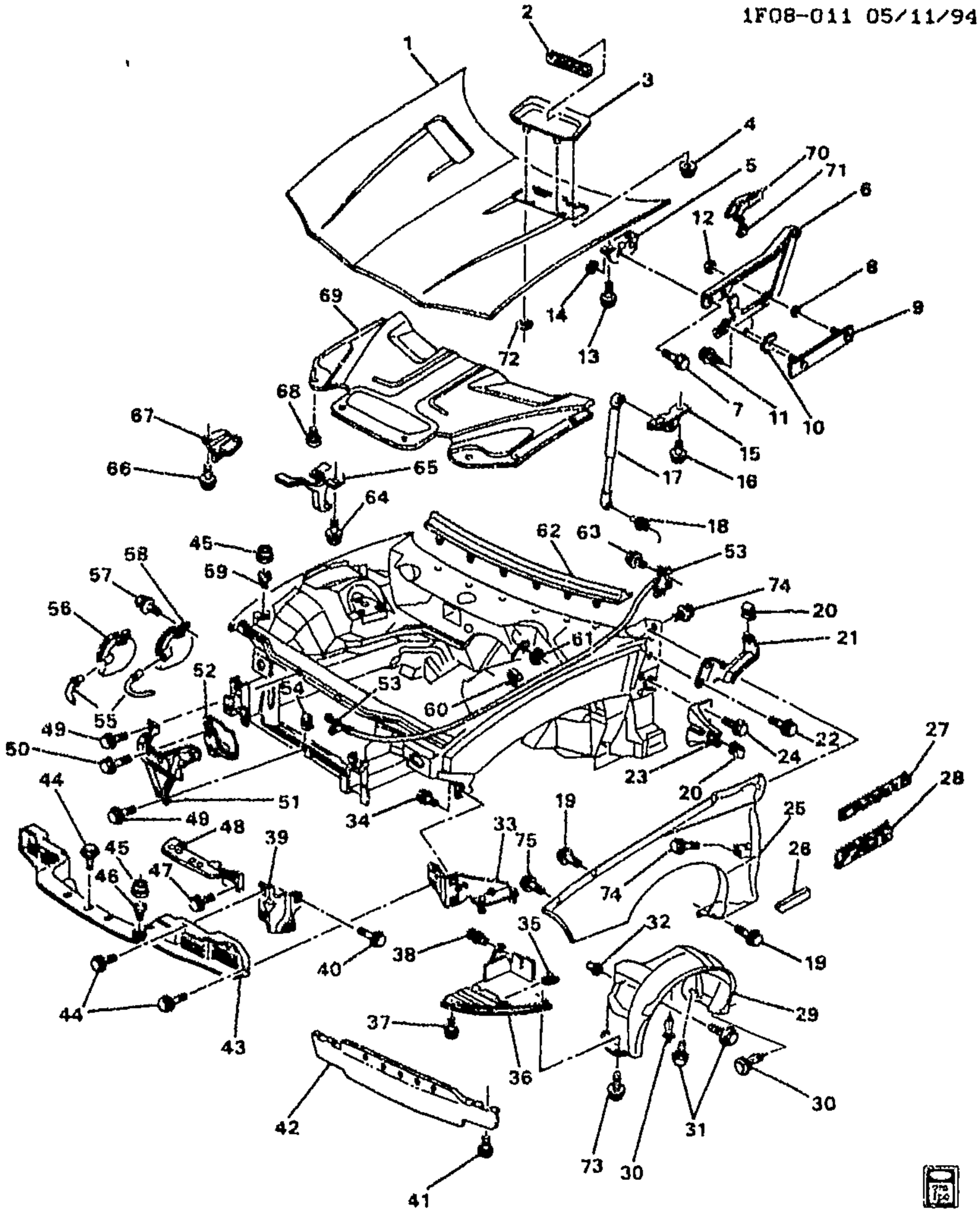

1F08-011

1993--1997 F SHEET METAL/FRONT END

NOTE: FOR INFORMATION ON AIR DEFLECTORS AND RADIATORS SEE RADIATOR MOUNTING & RELATED PARTS ILLUSTRATION IN GROUP 1.000.

1.	8-C7	8.000	**HOOD,**	93-97	F	1	10237181
2.	8-C7	8.054	**SCREEN,** HOOD AIR EXTRACTOR	93-97	F	RH	10182044
	8-C7	8.054	**SCREEN,** HOOD AIR EXTRACTOR	93-97	F	LH	10182045
3.	8-C7	8.054	**EXTRACTOR,** HOOD AIR	93-97	F	RH	10273668

cardiagn.com

							1F08-011
	8-C7	8.054	**EXTRACTOR**, HOOD AIR	93-97	F	LH	10273669
4.		N.S.	**NUT**, HOOD AIR EXTRACTOR (HEX HEAD)			4	
5.	8-C7	8.015	**BRACKET**, HOOD HGE	93-97	F	RH	10244456
	8-C7	8.015	**BRACKET**, HOOD HGE	93-97	F	LH	10244457
6.	8-C7	8.015	**HINGE**, HOOD	93-97	F	RH	10241614
	8-C7	8.015	**HINGE**, HOOD	93-97	F	LH	10241615
7.		8.900	**BOLT-HEX**, M8X1.25X30, 22 THD, 24MM OD, 9.8, 7114M (HOOD BODY SI HGE)	93-97		4	11516594
8.		8.921	**NUT**, METRIC PUSH-ON BOLT RETAINING SPRING (HOOD HGE MT PLT (PUSH ON))	93-97		4	10009923
9.	8-C7	8.015	**PLATE**, HOOD HGE MT	93-97	F	2	10182026
10.	8-C7	8.016	**SHIM**, HOOD HGE	93-97	F	AR	10336938
11.		8.900	**BOLT**, (HOOD HGE)	93-97		2	20351035
12.		8.917	**NUT**, M8X1.25X7.1, ZC 10 (HOOD HGE)	93-97		4	11515748
13.		8.900	**BOLT-HEX**, M8X1.25X30, 22 THD, 24MM OD, 9.8, 7114M (HOOD HGE BRKT)	93-97		4	11516594
14.		8.917	**NUT**, M8X1.25X7.1, ZC 10 (HOOD HGE BRKT)	93-97		4	11515748
15.	8-C7	8.015	**BRACKET**, HOOD OPEN ASST ROD	93-97	F	LH	10182025
	8-C7	8.015	**BRACKET**, HOOD OPEN ASST ROD	93-97	F	RH	10417379
16.		8.900	**BOLT**, HEX W/CON WA, M6X1X20 (HOOD OPEN ASST ROD)	93-97		4	11514623
17.	8-C7	8.015	**ROD**, HOOD OPEN ASST	93-97	F	2	10138515
18.	8-C7	8.015	**STUD**, HOOD STRUT BALL (12.187)	93-97	F	2	10143220
19.	8-C9	8.131	**BOLT**, F/FDR (F/FDR) (M6X1X25, 23, 17 OD) (8.900)	93-97	F	12	11516413
20.		8.921	**NUT**, U-SHAPED MULTI THREAD SPRG (F/FDR RR CTR BRKT)	93-97	F	2	11515478
21.	8-C12	8.141	**BRACKET**, F/FDR RR UPR	93-97	F	RH	10419549
	8-C12	8.141	**BRACKET**, F/FDR RR UPR (FENDER TO HINGE PILLAR)	93-97	F	LH	10288966
	8-C12	8.141	**BRACKET**, F/FDR RR UPR (FENDER TO HINGE PILLAR)	96-97	F	RH	10288965
	8-C12	8.141	**BRACKET**, F/FDR RR UPR (PART OF FENDER)	93-97	F	LH	10285014
22.	8-C12	8.141	**BOLT**, F/FDR RR UPR BRKT (M8X1X25, 23, 17 OD) (8.900)	93-97	F	4	11516413
23.	8-C12	8.141	**BRACKET**, F/FDR RR CTR	93-97	F	2	10415009
24.	8-C9	8.131	**BOLT**, F/FDR RR CTR BRKT (BLACK) (M6X1X25) (2.559)	93-97	F	4	10094385
	8-C9	8.131	**BOLT**, F/FDR RR CTR BRKT (M6X1X25, 23, 17 OD) (8.900)	93-97	F	4	11516413
25.	8-C8	8.130	**FENDER**, FRT	93-97	F	RH	10284966
	8-C8	8.130	**FENDER**, FRT	93-97	F	LH	10284967
26.	8-C9	8.132	**MOLDING**, F/FDR CTR RR (GREEN GRAY)	93-94	F (B84, 18Q)	RH	10179172

cardiagn.com

							1F08-011
	8-C9	8.132	**MOLDING**, F/FDR CTR RR (PURPLE)	93-94	F (B84, 91Q)	RH	10179174
	8-C9	8.132	**MOLDING**, F/FDR CTR RR (BLACK)	93-97	F (B84, 41Q)	RH	10179176
	8-C9	8.132	**MOLDING**, F/FDR CTR RR (BLACK)	93-97	F (B84, 41Q)	LH	10179177
	8-C9	8.132	**MOLDING**, F/FDR CTR RR (RED)	93-95	F (B84, 71Q)	RH	10179178
	8-C9	8.132	**MOLDING**, F/FDR CTR RR (RED)	93-95	F (B84, 71Q)	LH	10179179
	8-C9	8.132	**MOLDING**, F/FDR CTR RR (RED)	93-97	F (B84, 81Q)	RH	10179180
	8-C9	8.132	**MOLDING**, F/FDR CTR RR (RED)	93-97	F (B84, 81Q)	LH	10179181
	8-C9	8.132	**MOLDING**, F/FDR CTR RR (BLUE)	93-96	F (B84, 80Q)	RH	10179182
	8-C9	8.132	**MOLDING**, F/FDR CTR RR (BLUE)	93-96	F (B84, 80Q)	LH	10179183
	8-C9	8.132	**MOLDING**, F/FDR CTR RR (WHITE)	93-97	F (B84, 10Q)	RH	10256552
	8-C9	8.132	**MOLDING**, F/FDR CTR RR (WHITE)	93-97	F (B84, 10Q)	LH	10256553
	8-C9	8.132	**MOLDING**, F/FDR CTR RR (PAINT TO MATCH) (REPL ALL COLORS)	93-97	F	RH	88892066
	8-C9	8.132	**MOLDING**, F/FDR CTR RR (PAINT TO MATCH) (REPL ALL COLORS)	93-97	F (B84)	LH	88892067
	8-C9	8.132	**MOLDING**, F/FDR CTR RR (TEAL)	94-96	F (B84, 37Q)	RH	10228504
	8-C9	8.132	**MOLDING**, F/FDR CTR RR (TEAL)	94-96	F (B84, 37Q)	LH	10228505
	8-C9	8.132	**MOLDING**, F/FDR CTR RR (YELLOW GREEN)	94-97	F (B84, 48Q)	RH	10244274
	8-C9	8.132	**MOLDING**, F/FDR CTR RR (YELLOW GREEN)	94-97	F (B84, 48Q)	LH	10244275
	8-C9	8.132	**MOLDING**, F/FDR CTR RR (CYCLAMEN)	95-97	F (B84, 05Q)	RH	10251143
	8-C9	8.132	**MOLDING**, F/FDR CTR RR (CYCLAMEN)	95-97	F (B84, 05Q)	LH	10251144
	8-C9	8.132	**MOLDING**, F/FDR CTR RR (SILVER)	95-97	F (B84, 13Q)	RH	10251145
	8-C9	8.132	**MOLDING**, F/FDR CTR RR (SILVER)	95-97	F (B84, 13Q)	LH	10251146
	8-C9	8.132	**MOLDING**, F/FDR CTR RR (TEAL)	95	F (B84, 79Q)	LH	10251148
	8-C9	8.132	**MOLDING**, F/FDR CTR RR (RED)	96-97	F (B84, 96Q)	RH	10265978
	8-C9	8.132	**MOLDING**, F/FDR CTR RR (RED)	96-97	F (B84, 96Q)	LH	10265979
	8-C9	8.132	**MOLDING**, F/FDR CTR RR (TEAL)	96-97	F (B84, 79Q)	RH	10285867
	8-C9	8.132	**MOLDING**, F/FDR CTR RR (TEAL)	96-97	F (B84, 79Q)	LH	10285868
27.	8-C12	8.147	**EMBLEM**, F/FDR ("CAMARO") (NO LONGER USED AFTER 1995) (BLACK)	93-94	F (EXC Z28)	2	10139556
28.	8-C12	8.147	**EMBLEM**, F/FDR ("RS")	96-97	F (Y3F)	2	12529243
	8-C12	8.147	**EMBLEM**, F/FDR ("Z28") (BLACK)	93-97	F (Z28)	2	10139552
29.	8-C12	8.153	**LINER**, FRT W/H	93-97	F	RH	10296525
	8-C12	8.153	**LINER**, FRT W/H	93-97	F	LH	10296526

cardiagn.com

							1F09-011
30.	8-C12	8.153	**RETAINER**, FRT W/H LNR (BLACK) (PUSH IN W/SCREW) (6.3MM DIA X 23MM) (1.276)	93-97	F	6	20664092
31.		8.977	**BOLT**, SCR HEX W/FLAT WA 12 DIA TYPE AB (FRT W/H PNL LNR)	93-97		8	11509374
32.	8-C12	8.153	**CAP**, FRT W/H LNR BOLT	93-97	F	6	14070933
33.	8-A27	7.831	**BRACKET**, FRT BPR FASCIA OTR	93-97	F	RH	10182012
	8-A27	7.831	**BRACKET**, FRT BPR FASCIA OTR	93-97	F	LH	10182013
34.		8.900	**BOLT**, (FRT BPR FASCIA OTR BRKT)	93-97	F	2	20351035
35.	8-M15	1.272	**NUT**, RAD AIR LWR DFL (USED ONLY ON EARLY '93 MODELS) (M6.3 X 1.81) (2.465)	93	F	10	10079170
36.	8-A28	7.833	**DEFLECTOR**, F/END FASCIA OTR	93-97	F	RH	10297290
	8-A28	7.833	**DEFLECTOR**, F/END FASCIA OTR	93-97	F	LH	10297291
37.		8.977	**SCREW**, 6.3X1.81X20 (FRT BPR FASCIA LWR DFL)	93-97		8	11509051
38.	8-A28	7.833	**RETAINER**, FRT BPR FASCIA LWR DFL (2.483)	93-97	F	2	14101262
39.	8-N4	2.726	**SUPPORT**, HDLP HSG PNL (W/WELD NUTS REQS "2" BOLTS)	93-97	F	RH	10280337
	8-N4	2.726	**SUPPORT**, HDLP (INNER) (W/WELD STUDS REQS "2" NUTS)	93-97	F	LH	10276146
40.		8.900	**BOLT**, HEX W/CON WA, M6X1X20 (HDLP HSG PNL SUPT)	93-97	F	4	11514623
41.		8.977	**SCREW**, HEX TAP M6.3X1.81X20 W/FL WA PH ORG (RAD AIR LWR DFL)	93-97		12	11504037
42.	8-M15	1.272	**DEFLECTOR**, RAD AIR LWR	93-97	F	1	10229657
43.	8-N4	2.726	**PANEL**, HDLP HSG (SEE "LAMPS/FRONT" ILLUSTRATION IN GRP. 2.000 FOR DETAILED VIEW.) (WITH HEADLAMPS)	93-97	F (EXC T72)	1	16524835
	8-N4	2.726	**PANEL**, HDLP HSG (SEE "LAMPS/FRONT" ILLUSTRATION IN GRP. 2.000 FOR DETAILED VIEW.) (WITHOUT HEADLAMPS)	93-97	F (EXC T72)	1	16524838
	8-N4	2.726	**PANEL**, HDLP HSG (SEE "LAMPS/FRONT" ILLUSTRATION IN GRP. 2.000 FOR DETAILED VIEW.)	93-97	F (T72) (EXPORT)	1	16524836
44.	8-N4	2.726	**BOLT**, HDLP HSG PNL (M6X1X20) (8.900)	93-94	F	10	11514623
	8-N4	2.726	**BOLT**, HDLP HSG PNL (8.977) (USE T/W STD PT 11500321)	94	F	4	11503257
	8-N4	2.726	**BOLT**, HDLP HSG PNL (M6X1X18) (1.060)	95-97	F	10	52464988
45.	8-C7	8.024	**CAP**, HOOD ADJ FRT BPR (BLACK) (7.5MM)	93-97	F	4	14093705
46.	8-C7	8.024	**BUMPER**, HOOD ADJ FRT	93-97	F	2	10157703

cardiagn.com

	8-C7	8.024	**BUMPER**, HOOD ADJ FRT (24.42X28.20X40.00)	93-97	F	2	10413888
47.		8.900	**BOLT**, (HDLP HSG PNL UPR BRKT)	93	F	2	20351035
		8.900	**BOLT**, HEX W/CON WA, M6X1X20 (HDLP HSG PNL UPR BRKT)	94-97	F	2	11514623
48.	8-N4	2.726	**BRACKET**, HDLP HSG PNL UPR	93-97	F	1	10247777
49.		8.900	**BOLT**, HEX W/LG FL WA M6.3X1.81X25 POR (HOOD PRIM LAT SUPT)	93-97		3	11507083
50.	8-C8	8.080	**BOLT**, HOOD PRIM LAT (8.900)	93-97	F	2	11504611
51.	8-C8	8.080	**SUPPORT**, HOOD PRIM LAT	93-97	F	1	10247776
52.	8-C8	8.080	**LATCH**, HOOD PRIM	93-97	F	1	16632816
53.	8-C8	8.075	**CABLE**, HOOD PRIM LAT REL (INCLS HNDL)	93-97	F	1	10250435
54.	8-C8	8.080	**NUT**, HOOD PRIM LAT SUPT (M6.3 X 1.81) (2.485)	93-97	F	1	10079170
55.	8-N5	2.815	**CONNECTOR**, HORN (GREY) (2-WAY F, M/P 150 SLD W/LEADS) (4.710) (AC-DELCO #PT1357)	93-97	F	2	15306302
	8-N5	2.815	**CONNECTOR**, HORN (LT GREY) (2-WAY F150) (FSU-12116958 FOR NON-WHL SPD SENSOR APPLICATIONS ONLY) (2.535)	95-97	F (L36)	1	12052644
	8-N5	2.815	**CONNECTOR**, HORN (BLACK) (6-WAY F) (W/O LEADS) (3.900)	97	F	1	12110541
56.	8-N5	2.810	**HORN KIT**, GENERIC (HIGH NOTE) (W/BRACKET) (AC-DELCO #D1925C)	93-97	F	1	12368063
57.		8.977	**SCREW**, HEX SER WA HD TAP M8-1.25X20 (HORN)	93-97		2	11501812
58.	8-N5	2.810	**HORN KIT**, GENERIC (LOW NOTE) (W/BRACKET) (AC-DELCO #D1922C)	93-97	F	1	12368064
59.	8-C7	8.024	**BUMPER**, HOOD ADJ FRT	93-97	F	2	10157703
	8-C7	8.024	**BUMPER**, HOOD ADJ FRT (24.42X28.20X40.00)	93-97	F	2	10413888
60.	8-C8	8.075	**CLIP**, HOOD PRIM LAT REL CBL (7MM) (NYLON) (8.077)	93-97	F	1	20087231
61.		8.915	**NUT**, HFH, 10X1.5 6H THD, 21.3 OD, 9.8 THK 13 HEX DR, GRD 9, ZF (HOOD STRUT) (8.917)	93-97		2	10255857
62.	8-C7	8.010	**SEAL**, HOOD RR	93-97	F	1	10243828
63.	8-C8	8.075	**BOLT**, HOOD PRIM LAT REL CBL (BLACK) (M6X1X25) (2.559)	93-97	F	2	10094388
	8-C8	8.075	**BOLT**, HOOD PRIM LAT REL CBL (M6X1X25, 23, 17 OD) (8.900)	93-97	F	2	11516413
64.	8-C8	8.083	**BOLT**, HOOD SECD LAT (M6X1X25, 23, 17 OD) (8.900)	93-97	F	2	11516413
65.	8-C8	8.083	**LATCH**, HOOD SECD	93-97	F	1	16631350
66.		8.900	**BOLT-HEX**, M8X1.25X30, 22 THD, 24MM OD, 9.8, 7114M (HOOD PRIM LAT STKR)	93-97		2	11516594
67.	8-C8	8.080	**STRIKER**, HOOD PRIM LAT	93-97	F	1	16629012

cardiagn.com

							1F08-011
68.		8.950	RETAINER, PUSH-IN 0.35--LEN 0.25 HOLE DIA 2.0 HD DIA PLASTIC (HOOD INSL) (8.021) ..	93-97	.....	9	20064875
69.	8-C7	8.021	INSULATOR, HOOD	93-97	F	1	10278015
70.	8-C7	8.015	COVER, HOOD HGE (NO COMPARABLE RH PART)	93-97	F	LH	10224468
71.	8-C7	8.015	RETAINER, HOOD HGE CVR	93-97	F	1	10224748
72.		8.921	NUT, METRIC PUSH-ON BOLT RETAINING SPRING (HOOD AIR EXTRACTOR)	93-97	.....	4	10009923
73.		8.977	SCREW, 6.3X1.81X20 (FRT W/H PNL)	93-97	.....	4	11509051
74.		8.900	BOLT, (F/FDR)	93-97	F	6	20351035
75.		8.900	BOLT, HEX W/CON WA, M6X1X20 (AT FENDER)	93-97	F	2	11514623

RPO DEFINITIONS

B84 -- ORNAMENTATION,EXTERIOR,BODY SIDE MOLDING
L36 -- ENGINE GAS, 6 CYL, 3.8K, MFI, V6, HO (ERV6 SERIES)
T72 -- HEADLAMPS,L.H RULE OF THE ROAD(EXPORT)
Y3F -- SALES PACKAGE RS CAMARO UPFITTER
Z28 -- SPECIAL PERFORMANCE PACKAGE,(MERCHANDISING OPTION)
05Q -- MOLDING COLOR CYCLAMEN (95)
10Q -- MOLDING COLOR,ARCTIC WHITE
13Q -- MOLDING COLOR,SILVER METALLIC
18Q -- MOLDING COLOR,DK GREEN GRAY METALLIC
37Q -- MOLDING COLOR,DARK BRIGHT TEAL,MET
41Q -- MOLDING COLOR,BLACK
48Q -- MOLDING COLOR DK YELLOW GREEN MET (91)
71Q -- MOLDING COLOR,RED
79Q -- MOLDING COLOR -- MYSTIC TEAL PEARL
80Q -- MOLDING COLOR MED QUASAR BLUE MET (91)
81Q -- MOLDING COLOR -- BRIGHT RED
91Q -- MOLDING COLOR,EXTERIOR,PURPLE PEARL
96Q -- MOLDING COLOR CAYENNE RED MET

cardiagn.com

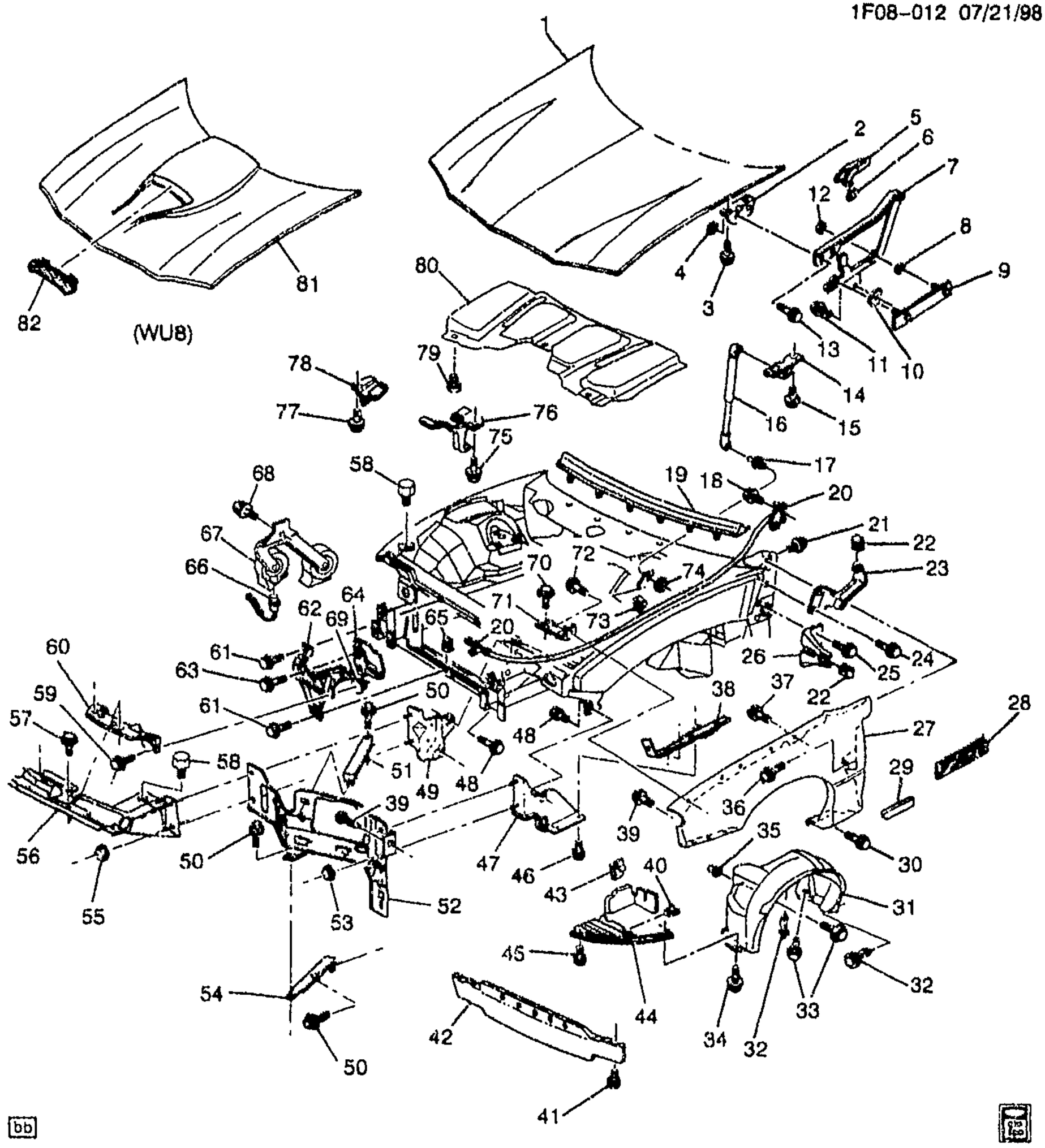

1F08-012

1998-1999 F SHEET METAL/FRONT END

NOTE: FOR INFORMATION ON AIR DEFLECTORS AND RADIATORS SEE RADIATOR MOUNTING & RELATED PARTS ILLUSTRATION IN GROUP 1.000.

1.	8-C7	8.000	HOOD,	98-99	F	1	10269571
2.	8-C7	8.015	BRACKET, HOOD HGE	98-99	F	RH	10244456
	8-C7	8.015	BRACKET, HOOD HGE	98-99	F	LH	10244457

cardiagn.com

3.		8.900	**BOLT–HEX**, M8X1.25X30, 22 THD, 24MM OD, 9.8, 7114M (HOOD HGE BRKT)	98–99		4	11516594
4.		8.917	**NUT**, M8X1.25X8 (HOOD HGE BRKT)	98–99		4	11516071
5.	8–C7	8.015	**COVER**, HOOD HGE (NO COMPARABLE RH PART)	98–99	F	LH	10224468
6.	8–C7	8.015	**RETAINER**, HOOD HGE CVR	98–99	F	1	10224748
7.	8–C7	8.015	**HINGE**, HOOD	98–99	F	RH	10283847
	8–C7	8.015	**HINGE**, HOOD	98–99	F	LH	10283848
8.		8.921	**NUT**, METRIC PUSH–ON BOLT RETAINING SPRING (HOOD HGE MT PLT (PUSH ON))	98–99		4	10009923
9.	8–C7	8.015	**PLATE**, HOOD HGE MT	98–99	F	2	10182026
10.	8–C7	8.016	**SHIM**, HOOD HGE	98–99	F	AR	10236938
11.		8.900	**BOLT**, (HOOD HGE)	98–99		2	20351035
12.		8.917	**NUT**, M8X1.25X8 (HOOD HGE)	98–99		4	11516071
13.		8.900	**BOLT–HEX**, M8X1.25X30, 22 THD, 24MM OD, 9.8, 7114M (HOOD BODY SI HGE)	98–99		4	11516594
14.	8–C7	8.015	**BRACKET**, HOOD OPEN ASST ROD	98–99	F	LH	10182025
	8–C7	8.015	**BRACKET**, HOOD OPEN ASST ROD	98–99	F	RH	10417379
15.		8.900	**BOLT**, HEX W/CON WA, M6X1X20 (HOOD OPEN ASST ROD)	98–99		4	11514623
16.	8–C7	8.015	**ROD**, HOOD OPEN ASST	98–99	F	2	10293455
17.	8–C7	8.015	**STUD**, HOOD STRUT BALL (12.187)	98–99	F	2	10143220
18.	8–C8	8.075	**BOLT**, HOOD PRIM LAT REL CBL (BLACK) (M6X1X25) (2.559)	98–99	F	2	10094385
	8–C8	8.075	**BOLT**, HOOD PRIM LAT REL CBL (M6X1X25, 23, 17 OD) (8.900)	98–99	F	2	11516413
19.	8–C7	8.010	**SEAL**, HOOD RR	98–99	F	1	10243828
20.	8–C8	8.075	**CABLE**, HOOD PRIM LAT REL (INCLS HNDL)	98–99	F	1	10250435
21.		8.900	**BOLT**, (F/FDR)	98–99	F	6	20351035
22.		8.921	**NUT**, U–SHAPED MULTI THREAD SPRG (F/FDR RR CTR BRKT)	98–99	F	2	11515478
23.	8–C12	8.141	**BRACKET**, F/FDR RR UPR	98–99	F	RH	10419549
	8–C12	8.141	**BRACKET**, F/FDR RR UPR	98–99	F	RH	10414408
	8–C12	8.141	**BRACKET**, F/FDR RR UPR	98–99	F	LH	10414409
	8–C12	8.141	**BRACKET**, F/FDR RR UPR (PART OF FENDER)	98–99	F	LH	10285014
24.	8–C12	8.141	**BOLT**, F/FDR RR UPR BRKT (M6X1X25, 23, 17 OD) (8.900)	98–99	F	4	11516413
25.	8–C9	8.131	**BOLT**, F/FDR RR CTR BRKT (BLACK) (M6X1X25) (2.559)	98–99	F	4	10094385
	8–C9	8.131	**BOLT**, F/FDR RR CTR BRKT (M6X1X25, 23, 17 OD) (8.900)	98–99	F	4	11516413
26.	8–C12	8.141	**BRACKET**, F/FDR RR CTR	98–99	F	2	10415009
27.	8–C8	8.130	**FENDER**, FRT	98–99	F	RH	10419545
	8–C8	8.130	**FENDER**, FRT	98–99	F	LH	10419546
28.	8–C12	8.147	**EMBLEM**, F/FDR ("Z28") (BLACK)	98–99	F (Z28)	2	10139552

cardiagn.com

29.	8–C9	8.132	MOLDING, F/FDR CTR RR (BLACK)	98–99	F (B84, 41Q)	RH	10179176
	8–C9	8.132	MOLDING, F/FDR CTR RR (BLACK)	98–99	F (B84, 41Q)	LH	10179177
	8–C9	8.132	MOLDING, F/FDR CTR RR (RED)	98–99	F (B84, 81Q)	RH	10179180
	8–C9	8.132	MOLDING, F/FDR CTR RR (RED)	98–99	F (B84, 81Q)	LH	10179181
	8–C9	8.132	MOLDING, F/FDR CTR RR (WHITE)	98–99	F (B84, 10Q)	RH	10256552
	8–C9	8.132	MOLDING, F/FDR CTR RR (WHITE)	98–99	F (B84, 10Q)	LH	10256553
	8–C9	8.132	MOLDING, F/FDR CTR RR (PAINT TO MATCH) (REPL ALL COLORS)	98–99	F	RH	88892066
	8–C9	8.132	MOLDING, F/FDR CTR RR (PAINT TO MATCH) (REPL ALL COLORS)	98–99	F (B84)	LH	88892067
	8–C9	8.132	MOLDING, F/FDR CTR RR (SILVER)	98–99	F (B84, 13Q)	RH	10251145
	8–C9	8.132	MOLDING, F/FDR CTR RR (SILVER)	98–99	F (B84, 13Q)	LH	10251146
	8–C9	8.132	MOLDING, F/FDR CTR RR (RED)	98	F (B84, 96Q)	RH	10265978
	8–C9	8.132	MOLDING, F/FDR CTR RR (RED)	98	F (B84, 96Q)	LH	10265979
	8–C9	8.132	MOLDING, F/FDR CTR RR (TEAL)	98–99	F (B84, 79Q)	RH	10285867
	8–C9	8.132	MOLDING, F/FDR CTR RR (TEAL)	98–99	F (B84, 79Q)	LH	10285868
	8–C9	8.132	MOLDING, F/FDR CTR RR (SAPPHIRE)	98–99	F (B84, 28Q)	RH	10285882
	8–C9	8.132	MOLDING, F/FDR CTR RR (SAPPHIRE)	98–99	F (B84, 28Q)	LH	10285883
	8–C9	8.132	MOLDING, F/FDR CTR RR (PEWTER)	98–99	F (B84, 11Q)	RH	10400715
	8–C9	8.132	MOLDING, F/FDR CTR RR (PEWTER)	98–99	F (B84, 11Q)	LH	10400716
	8–C9	8.132	MOLDING, F/FDR CTR RR (RED)	99	F (B84, 44Q)	RH	10413020
	8–C9	8.132	MOLDING, F/FDR CTR RR (RED)	99	F (B84, 44Q)	LH	10413021
30.	8–C9	8.131	BOLT, F/FDR (M6X1X25, 23, 17 OD) (8 900)	98–99	F	6	11516413
31.	8–C12	8.153	LINER, FRT W/H	98–99	F	RH	10296525
	8–C12	8.153	LINER, FRT W/H	98–99	F	LH	10296526
32.	8–C12	8.153	RETAINER, FRT W/H LNR (BLACK) (PUSH IN W/SCREW) (6.3MM DIA X 23MM) (1.276)	98–99	F	6	20664092
33.		8.977	BOLT, SCR HEX W/FLAT WA 12 DIA TYPE AB (FRT W/H PNL LNR)	98–99		8	11509374
34.		8.977	SCREW, 6.3X1.81X20 (FRT W/H PNL)	98–99		4	11509051
35.	8–C12	8.153	CAP, FRT W/H LNR BOLT	98–99	F	3	14070933
36.		8.900	BOLT, (F/FDR)	98–99	F	6	20351035
37.	8–C9	8.131	BOLT, F/FDR (SCREW–HEX HD W/SHLDR WA, M6X1X25, 23.75, 6010M, 6138M)	98–99	F	8	10285725
38.	8–C12	8.141	PLATE, F/FDR LWR BODY MT	98–99	F	RH	10409246
	8–C12	8.141	PLATE, F/FDR LWR BODY MT	98–99	F	LH	10409247
39.	8–C9	8.131	BOLT, F/FDR (M6X1.0X26 HEX) (8.900)	98–99	F	2	10409170

cardiagn.com

40.		N.S.	NUT, RAD AIR LWR DFL (PART OF 44)				
41.		8.977	SCREW, HEX TAP M6.3X1.81X20 W/FL WA PH ORG (RAD AIR LWR DFL)	98–99		12	11504037
42.	8–M15	1.272	DEFLECTOR, RAD AIR LWR	98–99	F	1	10229657
43.		N.S.	RETAINER, FRT BPR FASCIA LWR DFL				
44.	8–A28	7.833	DEFLECTOR, F/END FASCIA OTR (INCLS 40)	98–99	F	RH	10297290
	8–A28	7.833	DEFLECTOR, F/END FASCIA OTR (INCLS 40)	98–99	F	LH	10297291
45.		8.977	SCREW, 6.3X1.81X20 (FRT BPR FASCIA LWR DFL)	98–99		8	11509051
46.		8.900	BOLT ASM, HEX W/CON WA, M6X1X25, 17 OD, FULL THD, AC PT, 9.8, CD CHROMATE BLK (F/FDR LWR BODY MT PLT)	98–99	F	4	11509363
47.	8–N4	2.726	SUPPORT, HDLP	98–99	F	RH	10414795
	8–N4	2.726	SUPPORT, HDLP	98–99	F	LH	10414795
48.		8.900	BOLT, HEX W/CON WA, M6X1X20 (HDLP SUPT)	98–99		8	11514623
49.	8–N4	2.726	SUPPORT, HDLP (INNER) (W/WELD STUDS REQS "2" NUTS)	98–99	F	RH	10276145
	8–N4	2.726	SUPPORT, HDLP (INNER) (W/WELD STUDS REQS "2" NUTS)	98–99	F	LH	10276146
50.		8.900	BOLT, HEX W/CON WA, M6X1X20 (HDLP HSG PNL BRKT)	98–99	F	2	11514623
51.	8–N4	2.726	BRACKET, HDLP BRKT (UPPER)	98–99	F	RH	10290655
	8–N4	2.726	BRACKET, HDLP BRKT (UPPER)	98–99	F	LH	10290656
52.	8–N4	2.726	BRACKET, HDLP	98–99	F	RH	10416137
	8–N4	2.726	BRACKET, HDLP	98–99	F	LH	10416138
53.		8.917	NUT, HEX W/CON WA 6X1X5.5 16–OD ZP 9 (HDLP SUPT)	98–99	F	4	11517293
54.	8–N4	2.726	BRACKET, HDLP (LOWER, W/NUT)	98–99	F	RH	10290657
	8–N4	2.726	BRACKET, HDLP (LOWER, W/NUT)	98–99	F	LH	10290658
55.		8.917	NUT, HEX W/CON WA 6X1X5.5 16–OD ZP 9	98–99	F	4	11517293
56.	8–A28	7.833	SUPPORT, FRT BPR FASCIA CTR	98–99	F	1	10276561
57.	8–A28	7.833	BOLT, FRT BPR FASCIA CTR SUPT (M6X1X18) (1.060)	98–99	F	2	52464988
58.	8–C7	8.024	BUMPER, HOOD ADJ FRT (24.42X28.20X40.00)	98–99	F	2	10413888
59.		8.900	BOLT, HEX W/CON WA, M6X1X20 (HDLP HSG PNL UPR BRKT)	98–99	F	2	11514623
60.	8–N4	2.726	BRACKET, HDLP HSG PNL UPR	98–99	F	1	10247777
61.		8.900	BOLT, HEX W/LG FL WA M6.3X1.81X25 POR (HOOD PRIM LAT SUPT)	98–99		3	11507083
62.	8–C8	8.080	SUPPORT, HOOD PRIM LAT	98–99	F	1	10247776
63.		8.900	BOLT, HEX W/WA, M8X1.25X20, 8.8, PC (HOOD PRIM LAT)	98–99		1	11504611

cardiaopn.com

64.	8–C8	8.080	LATCH, HOOD PRIM	98–99	F	1	16632816
65.	8–C8	8.080	NUT, HOOD PRIM LAT SUPT (M6.3 X 1.81) (2.485)	98–99	F	1	10079170
66.	8–N5	2.815	CONNECTOR, HORN (GREY) (2–WAY F, M/P 150 SLD W/LEADS) (4.710) (AC–DELCO #PT1357)	98–99	F	2	15306302
	8–N5	2.815	CONNECTOR, HORN (LT GREY) (2–WAY F150) (FSU–12116958 FOR NON–WHL SPD SENSOR APPLICATIONS ONLY) (2.535)	98–99	F (L36)	1	12052644
	8–N5	2.815	CONNECTOR, HORN (BLACK) (6–WAY F) (W/O LEADS) (3.900)	98–99	F	1	12110541
67.	8–N5	2.810	HORN KIT, GENERIC (HIGH NOTE) (BRKT KIT INCLUDED) (AC–DELCO #D1921C)	98–99	F	1	12368061
	8–N5	2.810	HORN KIT, GENERIC (LOW NOTE) (BRKT KIT INCLUDED) (AC–DELCO #D1920C)	98–99	F	1	12368062
68.		8.977	SCREW, HEX SER WA HD TAP M8–1.25X20 (HORN)	98–99		2	11501812
69.		8.917	NUT, HEX W/CON WA M6X1X5.5, 24–OD 9 PEOR (HOOD PRIM LAT BRKT) (8.915)	98–99	F	AR	11508388
70.		8.900	SCREW, HEX M6X1X25 W/CON WA 9.8 POR (F/FDR BRKT)	98–99		2	11503982
71.	8–C12	8.141	BRACKET, F/FDR	98–99	F	2	10414405
72.		8.900	SCREW, HEX M6X1X25 W/CON WA 9.8 POR (F/FDR BRKT)	98–99		2	11503982
73.	8–C8	8.075	CLIP, HOOD PRIM LAT REL CBL (7MM) (NYLON) (8.077)	98–99	F	1	20087231
74.		8.915	NUT, HFH, 10X1.5 6H THD, 21.3 OD, 9.8 THK 13 HEX DR, GRD 9, ZF (HOOD STRUT) (8.917)	98–99		2	10255857
75.	8–C8	8.083	BOLT, HOOD SECD LAT (M6X1X25, 23, 17 OD) (8.900)	98–99	F	2	11516413
76.	8–C8	8.083	LATCH, HOOD SECD	98–99	F	1	10405538
77.		8.900	BOLT–HEX, M8X1.25X30, 22 THD, 24MM OD, 9.8, 7114M (HOOD PRIM LAT STKR)	98–99		2	11516594
78.	8–C8	8.080	STRIKER, HOOD PRIM LAT	98–99	F	1	16629012
79.		8.950	RETAINER, PUSH–IN 0.35–LEN 0.25 HOLE DIA 2.0 HD DIA PLASTIC (HOOD INSL) (8.021)	98–99		8	20064875
80.	8–C7	8.021	INSULATOR, HOOD	98–99	F	1	10272374
81.	8–C7	8.000	HOOD,	98–99	F (WU8)	1	12369963
82.	8–C7	8.054	SCREEN, HOOD AIR EXTRACTOR (ENGINE AIR INTAKE FUNCTION)	98–99	F (WU8)	1	12369964

RPO DEFINITIONS

B84 -- ORNAMENTATION,EXTERIOR,BODY SIDE MOLDING
L36 -- ENGINE GAS, 6 CYL, 3.8K, MFI, V6, HO (ERV6 SERIES)
WU8 -- SALES PACKAGE Z28 SS UPFITTER
Z28 -- SPECIAL PERFORMANCE PACKAGE,(MERCHANDISING OPTION)
10Q -- MOLDING COLOR,ARCTIC WHITE
11Q -- MOLDING COLOR,WHITE
13Q -- MOLDING COLOR,SILVER METALLIC

cardiagn.com

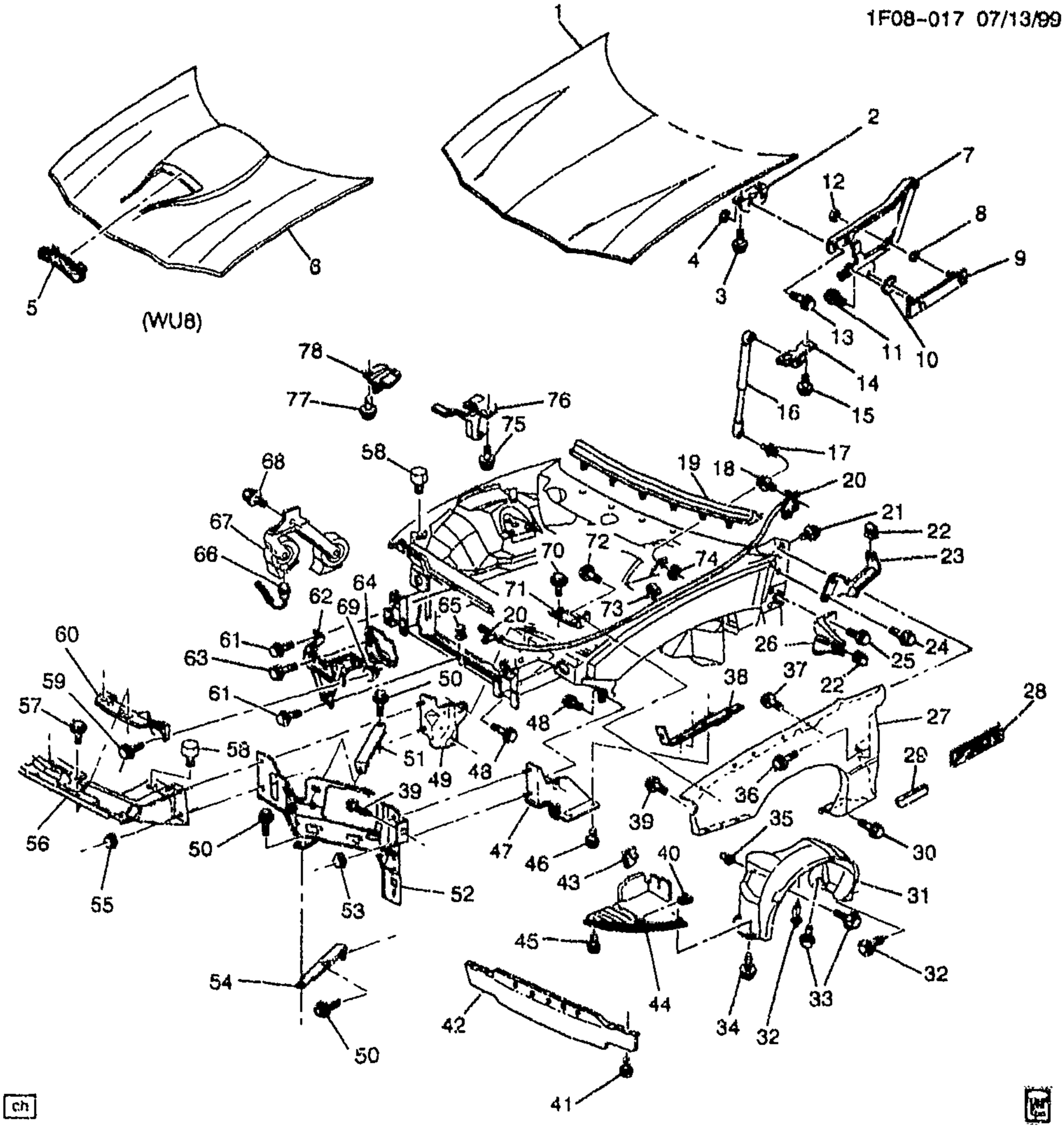

1F08-017

2000-2002 F SHEET METAL/FRONT END

NOTE: FOR INFORMATION ON AIR DEFLECTORS AND RADIATORS SEE RADIATOR MOUNTING & RELATED PARTS ILLUSTRATION IN GROUP 1.000.

1.	8-C7	8.000	HOOD.	00-02	F	1	10438613
2.	8-C7	8.015	BRACKET, HOOD HGE	00-02	F	RH	10244456
	8-C7	8.015	BRACKET, HOOD HGE	00-02	F	LH	10244457
3.		8.900	BOLT-HEX, M8X1.25X30, 22 THD, 24MM OD, 9.8, 7114M (HOOD HGE BRKT)	00-02		4	11516594

cardiagn.com

4.		8.917	**NUT**, M8X1.25X7.1, ZC 10 (HOOD HGE BRKT)	00–02		4	11515748
5.	8–C7	8.054	**SCREEN**, HOOD AIR EXTRACTOR (ENGINE AIR INTAKE FUNCTION)	00–02	F (WU8)	1	12369964
6.	8–C7	8.000	**HOOD**,	00–02	F (WU8)	1	12369963
7.	8–C7	8.015	**HINGE**, HOOD	00–02	F	RH	10283847
	8–C7	8.015	**HINGE**, HOOD	00–02	F	LH	10283848
8.		8.921	**NUT**, METRIC PUSH–ON BOLT RETAINING SPRING (HOOD HGE MT PLT)	00–02		4	10009923
9.	8–C7	8.015	**PLATE**, HOOD HGE MT	00–02	F	2	10182026
10.	8–C7	8.016	**SHIM**, HOOD HGE	00–02	F	AR	10236938
11.		8.900	**BOLT**, (HOOD HGE)	00–02		2	20351035
12.		8.917	**NUT**, M8X1.25X7.1, ZC 10 (HOOD HGE)	00–02		4	11515748
13.		8.900	**BOLT–HEX**, M8X1.25X30, 22 THD, 24MM OD, 9.8, 7114M (HOOD BODY SI HGE)	00–02		4	11516594
14.	8–C7	8.015	**BRACKET**, HOOD OPEN ASST ROD	00–02	F	LH	10182025
	8–C7	8.015	**BRACKET**, HOOD OPEN ASST ROD	00–02	F	RH	10417379
15.		8.900	**BOLT**, HEX W/CON WA, M6X1X20 (HOOD OPEN ASST ROD)	00–02		4	11514623
16.	8–C7	8.015	**ROD**, HOOD OPEN ASST	00–02	F	2	10293455
17.	8–C7	8.015	**STUD**, HOOD STRUT BALL (12.187)	00–02	F	2	10143220
18.	8–C8	8.075	**BOLT**, HOOD PRIM LAT REL CBL (BLACK) (M6X1X25) (2.559)	00–02	F	2	10094385
	8–C8	8.075	**BOLT**, HOOD PRIM LAT REL CBL (M6X1X25, 23, 17 OD) (8.900)	00–02	F	2	11516413
19.	8–C7	8.010	**SEAL**, HOOD RR	00–02	F	1	10243828
20.	8–C8	8.075	**CABLE**, HOOD PRIM LAT REL (INCLS HNDL)	00–02	F	1	10250435
21.		8.900	**BOLT**, (F/FDR)	00–02	F	6	20351035
22.		8.921	**NUT**, U–SHAPED MULTI THREAD SPRG (F/FDR RR CTR BRKT)	00–02	F	2	11515478
23.	8–C12	8.141	**BRACKET**, F/FDR RR UPR	00–02	F	RH	10419549
	8–C12	8.141	**BRACKET**, F/FDR RR UPR	00–02	F	RH	10414408
	8–C12	8.141	**BRACKET**, F/FDR RR UPR	00–02	F	LH	10414409
	8–C12	8.141	**BRACKET**, F/FDR RR UPR (PART OF FENDER)	00–02	F	LH	10285014
24.	8–C12	8.141	**BOLT**, F/FDR RR UPR BRKT (M6X1X25, 23, 17 OD) (8.900)	00–02	F	4	11516413
25.	8–C9	8.131	**BOLT**, F/FDR RR CTR BRKT (BLACK) (M6X1X25) (2.559)	00–02	F	4	10094385
	8–C9	8.131	**BOLT**, F/FDR RR CTR BRKT (M6X1X25, 23, 17 OD) (8.900)	00–02	F	4	11516413
26.	8–C12	8.141	**BRACKET**, F/FDR RR CTR	00–02	F	2	10415009
27.	8–C8	8.130	**FENDER**, FRT	00–02	F	RH	10419545
	8–C8	8.130	**FENDER**, FRT	00–02	F	LH	10419546
28.	8–C12	8.147	**EMBLEM**, F/FDR	02	FP67–87 (Z4C)	2	10307879
	8–C12	8.147	**EMBLEM**, F/FDR ("Z28") (BLACK)	00–02	F (Z28)	2	10139552

cardiagn.com

29.	8–C9	8.132	MOLDING, F/FDR CTR RR (BLACK)	00–02	F (B84, 41Q)	RH	10179176
	8–C9	8.132	MOLDING, F/FDR CTR RR (BLACK)	00–02	F (B84, 41Q)	LH	10179177
	8–C9	8.132	MOLDING, F/FDR CTR RR (RED)	00–02	F (B84, 81Q)	RH	10179180
	8–C9	8.132	MOLDING, F/FDR CTR RR (RED)	00–02	F (B84, 81Q)	LH	10179181
	8–C9	8.132	MOLDING, F/FDR CTR RR (WHITE)	00–02	F (B84, 10Q)	RH	10256552
	8–C9	8.132	MOLDING, F/FDR CTR RR (WHITE)	00–02	F (B84, 10Q)	LH	10256553
	8–C9	8.132	MOLDING, F/FDR CTR RR (PAINT TO MATCH) (REPL ALL COLORS)	00–02	F	RH	88892066
	8–C9	8.132	MOLDING, F/FDR CTR RR (PAINT TO MATCH) (REPL ALL COLORS)	00–02	F (B84)	LH	88892067
	8–C9	8.132	MOLDING, F/FDR CTR RR (SILVER)	00–02	F (B84, 13Q)	RH	10251145
	8–C9	8.132	MOLDING, F/FDR CTR RR (SILVER)	00–02	F (B84, 13Q)	LH	10251146
	8–C9	8.132	MOLDING, F/FDR CTR RR (TEAL)	00–01	F (B84, 79Q)	RH	10285867
	8–C9	8.132	MOLDING, F/FDR CTR RR (TEAL)	00–01	F (B84, 79Q)	LH	10285868
	8–C9	8.132	MOLDING, F/FDR CTR RR (SAPPHIRE)	00–02	F (B84, 28Q)	RH	10285882
	8–C9	8.132	MOLDING, F/FDR CTR RR (SAPPHIRE)	00–02	F (B84, 28Q)	LH	10285883
	8–C9	8.132	MOLDING, F/FDR CTR RR (PEWTER)	00–02	F (B84, 11Q)	RH	10400715
	8–C9	8.132	MOLDING, F/FDR CTR RR (PEWTER)	00–02	F (B84, 11Q)	LH	10400715
	8–C9	8.132	MOLDING, F/FDR CTR RR (RED)	00–02	F (B84, 44Q)	RH	10413020
	8–C9	8.132	MOLDING, F/FDR CTR RR (RED)	00–02	F (B84, 44Q)	LH	10413021
	8–C9	8.132	MOLDING, F/FDR CTR RR (ORANGE)	00–02	F (B84, 71Q)	RH	10426730
	8–C9	8.132	MOLDING, F/FDR CTR RR (ORANGE)	00–02	F (B84, 71Q)	LH	10426731
30.	8–C9	8.131	BOLT, F/FDR (M6X1X25, 23, 17 OD) (8.900)	00–02	F	6	11516413
31.	8–C12	8.153	LINER, FRT W/H	00–02	F	RH	10296525
	8–C12	8.153	LINER, FRT W/H	00–02	F	LH	10296526
32.	8–C12	8.153	RETAINER, FRT W/H LNR (BLACK) (PUSH IN W/SCREW) (6.3MM DIA X 23MM) (1.276)	00–02	F	2	20664092
33.		8.977	BOLT, SCR HEX W/FLAT WA 12 DIA TYPE AB (FRT W/H PNL LNR)	00–02		8	11509374
34.		8.977	SCREW, 6.3X1.81X20 (FRT W/H PNL)	00–02		4	11509051
35.	8–C12	8.153	CAP, FRT W/H LNR BOLT	00–02	F	3	14070933
36.		8.900	BOLT, (F/FDR)	00–02	F	6	20351035
37.	8–C9	8.131	BOLT, F/FDR (SCREW–HEX HD W/SHLDR WA, M6X1X25, 23.75, 6010M, 6138M)	00–02	F	8	10285725
38.	8–C12	8.141	PLATE, F/FDR LWR BODY MT	00–02	F	RH	10409246
	8–C12	8.141	PLATE, F/FDR LWR BODY MT	00–02	F	LH	10409247

cardiagn.com

39.	8–C9	8.131	**BOLT**, F/FDR (M6X1.0X26 HEX) (8.900)	00–02	F	2	10409170
40.		N.S.	**NUT**, RAD AIR LWR DFL (PART OF 44)				
41.		8.977	**SCREW**, HEX TAP M6.3X1.81X20 W/FL WA PH ORG (RAD AIR LWR DFL)	00–02		12	11504037
42.	8–M15	1.272	**DEFLECTOR**, RAD AIR LWR	00–02	F	1	10229657
43.	8–A28	7.833	**RETAINER**, FRT BPR FASCIA LWR DFL (2.483)	00–02	F	2	14101262
44.	8–A28	7.833	**DEFLECTOR**, F/END FASCIA OTR (INCLS 40)	00–02	F	RH	10297290
	8–A28	7.833	**DEFLECTOR**, F/END FASCIA OTR (INCLS 40)	00–02	F	LH	10297291
45.		8.977	**SCREW**, 6.3X1.81X20 (FRT BPR FASCIA LWR DFL)	00–02		8	11509051
46.		8.900	**BOLT ASM**, HEX W/CON WA, M6X1X25, 17 OD, FULL THD, AC PT, 9.8, CD CHROMATE BLK (F/FDR LWR BODY MT PLT)	00–02	F	4	11509363
47.	8–N4	2.726	**SUPPORT**, HDLP	00–02	F	RH	10414795
	8–N4	2.726	**SUPPORT**, HDLP	00–02	F	LH	10414795
48.		8.900	**BOLT**, HEX W/CON WA, M6X1X20 (HDLP SUPT)	00–02		8	11514623
49.	8–N4	2.726	**SUPPORT**, HDLP (INNER) (W/WELD STUDS REQS "2" NUTS)	00–02	F	RH	10276145
	8–N4	2.726	**SUPPORT**, HDLP (INNER) (W/WELD STUDS REQS "2" NUTS)	00–02	F	LH	10276146
50.		8.900	**BOLT**, HEX W/CON WA, M6X1X20 (HDLP HSG PNL BRKT)	00–02	F	2	11514623
51.	8–N4	2.726	**BRACKET**, HDLP BRKT (UPPER)	00–02	F	RH	10290655
	8–N4	2.726	**BRACKET**, HDLP BRKT (UPPER)	00–02	F	LH	10290656
52.	8–N4	2.726	**BRACKET**, HDLP	00–02	F	RH	10418137
	8–N4	2.726	**BRACKET**, HDLP	00–02	F	LH	10418138
53.		8.917	**NUT**, HEX W/CON WA 6X1X5.5 16–OD ZP 9 (HDLP SUPT)	00–02	F	4	11517293
54.	8–N4	2.726	**BRACKET**, HDLP (LOWER, W/NUT)	00–02	F	RH	10290657
	8–N4	2.726	**BRACKET**, HDLP (LOWER, W/NUT)	00–02	F	LH	10290658
55.		8.917	**NUT**, HEX W/CON WA 6X1X5.5 16–OD ZP 9	00–02	F	4	11517293
56.	8–A28	7.833	**SUPPORT**, FRT BPR FASCIA CTR	00–02	F	1	10276561
57.	8–A28	7.833	**BOLT**, FRT BPR FASCIA CTR SUPT (M6X1X18) (1.060)	00–02	F	2	52464988
58.	8–C7	8.024	**BUMPER**, HOOD ADJ FRT (24.42X28.20X40.00)	00–02	F	2	10413888
59.		8.900	**BOLT**, HEX W/CON WA, M6X1X20 (HDLP HSG PNL UPR BRKT)	00–02	F	2	11514623
60.	8–N4	2.726	**BRACKET**, HDLP HSG PNL UPR	00–02	F	1	10247777
61.		8.900	**BOLT**, HEX W/LG FL WA M6.3X1.81X25 POR (HOOD PRIM LAT SUPT)	00–02		3	11507083
62.	8–C8	8.080	**SUPPORT**, HOOD PRIM LAT	00–02	F	1	10247776

cardiagn.com

63.		8.900	**BOLT**, HEX W/WA, M8X1.25X20, 8.8, PC (HOOD PRIM LAT)	00–02	.....	1	11504611
64.	8–C8	8.080	**LATCH**, HOOD PRIM	00–02	F	1	16632816
65.	8–C8	8.080	**NUT**, HOOD PRIM LAT SUPT (M6.3 X 1.81) (2.485)	00–02	F	1	10079170
66.	8–N5	2.815	**CONNECTOR**, HORN (GREY) (2–WAY F, M/P 150 SLD W/LEADS) (4.710) (AC–DELCO #PT1357)	00	F	2	15306302
	8–N5	2.815	**CONNECTOR**, HORN (LT GREY) (2–WAY F150) (FSU–12116958 FOR NON–WHL SPD SENSOR APPLICATIONS ONLY) (2.535) ...	00–02	F (L36)	1	12052644
	8–N5	2.815	**CONNECTOR**, HORN (BLACK) (6–WAY F) (W/O LEADS) (3.900)	00–02	F	1	12110541
67.	8–N5	2.810	**HORN KIT**, GENERIC (HIGH NOTE) (BRKT KIT INCLUDED) (AC–DELCO #D1921C)	00–02	F	1	12368061
	8–N5	2.810	**HORN KIT**, GENERIC (LOW NOTE) (BRKT KIT INCLUDED) (AC–DELCO #D1920C)	00–02	F	1	12368062
68.		8.977	**SCREW**, HEX SER WA HD TAP M8–1.25X20 (HORN)	00–02	.....	2	11501812
69.		8.917	**NUT**, HEX W/CON WA M6X1X5.5, 24–OD 9 PEOR (HOOD PRIM LAT BRKT) (8.915)	00–02	F	AR	11508388
70.		8.900	**SCREW**, HEX M6X1X25 W/CON WA 9.8 POR (F/FDR BRKT)	00–02	.....	2	11503982
71.	8–C12	8.141	**BRACKET**, F/FDR	00–02	F	2	10414405
72.		8.900	**SCREW**, HEX M6X1X25 W/CON WA 9.8 POR (F/FDR BRKT)	00–02	.....	2	11503982
73.	8–C8	8.075	**CLIP**, HOOD PRIM LAT REL CBL (7MM) (NYLON) (8.077)	00–02	F	1	20087231
74.		8.915	**NUT**, HFH, 10X1.5 6H THD, 21.3 OD, 9.8 THK 13 HEX DR, GRD 9, ZF (HOOD STRUT) (8.917)	00–02	.....	2	10255857
75.	8–C8	8.083	**BOLT**, HOOD SECD LAT (M6X1X25, 23, 17 OD) (8.900) ...	00–02	F	2	11516413
76.	8–C8	8.083	**LATCH**, HOOD SECD	00–02	F	1	10405538
77.		8.900	**BOLT–HEX**, M8X1.25X30, 22 THD, 24MM OD, 9.8, 7114M (HOOD PRIM LAT STKR)	00–02	.....	2	11516594
78.	8–C8	8.080	**STRIKER**, HOOD PRIM LAT	00–02	F	1	16629012

RPO DEFINITIONS

B84 – ORNAMENTATION,EXTERIOR,BODY SIDE MOLDING
L36 – ENGINE GAS, 6 CYL, 3.8K, MFI, V6, HO (ERV6 SERIES)
WU8 -- SALES PACKAGE Z28 SS UPFITTER
Z28 – SPECIAL PERFORMANCE PACKAGE,(MERCHANDISING OPTION)
Z4C – APPEARANCE PACKAGE 35TH ANNIVERSARY
10Q – MOLDING COLOR,ARCTIC WHITE
11Q – MOLDING COLOR,WHITE
13Q – MOLDING COLOR,SILVER METALLIC
28Q – MOLDING COLOR,BLACK SAPPHIRE METALLIC
41Q – MOLDING COLOR,BLACK
44Q – MOLDING COLOR EXTERIOR,MED RED METALLIC(00)
71Q – MOLDING COLOR,SUNSET ORANGE METALLIC(01)
79Q – MOLDING COLOR – MYSTIC TEAL PEARL
81Q – MOLDING COLOR – BRIGHT RED

cardiagn.com

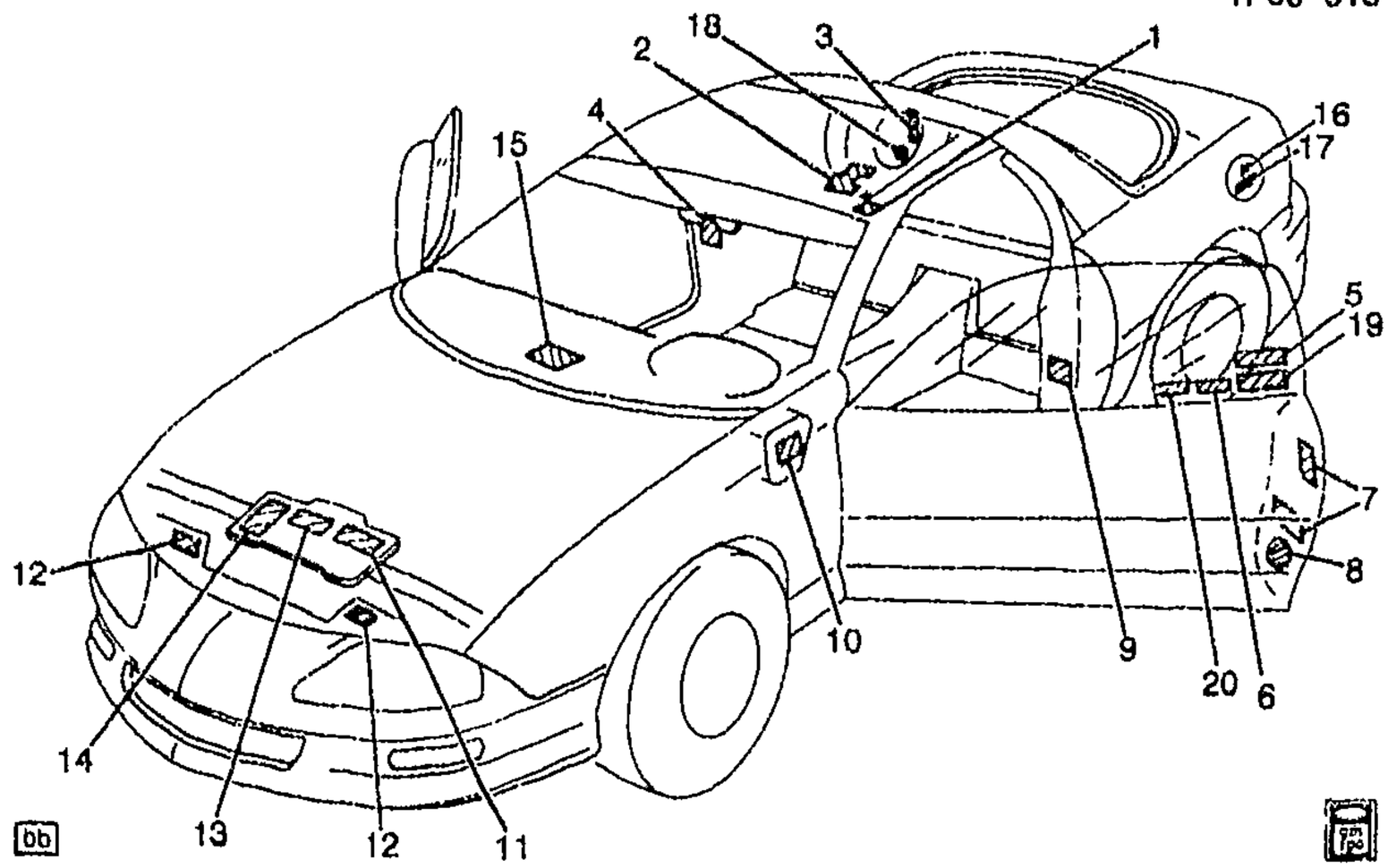

1F08-013

1993-1999 F LABELS

1.	8-C13	8.808	LABEL, JK CAUTION	93-99	F	1	21011879
2.	8-C13	8.808	LABEL, JK USAGE	93-99	F	1	10261236
3.		DISCON	LABEL, COMPACT SPA NTC	93-99	F (G80)	1	10215429
4.		N.S.	LABEL, ANTI LK BRK SYS INFO				
5.		N.S.	LABEL, FASTEN ST BELT				
6.	8-C13	8.808	LABEL, THEFT DTRNT SYS (PKG INCLS 2 LBLS)	93-96	F (UN6, UU8)	1	10080835
	8-C13	8.808	LABEL, THEFT DTRNT SYS	93	F (U1T)	2	10098795
	8-C13	8.808	LABEL, THEFT DTRNT SYS	94-96	F (U1C, U1T)	2	10098795
	8-C13	8.808	LABEL, THEFT DTRNT SYS	97	F	1	10098795
	8-C13	8.808	LABEL, THEFT DTRNT SYS	98-99	F	2	25675492
7.		N.S.	LABEL, VEH CERT & TIRE PRESS (AVAILABLE THROUGH YOUR GM DIVISIONAL ZONE OFFICE)				
8.		N.S.	LABEL, CANADIAN NATIONAL SAFETY MARK (AVAILABLE THROUGH YOUR GM DIVISIONAL ZONE OFFICE)				
9.	8-C13	8.808	LABEL, ODOM SERV NTC (75 MM SQUARE) (FOR USE WHEN ODOMETER OR CLUSTER IS SERVICED)	93-99	F (STE)	AR	52365061
10.		DISCON	LABEL, I/P WRG HARN FUSE BLK IDENT	93	F	1	10223551
	8-C13	8.808	LABEL, I/P WRG HARN FUSE BLK IDENT	94-95	F	1	10247837
		N.S.	LABEL, I/P WRG HARN FUSE BLK IDENT (PART OF I/P DOOR)	96-99		1	
11.	8-C13	8.808	LABEL, VEH EMIS CONT INFO (JKC)	97	F (L36, NB6, NF2) (EXC K29, Z49)	1	24505099

cardiagn.com

8-C13	8.808	**LABEL**, VEH EMIS CONT INFO (AAA)	97	F (LT1, NF2) (EXC K29, NM8, Z49)	1	12556535
8-C13	8.808	**LABEL**, VEH EMIS CONT INFO (AAB)	97	F (LT1, K29, NF2) (EXC NM8)	1	12556536
8-C13	8.808	**LABEL**, VEH EMIS CONT INFO (AAC)	97	F (LT1, NB6)	1	12556537
8-C13	8.808	**LABEL**, VEH EMIS CONT INFO (BFA)	99	F (L36, NF2) (EXC K29, K71, NM8)	1	24507080
8-C13	8.808	**LABEL**, VEH EMIS CONT INFO (BRN)	96	F (L36, NB6, NF2) (EXC K29, Z49)	1	24504566
8-C13	8.808	**LABEL**, VEH EMIS CONT INFO (CAF)	96	F (LT1, NF2, NB6)	1	12553941
8-C13	8.808	**LABEL**, VEH EMIS CONT INFO (CKJ)	96	F (LT1, NM8)	1	12555993
8-C13	8.808	**LABEL**, VEH EMIS CONT INFO (FJS)	98	F (LS1, NF2) (EXC NM8, K71, K29)	1	12559750
8-C13	8.808	**LABEL**, VEH EMIS CONT INFO (FJT)	98	F (LS1, NB6) (EXC K71)	1	12559751
8-C13	8.808	**LABEL**, VEH EMIS CONT INFO (ID: BFC, 2ND DES SEE 12563688)	99	F (L36, NB7) (EXC K29, NM8, Z49) (1ST DES)	1	24507081
8-C13	8.808	**LABEL**, VEH EMIS CONT INFO (ID: BFD, 1ST DES SEE 24507081)	99	F (L36, NB7) (EXC K29, NM8, Z49) (2ND DES)	1	12563688
8-C13	8.808	**LABEL**, VEH EMIS CONT INFO (LAA)	99	F (LS1, NF2) (EXC K29, K71)	1	12560551
8-C13	8.808	**LABEL**, VEH EMIS CONT INFO (LAB)	99	F (LS1, NB7) (EXC K29, K71, Z49)	1	12560552
8-C13	8.808	**LABEL**, VEH EMIS CONT INFO (NFA)	95	F (L32, M30, NA5) (EXC NN5)	1	24504073
8-C13	8.808	**LABEL**, VEH EMIS CONT INFO (NFA)	98	F (L36, NF2) (EXC K29, NM8, K71)	1	24505102
8-C13	8.808	**LABEL**, VEH EMIS CONT INFO (NFC)	98	F (L36, NB6) (EXC K29, NM8)	1	24505103
8-C13	8.808	**LABEL**, VEH EMIS CONT INFO (NFD)	95	F (L32, M30, NN5)	1	24504074
8-C13	8.808	**LABEL**, VEH EMIS CONT INFO (NFK)	95	F (L32, M49, NA5) (EXC NN5)	1	24504075
8-C13	8.808	**LABEL**, VEH EMIS CONT INFO (NFR)	95	F (L32, M49, NN5)	1	24504076
8-C13	8.808	**LABEL**, VEH EMIS CONT INFO (NRN)	95	F (L36, NF2) (EXC NM8)	1	24504208
8-C13	8.808	**LABEL**, VEH EMIS CONT INFO (NRS)	95	F (L36, NB6) (EXC NM8)	1	24504500
	DISCON	**LABEL**, VEH EMIS CONT INFO (RDM)	93	F (L32, MD8, NA5)	1	10189445
	DISCON	**LABEL**, VEH EMIS CONT INFO (RDN)	93	F (L32, MD8, NB2)	1	10189446
	DISCON	**LABEL**, VEH EMIS CONT INFO (RDP)	93	F (L32, M49, NB2)	1	10189447
	DISCON	**LABEL**, VEH EMIS CONT INFO (RKP)	93	F (L32, M49, NA5)	1	10210481
	DISCON	**LABEL**, VEH EMIS CONT INFO (RLP)	93	F (LT1, MD8, NA5)	1	10224332
	DISCON	**LABEL**, VEH EMIS CONT INFO (RLR)	93	F (LT1, M28, M29) (EXC NN5)	1	10224333
	DISCON	**LABEL**, VEH EMIS CONT INFO (RLS)	93	F (LT1, NN5)	1	10224334

cardiagn.com

		DISCON	LABEL, VEH EMIS CONT INFO (RTL)	93	F (LT1, MD8, NB2)	1	10224335
	8-C13	8.808	LABEL, VEH EMIS CONT INFO (TBD)	94	F (L32, MM6, M49, NA5) (EXC NN5)	1	12550748
	8-C13	8.808	LABEL, VEH EMIS CONT INFO (TBF, TNS)	94	F (L32, M30, NA5)	1	12550749
	8-C13	8.808	LABEL, VEH EMIS CONT INFO (TBH)	94	F (L32, MM6, M49, NB2)	1	12550845
		DISCON	LABEL, VEH EMIS CONT INFO (TBR)	94	F (L32, M30, NB2)	1	10228625
	8-C13	8.808	LABEL, VEH EMIS CONT INFO (TMK)	94	F (LT1, M30, NA5) (EXC NM8)	1	12550698
	8-C13	8.808	LABEL, VEH EMIS CONT INFO (TML)	94	F (LT1, MM6) (EXC NM8, NN5)	1	12550699
	8-C13	8.808	LABEL, VEH EMIS CONT INFO (TMM)	94	F (LT1, MM6, NN5)	1	12550700
	8-C13	8.808	LABEL, VEH EMIS CONT INFO (TMN)	94	F (LT1, M30, NB2)	1	12550701
	8-C13	8.808	LABEL, VEH EMIS CONT INFO (TMP)	94	F (LT1, NM8)	1	12552237
	8-C13	8.808	LABEL, VEH EMIS CONT INFO (YHM)	95	F (LT1, MM6, M30, NA5) (EXC NM8, NN5)	1	12551230
	8-C13	8.808	LABEL, VEH EMIS CONT INFO (YHN)	95	F (LT1, MM6, NN5)	1	12551231
	8-C13	8.808	LABEL, VEH EMIS CONT INFO (YHP)	95	F (LT1, M30, NB6)	1	12551232
	8-C13	8.808	LABEL, VEH EMIS CONT INFO (YHR)	95	F (LT1, NM8)	1	12551233
	8-C13	8.808	LABEL, VEH EMIS CONT INFO (JKR)	97	F (L36, K29, Z49) (EXPORT)	1	24505781
	8-C13	8.808	LABEL, VEH EMIS CONT INFO (BRE)	96	F (L36, Z49) (EXPORT)	1	24505787
	8-C13	8.808	LABEL, VEH EMIS CONT INFO (BRM)	96	F (L36, K29) (EXC Z49) (EXPORT)	1	24505701
	8-C13	8.808	LABEL, VEH EMIS CONT INFO (CPJ)	96	F (LT1, Z49) (EXC NM8) (EXPORT)	1	12555484
	8-C13	8.808	LABEL, VEH EMIS CONT INFO (TBH)	94	F (L32, MM6, M49, NN5) (EXPORT)	1	12550845
12.		N.S.	LABEL, HDLP ADJ				
13.	8-C13	8.808	LABEL, GEN BELT RTG	93-95	F (LT1)	1	10105362
	8-C13	8.808	LABEL, ACSRY BELT ROUTING	93-95	F (L32)	1	10115873
	8-C13	8.808	LABEL, ACSRY BELT ROUTING	95-99	F (L36)	1	24507274
	8-C13	8.808	LABEL, ACSRY BELT ROUTING	96	F (L36, C41)	1	24504968
	8-C13	8.808	LABEL, ACSRY BELT ROUTING	99	F (LS1)	1	12560738
14.	8-C13	8.808	LABEL, FAN BLADE CAUTION	93-94	F	1	10188093
	8-C13	8.808	LABEL, FAN BLADE & INFL RST & ENG CLG & A/C REFRIG CAUTION	95	F	1	10260657
	8-C13	8.808	LABEL, FAN BLADE & INFL RST & ENG CLG & A/C REFRIG CAUTION	95-97	F	1	10288155
15.		N.S.	LABEL, SERV PART IDENT				
16.		N.S.	LABEL, FUEL MAY STAIN NTC				
17.	8-N5	3.028	LABEL, FUEL RECOMMENDATION (PREMIUM UNLEADED FUEL RECOMMENDED)	93	F (LT1)	1	10245352

cardiagn.com

							1F06–013
	8–N5	3.028	**LABEL**, FUEL RECOMMENDATION (PREMIUM UNLEADED FUEL RECOMMENDED)	94–97	F (LT1) (EXC NM8)	1	10245352
	8–N5	3.028	**LABEL**, FUEL RECOMMENDATION (PREMIUM UNLEADED FUEL RECOMMENDED)	98	F (LS1) (EXC NM8)	1	10245352
	8–N5	3.028	**LABEL**, FUEL RECOMMENDATION (PREMIUM UNLEADED FUEL RECOMMENDED)	99	F (LS1, NA3, NA7, NB7, NF2)	1	10245352
18.	8–C13	8.808	**LABEL**, SPA WHL CAUTION (NOT USED FOR 1993–1997) (SYMBOLS)	98–99	F (VA5) (EXPORT)	1	25558496
19.	8–C13	8.808	**LABEL**, INFL RST SYS INFO (USED IN 1998 ONLY) (NEXT GENERATION AIR BAG)	98	F	1	15012285
20.		N.S.	**LABEL**, ROADSIDE SERV INFO ..		.....		

RPO DEFINITIONS

C41 – HEATER,OUTSIDE AIR,WITH FAN AND DEFROSTER
G80 – AXLE,REAR,POSITRACTION,LIMITED SLIP
K29 – MODULE,POWERTRAIN CONTROL
K71 – EMISSION CONTROL,LABEL JAPAN (EXPORT)
LS1 – ENGINE GAS, 8 CYL, 5.7L, SFI, ALUMINUM ENGINE
LT1 – ENGINE–GAS, 8 CYL, 5.7L(5.7P),MFI,HO
L32 – ENGINE,3.4L,V6,(3.4S),SFI,OHV
L36 – ENGINE GAS, 6 CYL, 3.8K, MFI, V6, HO (ERV6 SERIES)
MD8 – TRANSMISSION,AUTOMATIC 4–SPEED(THM700R4/4L60)
MM6 – TRANSMISSION MAN 6 SPD, BORG WARNER, 85MM, 1ST 2.66, 6TH 0.50, O/D
M28 – TRANSMISSION MAN, 6 SPD, BORG WARNER, 85MM, 3.36 1ST, 1.35 3RD
M29 – TRANSMISSION MAN, 6 SPD, BORG WARNER, 85MM, 2.97 1ST, 1.44 3RD
M30 – TRANSMISSION,AUTOMATIC 4 SPEED,4L60E,ELECTRONIC
M49 – TRANSMISSION MAN 5 SPD, BORG WARNER, 77MM, 3.75 1ST, .76 5TH, O/D
NA3 – EMISSION SYSTEM JAPAN
NA5 – EMISSION SYSTEM,FEDERAL REQUIREMENTS
NA7 – EMISSION SYSTEM EUROPEAN
NB2 – EMISSION SYSTEM,CALIFORNIA REQUIREMENTS
NB6 – EMISSION SYSTEM CALIFORNIA,TIER 1
NB7 – EMISSION SYSTEM CALIFORNIA, TLEV
NF2 – EMISSION SYSTEM,FEDERAL,TIER 1
NM8 – EMISSION SYSTEM,LEADED FUEL(EXPORT)
NN5 – EMISSION OVERIDE,CALIFORNIA SYSTEM,FEDERAL OFFSET VEHICLE
STE – PLANT CODE– ST THERESE, PQ, GM OF CANADA
UN6 – RADIO,AM/FM STEREO,CASSETTE,ETR,INCLUDES CLOCK
UU8 – RADIO,AM/FM STEREO,CASSETTE,ETR,DELCO/BOSE,DOLBY,INCLUDES CLOCK
U1C – RADIO,AM/FM STEREO,C.D. PLAYER,ETR,INCLUDES CLOCK
U1T – RADIO AM/FM STEREO, SEEK/SCAN, COMPACT DISC, HPS, CLOCK, ETR
VA5 – LANGUAGE LABEL(ENGLISH)
Z49 – MANDATORY CANADIAN BASE EQUIPMENT MODIFICATIONS(CANADIAN)

cardiagn.com

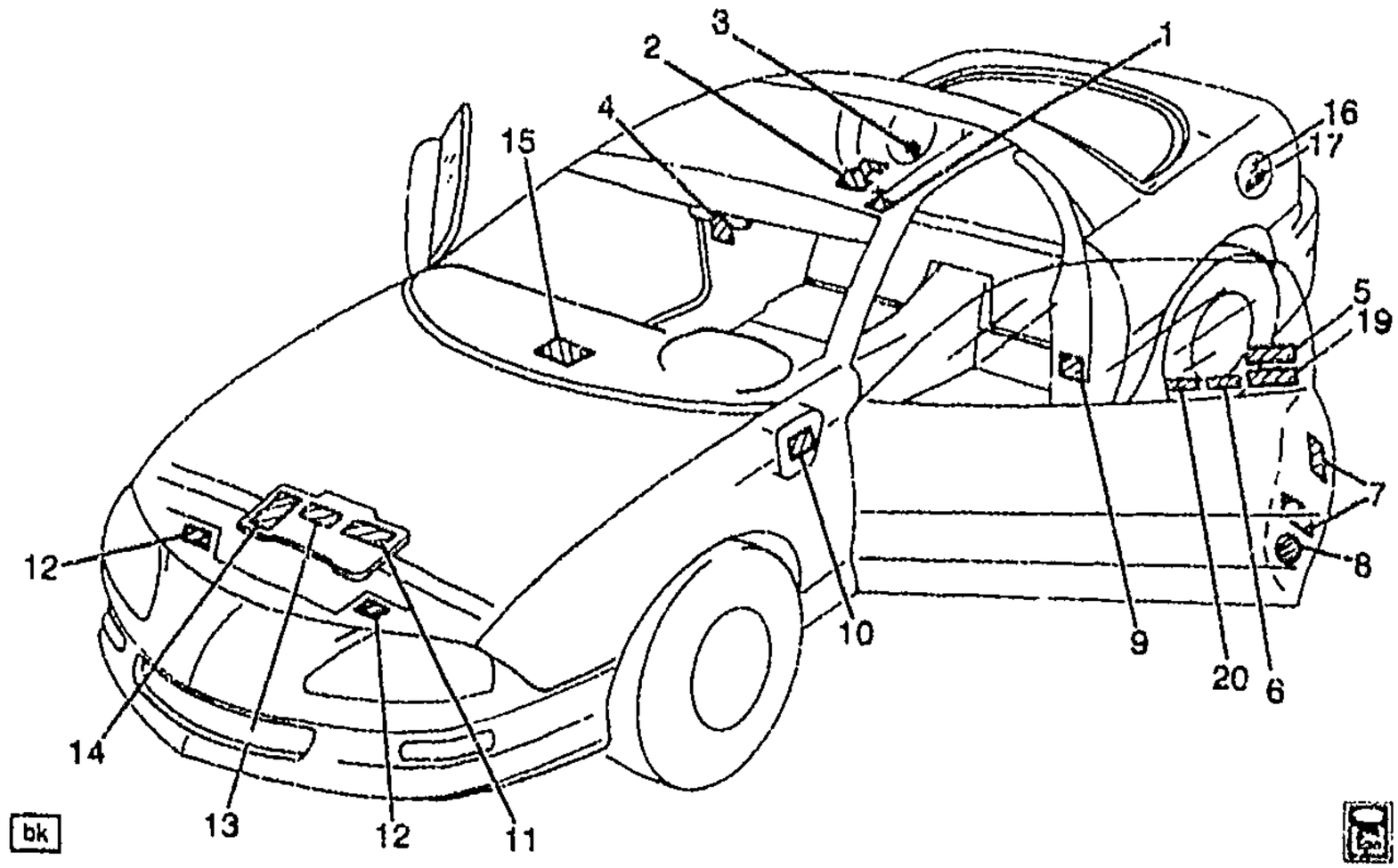

1F08-018

2000-2002 F LABELS

1.	8-C13	8.808	LABEL, JK CAUTION	00-02	F	1	21011879
2.	8-C13	8.808	LABEL, JK USAGE	00-02	F	1	10261236
3.	8-C13	8.808	LABEL, SPA WHL CAUTION (NOT USED FOR 1993-1997) (SYMBOLS)	01-02	F (VA5)	1	25559496
	8-C13	8.808	LABEL, SPA WHL CAUTION (NOT USED FOR 1993-1997) (SYMBOLS)	00-02	F (VA5) (EXPORT)	1	25558496
4.		N.S.	LABEL, ANTI LK BRK SYS INFO				
5.		N.S.	LABEL, FASTEN ST BELT				
6.	8-C13	8.808	LABEL, THEFT DTRNT SYS	00-02	F	2	25675492
7.		N.S.	LABEL, VEH CERT & TIRE PRESS (AVAILABLE THROUGH YOUR GM DIVISIONAL ZONE OFFICE)				
8.		N.S.	LABEL, CANADIAN NATIONAL SAFETY MARK (AVAILABLE THROUGH YOUR GM DIVISIONAL ZONE OFFICE)				
9.	8-C13	8.808	LABEL, ODOM SERV NTC (75 MM SQUARE) (FOR USE WHEN ODOMETER OR CLUSTER IS SERVICED)	00	F (STE)	AR	52365061
	8-C13	8.808	LABEL, ODOM SERV NTC (ENGLISH AND FRENCH)	01-02	F (STE)	AR	10443718
10.		N.S.	LABEL, I/P WRG HARN FUSE BLK IDENT (PART OF I/P DOOR)				
11.	8-C13	8.808	LABEL, VEH EMIS CONT INFO	00	F (LS1, NF2) (EXC K29)	1	12562423
	8-C13	8.808	LABEL, VEH EMIS CONT INFO	00	F (LS1, NC1) (EXC K29)	1	12562424
	8-C13	8.808	LABEL, VEH EMIS CONT INFO	00	F (L36, NF2) (EXC K29)	1	24508253
	8-C13	8.808	LABEL, VEH EMIS CONT INFO	00	F (L36, NC1) (EXC K29)	1	24508254

cardiagn.com

	8–C13	8.808	LABEL, VEH EMIS CONT INFO ..	01	F (LS1, NC1, NF7) (EXC K29)	1	12564045
	8–N6	3.670	LABEL, VEH EMIS CONT INFO (8.808)	01	F (LS1, NC1, NF7) (EXC K29)	1	12564045
	8–C13	8.808	LABEL, VEH EMIS CONT INFO ..	01	F (L36, NC1, NF7) (EXC K29, K71)	1	24508372
	8–N6	3.670	LABEL, VEH EMIS CONT INFO (8.808)	01	F (L36, NC1, NF7) (EXC K29, K71)	1	24508372
	8–C13	8.808	LABEL, VEH EMIS CONT INFO ..	02	F (LS1, NC1, NF7) (EXC K29)	1	12565729
	8–N6	3.670	LABEL, VEH EMIS CONT INFO (8.808)	02	F (LS1, NC1, NF7) (EXC K29)	1	12565729
	8–C13	8.808	LABEL, VEH EMIS CONT INFO ..	02	F (L36, NC1, NF7) (EXC K29, K71)	1	12565730
	8–N6	3.670	LABEL, VEH EMIS CONT INFO (8.808)	02	F (L36, NC1, NF7) (EXC K29, K71)	1	12565730
12.		N.S.	LABEL, HDLP ADJ		.....		
13.	8–C13	8.808	LABEL, ACSRY BELT ROUTING .	00–02	F (LS1)	1	12560730
	8–C13	8.808	LABEL, ACSRY BELT ROUTING .	00–02	F (L36)	1	24507274
14.		N.S.	LABEL, FAN BLADE CAUTION ..		.....		
		N.S.	LABEL, FAN BLADE & INFL RST & ENG CLG & A/C REFRIG CAUTION		....		
15.		N.S.	LABEL, SERV PART IDENT		.....		
16.		N.S.	LABEL, FUEL MAY STAIN NTC ..		....		
17.	8–N5	3.028	LABEL, FUEL RECOMMENDATION (PREMIUM UNLEADED FUEL RECOMMENDED)	00	F (LS1, NA3, NA7, NC1, NF2)	1	10245352
	8–N5	3.028	LABEL, FUEL RECOMMENDATION (PREMIUM UNLEADED FUEL RECOMMENDED)	01–02	F (LS1, NA3, NC1, NF7, NT3)	1	10245352
19.		N.S.	LABEL, INFL RST SYS INFO (USED IN 1998 ONLY)		.....		
20.		N.S.	LABEL, ROADSIDE SERV INFO ..		.....		

RPO DEFINITIONS

K29 – MODULE,POWERTRAIN CONTROL
K71 – EMISSION CONTROL,LABEL JAPAN (EXPORT)
LS1 – ENGINE GAS, 8 CYL, 5.7L, SFI, ALUMINUM ENGINE
L36 – ENGINE GAS, 6 CYL, 3.8K, MFI, V6, HO (ERV6 SERIES)
NA3 – EMISSION SYSTEM JAPAN
NA7 – EMISSION SYSTEM EUROPEAN
NC1 – EMISSION SYSTEM CALIFORNIA, LEV
NF2 – EMISSION SYSTEM,FEDERAL,TIER 1
NF7 – EMISSION SYSTEM FEDERAL, NLEV
NT3 – EMISSION SYSTEM EEC 00
STE – PLANT CODE– ST THERESE, PQ, GM OF CANADA
VA5 – LANGUAGE LABEL(ENGLISH)

cardiagn.com

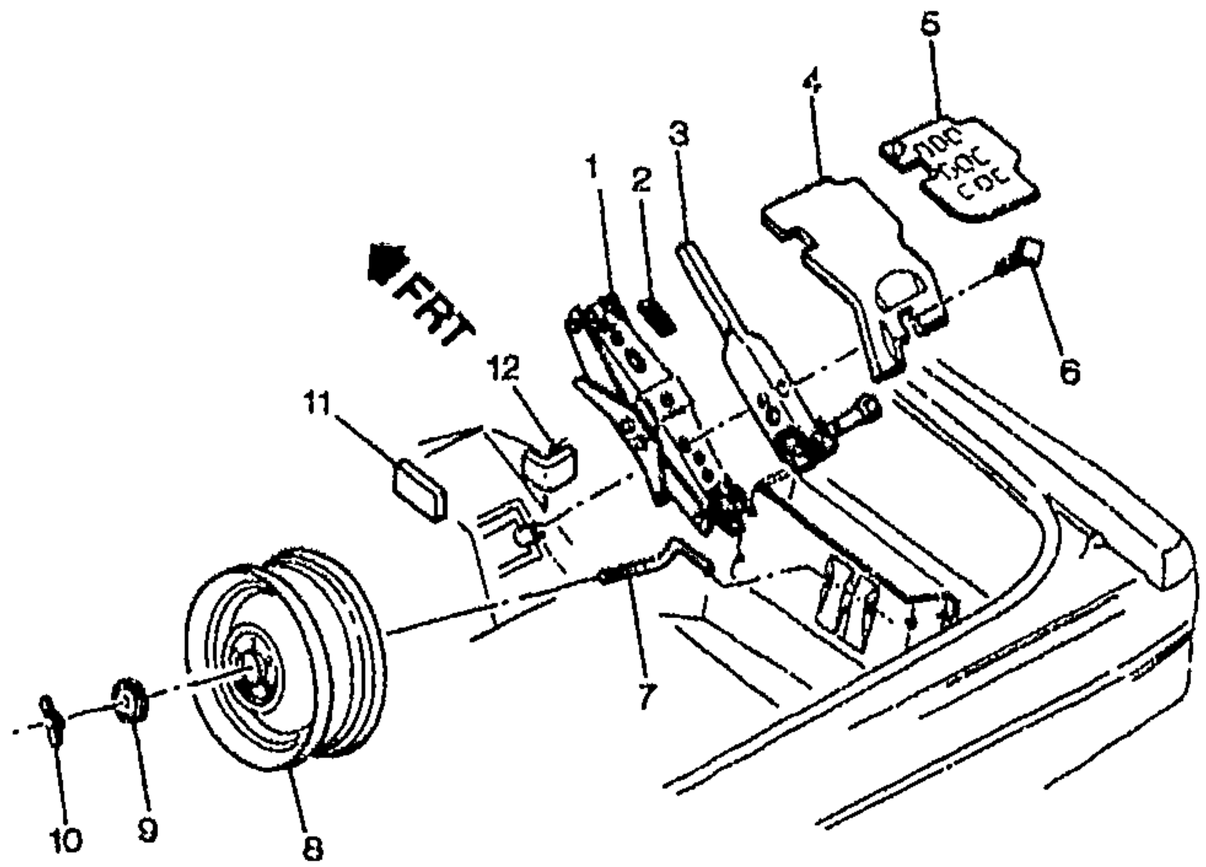

MF08-016

1993-2002 F SPARE WHEEL STOWAGE & JACK PARTS

1.	8-C18	8.820	JACK,	93-02	F	1	10223328
2.	8-C13	8.808	LABEL, JK CAUTION	93-02	F	1	21011879
3.	8-C18	8.821	HANDLE, JK/WHL WRENCH	93-02	F	1	25606055
4.	8-C18	8.820	COVER, JK STOW (INCLS 5)	93-02	F	1	10261237
5.	8-C13	8.808	LABEL, JK USAGE (PART OF 4)	93-02	F	1	10261236
6.	8-C18	8.820	BOLT, JK STOW	93-02	F	1	10208513
7.	8-A26	7.632	BOLT, SPA WHL STOW (M8X1.25X195)	93-96	F	1	10042601
	8-A26	7.632	BOLT, SPA WHL STOW	97-02	F	1	10206120
8.	8-N27	5.803	WHEEL, 15X4 COMPACT SPA	93-96	F	1	9591849
	8-N27	5.803	WHEEL, 16X4 COMPACT SPA	97-02	F	1	9592913
9.	8-A26	7.632	ADAPTER, SPA WHL STOW	93-02	F	1	14030631
10.	8-A26	7.633	NUT, SPA WHL STOW (ROUND, BLACK PLASTIC) (USE IN PLC OF PRODUCTION MET WING NUT)	93-02	F	1	14071288
11.		N.S.	INSULATOR, JK STOW				
12.		N.S.	INSULATOR, JK STOW				

cardiagn.com

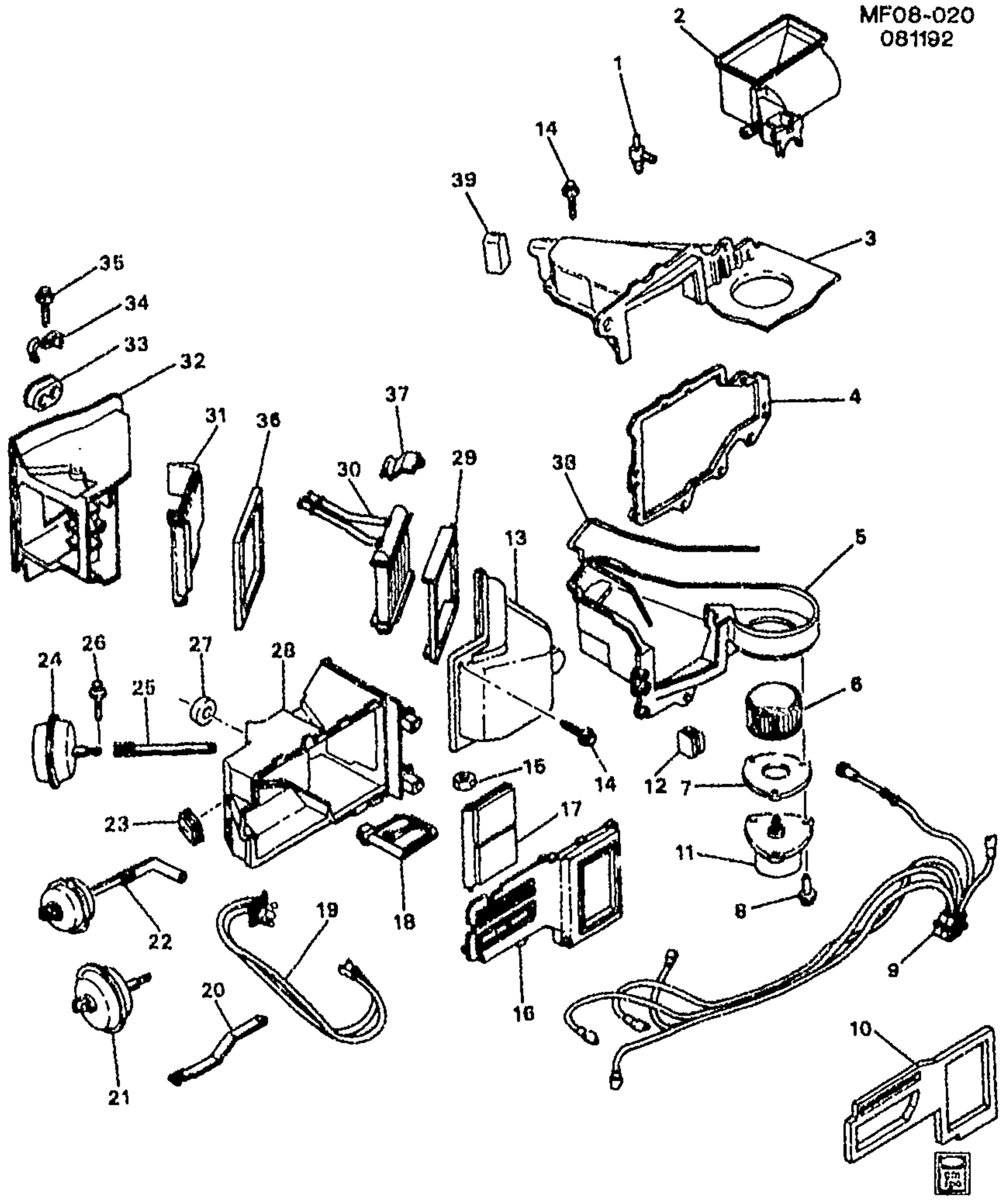

MF08-020

1993-1996 F HEATER & BLOWER ASM (C41)

1.	8-D23	9.280	VALVE, HTR & A/C CONT VAC (STAMPED 6648) (3.885) (AC-DELCO #14056648)	93-96	F	1	14056648
2.	8-E17	9.782	INLET, AIR (W/SEAL) (9.786)	93-96	F (C41)	1	52458728
3.	8-D14	9.211	CASE, AUX A/C EVPR & BLO UPR	93-96	F	1	52458965
4.	8-D14	9.211	SEAL, A/C EVPR & BLO MDL	93-96	F	1	52481317
5.	8-D14	9.211	CASE, AUX A/C EVPR & BLO LWR	93-96	F	1	52458976

cardiagn.com

6.	8-C21	8.857	**IMPELLER**, BLO (PART OF 11) (AC-DELCO #15-8761)	93-96	F (C41)	1	52472650
7.	8-C21	8.856	**INSULATOR**, BLO MOT (9.216) ..	93-96	F	1	3091179
8.		N.S.	**BOLT**, HTR & BLO MDL		.....		
9.	8-D23	9.281	**HARNESS**, AIR VLV ACTR VAC ..	93-96	F (C41)	1	52458911
10.	8-E17	9.786	**SEAL**, AIR DISTR CASE	93-96	F (C41)	1	52464968
11.	8-C21	8.855	**MOTOR**, BLO (W/IMPLR) (INCLS 6) (AC-DELCO #15-8760)	93-96	F (C41)	1	52481553
	8-D15	9.215	**MOTOR**, BLO (W/IMPLR) (INCLS 6) (8.855) (AC-DELCO #15-8760)	93-96	F (C41)	1	52481553
12.	8-D20	9.275	**SEAL**, A/C REFRIG TEMP SEN (9.211)	93-96	F	1	52461203
13.	8-C20	8.854	**CASE**, HTR RR (9.211)	93-96	F	1	52458960
14.		8.977	**BOLT-HFH**, M4.2X1.4X13, 11.6THD, 8.5OD, GM6010-M, POR, TAP (HTR & BLO MDL) (AC-DELCO #11508256)	93-96	.....	AR	11508256
15.		8.921	**NUT-PUSH ON SPRING** FOR .153 TO .159 INCH DIA STUD, .70 OD, .35 THK, SAE1050 CRB .SPR .STL, P[illegible] (AIR INL VLV LINK) (AC-[illegible]LCO #11501937)	93-96	.....	1	11501937
16.	8-C20	8.854	**CASE**, HTR (RR)	93-96	F (C41) (CVR)	1	52458712
17.	8-E17	9.786	**VALVE**, MODE (W/SHF) (INCLS 20, 25) (W/LINK)	93-94	F	1	52472426
	8-E17	9.786	**VALVE**, MODE (W/SHF) (UPR) (BI-LVL) (INCLS 20, 25) (W/LINK)	95-96	F (C41)	1	52472426
18.	8-C21	8.858	**VALVE**, TEMP (9.280) (AC-DELCO #15-5624)	95-96	F	1	52458714
	8-C21	8.858	**VALVE**, TEMP (& DEFR W/SPR) (9.280) (AC-DELCO #15-5624)	93-94	F	1	52458714
19.	8-D15	9.215	**RESISTOR**, BLO MOT (HTR ELEC) (9.275) (AC-DELCO #52467191)	93-96	F	1	52467191
20.	8-E17	9.786	**VALVE**, MODE (W/SHF) (PART OF 17) (W/LINK)	93-94	F	1	52472426
	8-E17	9.786	**VALVE**, MODE (W/SHF) (UPR) (BI-LVL) (PART OF 17) (W/LINK) .	95-96	F (C41)	1	52472426
21.	8-D23	9.280	**ACTUATOR**, MODE VLV (AC-DELCO #15-71975)	93-96	F	1	1996798
22.	8-D23	9.280	**ACTUATOR**, DEFR VLV (AC-DELCO #15-71976)	93-96	F (C41)	1	1996799
23.	8-E17	9.779	**SEAL**, DEFR VLV LINK	93-96	F (C41)	1	52458627
24.	8-D23	9.280	**ACTUATOR**, MODE VLV (AC-DELCO #15-71579)	93-95	F	1	1996747
	8-D23	9.280	**ACTUATOR**, MODE VLV (SNAP IN TYPE, BI-LVL VAC) (AC-DELCO #15-71579)	96	F (C41)	1	1996747
25.	8-E17	9.786	**VALVE**, MODE (W/SHF) (PART OF 17) (W/LINK)	93-94	F	1	52472426
	8-E17	9.786	**VALVE**, MODE (W/SHF) (UPR) (BI-LVL) (PART OF 17) (W/LINK) .	95-96	F (C41)	1	52472426
26.		8.977	**SCREW**, HWH TAP M4.2X1.41X16 9.2-OD DRILPT BLK PZOR (MODE)	93-96	.....	AR	11509135
27.	8-C21	8.858	**SEAL**, TEMP VLV HSG (DA STUD TO FRT CASE) (9.786)	93-96	F (C41)	1	52462555

© 2001 GENERAL MOTORS SERVICE PARTS OPERATIONS, CHEVROLET, INC.

cardiagn.com

							MF08-020
28.	8-E17	9.786	**CASE**, AIR DISTR (FRT)	93-96	F (C41)	1	52458713
29.	8-C20	8.854	**SEAL**, HTR CORE (SI SEAL USED T/W 2 OF 52472456 TOP & BTM SEAL) (208.0X10.0X6.0) (9.211)	93-96	F	2	52455414
	8-C20	8.854	**SEAL**, HTR CORE (SI SEAL USED T/W 2 OF 52455414 TOP & BTM SEAL)	93-96	F	2	52472456
30.	8-C20	8.854	**CORE**, HTR (AC-DELCO #15-60051)	93-96	F	1	52468039
31.	8-C21	8.858	**VALVE**, TEMP	93-96	F (C41)	1	52458709
32.	8-C20	8.854	**CASE**, HTR FRT (TEMP VLV)	93-96	F (C41)	1	52458898
33.	8-C20	8.854	**SEAL**, HTR CORE TUBE	93-96	F	1	52458961
34.	8-C18	8.846	**CLAMP**, HTR CORE TUBE	93-96	F (C41)	1	52461638
35.		8.977	**BOLT-HFH**, M4.2X1.4X13, 11.6THD, 8.5OD, GM6010-M, POR, TAP (AC-DELCO #11508256)	93-96	.....	AR	11508256
36.	8-C20	8.854	**SEAL**, HTR CORE SHRD	93-96	F (C41)	1	52458941
37.	8-C20	8.854	**CLAMP**, HTR CORE	93-96	F (C41)	1	3092066
38.	8-D14	9.211	**GASKET**, A/C EVPR & BLO MDL .	93-96	F	1	52470041
39.	8-D14	9.211	**SEAL**, A/C EVPR (CASE PLUG) ..	93-96	F (C41)	1	52461976

RPO DEFINITIONS

C41 – HEATER,OUTSIDE AIR,WITH FAN AND DEFROSTER

cardiagn.com

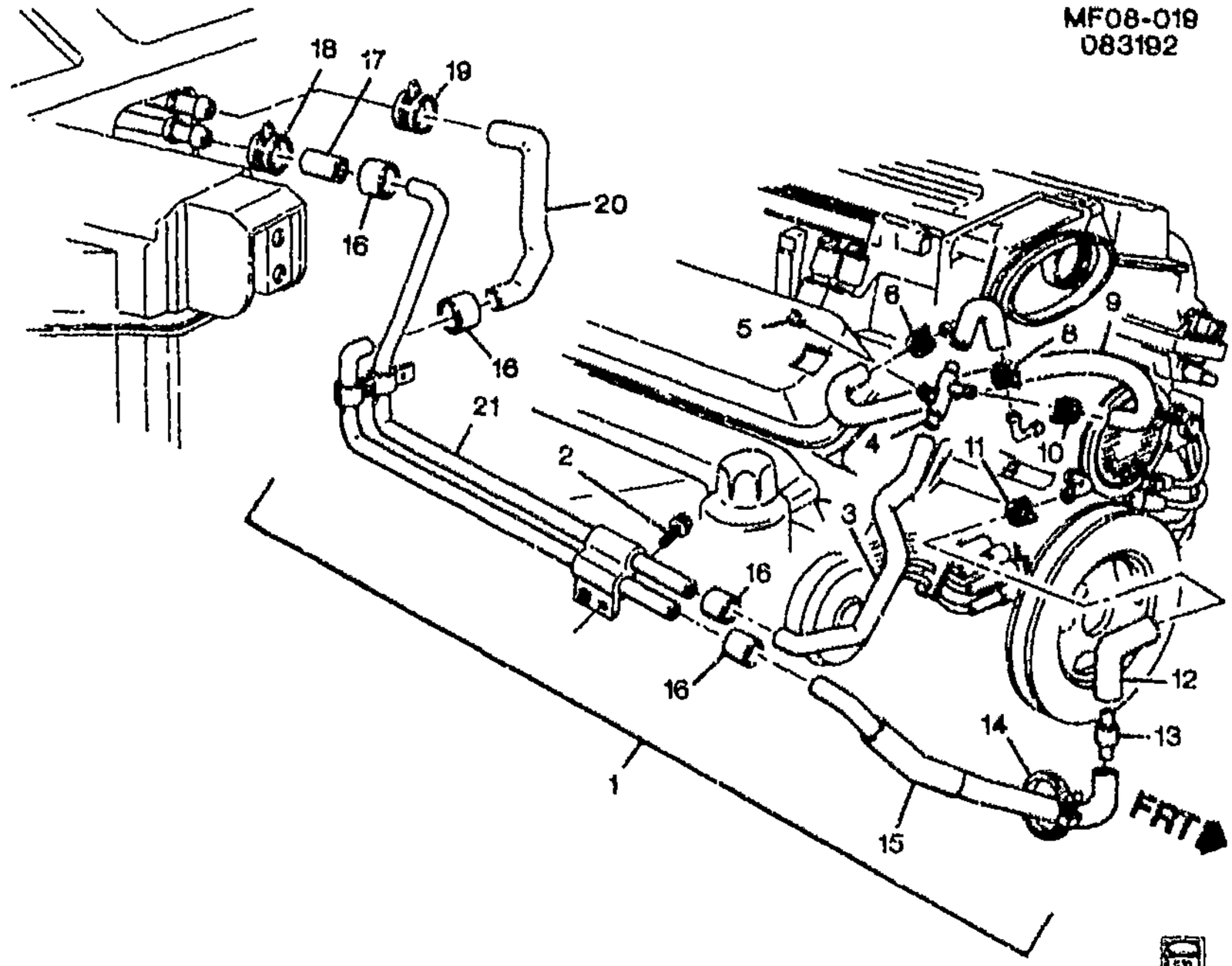

MF08-019

1993–1994 F HOSES & PIPES/HEATER (LT1/5.7P)

1.	8–C18	8.846	HOSE, HTR INL & OTLT (INCLS 3–5, 7, 12–17, 20, 21)	93–94	F (LT1)	1	10236039
2.		8.900	BOLT, HFH M8X1.25X18 (HTR INL & OTLT PIPE)	93–94	F	1	11513703
3.	8–C18	8.846	HOSE, HTR OTLT FRT (TO BLEEDER VLV) (PART OF 1)	93–94	F (LT1)	1	10170163
4.	8–C18	8.846	CONNECTOR, HTR OTLT HOSE (PART OF 1)	93–94	F (LT1)	1	10215998
5.	8–C18	8.846	VALVE, HTR AIR BL (PART OF 1) (1.035)	93–94	F (LT1)	1	10070107
6.		8.948	CLAMP, WORM GEAR, 1/2–13/16 (THROT BODY HTR HOSE)	93–94	F	1	22527587
7.	8–C18	8.846	HOSE, HTR OTLT FRT (PART OF 1)	93–94	F (LT1)	1	10215999
8.	8–C18	8.846	CLAMP, HTR OTLT FRT HOSE (8.948)	93–94	F	1	25665982
9.	8–N6	3.337	HOSE, THROT BODY HTR OTLT	93–94	F (LT1)	1	10188002
10.		8.948	CLAMP, WORM GEAR, 1/2–13/16 (HTR OTLT FRT HOSE)	93–94	F	1	22527587
11.	8–C18	8.846	CLAMP, HTR INL FRT HOSE (BLACK) (8.948)	93–94	F	1	10108255
12.	8–C18	8.846	HOSE, HTR INL FRT (PART OF 1)	93–94	F (LT1)	1	10188037

cardiagn.com

							MF08-019
13.	8-C21	8.866	VALVE, HTR WAT FLOW CONT (PART OF 1) (AC-DELCO #15-5511)	93-94	F (LT1)	1	10188036
	8-E18	9.795	VALVE, HTR WAT FLOW CONT (PART OF 1) (8.866) (AC-DELCO #15-5511)	93-94	F (LT1)	1	10188036
14.	8-C18	8.846	STRAP, HTR INL HOSE (PART OF 1)	93-94	F (LT1)	1	10209522
15.	8-C18	8.846	HOSE, HTR INL FRT (PART OF 1)	93-94	F (LT1)	1	10146991
16.		N.S.	COUPLING, HTR INL & OTLT HOSE (CRIMP FIT) (PART OF 1) .		.....		
17.		N.S.	HOSE, HTR OTLT RR (PART OF 1)		.....		
18.	8-C18	8.846	CLAMP, HTR OTLT RR HOSE (8.948)	93-94	F	1	25665982
19.	8-C18	8.846	CLAMP, HTR INL RR HOSE (BLACK) (8 948)	93-94	F	1	10108255
20.	8-C18	8.846	HOSE, HTR INL RR (PART OF 1) .	93-94	F	1	10146992
21.		N.S.	PIPE, HTR INL & OTLT (PART OF 1)		.....		

RPO DEFINITIONS
LT1 – ENGINE–GAS, 8 CYL, 5.7L(5.7P),MFI,HO

cardiagn.com

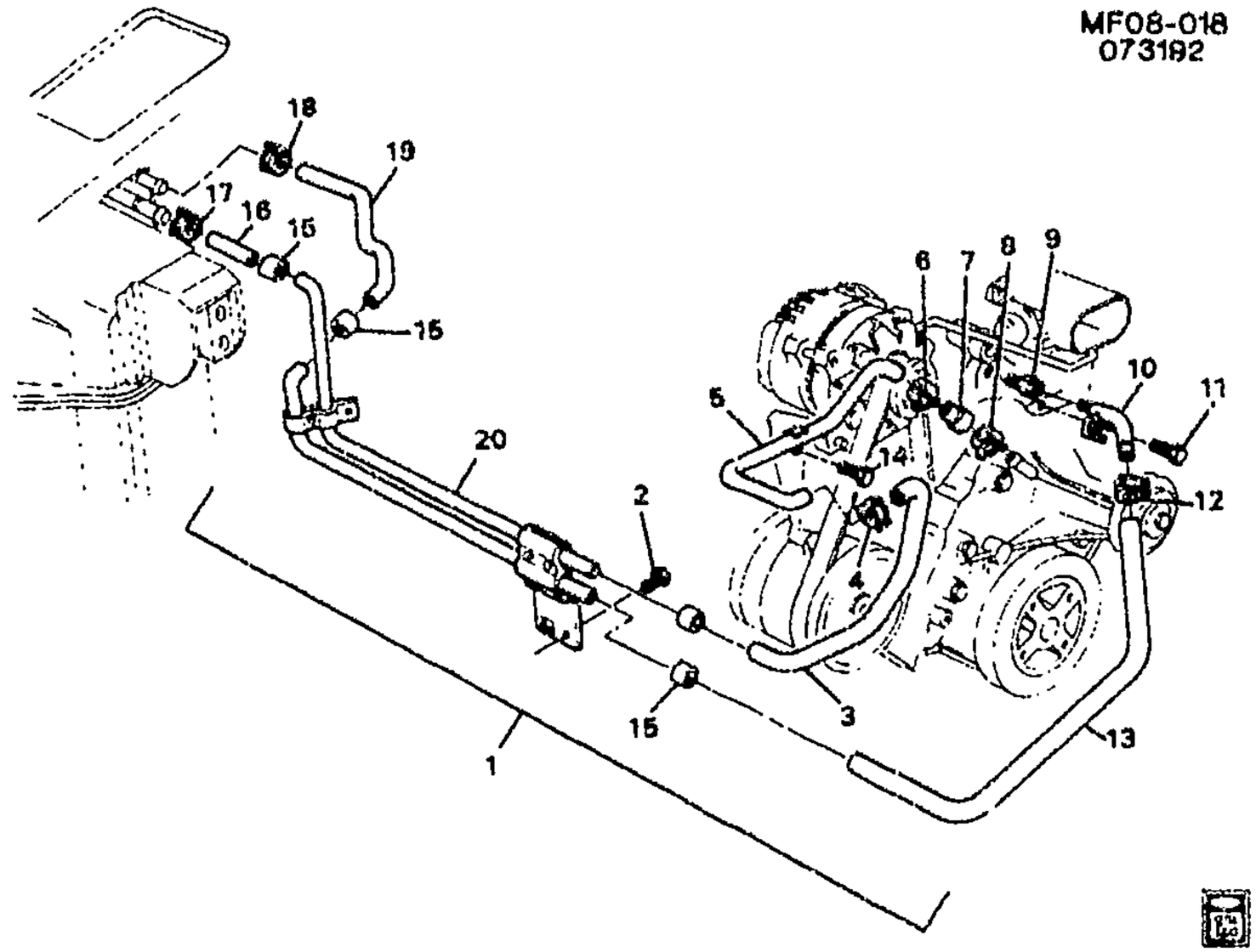

MF08-018

1993-1995 F HOSES & PIPES/HEATER (L32/3.4S)

1.	8-C18	8.846	HOSE, HTR INL & OTLT (INCLS 3, 13, 15, 16, 19, 20)	93-95	F (L32)	1	10140811
2.		8.900	BOLT, HFH M8X1.25X18 (HTR INL & OTLT PIPE)	93-95		1	11513703
3.	8-C18	8.846	HOSE, HTR OTLT FRT (PART OF 1)	93-95	F (L32)	1	10146941
4.	8-C18	8.846	CLAMP, HTR OTLT FRT HOSE (8.948)	93-95	F	1	25665982
5.	8-C18	8.846	PIPE, HTR OTLT (INCLS 6-8)	93-95	F (L32)	1	10151665
6.		8.948	CLAMP, WORM GEAR, 11/16" TO 1 5/16" (HTR OTLT FRT HOSE (PART OF 5)) (AC-DELCO #12337891)	93-95		1	12337891
7.		N.S.	HOSE, HTR OTLT FRT (PART OF 5)				
8.		8.948	CLAMP, SPR (25-29MM) (HTR OTLT HOSE) (PART OF 5)	93-95		1	10108255
9.	8-C21	8.866	NIPPLE, HTR WAT ENG INL	93-95	F (L32)	1	88891732
10.	8-C18	8.846	PIPE, HTR INL	93-95	F (L32)	1	10188204
11.		8.900	BOLT, HFH-M8X1.25X20 (HTR INL PIPE)	93-95	F	1	11516186
12.	8-C18	8.846	CLAMP, HTR INL FRT HOSE (BLACK) (8.948)	93-95	F	1	10108255
13.	8-C18	8.846	HOSE, HTR INL FRT (PART OF 1)	93-95	F (L32)	1	10146939
14.		8.900	BOLT, M6X1X16, 13.5 THD, 14.2 OD, 9.8, SN-ZN (HTR OTLT	93-95		2	11517517

cardiagn.com

15.		N.S.	**COUPLING**, HTR INL & OTLT HOSE (CRIMP FIT) (PART OF 1) .		.....		
16.		N.S.	**HOSE**, HTR OTLT RR (PART OF 1)		.....		
17.	8-C18	8.846	**CLAMP**, HTR OTLT RR HOSE (8.948)	93-95	F	1	25665982
18.	8-C18	8.846	**CLAMP**, HTR INL RR HOSE (BLACK) (8.948)	93-95	F	1	10108255
19.	8-C18	8.846	**HOSE**, HTR INL RR (PART OF 1) .	93-95	F	1	10146992
20.		N.S.	**PIPE**, HTR INL & OTLT (PART OF 1)		.....		

RPO DEFINITIONS
L32 - ENGINE,3.4L,V6,(3.4S),SFI,OHV

cardiagn.com

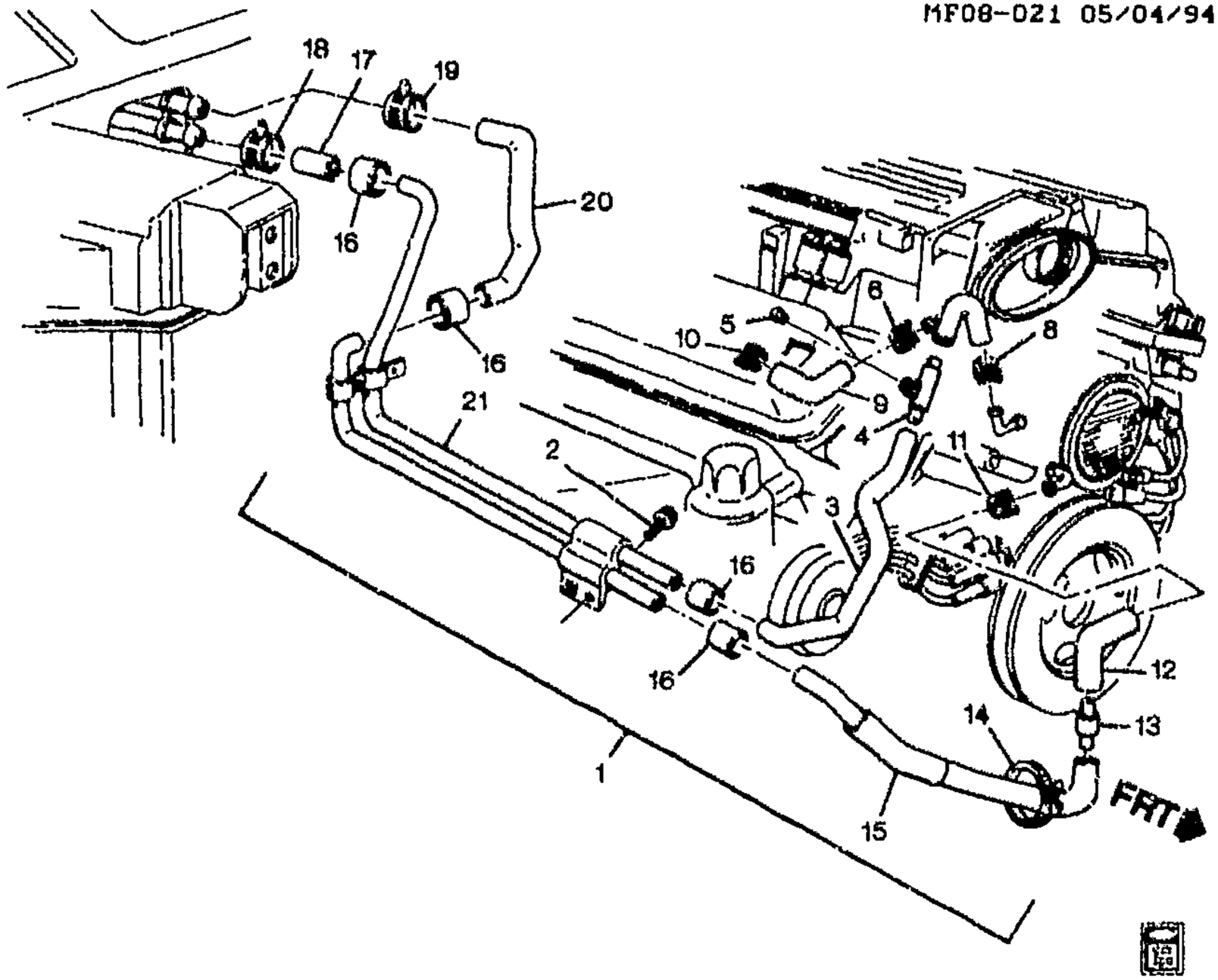

MF08-021

1995-1997 F HOSES & PIPES/HEATER (LT1/5.7P)

1.	8-C18	8.846	**HOSE**, HTR INL & OTLT (INCLS 3-5, 7, 12-17, 20, 21)	95-97	F (LT1)	1	10261147
2.		8.900	**BOLT**, HFH M8X1.25X18 (HTR INL & OTLT PIPE)	95-97	F	1	11513703
3.	8-C18	8.846	**HOSE**, HTR OTLT FRT (TO BLEEDER VLV) (PART OF 1)	95-97	F (LT1)	1	10170163
4.	8-C18	8.846	**CONNECTOR**, HTR OTLT HOSE (PART OF 1)	95-97	F (LT1)	1	10262478
5.	8-C18	8.846	**VALVE**, HTR AIR BL (PART OF 1) (1.035)	95-97	F (LT1)	1	10070107
6.		8.948	**CLAMP**, WORM GEAR, 1/2-13/16 (THROT BODY HTR HOSE)	95-97	F	1	22527587
7.	8-C18	8.846	**HOSE**, HTR OTLT FRT (PART OF 1)	95-97	F (LT1)	1	10215999
8.		8.948	**CLAMP**, 12 WIDE, 23 NOM DIA, 1.4 THK, SAE 1075 STL, BLACK (HTR OTLT FRT HOSE)	95-97	F	1	25665982
9.	8-N6	3.337	**HOSE**, THROT BODY HTR INL	95-97	F (LT1)	1	12553625
10.		8.948	**CLAMP**, WORM GEAR, 1/2-13/16 (THROT BODY HTR HOSE)	95-97	F	1	22527587
11.	8-C18	8.846	**CLAMP**, HTR INL FRT HOSE (BLACK) (8.948)	95-97	F	1	10108255

cardiagn.com

12.	8–C18	8.846	**HOSE**, HTR INL FRT (PART OF 1)	95–97	F (LT1)	1	10188037
13.	8–C21	8.866	**VALVE**, HTR WAT FLOW CONT (PART OF 1) (AC–DELCO #15–5511)	95–97	F (LT1)	1	10188036
	8–E18	9.795	**VALVE**, HTR WAT FLOW CONT (PART OF 1) (8.866) (AC–DELCO #15–5511)	95–97	F (LT1)	1	10188036
14.	8–C18	8.846	**STRAP**, HTR INL HOSE (PART OF 1)	95–97	F (LT1)	1	10209522
15.	8–C18	8.846	**HOSE**, HTR INL FRT (PART OF 1)	95–97	F (LT1)	1	10146991
16.		N.S.	**COUPLING**, HTR INL & OTLT HOSE (CRIMP FIT) (PART OF 1) .		.....		
17.		N.S.	**HOSE**, HTR OTLT RR (PART OF 1)		.....		
18.	8–C18	8.846	**CLAMP**, HTR OTLT RR HOSE (8.948)	95–97	F	1	25665982
19.	8–C18	8.846	**CLAMP**, HTR INL RR HOSE (BLACK) (8.948)	95–97	F	1	10108255
20.	8–C18	8.846	**HOSE**, HTR INL RR (PART OF 1) .	95	F	1	10146992
	8–C18	8.846	**HOSE**, HTR INL RR (PART OF 1) .	96–97	F (LT1)	1	10146992
	8–C18	8.846	**SLEEVE**, HTR HOSE (PART OF 1)	95–97	F (LT1)	1	10264393
21.		N.S.	**PIPE**, HTR INL & OTLT (PART OF 1)		.....		

RPO DEFINITIONS
LT1 – ENGINE–GAS, 8 CYL, 5.7L(5.7P),MFI,HO

cardiagn.com

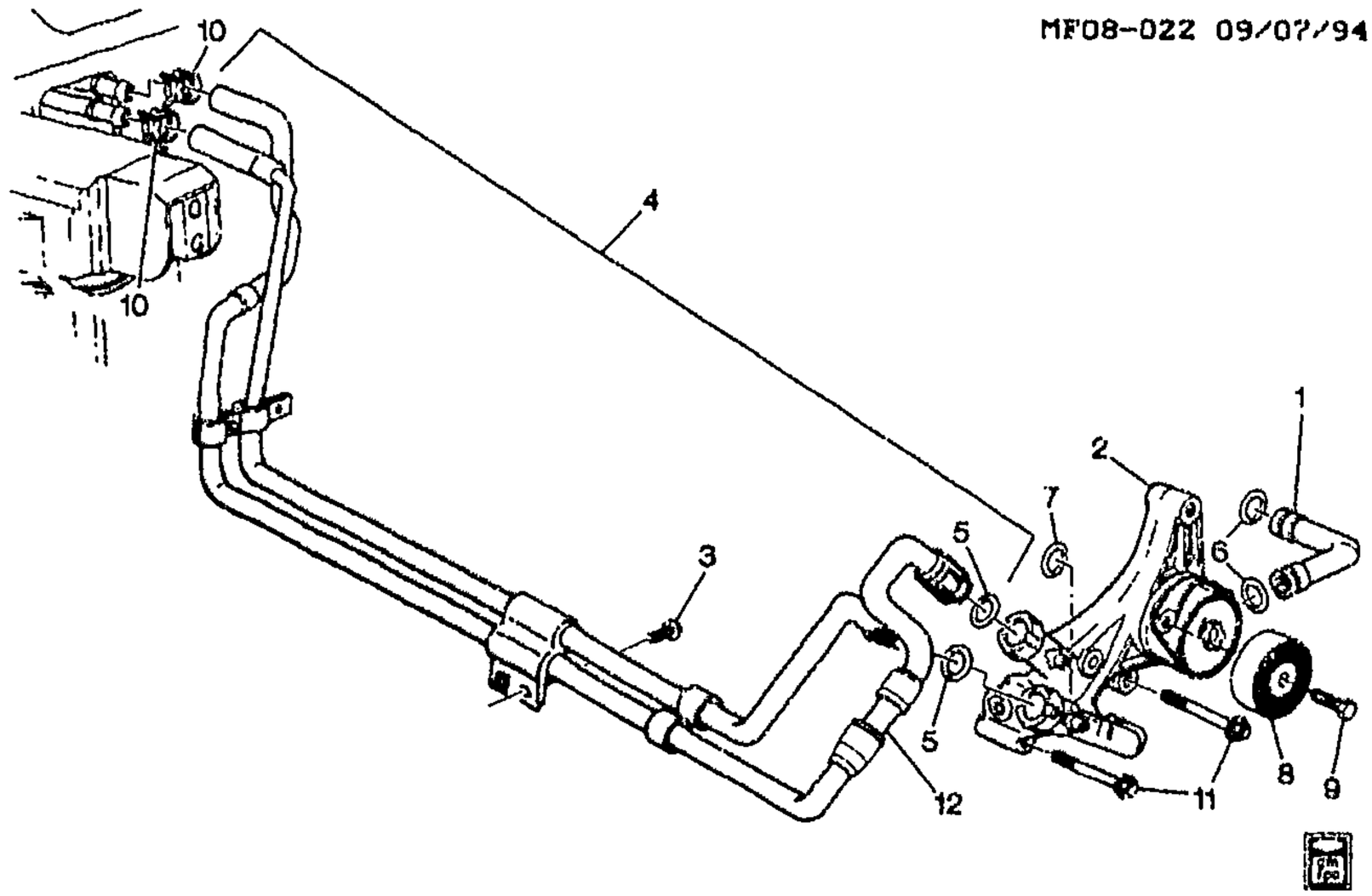

MF08-022

1995-1997 F HOSES & PIPES/HEATER (L36/3.8K)

1.	8-C18	8.846	**PIPE**, HTR WAT BYPASS INL	95-97	F (L36)	1	24503423
2.	8-M13	1.060	**TENSIONER**, DRV BELT (INCLS 7-9)	95-97	F (L36)	1	24504818
3.	8-C18	8.846	**BOLT**, HTR INL & OTLT PIPE (M8X1.25X15 POR) (3.023)	95-97	F	1	14060161
4.	8-C18	8.846	**HOSE**, HTR INL & OTLT (INCLS 5, 12)	95-97	F (L36)	1	10415018
5.	8-C18	8.846	**SEAL**, HTR OTLT PIPE (O RING) (PART OF 4)	95-97	F (L36)	1	10263197
	8-C18	8.846	**SEAL**, HTR INL PIPE (O RING) ...	95-97	F (L36)	1	10263197
6.	8-C18	8.846	**SEAL**, HTR WAT BYPASS INL PIPE (O RING) (0.674" ID) (9.260)	96-97	F (L36)	2	25537068
	8-C18	8.846	**SEAL**, HTR WAT BYPASS INL PIPE (O RING) (ORANGE W/BLK COATING) (0.674" ID) (9.260) (FOR 2ND DES SEE 24505540) (TO LWR INT MANIF)	95	F (L36, M30) (1ST DES)	1	25537068
	8-C18	8.846	**SEAL**, HTR WAT BYPASS INL PIPE (O RING) (TO LWR INT MANIF) (PURPLE) (PURPLE) (FOR 1ST DES SEE 25537068) ..	95	F (L36) (2ND DES)	1	24505540
7.	8-M13	1.060	**SEAL**, DRV BELT TENSR (PART OF 2) (O-RING SEAL-0.799" ID, 0.1.03 X-SECT DIA, BLACK)	95-97	F (L36)	1	24502846
8.	8-M13	1.062	**PULLEY**, BELT IDLER (PART OF 2) (PART OF ACCESSORY TENSIONER ASSEMBLY) (9.180) (AC-DELCO #15-4683)	95-97	F (L36)	1	24506756

cardiagn.com

9.	8–M13	1.060	**BOLT**, BELT IDLER PUL (PART OF 2) (HFH, 10X1.5X27.9, 25) (LH SWAGEFORM THD, 34.5 OD, W/HTR INL/OUTL PORTS)	95–97	F (L36)	1	12537035
10.		8.948	**CLAMP**, SPR (25–29MM) (HTR INL RR HOSE)	95–97	F	1	10108255
11.	8–M13	1.060	**BOLT**, DRV BELT TENSR (M10X1.5X60, 13MM OD, HEX HD, 10.9, GM500 STEEL) (HFH, M10X1.50X60, 26 THD, 22.3 OD, 10.9, 7114M, MACH, HDR–PT) (8.900)	95–97	F (L36)	2	11515772
12.		N.S.	**VALVE**, HTR WAT FLOW CONT (NOT SERVICED IN THIS ASSEMBLY DUE TO CRIMPED FITTINGS) (PART OF 4)		.....		

RPO DEFINITIONS
L36 – ENGINE GAS, 6 CYL, 3.8K, MFI, V6, HO (ERV6 SERIES)
M30 – TRANSMISSION,AUTOMATIC 4 SPEED,4L60E,ELECTRONIC

cardiagn.com

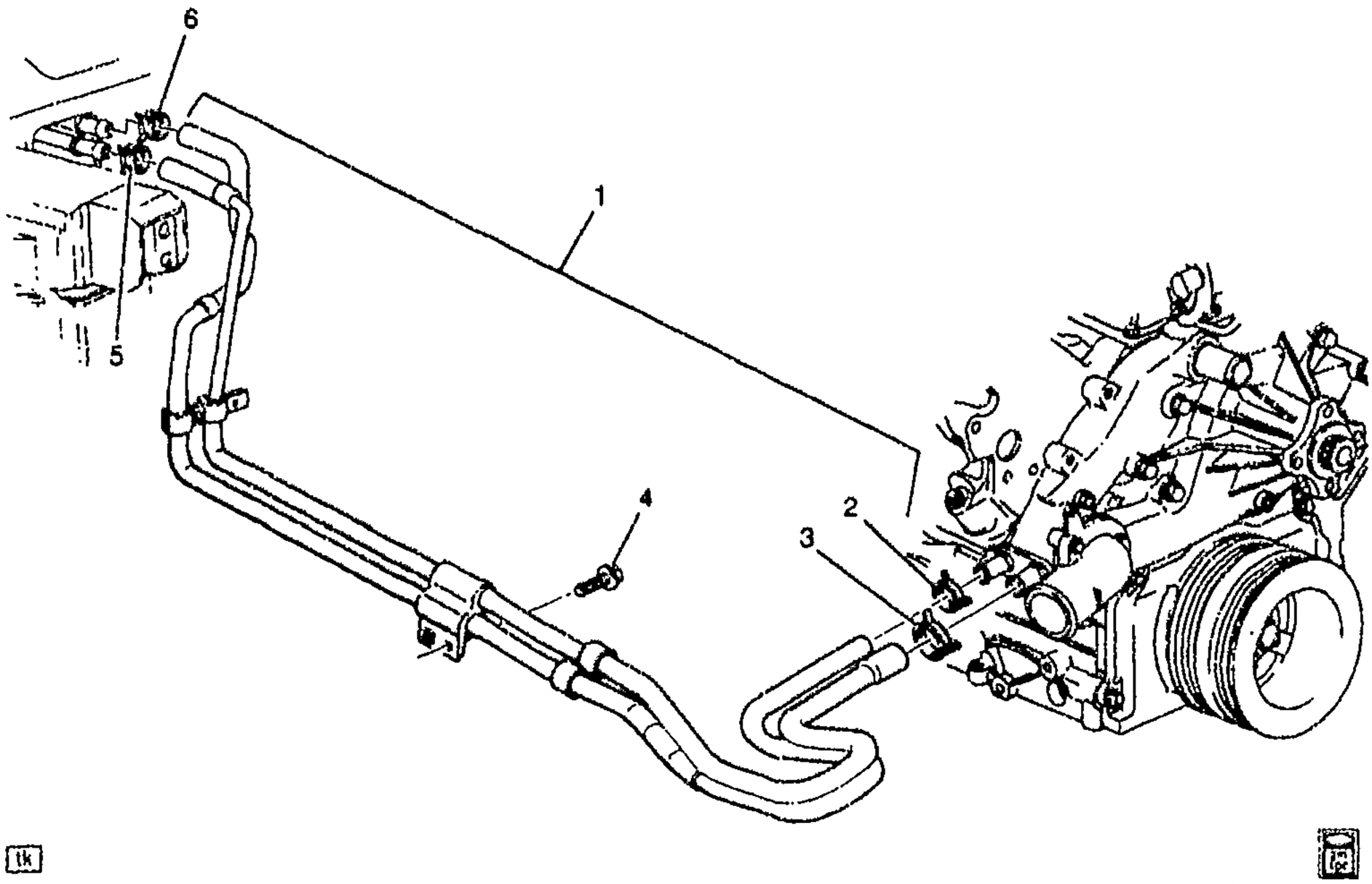

MF08-023

1998-2002 F HOSES & PIPES/HEATER (LS1/5.7G)

1.	8-C18	8.846	HOSE, HTR INL & OTLT (INCLS 2, 3)	98-02	F (LS1)	1	10415020
2.		8.948	CLAMP, 12 WIDE, 23 NOM DIA, 1.4 THK, SAE 1075 STL, BLACK (PART OF 1)	98-02	F	1	25665982
3.		8.948	CLAMP, SPR (25-29MM) (PART OF 1)	98-02	F	1	10108255
4.	8-C18	8.846	BOLT, HTR INL & OTLT PIPE (M8X1.25X15 POR) (3.023)	98-02	F	1	14060161
5.		8.948	CLAMP, 12 WIDE, 23 NOM DIA, 1.4 THK, SAE 1075 STL, BLACK (HTR OTLT RR HOSE)	98-02	F	1	25665982
6.		8.948	CLAMP, SPR (25-29MM) (HTR INL RR HOSE)	98-02	F	1	10108255

RPO DEFINITIONS
LS1 - ENGINE GAS, 8 CYL, 5.7L, SFI, ALUMINUM ENGINE

cardiagn.com

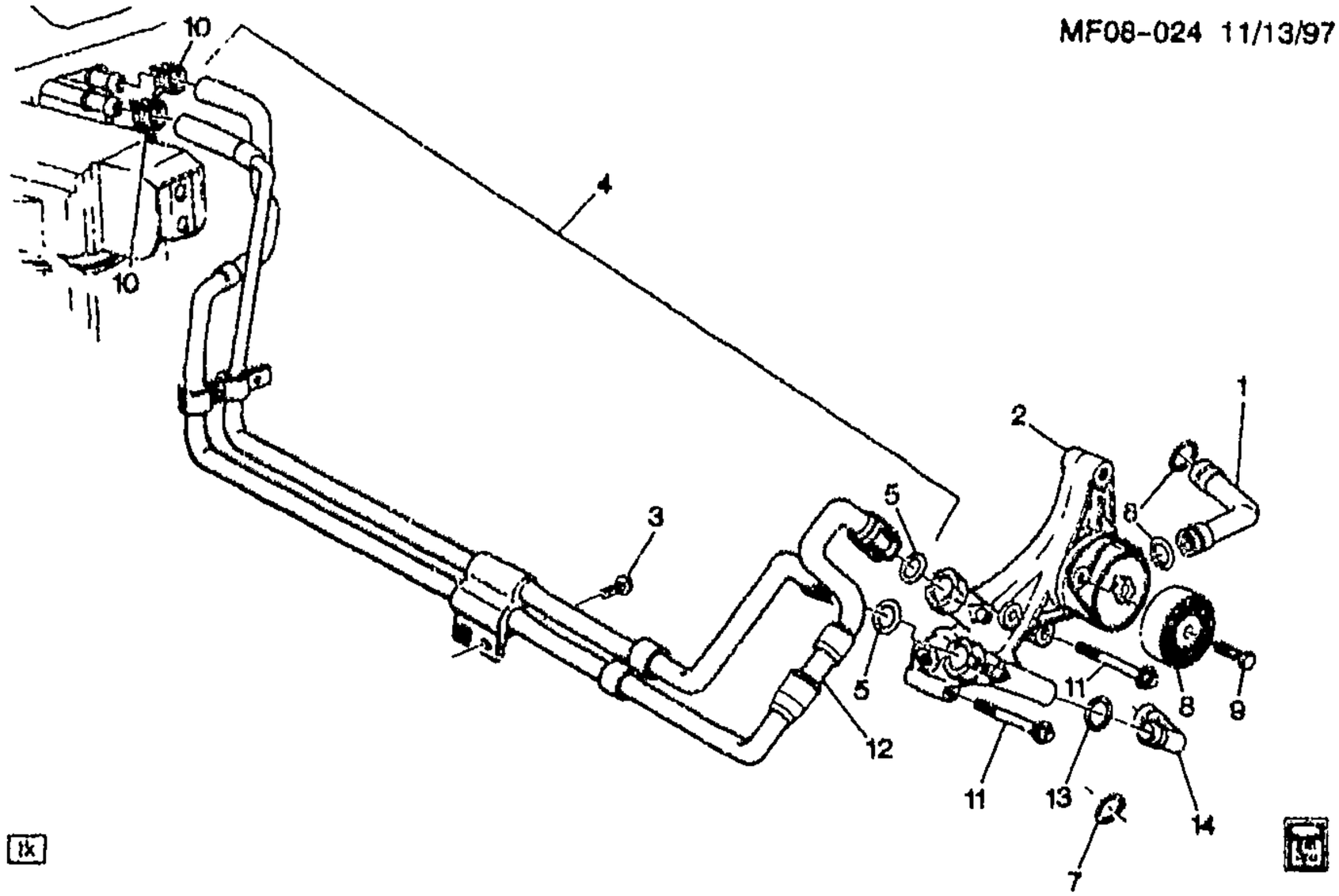

MF08-024

1998-2002 F HOSES & PIPES/HEATER (L36/3.8K)

1.	8-C18	8.846	PIPE, HTR WAT BYPASS INL	98	F (L36)	1	24503423
	8-M14	1.097	PIPE, THERM BYPASS UPR (8.846)	99-02	F (L36)	1	24503423
2.	8-M13	1.060	TENSIONER, DRV BELT (INCLS 2)	98	F (L36)	1	24506699
	8-M13	1.060	TENSIONER, DRV BELT (INCLS 2)	99-02	F (L36)	1	24508594
3.	8-C18	8.846	BOLT, HTR INL & OTLT PIPE (M8X1.25X15 POR) (3.023)	98-02	F	1	14060161
4.	8-C18	8.846	HOSE, HTR INL & OTLT (INCLS 5, 12)	98-02	F (L36)	1	10415018
5.	8-C18	8.846	SEAL, HTR OTLT PIPE (O RING) (PART OF 4)	98-02	F		10263197
	8-C18	8.846	SEAL, HTR INL PIPE (O RING) ...	98-02	F		10263197
6.	8-C18	8.846	SEAL, HTR WAT BYPASS INL PIPE (O RING) (0.674" ID) (9.260)	98-02	F (L36)	2	25537068
7.	8-M14	1.097	SEAL, THERM BYPASS PIPE (O RING) (PART OF 14) (O-RING SEAL-0.799" ID, 0.1.03 X-SECT DIA, BLACK) (1.060)	98-02	F	1	24502846
8.	8-M13	1.062	PULLEY, BELT IDLER (PART OF 2) (PART OF ACCESSORY TENSIONER ASSEMBLY) (9.180) (AC-DELCO #15-4683)	98-02	F (L36)	1	24506756
9.	8-M13	1.060	BOLT, BELT IDLER PUL (PART OF 2) (HFH, 10X1.5X27.9, 25) (LH SWAGEFORM THD, 34.5 OD, W/HTR INL/OUTL PORTS)	98-02	F (L36)	1	12537035

cardiagn.com

10.		8.948	**CLAMP** SPR (25–29MM) (HTR INL RR HOSE)	96–02	F	1	10108255
11.	8–M13	1.060	**BOLT**, DRV BELT TENSR (BOLT, HFH, M10X1.5X75, 25 THD, 22.3 OD, 10 P–POINT, 9.8, PZOR) (HFH M10X1.5X65) (8.900)	99–02	F (L36)	2	11516109
	8–M13	1.060	**BOLT**, DRV BELT TENSR (M10X1.5X60, 13MM OD, HEX HD, 10.9, GM500 STEEL) (HFH, M10X1.50X60, 26 THD, 22.3 OD, 10.9, 7114M, MACH, HDR–PT) (8.900)	98	F (L36)	2	11515772
12.		N.S.	**VALVE**, HTR WAT FLOW CONT (NOT SERVICED IN THIS ASSEMBLY DUE TO CRIMPED FITTINGS) (PART OF 4)		.....		
13.	8–M14	1.097	**SEAL**, THERM BYPASS PIPE (O RING) (PART OF 14) (0.674" ID) (9.260)	98–02	F	1	25537068
14.	8–M14	1.097	**PIPE**, THERM BYPASS LWR (INCLS 7, 13)	98–02	F (L36)	1	12565082

RPO DEFINITIONS
L36 – ENGINE GAS, 6 CYL, 3.8K, MFI, V6, HO (ERV6 SERIES)

cardiagn.com

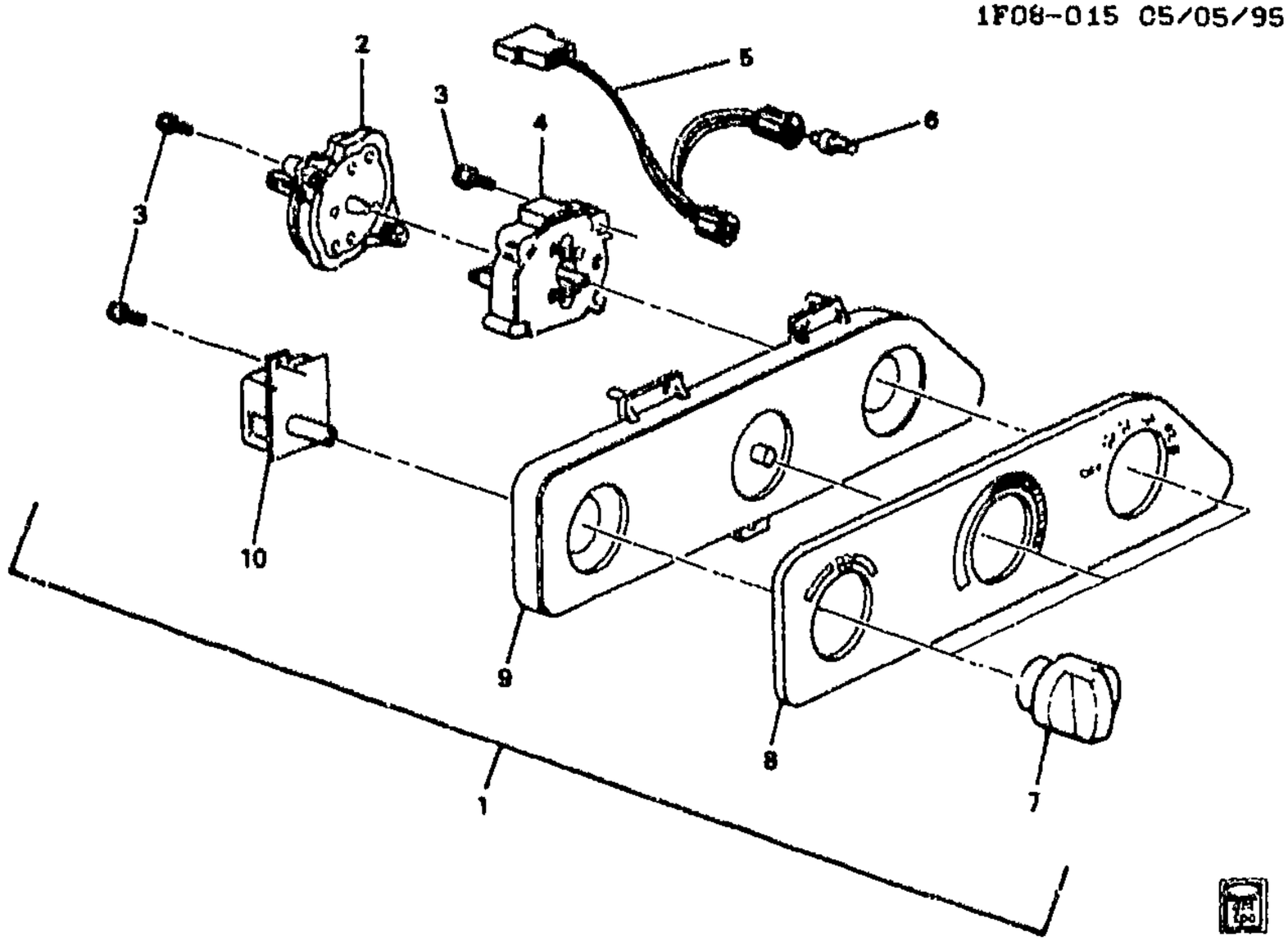

1F08-015

1993-1996 F HEATER CONTROL ASM (C41)

1.	8-C19	8.849	CONTROL, HTR (AC-DELCO #15-72269)	93	F (C41)	1	16190421
	8-C19	8.849	CONTROL, HTR (AC-DELCO #15-72058)	94-96	F (C41)	1	16183801
2.	8-D23	9.280	VALVE, HTR & A/C CONT VAC (STAMPED 6648) (3.885) (AC-DELCO #14056648)	93-96	F	1	14056648
3.		N.S.	BOLT, HTR CONT				
4.	8-D20	9.275	SWITCH, HTR & A/C CONT SEL (8.850) (AC-DELCO #15-5478)	93-96	F (C41)	1	16147769
5.	8-C20	8.852	HARNESS, HTR CONT WRG (9.278)	93-96	F (C41)	1	16159546
6.	8-D23	9.279	BULB, HTR & A/C CONT LP (AC-DELCO #7895189)	93-96	F	2	7895189
7.	8-C20	8.852	KNOB, HTR CONT BLO SW	93	F	3	16159554
	8-C20	8.852	KNOB, HTR CONT BLO SW (9.278)	94-96	F (C41)	1	16183912
	8-C20	8.852	KNOB, HTR CONT MODE	93	F	3	16159554
	8-C20	8.852	KNOB, HTR CONT MODE (9.278)	94-96	F (C41)	1	16183912
	8-C20	8.852	KNOB, HTR CONT TEMP	93	F	3	16159554
	8-C20	8.852	KNOB, HTR CONT TEMP (9.278)	94-96	F (C41)	1	16183912
	8-C20	8.852	KNOB, HTR CONT TEMP	96	F (C41)	1	16169115
8.		DISCON	DIAL, HTR CONT (8.849)	93	F (C41)	1	16191016
	8-C20	8.852	DIAL, HTR CONT (8.849)	94-96	F (C41)	1	16183767
9.		N.S.	PLATE, HTR CONT DIAL BKG				
10.	8-C20	8.852	SWITCH, HTR CONT BLO (AC-DELCO #15-71960)	93-96	F (C41)	1	16159876

cardiagn.com

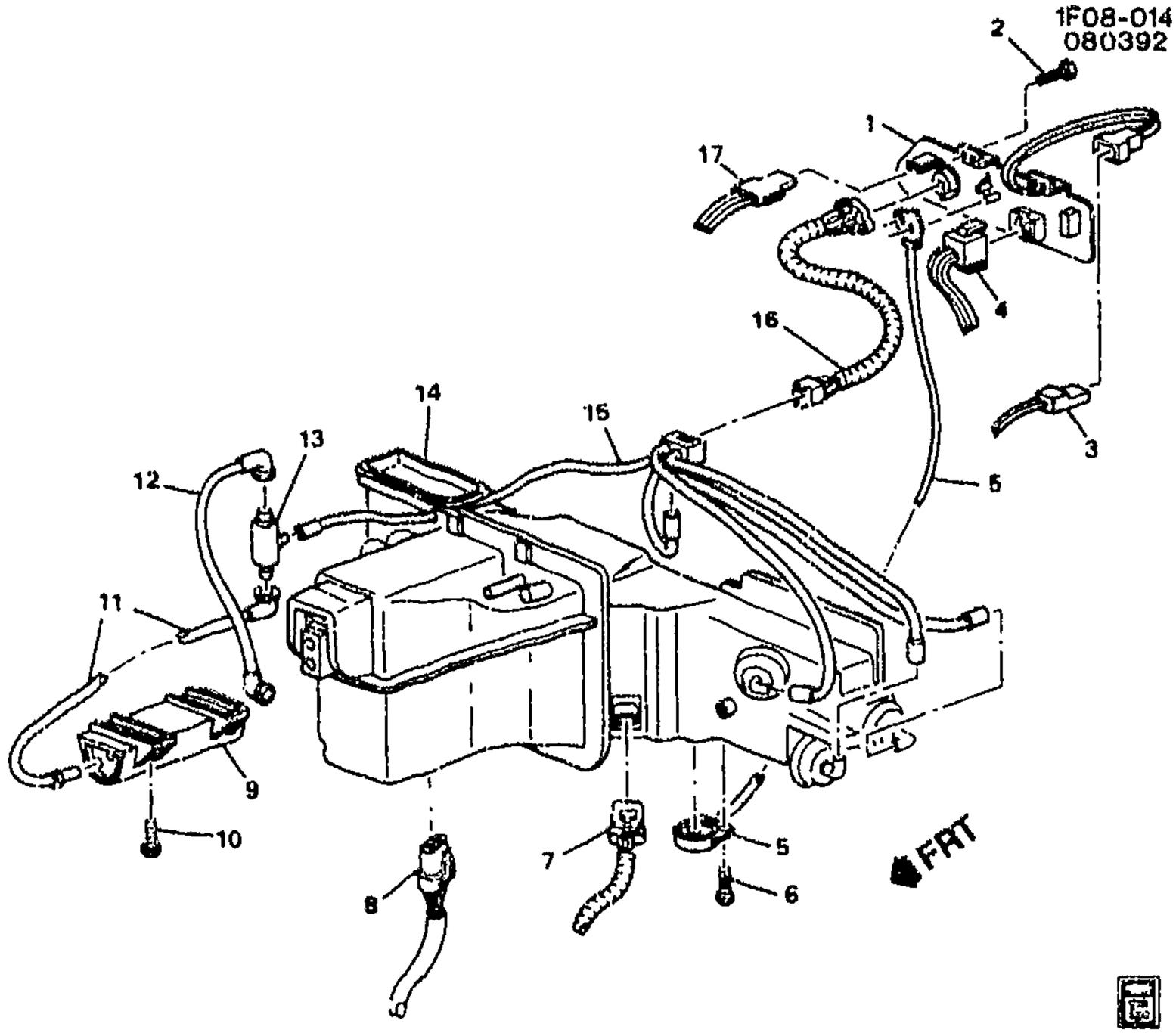

1F08--014

1993–1996 F HEATER CONTROL SYSTEM (C41)

1.	8–C19	8.849	**CONTROL**, HTR (AC–DELCO #15–72269)	93	F (C41)	1	16190421
	8–C19	8.849	**CONTROL**, HTR (AC–DELCO #15–72058)	94–96	F (C41)	1	16183801
2.		8.900	**BOLT/SCREW**, HWH W/FL WA M4.2X1.41X20, 6010M, 7253M, 12.5 OD, DOG PT (HTR & A/C CONT) (8.977)	93–96		3	11509709
3.	8–D19	9.273	**CONNECTOR**, CONT–HTR & A/C (ILLUM LP) (2–WAY F W/LEADS, W/INDEX TAB OTR EDGE OF CAVITY B) (2.535) (AC–DELCO #PT146)	93–96	F	1	12085535
4.	8–C20	8.852	**CONNECTOR**, SW–BLO MOT (5–WAY F) (W/LEADS) (9.275) (AC–DELCO #PT344)	93–96	F	1	12102677
	8–C20	8.852	**CONNECTOR**, SW–BLO MOT (GRAY) (6–WAY F W/LEADS) (4.563)	93	F	1	12125665
5.	8–E18	9.787	**CABLE**, TEMP CONT	93–96	F	1	10281598

cardiagn.com

			M4.2X1.41X20, 6010M, 7253M, 12.5 OD, DOG PT (TEMP CONT CBL) (8.977)				
7.	8-D15	9.215	**CONNECTOR**, RES-BLO MOT (6-WAY F W/LEADS) (13.090) (AC-DELCO #PT1032)	93-96	F	1	15305888
8.	8-C20	8.852	**CONNECTOR**, BLO CONT HARN (2-WAY F) (9.215) (AC-DELCO #PT275)	93-96	F	1	12102484
9.	8-D23	9.281	**TANK**, HTR & A/C CONT VAC	93-96	F	1	10168042
10.		8.977	**BOLT**, SCR HEX W/FLAT WA 12 DIA TYPE AB (HTR & A/C CONT VAC TK)	93-96		2	11509374
11.		N.S.	**HARNESS**, HTR & A/C CONT VAC (TO TANK)				
12.		N.S.	**TUBE**, HTR & A/C CONT VAC SCE				
13.	8-D23	9.280	**VALVE**, HTR & A/C CONT VAC (STAMPED 6648) (3.885) (AC-DELCO #14056648)	93-96	F	1	14056648
14.		N.S.	**MODULE**, HTR & BLO (SEE GROUP 8.000 "HEATER ASM" FOR DETAIL ILLUSTRATED VIEW.)				
15.	8-D23	9.281	**HARNESS**, AIR VLV ACTR VAC	93-96	F (C41)	1	52458911
16.	8-D23	9.281	**HARNESS**, HTR & A/C CONT VAC	93-96	F	1	10138731
17.	8-D20	9.275	**CONNECTOR**, SW-HTR & A/C CONT SEL (3-WAY F) (W/LEADS) (10.150) (AC-DELCO #PT442)	93-96	F	1	12117269

RPO DEFINITIONS
C41 – HEATER,OUTSIDE AIR,WITH FAN AND DEFROSTER

cardiagn.com

ILLUSTRATION INDEX

	TITLE	GRID
1993–1995	F A/C & HEATER MODULE ASM (LT1,L32,C60)	8–I4
1995–1997	F A/C & HEATER MODULE ASM (L36,C60)	8–I8
1996–1997	F A/C & HEATER MODULE ASM (LT1,C60)	8–I8
1998–2002	F A/C & HEATER MODULE ASM (C60)	8–I11
1993–1994	F A/C COMPRESSOR ASM/HD6	8–I14
1995	F A/C COMPRESSOR ASM/HD6 (L32/3.4S)	8–I16
1995–1996	F A/C COMPRESSOR ASM/HD6 (LT1/5.7P)	8–I16
1995–2002	F A/C COMPRESSOR ASM/V5 (L36/3.8K)	8–I18
1997	F A/C COMPRESSOR ASM/HD6(LT1/5.7P)	8–I21
1998–2002	F A/C COMPRESSOR ASM/V7(LS1/5.7G)	8–I23
1993–1995	F A/C COMPRESSOR MOUNTING (L32/3.4S)	8–I25
1993–1997	F A/C COMPRESSOR MOUNTING (LT1/5.7P)	8–I27
1995–1998	F A/C COMPRESSOR MOUNTING (L36/3.8K)(C60)	8–J2
1998–2002	F A/C COMPRESSOR MOUNTING (LS1/5.7G)	8–J4
1999–2002	F A/C COMPRESSOR MOUNTING (L36/3.8K)(C60)	8–J6
1993–1994	F A/C REFRIGERATION SYSTEM (C60)	8–J8
1995	F A/C REFRIGERATION SYSTEM (L32 & LT1/3.4S & 5.7P)(C60)	8–J8
1996–1997	F A/C REFRIGERATION SYSTEM (LT1/ 5.7P)(C60)	8–J8
1995–1997	F A/C REFRIGERATION SYSTEM (L36/3.8K)(C60)	8–J13
1998–2002	F A/C REFRIGERATION SYSTEM (LS1/ 5.7G)(C60)	8–J16
1998–2002	F A/C REFRIGERATION SYSTEM (L36/3.8K)(C60)	8–J20
1993–1996	F A/C AIR DISTRIBUTION SYSTEM	8–J23
1997–2002	F A/C AIR DISTRIBUTION SYSTEM	8–J26
1993–1996	F A/C & HEATER CONTROL ASM (C60)	8–K2
1997–2002	F A/C & HEATER CONTROL ASM (C60)	8–K4
1993–2002	F A/C CONTROL SYSTEM (C60)	8–K7
1993–1996	F ANTENNA ASM/FIXED(U73)	8–K10
1997	F ANTENNA ASM/FIXED(U73)(1ST DES)	8–K10
1993–2002	F ANTENNA ASM/POWER(U75)	8–K13
1997	F ANTENNA ASM/FIXED(U73)(2ND DES)	8–K16
1998–2002	F ANTENNA ASM/FIXED(U73)	8–K16
1993–1994	F87 AUDIO SYSTEM	8–K18
1994–2002	F67 AUDIO SYSTEM	8–K21
1995–1996	F87 AUDIO SYSTEM	8–K23
1997–2002	F87 AUDIO SYSTEM	8–K26
1993–1996	F RADIO ASM & MOUNTING	8–L2
1997–2002	F RADIO ASM & MOUNTING	8–L5
1993	F CLUSTER ASM/INSTRUMENT PANEL (U18,U19)	8–L11
1993–1995	F CLUSTER ASM/INSTRUMENT PANEL (ELECTROMECHANICAL)	8–L12

cardiagn.com

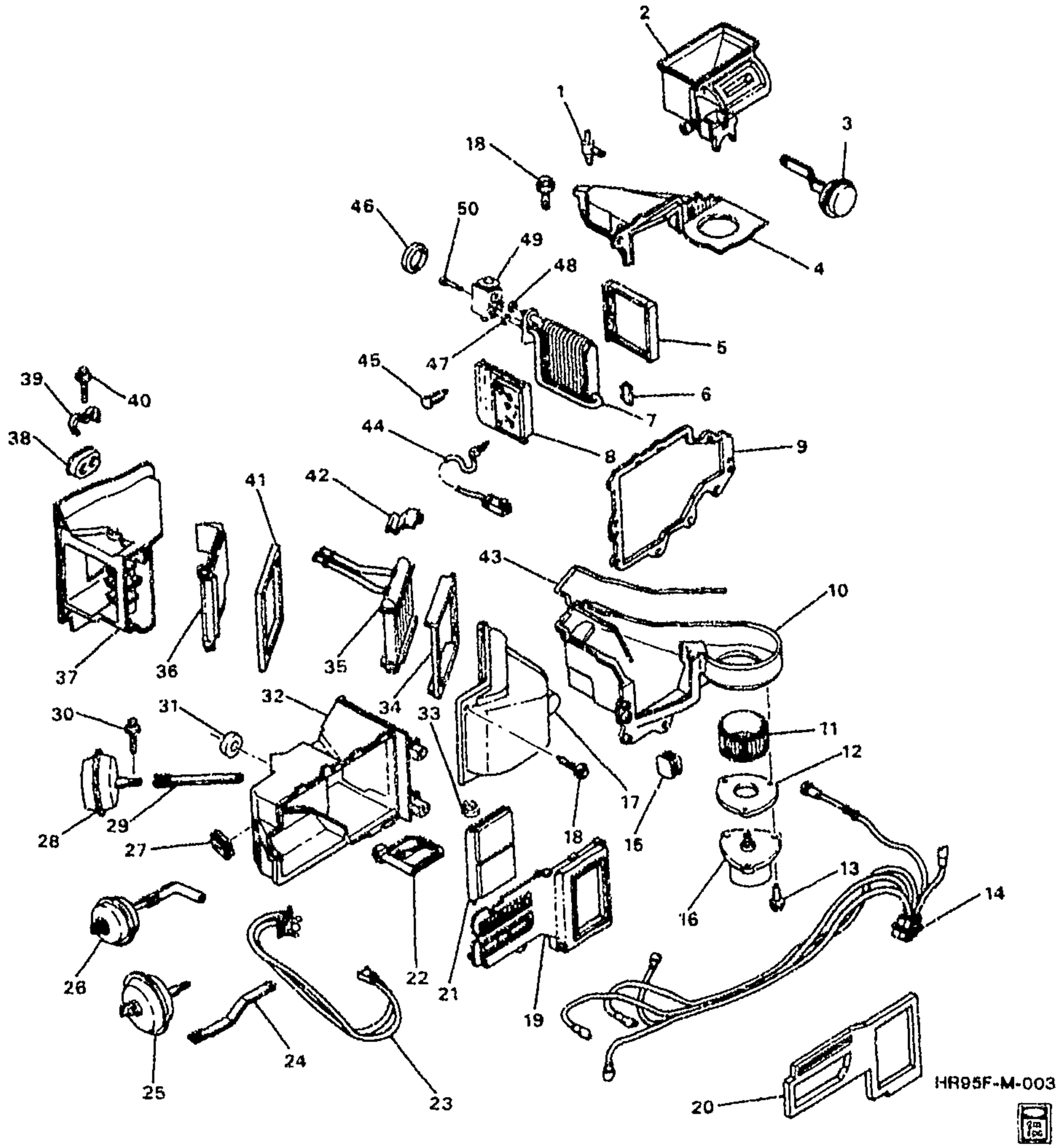

GM09-208

1993-1995 F A/C & HEATER MODULE ASM (LT1,L32,C60)

1.	8-D23	9.280	VALVE, HTR & A/C CONT VAC (STAMPED 6648) (3.885) (AC-DELCO #14056648)	93-95	F	1	14056648
	8-D23	9.280	VALVE, HTR & A/C CONT VAC (AC-DELCO #15-71967)	93-95	F (C60)	1	15159553
2.	8-D14	9.211	HOUSING, AIR INL (AIR INL &	93-95	F (C60)	1	52461468

cardiagn.com

3.	8-D23	9.280	**ACTUATOR**, I/S AIR VLV (AC-DELCO #15-71977)	93-95	F (C60)	1	1996800
4.	8-D14	9.211	**CASE**, AUX A/C EVPR & BLO UPR	93-95	F	1	52458965
5.	8-D14	9.211	**SEAL**, A/C EVPR	93-95	F (C60)	1	52458973
6.	8-D14	9.211	**BRACKET**, A/C EVPR	93-95	F (C60)	1	52458968
7.	8-D14	9.210	**EVAPORATOR**, A/C (W/CASE) (AC-DELCO #15-6752)	93-94	F (C60)	1	52467019
	8-D14	9.210	**EVAPORATOR**, A/C (W/CASE) (AC-DELCO #15-6752)	95	F (LT1, C60)	1	52467019
	8-D14	9.210	**EVAPORATOR**, A/C (W/CASE) (AC-DELCO #15-6752)	95	F (L32, C60)	1	52467019
8.	8-D14	9.210	**FILTER**, A/C EVPR AIR	93-95	F (C60)	1	52458971
9.	8-D14	9.211	**SEAL**, A/C EVPR & BLO MDL	93-95	F	1	52481317
10.	8-D14	9.211	**CASE**, AUX A/C EVPR & BLO LWR	93-95	F	1	52458976
11.	8-D15	9.216	**IMPELLER**, HTR & A/C BLO (PART OF 16) (8.857) (AC-DELCO #15-8761)	93	F	1	52472650
	8-D15	9.216	**IMPELLER**, HTR & A/C BLO (PART OF 16) (8.857) (AC-DELCO #15-8761)	94-95	F (C60)	1	52472650
12.	8-C21	8.856	**INSULATOR**, BLO MOT (9.216)	93-95	F	1	3091179
13.		N.S.	**BOLT**, HTR & BLO MDL				
14.	8-D23	9.281	**HARNESS**, AIR VLV ACTR VAC	93-95	F (C60)	1	52458911
15.	8-D20	9.275	**SEAL**, A/C REFRIG TEMP SEN (9.211)	93-95	F	1	52461203
16.	8-C21	8.855	**MOTOR**, BLO (W/IMPLR) (INCL 11) (AC-DELCO #15-8760)	93-95	F (C60)	1	52481553
	8-D15	9.215	**MOTOR**, BLO (W/IMPLR) (INCL 11) (8.855) (AC-DELCO #15-8760)	93-95	F (C60)	1	52481553
17.	8-C20	8.854	**CASE**, HTR RR (9.211)	93-95	F	1	52458960
18.		8.977	**BOLT-HFH**, M4.2X1.4X13, 11.6THD, 8.5OD, GM6010-M, POR, TAP (HTR & BLO MDL) (AC-DELCO #11508256)	93-95		AR	11508256
19.	3-C20	8.854	**CASE**, HTR (RR) (CVR)	93-95	F (C60)	1	52458712
20.	8-E17	9.786	**SEAL**, AIR DISTR CASE	93-95	F (C60)	1	52464968
21.	8-E17	9.786	**VALVE**, MODE (W/SH) (UPR) (BI-LVL) (W/LINK)	95	F (LT1, C60)	1	52472426
	8-E17	9.786	**VALVE**, MODE (W/SHF) (W/LINK)	93-94	F	1	52472426
	8-E17	9.786	**VALVE**, MODE (W/SHF) (W/LINK)	95	F (L32, C60)	1	52472426
22.	8-C21	8.858	**VALVE**, TEMP (9.280) (AC-DELCO #15-5624)	95	F	1	52458714
	8-C21	8.858	**VALVE**, TEMP (& DEFR W/SPR) (9.280) (AC-DELCO #15-5624)	93-94	F	1	52458714
23.	8-C21	8.855	**RESISTOR**, BLO MOT (HTR ELEC) (9.275) (AC-DELCO #52467191)	93-95	F	1	52467191
24.	8-E17	9.786	**VALVE**, MODE (W/SHF) (W/LINK)	93-94	F	1	52472426
	8-E17	9.786	**VALVE**, MODE (W/SH) (UPR) (BI-LVL) (W/LINK)	95	F (LT1, C60)	1	52472426
	8-E17	9.786	**VALVE**, MODE (W/SHF) (W/LINK)	95	F (L32, C60)	1	52472426
25.	8-D23	9.280	**ACTUATOR**, MODE VLV (SNAP IN TYPE, BI-LVL VAC) (AC-DELCO #15-71579)	93-95	F	1	1996747

cardiagn.com

	8-D23	9.280	**ACTUATOR**, MODE VLV (UPR MODE VAC) (AC-DELCO #15-71975)	93-95	F (C60)	1	1996798
26.	8-D23	9.280	**ACTUATOR**, DEFR VLV (AC-DELCO #15-71976)	93-95	F (C60)	1	1996799
27.	8-E17	9.779	**SEAL**, DEFR VLV LINK	93-95	F (C60)	1	52458827
28.	8-D23	9.280	**ACTUATOR**, MODE VLV (SNAP IN TYPE, BI-LVL VAC) (AC-DELCO #15-71579)	93-95	F	1	1996747
	8-D23	9.280	**ACTUATOR**, MODE VLV (UPR MODE VAC) (AC-DELCO #15-71975)	93-95	F (C60)	1	1996798
29.	8-E17	9.786	**VALVE**, MODE (W/SHF) (W/LINK)	93-94	F	1	52472426
	8-E17	9.786	**VALVE**, MODE (W/SH) (UPR) (BI-LVL) (W/LINK)	95	F (LT1, C60)	1	52472426
	8-E17	9.786	**VALVE**, MODE (W/SHF) (W/LINK)	95	F (L32, C60)	1	52472426
30.		8.977	**SCREW**, HWH TAP M4.2X1.41X16 9.2-OD DRILPT BLK PZOR (MODE)	93-95		AR	11509135
31.	8-C21	8.858	**SEAL**, TEMP VLV HSG (DA STUD TO FRT CASE) (9.786)	93-95	F (C60)	1	52462555
32.	8-E17	9.786	**CASE**, AIR DISTR (FRT)	93-95	F (C60)	1	52458713
33.		8.921	**NUT-PUSH ON SPRING** FOR .153 TO .159 INCH DIA STUD, .70 OD, .35 THK, SAE1050 CRB .SPR .STL, PC (AIR INL VLV LINK) (AC-DELCO #11501937)	93-95		1	11501937
34.	8-C20	8.854	**SEAL**, HTR CORE (SI SEAL USED T/W 2 OF 52472456 TOP & BTM SEAL) (208.0X10.0X6.0) (9.211)	93-95	F	2	52455414
	8-C20	8.854	**SEAL**, HTR CORE (SI SEAL USED T/W 2 OF 52455414 TOP & BTM SEAL)	93-95	F	2	52472456
35.	8-C20	8.854	**CORE**, HTR (AC-DELCO #15-60051)	93-95	F	1	52468039
36.	8-C21	8.858	**VALVE**, TEMP	93-95	F (C60)	1	52458709
37.	8-C20	8.854	**CASE**, HTR FRT (TEMP VLV)	93-95	F (C60)	1	52458898
38.	8-C20	8.854	**SEAL**, HTR CORE TUBE	93-95	F	1	52458961
39.	8-C16	8.846	**CLAMP**, HTR CORE TUBE	93-95	F (C60)	1	52461638
40.		8.977	**BOLT-HFH**, M4.2X1.4X13, 11.6THD, 8.5OD, GM6010-M, POR, TAP (AC-DELCO #11508256)	93-95		AR	11508256
41.	8-C20	8.854	**SEAL**, HTR CORE SHRD	93-95	F (C60)	1	52458941
42.	8-C20	8.854	**CLAMP**, HTR CORE	93-95	F (C60)	1	3092086
43.	8-D14	9.211	**GASKET**, A/C EVPR & BLO MDL	93-95	F	1	52470041
44.	8-D9	9.172	**SWITCH**, A/C CYCLING (EVAP CORE TEMP) (9.275) (AC-DELCO #15-71978)	93-94	F (C60)	1	52458970
	8-D9	9.172	**SWITCH**, A/C CYCLING (EVAP CORE TEMP) (9.275) (AC-DELCO #15-71978)	95	F (LT1, C60)	1	52458970
	8-D9	9.172	**SWITCH**, A/C CYCLING (EVAP CORE TEMP) (9.275) (AC-DELCO #15-71978)	95	F (L32, C60)	1	52458970

cardiagn.com

45.	8-D14	9.210	RETAINER, A/C EVPR WAT FLTR (ROUND HEAD)	93-95	F (C60)	1	3040933
46.	8-D14	9.211	SEAL, A/C EVPR	93-95	F (C60)	1	52458972
47.		8.927	O-RING, 1/2 TUBE O .D., INSIDE DIA .364 (A), .094 (B), .005 (C), .003 (D) (A/C EVPR TXV (O RING)) (AC-DELCO #15-3984)	93-96	F (C60)	1	52454645
48.	8-D16	9.222	SEAL, A/C EVPR TXV (O RING) (BLACK) (AC-DELCO #15-30170)	93-94	F (L32, LT1, C60)	1	52458698
	8-D16	9.222	SEAL, A/C EVPR TXV (O RING) (BLACK) (AC-DELCO #15-30170)	95	F (LT1, C60)	1	52458698
49.	8-D15	9.213	VALVE, AUX A/C EVPR THERM EXPN (9.222) (AC-DELCO #15-5461)	93-94	F (C60)	1	52477944
	8-D15	9.213	VALVE, AUX A/C EVPR THERM EXPN (9.222) (AC-DELCO #15-5461)	95	F (LT1, C60)	1	52477944
	8-D15	9.213	VALVE, AUX A/C EVPR THERM EXPN (9.222) (AC-DELCO #15-5461)	95	F (L32, C60)	1	52477944
50.	8-D18	9.242	BOLT, A/C EVPR TXV TUBE CLIP	93-94	F (C60)	2	11515688
	8-D18	9.242	BOLT, A/C EVPR TXV TUBE CLIP	95	F (LT1, C60)	2	11515688
	8-D18	9.242	BOLT, A/C EVPR TXV TUBE CLIP	95	F (L32, C60)	2	11515688

RPO DEFINITIONS

C60 – AIR CONDITIONER,FRONT,MANUAL CONTROLS
LT1 – ENGINE-GAS, 8 CYL, 5.7L(5.7P),MFI,HO
L32 – ENGINE,3.4L,V6,(3.4S),SFI,OHV

cardiagn.com

3.	8-D14	9.211	**CASE**, AUX A/C EVPR & BLO UPR	95-97	F	1	52458965
4.	8-D14	9.211	**SEAL**, A/C EVPR (LINE TUBE FTG)	95-97	F	1	52458973
5.	8-D14	9.211	**BRACKET**, A/C EVPR	95-97	F (C60)	1	52458988
6.		8.977	**BOLT-HFH**, M4.2X1.4X13, 11.6THD, 8.5OD, GM6010-M, POR, TAP (AC-DELCO #11508256)	95-97	F	1	11508256
7.	8-D14	9.211	**GASKET**, A/C EVPR & BLO MDL	95-97	F	1	52470041
8.	8-D14	9.211	**CASE**, AUX A/C EVPR & BLO LWR	95-97	F	1	52458976
9.	8-C20	8.854	**SEAL**, HTR CORE SHRD	95-97	F (C60)	1	52458941
10.		8.977	**BOLT-HFH**, M4.2X1.4X13, 11.6THD, 8.5OD, GM6010-M, POR, TAP (AC-DELCO #11508256)	95-97	F	1	11508256
11.	8-C18	8.846	**CLAMP**, HTR CORE TUBE	95-97	F (C60)	1	52461638
12.	8-C20	8.854	**SEAL**, HTR CORE TUBE	95-97	F	1	52458961
13.	8-C20	8.854	**CASE**, HTR FRT (TEMP VLV)	95-97	F (C60)	1	52458898
14.	8-C21	8.858	**VALVE**, TEMP	95-97	F (C60)	1	52458709
15.	8-C20	8.854	**SEAL**, HTR CORE	95-97	F	2	52472456
16.	8-C20	8.854	**SEAL**, HTR CORE (208.0X10.0X6.0) (9.211)	95-97	F	2	52455414
17.	8-C20	8.854	**CORE**, HTR (AC-DELCO #15-60051)	95-97	F	1	52468039
18.	8-C20	8.854	**CASE**, HTR RR (9.211)	95-97	F	1	52458960
19.	8-C20	8.854	**CLAMP**, HTR CORE	95-97	F (C60)	1	3092066
20.	8-E17	9.786	**VALVE**, MODE (INCLS 26, 33) (W/LINK)	95-97	F (L36, C60)	1	52472426
	8-E17	9.786	**VALVE**, MODE (W/SH) (UPR) (BI-LVL) (INCLS 26, 33) (W/LINK)	95-96	F (LT1, C60)	1	52472426
21.	8-C20	8.854	**CASE**, HTR (RR) (CVR)	95-97	F (C60)	1	52458712
22.	8-E17	9.786	**SEAL**, AIR DISTR CASE	95-97	F (C60)	1	52464960
23.	8-D23	9.281	**HARNESS**, AIR VLV ACTR VAC	95-97	F (C60)	1	52458911
24.	8-D15	9.215	**RESISTOR**, BLO MOT (HTR ELEC) (9.275) (AC-DELCO #52467191)	95-97	F	1	52467191
25.	8-C21	8.858	**VALVE**, TEMP (9.280) (AC-DELCO #15-5624)	95-97	F	1	52458714
26.	8-E17	9.786	**VALVE**, MODE (PART OF 20) (W/LINK)	95-96	F (L36, C60)	1	52472426
	8-E17	9.786	**VALVE**, MODE (W/SH) (UPR) (BI-LVL) (PART OF 20) (W/LINK)	95-96	F (LT1, C60)	1	52472423
	8-E17	9.786	**VALVE**, MODE (W/SHF) (PART OF 20) (W/LINK)	95	F (L32, C60)	1	52472426
		N.S.	**VALVE**, MODE (PART OF 20)	97			
27.		8.977	**SCREW**, HWH TAP M4.2X1.41X16 9.2-OD DRILPT BLK PZOR	95-97	F	1	11509135
28.	8-D23	9.280	**ACTUATOR**, MODE VLV (AC-DELCO #15-71975)	95-97	F	1	1996798
29.		8.921	**RETAINER**, PUSH ON TYPE "E" (MODE VLV ACTR)	95-97	F	1	9428633
30.	8-D23	9.280	**ACTUATOR**, DEFR VLV (AC-DELCO #15-71976)	95-97	F (C60)	1	1996799
31.	8-E17	9.779	**SEAL**, DEFR VLV LINK	95-97	F (C60)	1	52458827

cardiagn.com

32.	8–D23	9.280	**ACTUATOR**, MODE VLV (AC–DELCO #15–71579)	95	F	1	1996747
	8–D23	9.280	**ACTUATOR**, VAC (AC–DELCO #15–71579)	96–97	F	1	1996747
33.	8–E17	9.786	**VALVE**, MODE (PART OF 20) (W/LINK)	95–96	F (L36, C60)	1	52472426
	8–E17	9.786	**VALVE**, MODE (W/SH) (UPR) (BI–LVL) (PART OF 20) (W/LINK)	95–96	F (LT1, C60)	1	52472426
	8–E17	9.786	**VALVE**, MODE (W/SHF) (PART OF 20) (W/LINK)	95	F (L32, C60)	1	52472426
		N.S.	**VALVE**, MODE (PART OF 20)	97			
34.		8.921	**NUT–PUSH ON SPRING** FOR .153 TO .159 INCH DIA STUD, .70 OD, .35 THK, SAE1050 CRB .SPR .STL, PC (ELEC ACTR (PUSH ON)) (AC–DELCO #11501937)	95–97	F	1	11501937
35.	8–C21	8.858	**SEAL**, TEMP VLV HSG (DA STUD TO FRT CASE) (9.786)	95–97	F (C60)	1	52462555
36.	8–E17	9.786	**CASE**, AIR DISTR (FRT)	95–97	F (C60)	1	52458713
37.		N.S.	**BOLT**, BLO MOT				
38.	8–C21	8.855	**MOTOR**, BLO (W/IMPLR) (AC–DELCO #15–8760)	95–97	F (C60)	1	52481553
	8–D15	9.215	**MOTOR**, BLO (W/IMPLR) (8.855) (AC–DELCO #15–8760)	95–97	F (C60)	1	52481553
39.	8–C21	8.856	**INSULATOR**, BLO MOT (9.216)	95–97	F	1	3091179
40.	8–D15	9.216	**IMPELLER**, HTR & A/C BLO (8.857) (AC–DELCO #15–8761)	95–97	F (C60)	1	52472650
41.	8–D20	9.275	**SEAL**, A/C REFRIG TEMP SEN (9.211)	95–97	F	1	52461203
42.	8–D14	9.210	**RETAINER**, A/C EVPR WAT FLTR (ROUND HEAD)	95–97	F (C60)	1	3040933
43.	8–D14	9.210	**FILTER**, A/C EVPR AIR	95–97	F (C60)	1	52458971
44.	8–D14	9.210	**EVAPORATOR**, A/C (W/CASE) (AC–DELCO #15–6930)	95–97	F (L36, C60)	1	52474506
	8–D14	9.210	**EVAPORATOR**, A/C (W/CASE) (AC–DELCO #15–6752)	96	F (LT1, C60)	1	52467019
	8–D14	9.210	**EVAPORATOR**, A/C (AC–DELCO #15–6935)	97	F (LT1, C60)	1	52474503
45.	8–D14	9.211	**SEAL**, A/C EVPR (CORE)	95–97	F	1	52458972
46.	8–D14	9.211	**SEAL**, A/C EVPR & BLO MDL	95–97	F	1	52481317
47.	8–D23	9.280	**VALVE**, HTR & A/C CONT VAC (STAMPED 6648) (3.885) (AC–DELCO #14056648)	95–97	F	1	14056648
	8–D23	9.280	**VALVE**, HTR & A/C CONT VAC (AC–DELCO #15–71967)	95–96	F (C60)	1	16159553

RPO DEFINITIONS

C60 – AIR CONDITIONER,FRONT,MANUAL CONTROLS
LT1 – ENGINE–GAS, 8 CYL, 5.7L(5.7P),MFI,HO
L32 – ENGINE,3.4L,V6,(3.4S),SFI,OHV
L36 – ENGINE GAS, 6 CYL, 3.8K, MFI, V6, HO (ERV6 SERIES)

cardiagn.com

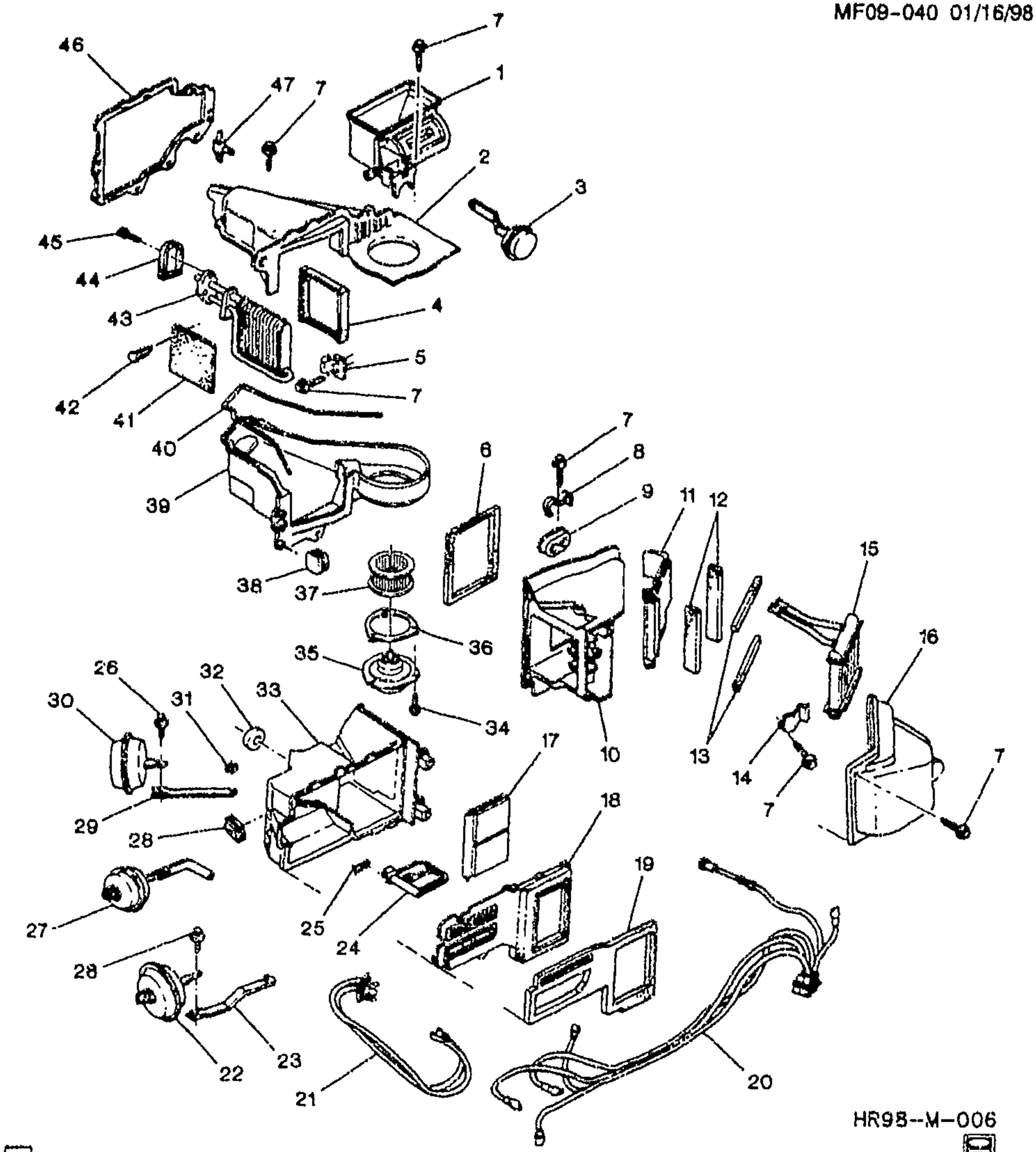

mx

MF09-040

1998-2002 F A/C & HEATER MODULE ASM (C60)

1.	8-D14	9.211	HOUSING, AIR INL (AIR INL & OTLT) (W/VLV)	98-02	F (C60)	1	52461466
2.	8-D14	9.211	CASE, A/C EVPR UPR	98-02	F (C60)	1	52458965
3.	8-D23	9.280	ACTUATOR, I/S AIR VLV (AC-DELCO #15-71977)	98-02	F (C60)	1	1996800
4.	8-D14	9.211	SEAL, A/C EVPR (*KIT1)	98	F	1	52458973

cardiagn.com

		N.S.	SEAL, A/C EVPR (*KIT1)	99-02	F	1	
5.	8-D14	9.211	BRACKET, A/C EVPR	98-02	F (C60)	1	52458968
6.	8-C20	8.854	SEAL, HTR CORE SHRD (*KIT1, KIT2)	98-02	F (C60)	1	52458941
7.		N.S.	BOLT, HTR & A/C EVPR MDL			AR	
8.	8-C19	8.846	CLAMP, HTR CORE TUBE	98-02	F (C60)	1	52461638
9.	8-C20	8.854	SEAL, HTR CORE TUBE (*KIT1, KIT2)	98-02	F	1	52458961
10.	8-C20	8.854	CASE, HTR FRT (TEMP VLV)	98-02	F (C60)	1	52458898
11.	8-C21	8.858	VALVE, TEMP	98-02	F (C60)	1	52458709
12.	8-C20	8.854	SEAL, HTR CORE TUBE (*KIT2)	98-02	F	1	52458961
13.	8-C20	8.854	CASE, HTR FRT (TEMP VLV) (*KIT2)	98-02	F (C60)	1	52458898
14.	8-C20	8.854	CLAMP, HTR CORE	98-02	F (C60)	1	3092086
15.	8-C20	8.854	CORE, HTR (AC-DELCO #15-60051)	98-02	F	1	52468039
16.	8-C20	8.854	CASE, HTR (RR) (CVR) (RR)	98-02	F (C60)	1	52458712
17.	8-E17	9.786	VALVE, MODE (INCLS 23, 29, 31) (W/LINK)	98-02	F (C60)	1	52472426
18.	8-C20	8.854	CASE, HTR (RR) (CVR)	98-02	F (C60)	1	52458712
19.	8-E17	9.786	SEAL, AIR DISTR CASE	98-02	F (C60)	1	52464968
20.	8-D23	9.261	HARNESS, AIR VLV ACTR VAC	98-02	F (C60)	1	52458011
21.	8-D15	9.215	RESISTOR, BLO MOT (HTR ELEC) (9.275) (AC-DELCO #52467191)	98-02	F	1	52467191
22.	8-D23	9.280	ACTUATOR, MODE VLV (SNAP IN TYPE, BI-LVL VAC) (AC-DELCO #15-71579)	98-02	F (C60)	1	1996747
	8-D23	9.280	ACTUATOR, MODE VLV (UPR MODE VAC) (AC-DELCO #15-71975)	98-02	F (C60)	1	1996798
	8-D23	9.280	ACTUATOR, VAC (AC-DELCO #15-71579)	98-02	F	1	1996747
23.		N.S.	VALVE, MODE (PART OF 17)			1	
24.	8-E17	9.779	VALVE, DEFR (9.280) (AC-DELCO #15-5624) (16 HOLE MTG) (ROCKWELL AUTO ADJ)	98-02	F	1	52458714
25.	8-E17	9.786	SPRING, MODE VLV SHF TORS	98-02	F (C60)	1	3004308
26.		8.977	SCREW, HWH M4.2X1.41X13 AB-PT 6010M OB	98-02		2	11503550
27.	8-D23	9.280	ACTUATOR, DEFR VLV (AC-DELCO #15-71976)	98-02	F (C60)	1	1996799
28.	8-E17	9.779	SEAL, DEFR VLV LINK	98-02	F (C60)	1	52458827
29.		N.S.	VALVE, MODE (PART OF 17)			1	
30.	8-D23	9.280	ACTUATOR, MODE VLV (SNAP IN TYPE, BI-LVL VAC) (AC-DELCO #15-71579)	98-02	F (C60)	1	1996747
	8-D23	9.280	ACTUATOR, MODE VLV (UPR MODE VAC) (AC-DELCO #15-71975)	98-02	F (C60)	1	1996798
31.		8.921	NUT-PUSH ON SPRING FOR .153 TO .159 INCH DIA STUD, .70 OD, .35 THK, SAE1050 CRB .SPR .STL, PC (PART OF 17) (AC-DELCO #11501937)	98-02		1	11501937

cardiagn.com

32.	8–C21	8.858	**SEAL**, TEMP VLV HSG (DA STUD TO FRT CASE) (9.786)	98–02	F (C60)	1	52462555
33.	8–E17	9.786	**CASE**, AIR DISTR (FRT)	98–02	F (C60)	1	52458713
34.		N.S.	**BOLT**, BLO MOT			3	
35.	8–C21	8.855	**MOTOR**, BLO (W/IMPLR) (INCLS 36, 37) (AC–DELCO #15–8760)	98–02	F (C60)	1	52481553
	8–D15	9.215	**MOTOR**, BLO (W/IMPLR) (INCLS 36, 37) (8.855) (AC–DELCO #15–8760)	98–02	F (C60)	1	52481553
36.		N.S.	**INSULATOR**, BLO MOT (PART OF 35)		F	1	
37.	8–C21	8.857	**IMPELLER**, BLO (PART OF 35) (AC–DELCO #15–8761)	98–02	F (C60)	1	52472650
38.	8–C21	8.855	**MOTOR**, BLO (W/IMPLR) (*KIT1) (AC–DELCO #15–8760)	98–02	F (C60)	1	52481553
	8–D15	9.215	**MOTOR**, BLO (W/IMPLR) (*KIT1) (8.855) (AC–DELCO #15–8760)	98–02	F (C60)	1	52481553
39.	8–D14	9.211	**CASE**, A/C EVPR LWR	98–02	F	1	52458976
40.	8–D14	9.211	**GASKET**, A/C EVPR & BLO MDL (*KIT1)	98–02	F	1	52470041
41.	8–D14	9.210	**FILTER**, A/C EVPR AIR	98–02	F (C60)	1	52456971
42.	8–D14	9.210	**RETAINER**, A/C EVPR WAT FLTR (ROUND HEAD)	98–02	F (C60)	1	3040933
43.	8–D14	9.210	**EVAPORATOR KIT**, A/C (INCLS 45) (AC–DELCO #15–6947)	98–02	F (C60)	1	52477913
44.	8–D14	9.210	**EVAPORATOR KIT**, A/C (*KIT1) (AC–DELCO #15–6947)	98–02	F (C60)	1	52477913
45.		N.S.	**BOLT**, A/C EVPR & BLO MDL (BOLT, EVAPORATOR (PART OF 43))			2	
46.	8–D14	9.211	**SEAL**, A/C EVPR & BLO MDL	98–02	F	1	52481317
47.	8–D23	9.281	**VALVE**, HTR & A/C CONT VAC SCE HOSE CHK (STAMPED 3271)	98–02	F (C60)	1	15733271

SERVICE KITS

1.	8–D14	9.211	**SEAL KIT**, A/C EVPR (INCLS 4, 6, 9, 38, 40, 44)	98–02	F (C60)	1	52480245
2.	8–C18	8.845	**SEAL KIT**, HTR (INCLS 6, 9, 12, 13)	98–02	F (C60)	1	52480305

RPO DEFINITIONS
C60 – AIR CONDITIONER,FRONT,MANUAL CONTROLS

cardiagn.com

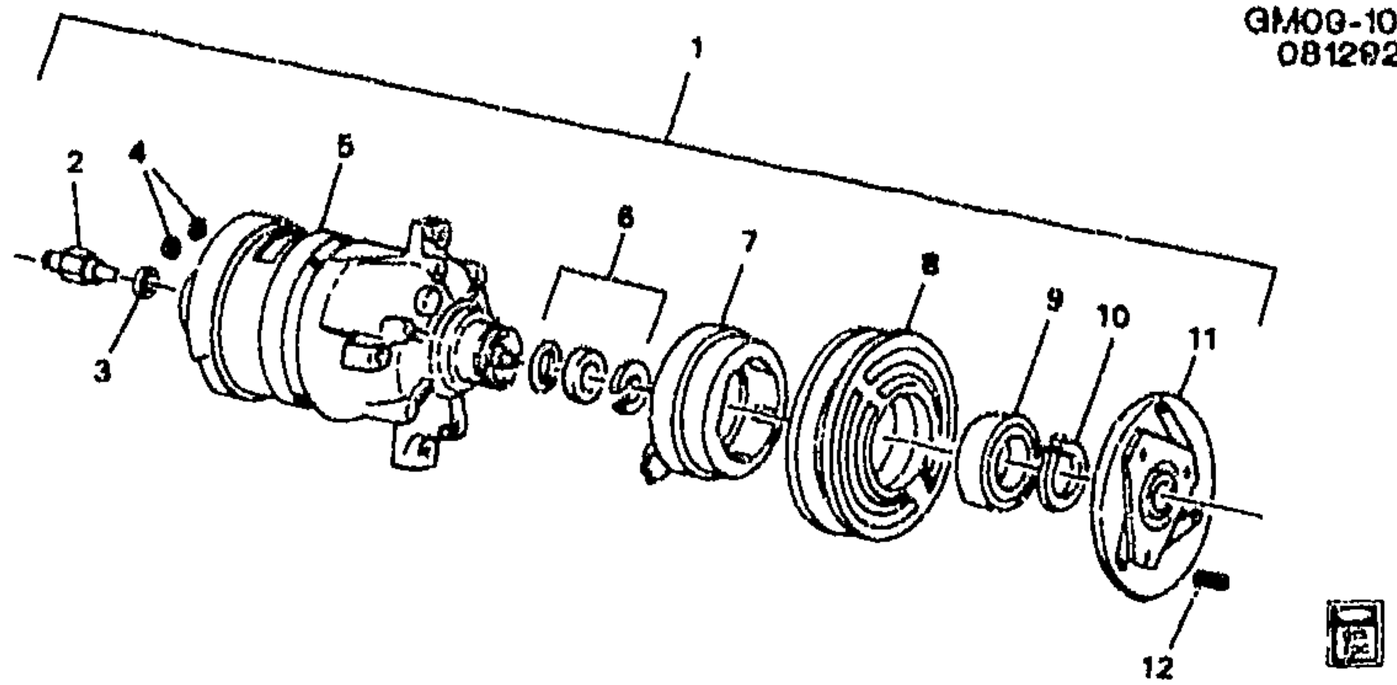

GM09-105F

1993-1994 F A/C COMPRESSOR ASM/HD6

1.	8-D8	9.170	**COMPRESSOR**, A/C (H6 W/CLUTCH, R134A) (INCLS 2-11) (AC-DELCO #15-20046)	93	F (LT1, C60)	1	1136490
	8-D8	9.170	**COMPRESSOR**, A/C (H6 W/CLUTCH, R134A) (INCLS 2-11) (AC-DELCO #15-20178)	93-94	F (L32, C60)	1	1136535
	8-D8	9.170	**COMPRESSOR**, A/C (H6 W/CLUTCH, R134A) (INCLS 2-11) (AC-DELCO #15-20178)	94	F (LT1, C60)	1	1136535
		8.800	**REFRIGERANT-A/C R134A** (AC DELCO) (AC-DELCO #15-119)	93-94	.....	AR	12356150
		8.800	**OIL**, REFRIGERANT - 134A (SADEN) 250CC FOR USE ONLY ON SADEN A/C COMPRESSORS SD7H15 USING 134A REFRIGERANT (A/C CMPR)	93-94	.....	AR	12345923
2.	8-D9	9.172	**VALVE**, A/C CMPR PRESS RLF (PART OF 1) (W/O-RING) (W/ ENGLISH THREAD) (9.178) (AC-DELCO #15-5415)	93-94	F (C60)	1	6552743
3.	8-D9	9.175	**SEAL KIT**, A/C CMPR PORT (O RING) (PART OF 1) (9.172) (AC-DELCO #15-30999)	93-94	F (C60)	1	2724959
4.	8-D16	9.222	**SEAL KIT**, A/C CMPR & CNDSR HOSE MANIF (PART OF 1) (CONTAINS 2 SEALS 5/8") (AC-DELCO #15-2722)	93-94	F (C60)	2	2724577
5.		N.S.	**COMPRESSOR**, A/C (W/O CLU) (PART OF 1)		.....		
6.	8-D9	9.175	**SEAL KIT**, A/C CMPR SHF (PART OF 1) (W/1 O-RING) (9.170) (AC-DELCO #15-2292)	93-94	F (C60)	1	2724319
7.	8-D12	9.186	**COIL**, A/C CLU (PART OF 1) (W/HSG) (MATES W/CONN 12101937) (AC-DELCO #15-4440)	93-94	F (C60)	1	6552423
8.	8-D11	9.180	**PULLEY**, A/C CMPR (PART OF 1) (AC-DELCO #15-20038)	93	F (LT1, C60)	1	6580037

cardiagn.com

	8-D11	9.180	PULLEY, A/C CMPR (PART OF 1) (AC-DELCO #15-4615)	93-94	F (L32, C60)	1	6580044
	8-D11	9.180	PULLEY, A/C CMPR (PART OF 1) (AC-DELCO #15-4615)	94	F (LT1, C60)	1	6580044
9.	8-D12	9.181	BEARING, A/C CMPR PUL (PART OF 1) (9.188) (AC-DELCO #15-2802)	93	F (LT1, C60)	1	6559469
	8-D12	9.181	BEARING, A/C CMPR PUL (PART OF 1) (9.188) (AC-DELCO #15-2802)	93	F (L32, C60)	1	6559469
	8-D12	9.181	BEARING, A/C CMPR PUL (PART OF 1) (9.188) (AC-DELCO #15-2802)	94	F (C60)	1	6559469
10.	8-D13	9.188	RING, A/C CLU ROT BRG RET (PART OF 1) (AC-DELCO #15-4267)	93-94	F (C60)	1	6555329
11.	8-D13	9.188	CLUTCH, A/C (CLUTCH DRIVER) (PART OF 1) (AC-DELCO #15-4692)	93-94	F (C60)	1	6581043
12.	8-D13	9.188	KEY, A/C CLU (AC-DELCO #15-4262)	93-94	F (C60)	1	6557411

RPO DEFINITIONS
C60 - AIR CONDITIONER,FRONT,MANUAL CONTROLS
LT1 - ENGINE-GAS, 8 CYL, 5.7L(5.7P),MFI,HO
L32 - ENGINE,3.4L,V6,(3.4S),SFI,OHV

cardiagn.com

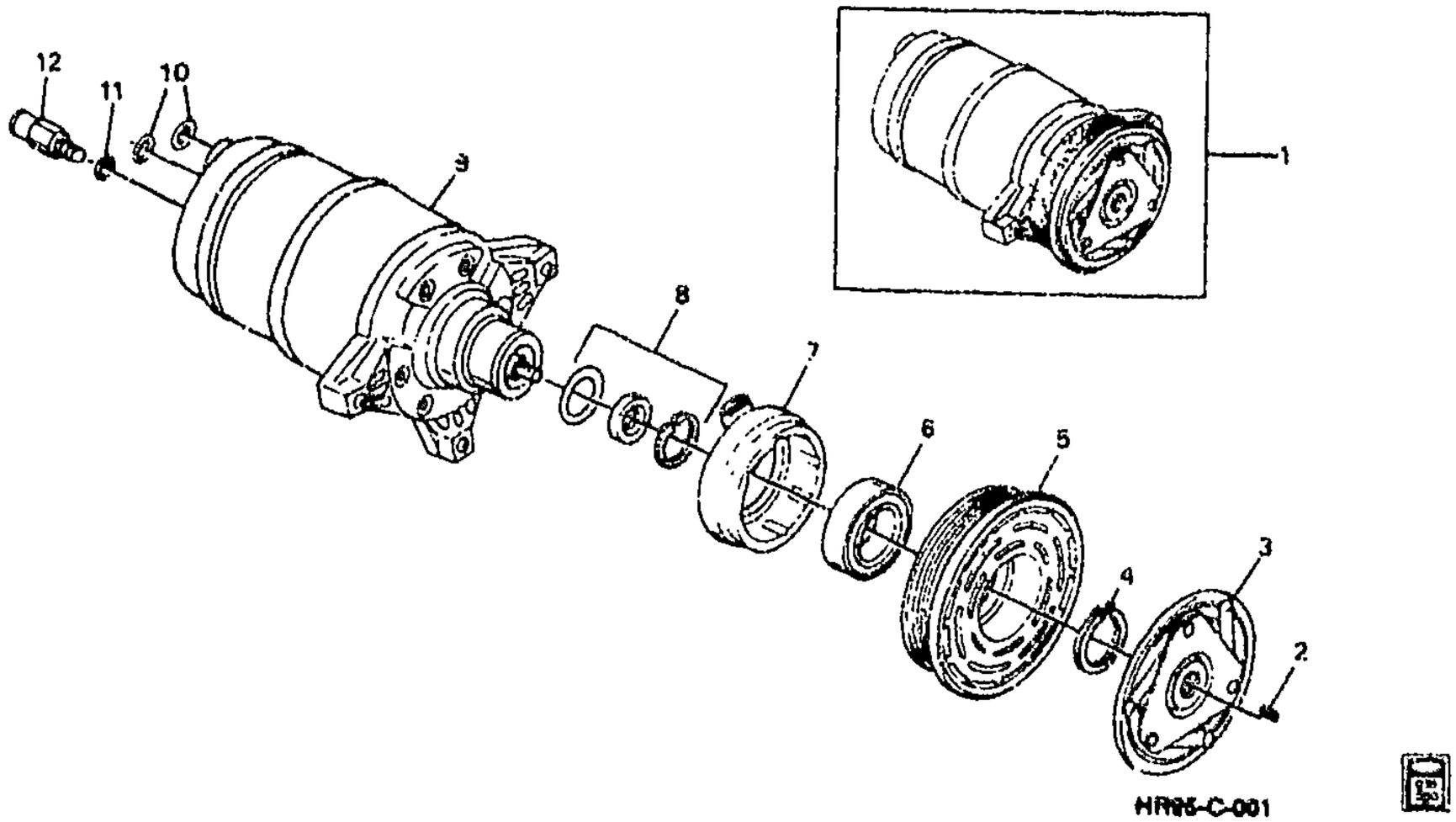

GM09-220F

1995 F A/C COMPRESSOR ASM/HD6 (L32/3.4S)
1995–1996 F A/C COMPRESSOR ASM/HD6 (LT1/5.7P)

1.	8-D8	9.170	**COMPRESSOR**, A/C (H6 W/CLUTCH, R134A) (AC-DELCO #15-20178)	95	F (L32, C60)	1	1136535
	8-D8	9.170	**COMPRESSOR**, A/C (H6 W/CLUTCH, R134A) (AC-DELCO #15-20178)	95-96	F (LT1 C60)	1	1136535
		8.800	OIL, REFRIGERANT – 134A (SADEN) 250CC FOR USE ONLY ON SADEN A/C COMPRESSORS SD7H15 USING 134A REFRIGERANT (A/C CMPR)	95-96	.....	AR	12345923
2.	8-D13	9.188	**KEY**, A/C CLU (AC-DELCO #15-4262)	95-96	F (LT1, C60)	1	6557411
	8-D13	9.188	**KEY**, A/C CLU (AC-DELCO #15-4262)	95	F (L32, C60)	1	6557411
3.	8-D13	9.188	**CLUTCH**, A/C (CLUTCH DRIVER) (AC-DELCO #15-4692)	95-96	F (LT1, C60)	1	6581043
	8-D13	9.188	**CLUTCH**, A/C (USE W/CMPR STAMPED 1136508) (AC-DELCO #15-4692)	95	F (L32, C60)	1	6581043
4.	8-D13	9.188	**RING**, A/C CLU ROT BRG RET (AC-DELCO #15-4267)	95-96	F (LT1, C60)	1	6555329
	8-D13	9.188	**RING**, A/C CLU ROT BRG RET (AC-DELCO #15-4267)	95	F (L32, C60)	1	6555329
5.	8-D11	9.180	**PULLEY**, A/C CMPR (INCL #6) (AC-DELCO #15-4615)	96	F (LT1, C60)	1	6580044

cardiagn.com

	8-D11	9.150	**PULLEY**, A/C CMPR (USE W/CMPR STAMPED 1136491) (INCL #6) (AC-DELCO #15-4615)	95	F (L32, C60)	1	6580044
	8-D11	9.180	**PULLEY**, A/C CMPR (USE W/CMPR STAMPED 1136491, 1136515) (INCL #6) (AC-DELCO #15-4615)	95-96	F (LT1, C60)	1	6580044
	8-D11	9.180	**PULLEY**, A/C CMPR (USE W/CMPR STAMPED 1136508) (INCL #6) (AC-DELCO #15-4615)	95	F (L32, C60)	1	6580044
	8-D11	9.180	**PULLEY**, A/C CMPR (USE W/CMPR STAMPED 1136516) (INCL #6) (AC-DELCO #15-4615)	95	F (LT1, C60)	1	6580044
6.	8-D12	9.181	**BEARING**, A/C CMPR PUL (ALSO PART OF #5) (9.188) (AC-DELCO #15-2802)	95-96	F (C60)	1	6559469
7.	8-D12	9.186	**COIL**, A/C CLU (W/HSG) (MATES W/CONN 12101937) (AC-DELCO #15-4440)	95-96	F (LT1, C60)	1	6552423
	8-D12	9.186	**COIL**, A/C CLU (W/HSG) (MATES W/CONN 12101937) (AC-DELCO #15-4440)	95	F (L32, C60)	1	6552423
8.	8-D9	9.175	**SEAL KIT**, A/C CMPR SHF (W/1 O-RING) (9.170) (AC-DELCO #15-2292)	95	F (L32, C60)	1	2724319
	8-D9	9.175	**SEAL KIT**, A/C CMPR SHF (USE W/CMPR STAMPED 1136491) (W/1 O-RING) (9.170) (AC-DELCO #15-2292)	95	F (LT1, C60)	1	2724319
9.		N.S.	**COMPRESSOR**, A/C (W/O CLU) (PART OF #1)				
10.	8-D16	9.222	**SEAL KIT**, A/C CMPR & CNDSR HOSE MANIF (CONTAINS 2 SEALS 5/8") (AC-DELCO #15-2722)	95-96	F (C60)	2	2724577
11.		8.927	**SEAL**, A/C CMPR PRESS RLF VLV (O RING) (5/PKG) (.35 ID X .072 THICK) (ALSO PART OF #12) (*KIT1) (AC-DELCO #15-30570)	95-96		AR	52450548
12.	8-D9	9.172	**VALVE**, A/C CMPR PRESS RLF (INLC #11) (W/O-RING) (W/ ENGLISH THREAD) (9.178) (AC-DELCO #15-5415)	95-96	F (C60)	1	6552743

SERVICE KITS

1.	8-D9	9.175	**SEAL KIT**, A/C CMPR PORT (O RING) (INCL #11) (9.172) (AC-DELCO #15-30999)	95-96	F (C60)	1	2724959

RPO DEFINITIONS

C60 - AIR CONDITIONER,FRONT,MANUAL CONTROLS
LT1 - ENGINE-GAS, 8 CYL, 5.7L(5.7P),MFI,HO
L32 - ENGINE,3.4L,V6,(3.4S),SFI,OHV

cardiagn.com

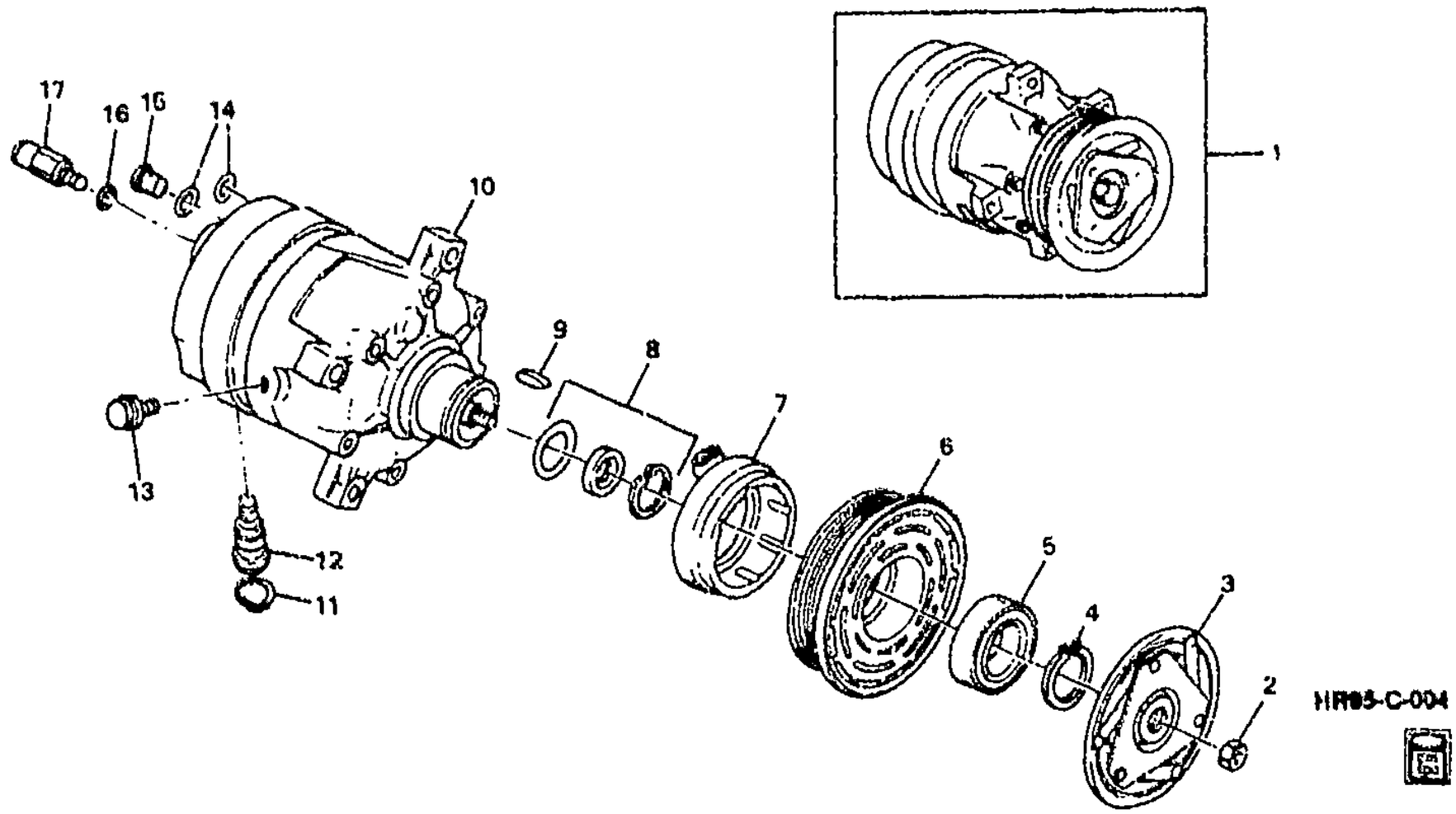

GM09-222F

1995-2002 F A/C COMPRESSOR ASM/V5 (L36/3.8K)

1.	8-D8	9.170	**COMPRESSOR**, A/C (INCLS 2-9, 12-15, 17) (AC-DELCO #15-20454)	02	F (L36, C60)	1	1135436
	8-D8	9.170	**COMPRESSOR**, A/C (V5 W/CLUTCH) (INCLS 2-9, 12-15, 17) (AC-DELCO #15-20342) ...	95-02	F (L36, C60)	1	1135278
		8.800	**OIL**, REFRIGERANT - 134A (SADEN) 250CC FOR USE ONLY ON SADEN A/C COMPRESSORS SD7H15 USING 134A REFRIGERANT (A/C CMPR)	95-02	.....	AR	12345923
2.	8-D12	9.181	**NUT**, A/C CLU (PART OF 1) (HEX LOCK, M9X1.25X6.14, SAE 1110, STL, ZP) (AC-DELCO #15-4263)	95-02	F (L36, C60)	1	6557414
3.	8-D13	9.188	**CLUTCH**, A/C (PART OF 1) (AC-DELCO #15-4719)	95-02	F (L36, C60)	1	6582085
	8-D13	9.188	**CLUTCH**, A/C (CLUTCH DRIVER) (PART OF 1) (9.180) (AC-DELCO #15-4685)	01-02	F (L36, C60)	1	6581515
4.	8-D12	9.181	**RING**, A/C CMPR PUL BRG RET (PART OF 1) (AC-DELCO #15-2786)	95-02	F (L36, C60)	1	6557617
5.	8-D12	9.181	**BEARING**, A/C CMPR PUL (PART OF 1, 6) (9.188) (AC-DELCO #15-2802)	95-97	F (C60)	1	6559469
	8-D12	9.181	**BEARING**, A/C CMPR PUL (PART OF 1, 6) (9.188) (AC-DELCO #15-2802)	98-02	F (L36, C60)	1	6559469

cardiagn.com

6.	8-D11	9.180	**PULLEY**, A/C CMPR (PART OF 1) (INCL 5) (PART OF ACCESSORY TENSIONER ASSEMBLY) (AC-DELCO #15-4663)	90-02	F (L36)	1	24506756
	8-D11	9.180	**PULLEY**, A/C CMPR (PULLEY TO COMPRESSOR) (PART OF 1) (INCL 5) (AC-DELCO #15-4609)	95-02	F (L36, C60)	1	6580046
7.	8-D12	9.186	**COIL**, A/C CLU (PART OF 1) (AC-DELCO #15-4439)	95-02	F (L36, C60)	1	6552422
8.	8-D9	9.175	**SEAL KIT**, A/C CMPR SHF (PART OF 1) (W/1 O-RING) (9.170) (AC-DELCO #15-2292)	95-01	F (L36, C60)	1	2724319
	8-D9	9.175	**SEAL KIT**, A/C CMPR SHF (PART OF 1) (9.172) (AC-DELCO #15-30999)	01-02	F (L36, C60)	1	2724959
	8-D9	9.175	**SEAL KIT**, A/C CMPR SHF (PART OF 1) (AC-DELCO #15-31231) .	01-02	F (L36, C60)	1	6595251
9.	8-D13	9.188	**KEY**, A/C CLU (PART OF 1) (AC-DELCO #15-46)	95-02	F (L36, C60)	1	6555320
10.	8-D8	9.170	**COMPRESSOR**, A/C (PART OF 1) (AC-DELCO #15-20454)	02	F (L36, C60)	1	1135436
	8-D8	9.170	**COMPRESSOR**, A/C (V5 W/CLUTCH) (PART OF 1) (AC-DELCO #15-20342)	95-02	F (L36, C60)	1	1135278
		N.S.	**COMPRESSOR**, A/C (W/O CLU) (PART OF 1)		.....		
11.	8-D12	9.181	**RING**, A/C CMPR PUL BRG RET (PART OF 12) (AC-DELCO #15-2786)	95-02	F (L36, C60)	1	6557617
12.	8-D10	9.176	**VALVE**, A/C CMPR VAR DISPL CONT (PART OF 1) (INCL 11) (AC-DELCO #15-5411)	95-02	F (L36, C60)	1	2724511
13.	8-D8	9.170	**PLUG**, A/C CMPR OIL DRN (PART OF 1) (W/WASHER) (AC-DELCO #15-2347)	95-02	F (L36, C60)	1	6557638
14.	8-D16	9.222	**SEAL KIT**, A/C CMPR & CNDSR HOSE MANIF (PART OF 1) (CONTAINS 2 SEALS 5/8") (AC-DELCO #15-2722)	95-02	F (C60)	2	2724577
15.	8-D9	9.172	**SCREEN**, A/C CMPR SUC (PART OF 1) (AC-DELCO #15-2817) ..	95-02	F (L36, C60)	1	6559238
16.		8.927	**SEAL**, A/C CMPR PRESS RLF VLV (O RING) (5/PKG) (.35 ID X .072 THICK) (PART OF 17) (*KIT1) (AC-DELCO #15-30570)	95-02	.....	AR	52450548
17.	8-D9	9.172	**VALVE**, A/C CMPR PRESS RLF (PART OF 1) (INCLS 16) (W/O-RING) (W/ ENGLISH THREAD) (9.178) (AC-DELCO #15-5415)	95-97	F (C60)	1	6552743

cardiagn.com

8-D11	9.178	VALVE, A/C CMPR PRESS RLF (PART OF 1) (INCLS 16) (W/O-RING) (W/ ENGLISH THREAD) (AC-DELCO #15-5415)	98	F (L36, C60)	1	6552743
8-D11	9.178	VALVE, A/C CMPR PRESS RLF (PART OF 1) (INCLS 16) (CONTAINS VALVE, O-RING, AND AN ADAPTER) (AC-DELCO #15-5711)	99-02	F (L36, C60)	1	2724982

SERVICE KITS

1.	8-D9	9.175	SEAL KIT, A/C CMPR PORT (O RING) (INCLS 16) (9.172) (AC-DELCO #15-30999)	95-97	F (C60)	1	2724959
	8-D9	9.175	SEAL KIT, A/C CMPR PORT (O RING) (SW, HPRV) (INCLS 16) (9.172) (AC-DELCO #15-30999)	98-02	F (L36, C60)	1	2724959

RPO DEFINITIONS
C60 – AIR CONDITIONER,FRONT,MANUAL CONTROLS
L36 – ENGINE GAS, 6 CYL., 3.8K, MFI, V6, HO (ERV6 SERIES)

cardiagn.com

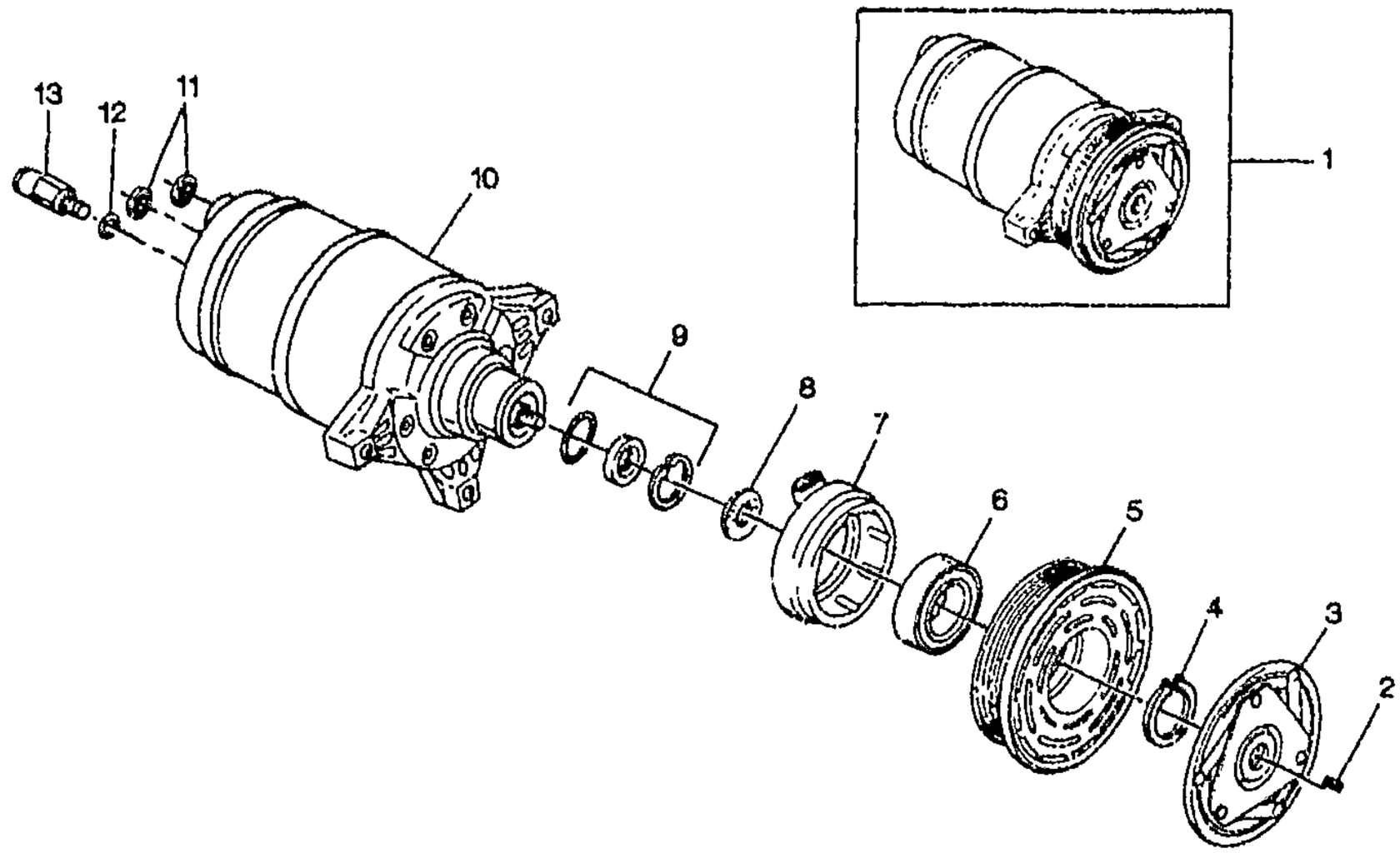

HR98-C-003

GM09-197

1997 F A/C COMPRESSOR ASM/HD6(LT1/5.7P)

1.	8-D8	9.170	**COMPRESSOR**, A/C (H6 W/CLUTCH, R134A) (INCLS 2-6, 8-9, 11, 13) (AC-DELCO #15-20178)	97 F (LT1, C60)	1	1136535
		8.800	**OIL**, REFRIGERANT -- 134A (SADEN) 250CC FOR USE ONLY ON SADEN A/C COMPRESSORS SD7H15 USING 134A REFRIGERANT (A/C CMPR)	97	AR	12345923
2.	8-D13	9.188	**KEY**, A/C CLU (PART OF 1) (AC-DELCO #15-4262)	97 F (LT1, C60)	1	6557411
3.	8-D13	9.108	**CLUTCH**, A/C (CLUTCH DRIVER) (PART OF 1) (AC-DELCO #15-4692)	97 F (LT1, C60)	1	6581043
4.	8-D13	9.188	**RING**, A/C CLU ROT BRG RET (PART OF 1) (AC-DELCO #15-4267)	97 F (LT1, C60)	1	6555329
5.	8-D11	9.180	**PULLEY**, A/C CMPR (PART OF 1) (AC-DELCO #15-4615)	97 F (LT1, C60)	1	6580044
6.	8-D12	9.181	**BEARING**, A/C CMPR PUL (PART OF 1) (9.188) (AC-DELCO #15-2802)	97 F (C60)	1	6559469

cardiagn.com

7.	8-D12	9.186	**COIL**, A/C CLU (W/HSG) (MATES W/CONN 12101937) (AC-DELCO #15-4440)	97	F (LT1, C60)	1	6552423
8.	8-D9	9.175	**SEAL KIT**, A/C CMPR SHF (PART OF 1, 9) (INCLS INSTRUCTION SHEET, RING & SEALS) (AC-DELCO #15-30948)	97	F (LT1, C60)	1	2724954
9.	8-D9	9.175	**SEAL KIT**, A/C CMPR SHF (PART OF 1) (INCLS 8) (INCLS INSTRUCTION SHEET, RING & SEALS) (AC-DELCO #15-30948)	97	F (LT1, C60)	1	2724954
10.		N.S.	**COMPRESSOR**, A/C (W/O CLU) (PART OF 1)		.....		
11.	8-D16	9.222	**SEAL KIT**, A/C CMPR & CNDSR HOSE MANIF (PART OF 1) (CONTAINS 2 SEALS 5/8") (AC-DELCO #15-2722)	97	F (C60)	2	2724577
12.	8-D16	9.222	**SEAL**, A/C CMPR PRESS RLF VLV (O RING) (PART OF 13) (W/5 VALVE SEALS) (AC-DELCO #15-30992)	97	F (LT1, C60)	1	2724958
13.	8-D9	9.172	**VALVE**, A/C CMPR PRESS RLF (PART OF 1) (INCLS 12) (W/O-RING) (W/ ENGLISH THREAD) (9.178) (AC-DELCO #15-5415)	97	F (C60)	1	6552743

SERVICE KITS

1.	8-D9	9.175	**SEAL KIT**, A/C CMPR PORT (O RING) (9.172) (AC-DELCO #15-30999)	97	F (C60)	1	2724959

RPO DEFINITIONS
C60 – AIR CONDITIONER,FRONT,MANUAL CONTROLS
LT1 – ENGINE-GAS, 8 CYL, 5.7L(5.7P),MFI,HO

cardiagn.com

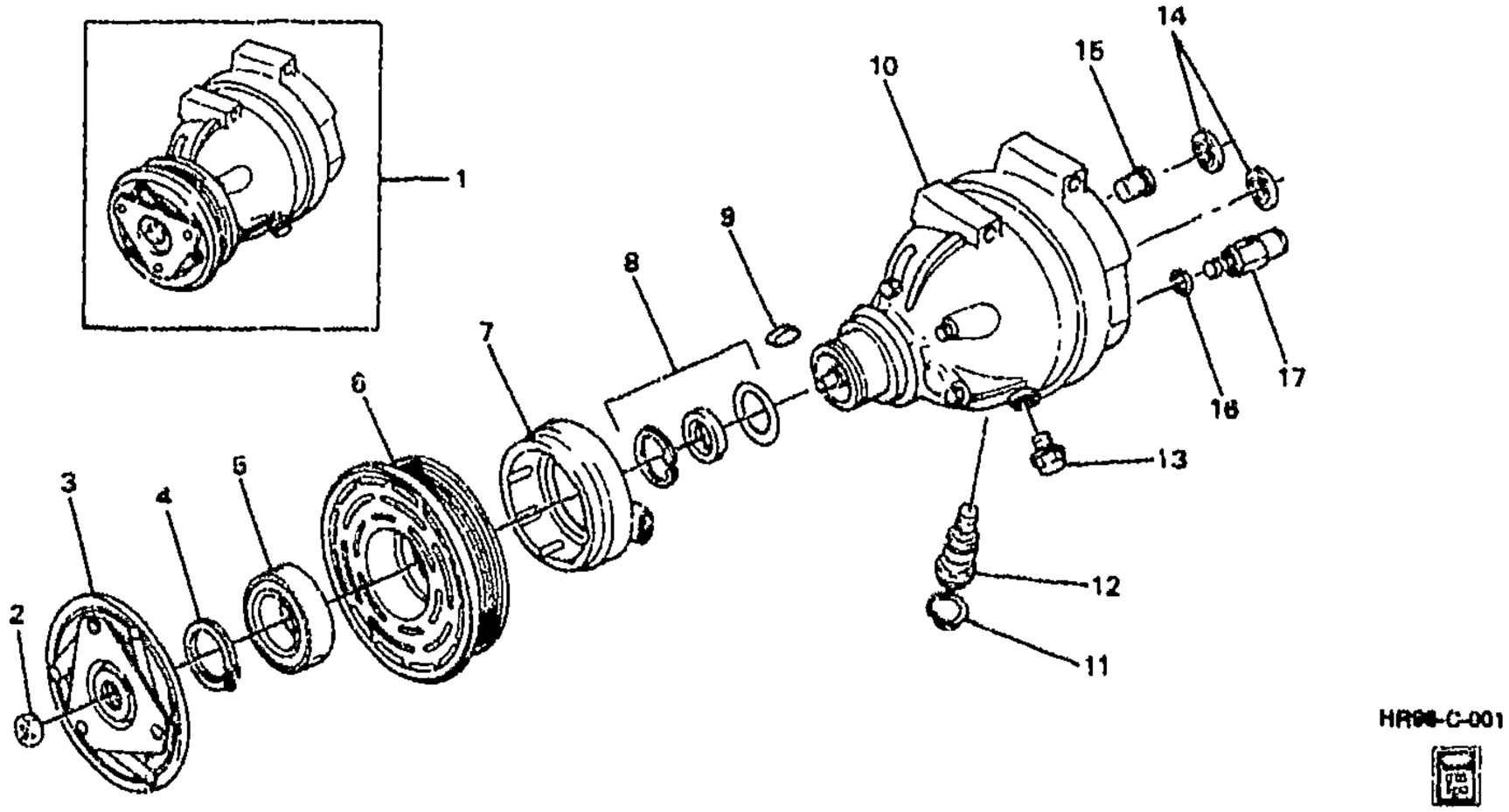

GM09-227F

1998-2002 F A/C COMPRESSOR ASM/V7(LS1/5.7G)

1.	8-D8	9.170	COMPRESSOR, A/C (INCLS 3, 10) (AC-DELCO #15-20730) ...	02	F (LS1, C60)	1	1137028
	8-D8	9.170	COMPRESSOR, A/C (V7 W/CLUTCH) (INCLS 3, 10) (AC-DELCO #15-20312)	98-02	F (LS1, C60)	1	1137014
		8.800	OIL, REFRIGERANT - 134A (SADEN) 250CC FOR USE ONLY ON SADEN A/C COMPRESSORS SD7H15 USING 134A REFRIGERANT (A/C CMPR)	98-02	.....	AR	12345923
2.	8-D12	9.181	NUT, A/C CLU (HEX LOCK, M9X1.25X6.14, SAE 1110, STL, ZP) (AC-DELCO #15-4263)	98-02	F (LS1, C60)	1	6557414
3.	8-D13	9.188	CLUTCH, A/C (CLUTCH DRIVER) (PART OF 1) (9.180) (AC-DELCO #15-4685)	98-02	F (LS1)	1	6581515
4.	8-D12	9.181	RING, A/C CMPR PUL BRG RET (AC-DELCO #15-2786)	98-02	F (LS1, C60)	1	6557617
5.	8-D12	9.181	BEARING, A/C CMPR PUL (PART OF 6) (9.188) (AC-DELCO #15-2802)	98-02	F (LS1, C60)	1	6559469
6.	8-D11	9.180	PULLEY, A/C CMPR (INCL 5) (AC-DELCO #15-4688)	98-02	F (LS1, C60)	1	6580808
7.	8-D12	9.186	COIL, A/C CLU (W/HSG) (MATES W/CONN 12101937) (AC-DELCO #15-4440)	98-02	F (LS1, C60)	1	6552423
8.	8-D9	9.175	SEAL KIT, A/C CMPR SHF (AC-DELCO #15-31018)	98-02	F (LS1, C60)	1	2724964
9.	8-D13	9.188	KEY, A/C CLU (AC-DELCO #15-4262)	98-02	F (LS1, C60)	1	6557411

cardiagn.com

	8–D8	9.170	**COMPRESSOR**, A/C (V7 W/CLUTCH) (PART OF 1) (AC–DELCO #15–20312)	98–02	F (LS1, C60)	1	1137014
		N.S.	**COMPRESSOR**, A/C (W/O CLU) (PART OF 1)		.....		
11.	8–D12	9.181	**RING**, A/C CMPR PUL BRG RET (PART OF 12) (AC–DELCO #15–2786)	98–02	F (LS1, C60)	1	6557617
12.	8–D10	9.176	**VALVE**, A/C CMPR VAR DISPL CONT (INCLS 11) (AC–DELCO #15–5452)	98–02	F (LS1, C60)	1	2724790
13.	8–D8	9.170	**PLUG**, A/C CMPR OIL DRN (AC–DELCO #15–31017)	98–02	F (LS1, C60)	1	6560692
14.	8–D16	9.222	**SEAL KIT**, A/C CMPR & CNDSR HOSE MANIF (CONTAINS 2 SEALS 5/8") (AC–DELCO #15–2722)	98–02	F (C60)	2	2724577
15.	8–D9	9.172	**SCREEN**, A/C CMPR SUC (AC–DELCO #15–2817)	98–02	F (LS1, C60)	1	6559238
16.	8–D16	9.222	**SEAL**, A/C CMPR PRESS RLF VLV (O RING) (PART OF 17) (W/5 VALVE SEALS) (AC–DELCO #15–30992)	98–02	F (LS1, C60)	1	2724953
17.	8–D11	9.178	**VALVE**, A/C CMPR PRESS RLF (INCLS 16) (W/O–RING) (W/ ENGLISH THREAD) (AC–DELCO #15–5415)	98	F (LS1, C60)	1	6552743
	8–D11	9.178	**VALVE**, A/C CMPR PRESS RLF (INCLS 16) (CONTAINS VALVE, O–RING, AND AN ADAPTER) (AC–DELCO #15–5711)	99–02	F (LS1, C60)	1	2724982

RPO DEFINITIONS
C60 – AIR CONDITIONER,FRONT,MANUAL CONTROLS
LS1 – ENGINE GAS, 8 CYL, 5.7L, SFI, ALUMINUM ENGINE

cardiagn.com

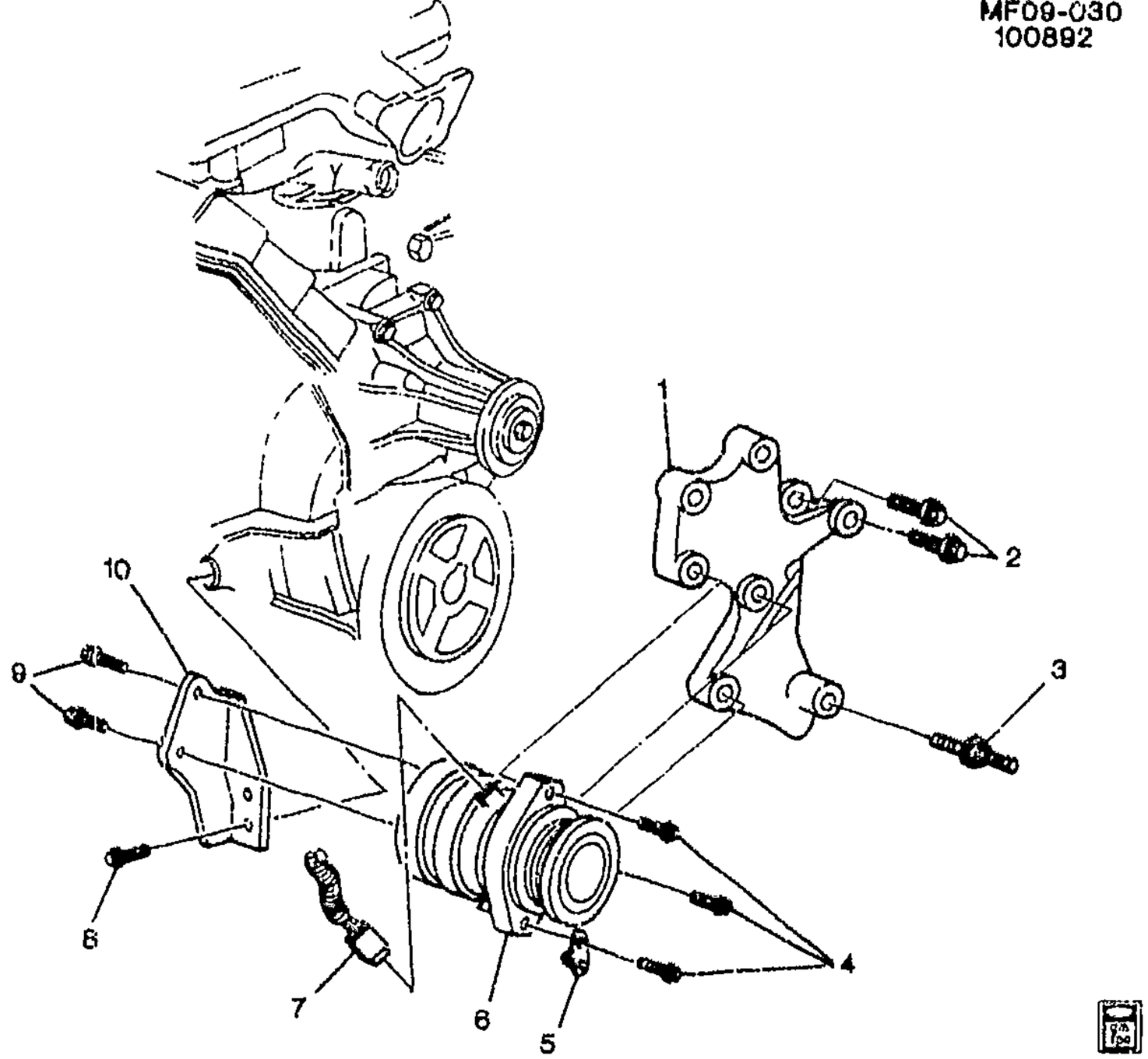

MF09-030

1993-1995 F A/C COMPRESSOR MOUNTING (L32/3.4S)

1.		DISCON	BRACKET, GEN & A/C CMPR ...	93-95	F (L32)	1	10115867
2.	8-D8	9.171	BOLT, GEN & A/C CMPR BRKT (2.277)	93-95	F (L32)	2	10166386
3.	8-D9	9.173	STUD, GEN & A/C CMPR BRKT (2.277)	93-95	F (L32)	1	10166378
4.		8.900	BOLT, HFH, M10X1.5X45, 25THD, 22.3OD, 10.9, 7114M, MACH RAISED SHOULDER (A/C CMPR BRKT)	93-95	.....	3	11515769
5.	8-D18	9.242	BRACKET, A/C CMPR & CNDSR HOSE CLIP	93-95	F (L32, C60)	1	10188089
6.	8-D8	9.170	COMPRESSOR, A/C (H6 W/CLUTCH, R134A) (AC-DELCO #15-20178)	93-95	F (L32, C60)	1	1136535
7.	8-D12	9.186	CONNECTOR, COIL-A/C CLU (OVAL) (2-WAY F) (W/LEADS) (2.535) (AC-DELCO #PT209) ...	93-95	F	AR	12101937
8.		8.900	BOLT, HFH M10X1.5X20 9.8 PZOR (A/C CMPR BR)	93-95	....	2	11508202
9.		8.900	BOLT, HFH, M8X1.25X20, 17THD, 18OD (A/C CMPR)	93-95	.....	2	11515758

cardiagn.com

							MF09-030
		8.800	ADHESIVE KIT, THREAD LOCK 10 ML. (A/C CMPR)	93-95	.....	AR	1052624
10.	8-D8	9.171	SUPPORT, A/C CMPR	93-95	F (L32, C60)	1	10115866

RPO DEFINITIONS
C60 -- AIR CONDITIONER,FRONT,MANUAL CONTROLS
L32 -- ENGINE,3.4L,V6,(3.4S),SFI,OHV

cardiagn.com

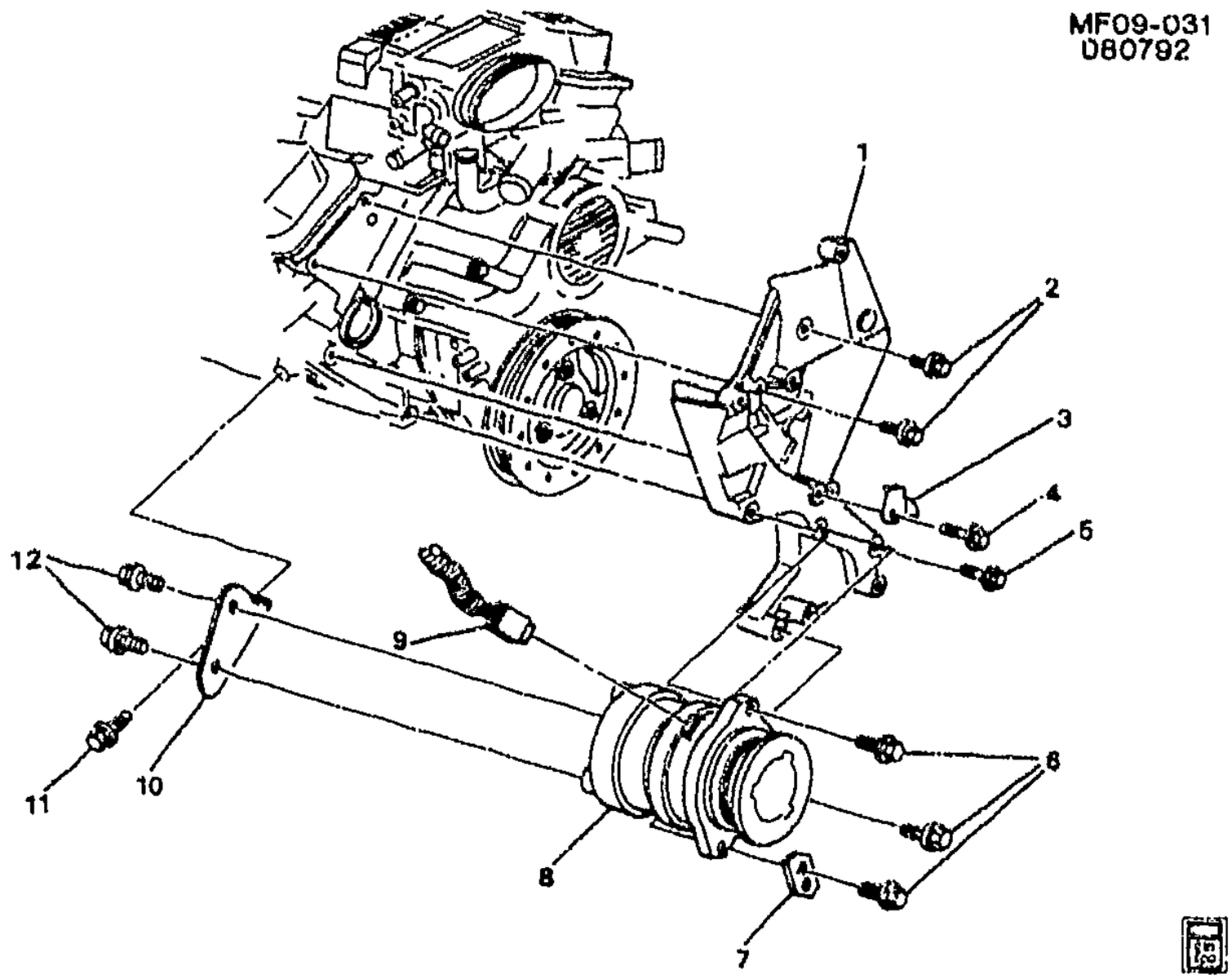

MF09-031

1993-1997 F A/C COMPRESSOR MOUNTING (LT1/5.7P)

1.	8-D8	9.171	**BRACKET**, GEN & A/C CMPR & P/S PUMP (2.277)	93-97	F (LT1)	1	10239875
2.		8.900	**BOLT**, HFH 3/8-16X1.12 280M ZP FULL THD .75-OD (GEN BRKT)	93-97		2	9440071
3.	8-M15	2.251	**SUPPORT**, SPLG WIRE	93-97	F (LT1)	1	10223670
4.	8-M16	2.277	**BOLT**, GEN BRKT	93-97	F (LT1)	1	10206119
5.	8-M16	2.277	**BOLT**, GEN BRKT (3.655)	93-97	F (LT1)	1	14084400
6.		8.900	**BOLT**, HFH, M10X1.5X45, 25THD, 22.3OD, 10.9, 7114M, MACH RAISED SHOULDER (A/C CMPR)	93-97		3	11515769
7.	8-D18	9.242	**BRACKET**, A/C CMPR & CNDSR HOSE CLIP	93-97	F (LT1, C60)	1	10188089
8.	8-D8	9.170	**COMPRESSOR**, A/C (H6 W/CLUTCH, R134A) (AC-DELCO #15-20046)	93	F (LT1, C60)	1	1136490
	8-D8	9.170	**COMPRESSOR**, A/C (H6 W/CLUTCH, R134A) (AC-DELCO #15-20178)	94-97	F (LT1, C60)	1	1136535
9.	8-D12	9.186	**CONNECTOR**, COIL-A/C CLU (OVAL) (2-WAY F) (W/LEADS) (2.535) (AC-DELCO #PT209)	93-97	F	AR	12101937
10.	8-D8	9.171	**BRACKET**, A/C CMPR RR (ONLY "1" COMPRESSOR MOUNT HOLE)	93-97	F (LT1, C60)	1	10223765

cardiagn.com

					MF09-031
11.	8.900	BOLT, HFH 3/8-16X1.12 280M ZP FULL THD .75-OD (A/C CMPR RR BRKT)	93-97	.....	1 9440071
12.	8.900	BOLT, HFH, M8X1.25X20, 17THD, 18OD (A/C CMPR RR BRKT)	93-97	.....	2 11515756

RPO DEFINITIONS
C60 - AIR CONDITIONER,FRONT,MANUAL CONTROLS
LT1 - ENGINE-GAS, 8 CYL, 5.7L(5.7P),MFI,HO

cardiagn.com

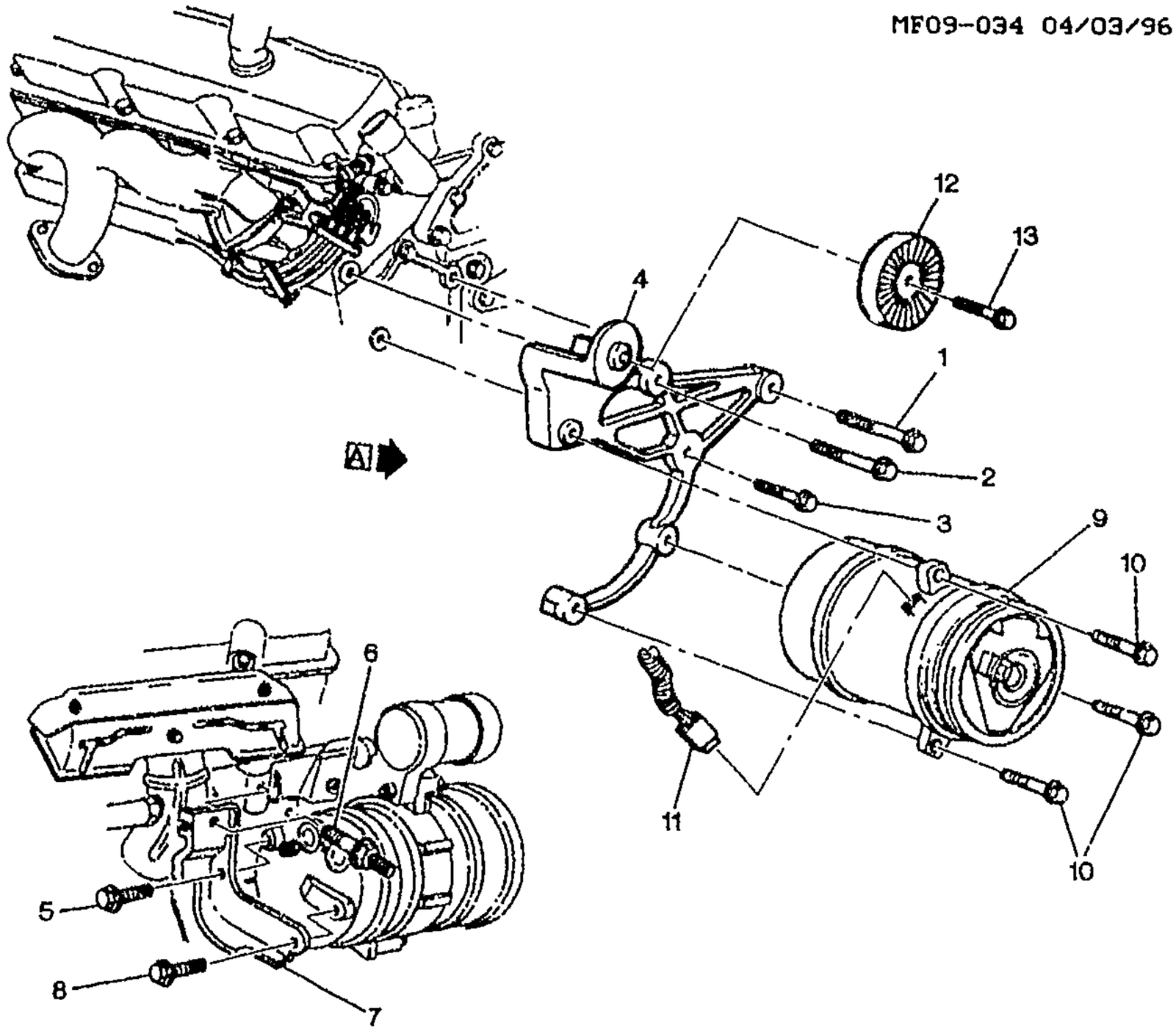

VIEW A

MF09-034

1995-1998 F A/C COMPRESSOR MOUNTING (L36/3.8K)(C60)

1.		8.900	**BOLT**, HFH, M10X1.5X45, 25THD, 22.3OD, 10.9, 7114M, MACH RAISED SHOULDER (A/C CMPR FRT BRKT)	95-98	F	1	11515768
2.		8.900	**BOLT**, HFH, M10X1.5X65, 22.3 OD, 7114M, RED BODY, 10.9, (A/C CMPR FRT BRKT)	95-98	F	1	11516109
3.		8.900	**BOLT-HFH**, M8X1.25X40, 22 THD, 18 OD, 10.9, 7112M, MACH (A/C CMPR FRT BRKT)	95-98	F	1	11515792
4.	8-D8	9.171	**BRACKET**, A/C CMPR FRT (INCLS 12, 13)	95-98	F (L36)	1	24506755
5.		8.900	**BOLT; M8X1.25X40**, 18 OD, 22 THD, 9.8 (INNER)	95-98	.....	AR	11516339
6.	8-D9	9.173	**STUD**, A/C CMPR BRKT (TO BLOCK-HOLDS NEG BAT CABLE GRD) (10X1.5X32 & 8.25X16) (9.171)	95-98	F (L36, C60)	1	10066622

cardiagn.com

							MF09-034
9.	8-D8	9.170	**COMPRESSOR**, A/C (V5 W/CLUTCH) (AC-DELCO #15-20342)	95-98	F (L36, C60)	1	1135278
10.		8.900	**BOLT**, HFH M10X1.5X50 10.9 POR (A/C CMPR)	95-98	F	2	11508355
11.		8.965	**CONNECTOR** (A/C CLU WRG) (2.535) (AC-DELCO #PT175) ...	95-98	F	1	12101903
12.	8-D11	9.180	**PULLEY**, A/C CMPR (PART OF 4) (PART OF ACCESSORY TENSIONER ASSEMBLY) (AC-DELCO #15-4683)	98	F (L36)	1	24506756
	8-D11	9.180	**PULLEY**, A/C CMPR (PULLEY TO COMPRESSOR) (PART OF 4) (AC-DELCO #15-4609)	95-98	F (L36, C60)	1	6580046
13.	8-D12	9.181	**BOLT**, A/C CMPR BELT IDLER PUL (PART OF 4) (1.060)	95-98	F (L36, C60)	1	24503929

RPO DEFINITIONS
C60 – AIR CONDITIONER,FRONT,MANUAL CONTROLS
L36 – ENGINE GAS, 6 CYL, 3.8K, MFI, V6, HO (ERV6 SERIES)

cardiagn.com

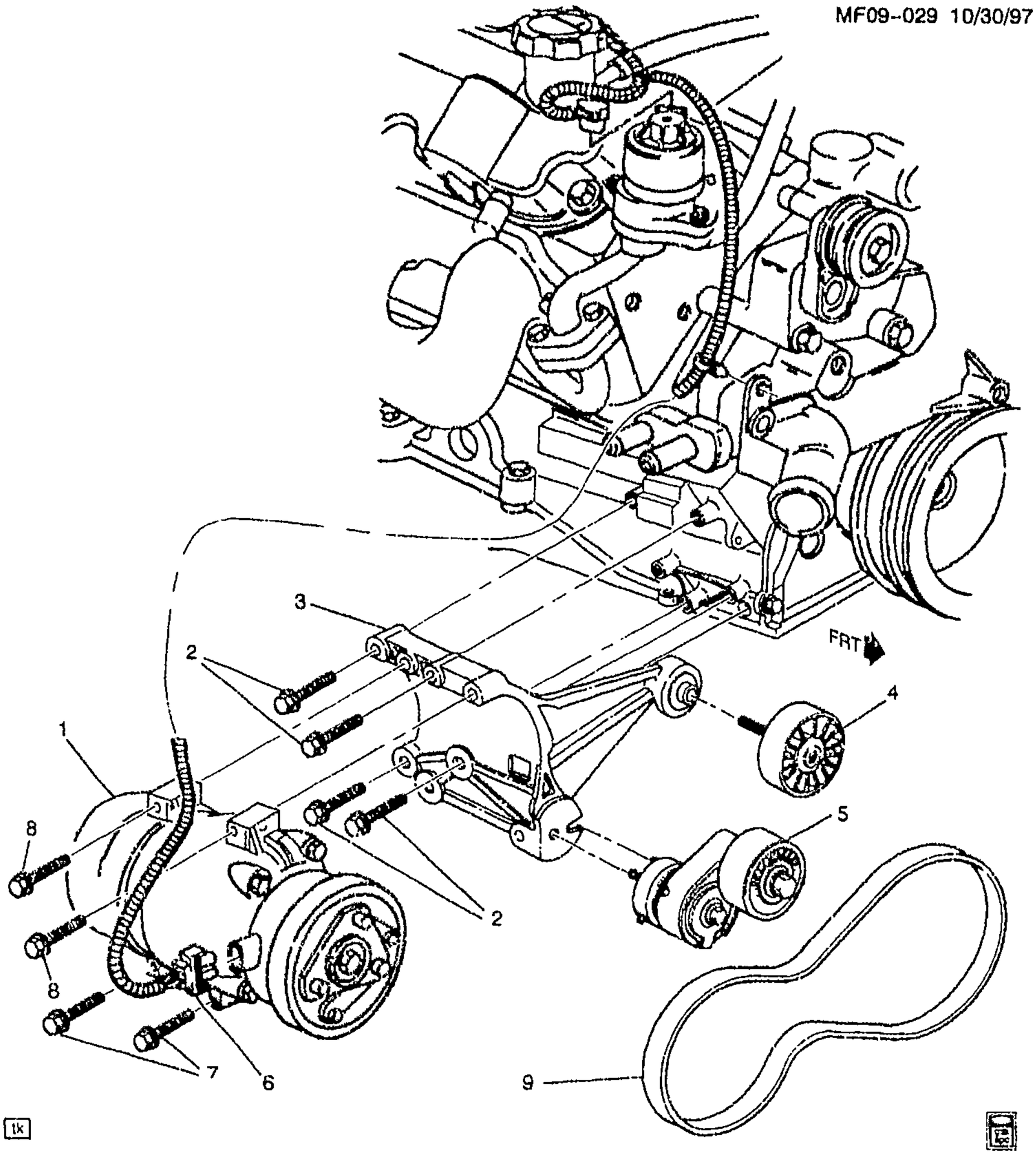

MF09-029

1998-2002 F A/C COMPRESSOR MOUNTING (LS1/5.7G)

1.	8-D8	9.170	COMPRESSOR, A/C (AC-DELCO #15-20730)	02 F (LS1, C60)	1	1137028
	8-D8	9.170	COMPRESSOR, A/C (V7 W/CLUTCH) (AC-DELCO #15-20312)	98-02 F (LS1, C60)	1	1137014

cardiagn.com

2.		8.900	**BOLT**, HFH, M10X1.5X55, 30THD, 22.3 OD, 10.9, 7114, REDUCED BODY (A/C CMPR BRKT)	98-02	F	AR	11515771
3.	8-D8	9.171	**BRACKET**, A/C CMPR	98	F (LS1)	1	12556677
	8-D8	9.171	**BRACKET**, A/C CMPR	99-02	F (LS1)	1	12556677
4.	8-D11	9.180	**PULLEY**, A/C CMPR BELT IDLER (AC-DELCO #15-4670)	98-02	F (LS1)	1	12557335
5.	8-D11	9.180	**TENSIONER**, A/C CMPR BELT ..	98-02	F (LS1)	1	12560345
6.	8-D12	9.186	**CONNECTOR**, COIL-A/C CLU (OVAL) (2-WAY F) (W/LEADS) (2.535) (AC-DELCO #PT209) ...	98	F	AR	12101937
	8-D12	9.186	**CONNECTOR**, COIL-A/C CLU (OVAL) (2-WAY F) (W/LEADS) (2.535) (AC-DELCO #PT209) ...	98-02	F (LS1)	1	12101937
7.		8.900	**BOLT/SCREW**, M10X1.5X110 (4.3"), 15MM SOCKET/P-PT, GM7114M, PZOR (A/C CMPR) ...	98-02	F	AR	11516714
8.		8.900	**BOLT**, HFH, M10X1.5X55, 30THD, 22.3 OD, 10.9, 7114, REDUCED BODY (A/C CMPR)	98-02	F	AR	11515771
9.	8-M14	1.066	**BELT**, A/C CMPR (AC-DELCO #12559357)	98-02	F (LS1)	1	12559327

RPO DEFINITIONS
C60 – AIR CONDITIONER,FRONT,MANUAL CONTROLS
LS1 – ENGINE GAS, 8 CYL, 5.7L, SFI, ALUMINUM ENGINE

cardiagn.com

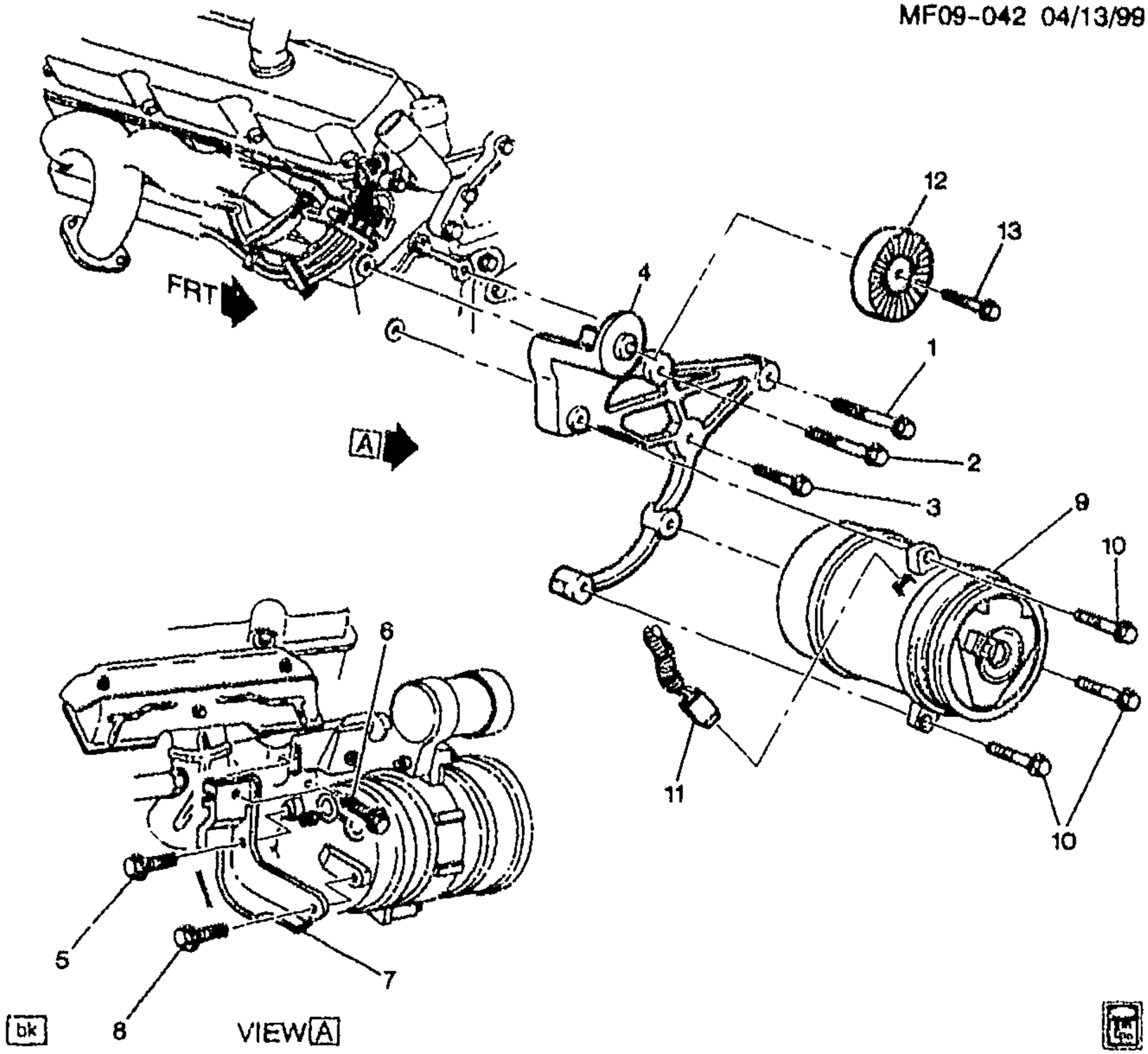

MF09-042

1999-2002 F A/C COMPRESSOR MOUNTING (L36/3.8K)(C60)

1.		8.900	BOLT, HFH, M10X1.5X45, 25THD, 22.3OD, 10.9, 7114M, MACH RAISED SHOULDER (A/C CMPR FRT BRKT)	99-02	F	1	11515769
2.		8.900	BOLT, HFH, M10X1.5X65, 22.3 OD, 7114M, RED BODY, 10.9, (A/C CMPR FRT BRKT)	99-02	F	1	11516109
3.		8.900	BOLT-HFH, M8X1.25X40, 22 THD, 18 OD, 10.9, 7112M, MACH (A/C CMPR FRT BRKT)	99-02	F	1	11515792
4.	8-D8	9.171	BRACKET, A/C CMPR FRT (INCLS 12, 13)	99-02	F (L36)	1	24506755
5.		8.900	BOLT; M8X1.25X40, 18 OD, 22 THD, 9.8 (INNER)	99-02		AR	11516339
6.		8.900	BOLT, M10X1.5X30, 10.9, 7114M. 22 OD, HDR PT (A/C CMPR BRKT)	99-02		AR	11516328

cardiagn.com

9.	8-D8	9.170	**COMPRESSOR**, A/C (AC-DELCO #15-20454)	02	F (L36, C60)	1	1135436
	8-D8	9.170	**COMPRESSOR**, A/C (V5 W/CLUTCH) (AC-DELCO #15-20342)	99-02	F (L36, C60)	1	1135278
10.		8.900	**BOLT**, HFH M10X1.5X50 10.9 POR (A/C CMPR)	99-02	F	2	11508355
11.		8.965	**CONNECTOR** (A/C CLU WRG) (2.535) (AC-DELCO #PT175) ...	99-02	F	1	12101903
12.	8-D11	9.180	**PULLEY**, A/C CMPR (PART OF 4) (PART OF ACCESSORY TENSIONER ASSEMBLY) (AC-DELCO #15-4683)	99-02	F (L36)	1	24506756
	8-D11	9.180	**PULLEY**, A/C CMPR (PULLEY TO COMPRESSOR) (PART OF 4) (AC-DELCO #15-4609)	99-02	F (L36, C60)	1	6580046
13.	8-D12	9.181	**BOLT**, A/C CMPR BELT IDLER PUL (PART OF 4) (1.060)	99-02	F (L36, C60)	1	24503929

RPO DEFINITIONS
C60 – AIR CONDITIONER,FRONT,MANUAL CONTROLS
L36 – ENGINE GAS, 6 CYL, 3.8K, MFI, V6, HO (ERV6 SERIES)

cardiagn.com

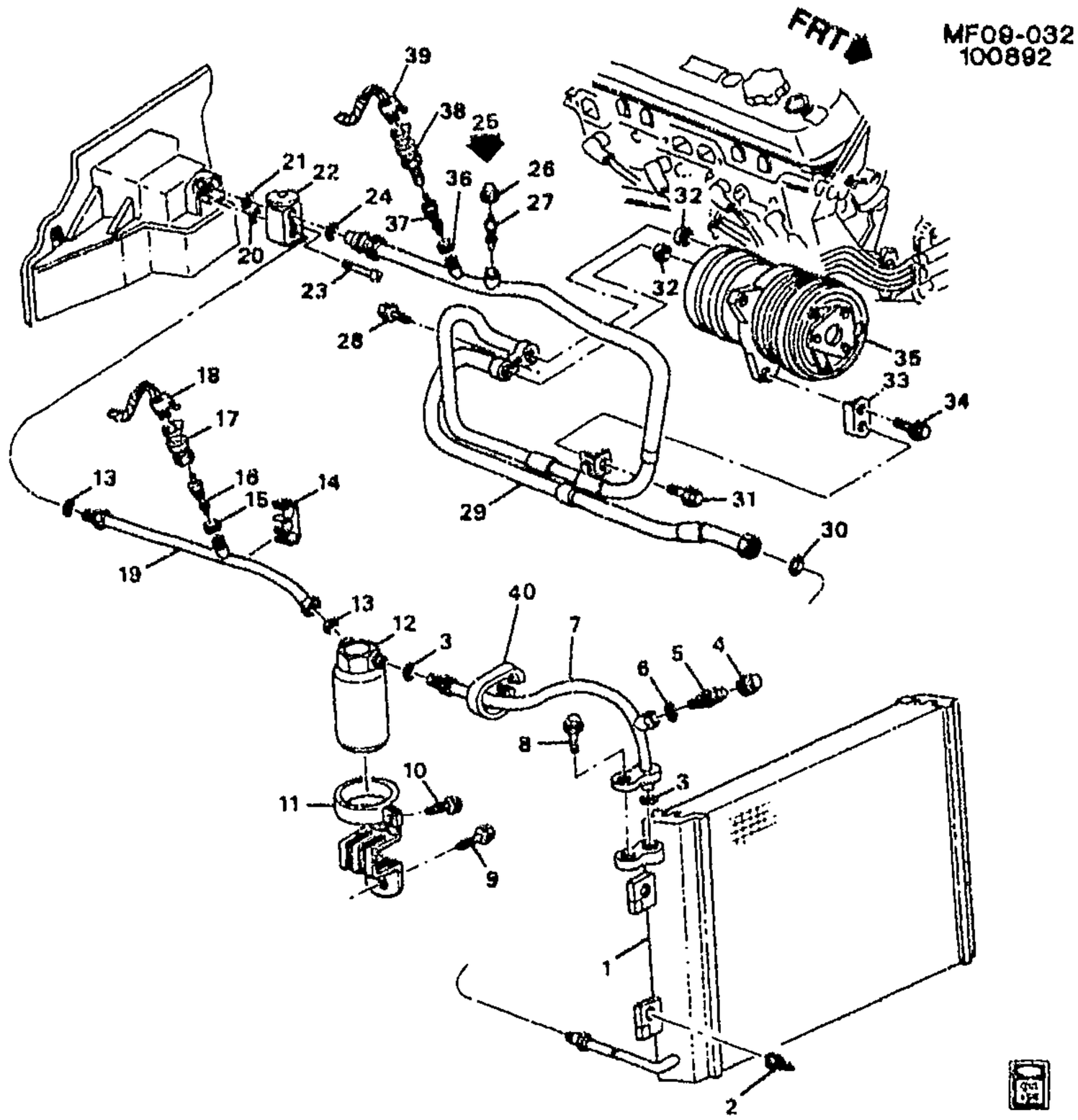

MF09-032

1993–1994 F A/C REFRIGERATION SYSTEM (C60)
1995 F A/C REFRIGERATION SYSTEM (L32 & LT1/3.4S & 5.7P)(C60)
1996–1997 F A/C REFRIGERATION SYSTEM (LT1/ 5.7P)(C60)

1.	8–D13	9.190	**CONDENSER**, A/C (INCLS 2) (AC–DELCO #15–6705)	96–97 F (C60)	1	52460894
	8–D13	9.190	**CONDENSER**, A/C (INCLS 2) (AC–DELCO #15–6705)	93–95 F (C60)	1	52460894
2.	8–M15	1.276	**RETAINER**, RAD AIR UPR BFL (PART OF 1) (CHRISTMAS TREE TYPE) (14.731)	93–97 F (C60)	2	20387349
3.		8.927	**O–RING**, 1/2 TUBE O .D., INSIDE DIA .364 (A), .094 (B), .005 (C), .003 (D) (A/C RCVR & DEHYDR TUBE O RING) (PART OF 7) (AC–DELCO #15–3984)	93–97	2	52454645
4.	8–D10	9.177	**CAP**, A/C REFRIG CHRG VLV	93–97 F	1	10245620

cardiagn.com

5.	8-D10	9.177	**VALVE**, A/C REFRIG SERV (PART OF 7) (INCLS FITTING & SEAL) (AC-DELCO #15-5438)	93-94	F (C60)		52458184
	8-D11	9.178	**VALVE**, A/C REFRIG HIGH PRESS SERV (PART OF 7) (AC-DELCO #15-5528)	95-97	F		10245619
	8-D10	9.177	**CORE**, A/C REFRIG SERV VLV (PART OF 7) (9.178) (AC-DELCO #15-5528)	95	F	1	10245619
6.	8-D16	9.222	**SEAL**, A/C REFRIG SERV VLV (O RING) (PART OF 7) (BLACK) (RUBBER) (AC-DELCO #15-30572)	93-94	F (C60)	1	52458183
	8-D16	9.222	**SEAL**, A/C REFRIG SERV VLV (O RING) (PART OF 7) (BLACK) (RUBBER) (AC-DELCO #15-30572) (PRIOR TO VIN 220028, NO COMP 2ND DES) ...	95	F (LT1, L32, C60) (1ST DES)	1	52458183
		N.S.	**SEAL**, A/C REFRIG SERV VLV (O RING) (PART OF 7)	96-97	.....		
7.	8-D15	9.220	**TUBE**, A/C RCVR & DEHYDR (INCLS 3-6)	93-95	F (C60)	1	10269581
	8-D15	9.220	**TUBE**, A/C RCVR & DEHYDR (INCLS 3-6)	96-97	F (LT1, C60)	1	10269581
8.		8.900	**BOLT**, HWH, M8X1.25X40, SPL FULLTHD, AC PT, 10.9 PZOR (A/C RCVR & DEHYDR TUBE)	93-97	.....	1	11515758
9.		8.900	**BOLT**, HFH M8X1.25X18 (A/C RCVR & DEHYDR BRKT)	93-97	.....	1	11513703
10.		8.977	**SCREW**, HEX W/FLAT WA (A/C RCVR & DEHYDR CLA)	93-97	.....	1	
11.	8-D14	9.196	**BRACKET**, A/C RCVR & DEHYDR	93-94	F (C60)	1	10170200
	8-D14	9.196	**BRACKET**, A/C RCVR & DEHYDR	95	F (LT1, L32, C60)	1	10170200
	8-D14	9.196	**BRACKET**, A/C RCVR & DEHYDR	96-97	F (LT1, C60)	1	10170200
12.	8-D13	9.195	**RECEIVER & DEHYDRATOR**, A/C (AC-DELCO #15-1598) ...	93-94	F (C60)	1	2724698
	8-D13	9.195	**RECEIVER & DEHYDRATOR**, A/C (AC-DELCO #15-1701) ...	95	F (LT1, L32, C60)	1	2724910
	8-D13	9.195	**RECEIVER & DEHYDRATOR**, A/C (AC-DELCO #15-1598) ...	96-97	F (LT1)	1	2724698
13.		8.927	**O-RING**, 1/2 TUBE O .D., INSIDE DIA .364 (A), .094 (B), .005 (C), .003 (D) (A/C EVAP TUBE O RING) (PART OF 19) (AC-DELCO #15-3984)	93-97	.....	2	52454645
14.	8-D18	9.242	**CLIP**, A/C EVPR TUBE (PART OF 19)	93-95	F (C60)	1	10236569
	8-D18	9.242	**CLIP**, A/C EVPR TUBE (PART OF 19)	96-97	F (LT1, C60)	1	10236569
15.		8.927	**O-RING**, ID .301X.070 THK, MATERIAL-NEOPRENE. (A/C REFRIG PRESS SW FTG O RING) (PART OF 19) (AC-DELCO #15-3592)	93-97	.....	1	3093509
16.	8-D10	9.177	**CORE**, A/C REFRIG SERV VLV (PART OF 19) (W/O O-RING) (AC-DELCO #15-1119)	93-97	F (C60)	1	3041827

cardiagn.com

17.	8–D20	9.275	**SENSOR**, A/C REFRIG PRESS (AC–DELCO #15–5724)	93–94	F (C60)	1	22624066
	8–D20	9.275	**SENSOR**, A/C REFRIG PRESS (AC–DELCO #15–5724)	95–97	F (C60)	1	22624066
18.	8–D8	9.170	**CONNECTOR**, SEN–A/C REFRIG PRESS (BLACK) (3–WAY F) (W/LEADS) (2.535) (AC–DELCO #PT375)	93–97	F	1	12102748
19.	8–D15	9.220	**TUBE**, A/C EVPR (INCLS 13–16)	93–97	F (LT1, C60)	1	10245329
	8–D15	9.220	**TUBE**, A/C EVPR (INCLS 13–16)	93–95	F (L32, C60)	1	10245329
20.		9.927	**O–RING**, 1/2 TUBE O .D., INSIDE DIA .364 (A), .094 (B), .005 (C), .003 (D) (PART OF EVAPORATOR. SEE "A/C & HEATER MODULE ASM." ILLUSTRATION IN GRP. 9.000 FOR DETAILED VIEW.) (AC–DELCO #15–3984)	93–97	F	1	52454645
21.	8–D16	9.222	**SEAL**, A/C CMPR & CNDSR HOSE (O RING) (PART OF EVAPORATOR. SEE "A/C & HEATER MODULE ASM" ILLUSTRATION IN GRP. 9.000 FOR DETAILED VIEW.) (BLACK) (AC–DELCO #15–30170)	93–97	F	1	52458698
22.	8–D15	9.213	**VALVE**, AUX A/C EVPR THERM EXPN (SEE "A/C & HEATER MODULE ASM." ILLUSTRATION IN GRP. 9.000 FOR DETAILED VIEW.) (9.222) (AC–DELCO #15–5461)	93–94	F (C60)	1	52477944
	8–D15	9.213	**VALVE**, AUX A/C EVPR THERM EXPN (SEE "A/C & HEATER MODULE ASM." ILLUSTRATION IN GRP. 9.000 FOR DETAILED VIEW.) (9.222) (AC–DELCO #15–5461)	95–97	F (LT1, C60)	1	52477944
	8–D15	9.213	**VALVE**, AUX A/C EVPR THERM EXPN (SEE "A/C & HEATER MODULE ASM." ILLUSTRATION IN GRP. 9.000 FOR DETAILED VIEW.) (9.222) (AC–DELCO #15–5461)	95	F (L32, C60)	1	52477944
23.	8–D18	9.242	**BOLT**, A/C EVPR TXV TUBE CLIP (NOT USED AFTER 1995)	93–94	F (C60)	2	11515688
	8–D18	9.242	**BOLT**, A/C EVPR TXV TUBE CLIP (NOT USED AFTER 1995)	95	F (LT1, C60)	2	11515688
	8–D18	9.242	**BOLT**, A/C EVPR TXV TUBE CLIP (NOT USED AFTER 1995)	95	F (L32, C60)	2	11515688
24.	8–D16	9.222	**SEAL**, A/C CMPR & CNDSR HOSE (O RING) (PART OF 29) (BLACK) (AC–DELCO #15–30170) (5/8"O.D.)	93–95	F (C60)	1	52458698
	8–D16	9.222	**SEAL**, A/C CMPR & CNDSR HOSE (O RING) (PART OF 29) (BLACK) (AC–DELCO #15–30170)	96–97	F (LT1, C60)	1	52458698

cardiagn.com

25.		8.800	**REFRIGERANT-A/C R134A** (AC DELCO) (AC-DELCO #15-119)	93-97	F	AR	12356150
		8.800	**OIL**, REFRIGERANT - 134A (SADEN) 250CC FOR USE ONLY ON SADEN A/C COMPRESSORS SD7H15 USING 134A REFRIGERANT	93-97	F	AR	12345923
26.	8-D10	9.177	**CAP**, A/C REFRIG CHRG VLV (PART OF 29) (8MM X 1.0) (LOW SIDE SERVICE PORT) (9.220)	93-97	F	1	52471377
27.	8-D10	9.177	**CORE**, A/C REFRIG SERV VLV (PART OF 29) (W/O O-RING) (AC-DELCO #15-1119)	93-97	F (C60)	1	3041827
28.		8.900	**BOLT**, M10X1.5X32, 28.10 THD, 20.28 OD, 10.9, GM 7114M (A/C CMPR & CNDSR HOSE) (AC-DELCO #179-2006)	93-97		1	15726400
29.	8-D17	9.226	**HOSE ASM**, A/C CMPR & CNDSR (INCLS 24, 26, 27, 30, 32, 36, 37) (AC-DELCO #15-30298)	93	F (LT1, C60)	1	10241616
	8-D17	9.226	**HOSE ASM**, A/C CMPR & CNDSR (INCLS 24, 26, 27, 30, 32, 36, 37) (AC-DELCO #15-30312)	93	F (L32, C60)	1	10245328
	8-D17	9.226	**HOSE ASM**, A/C CMPR & CNDSR (INCLS 24, 26, 27, 30, 32, 36, 37) (AC-DELCO #15-30462)	94-95	F (L32, C60)	1	10260406
	8-D17	9.226	**HOSE ASM**, A/C CMPR & CNDSR (INCLS 24, 26, 27, 30, 32, 36, 37) (AC-DELCO #15-30481)	94-97	F (LT1, C60)	1	10269542
30.		8.927	**O-RING**, 1/2 TUBE O .D., INSIDE DIA .364 (A), .094 (B), .005 (C), .003 (D) (A/C CNDSR FTG O RING) (PART OF 29) (AC-DELCO #15-3984)	93-97		1	52454645
31.		8.900	**BOLT**, M6X1X16, 13.5 THD, 14.2 OD, 9.8, SN-ZN (A/C CMPR & CNDSR HOSE CLIP BRKT) (PART OF 29)	93-97		1	11517517
32.	8-D16	9.222	**SEAL KIT**, A/C CMPR & CNDSR HOSE MANIF (PART OF 29) (CONTAINS 2 SEALS 5/8") (AC-DELCO #15-2722)	93-97	F (C60)	2	2724577
33.	8-D18	9.242	**BRACKET**, A/C CMPR & CNDSR HOSE CLIP	93-97	F (LT1, C60)	1	10188089
	8-D18	9.242	**BRACKET**, A/C CMPR & CNDSR HOSE CLIP	93-95	F (L32, C60)	1	10183089
34.		8.900	**BOLT**, HFH, M10X1.5X45, 25THD, 22.3OD, 10.9, 7114M, MACH RAISED SHOULDER (A/C CMPR BRKT)	93-97		3	11515769
35.	8-D8	9.170	**COMPRESSOR**, A/C (H6 W/CLUTCH, R134A) (AC-DELCO #15-20046)	93	F (LT1, C60)	1	1136490

cardiagn.com

	8–D8	9.170	**COMPRESSOR**, A/C (H6 W/CLUTCH, R134A) (AC–DELCO #15–20178)	93–95	F (L32, C60)	1	1136535
	8–D8	9.170	**COMPRESSOR**, A/C (H6 W/CLUTCH, R134A) (AC–DELCO #15–20178)	94–97	F (LT1, C60)	1	1136535
36.		N.S.	**SEAL**, A/C CMPR CYC SW (O RING) (PART OF 29)		.....		
37.		N.S.	**VALVE**, A/C CMPR REFRIG PRESS SW (PART OF 29)		.....		
38.	8–D9	9.172	**SWITCH**, A/C CMPR LOW PRESS CUTOFF (AC–DELCO #15–2915)	93–97	F (C60)	1	10242579
39.	8–D9	9.172	**CONNECTOR**, SW–A/C CMPR LOW PRESS CUTOFF (BLACK) (2–WAY F) (W/LEADS) (2.535) (AC–DELCO #PT124)	93	F (C60)	1	12085503
		N.S.	**CONNECTOR**, SW–A/C CMPR LOW PRESS CUTOFF	94–97	.....		
40.	8–D18	9.242	**STRAP**, A/C CMPR & CNDSR HOSE	96–97	F (LT1, C60)	1	10232605
	8–D18	9.242	**STRAP**, A/C CMPR & CNDSR HOSE	93–95	F (LT1, C60)	1	10232605

RPO DEFINITIONS
C60 – AIR CONDITIONER,FRONT,MANUAL CONTROLS
LT1 – ENGINE–GAS, 8 CYL, 5.7L(5.7P),MFI,HO
L32 – ENGINE,3.4L,V6,(3.4S),SFI,OHV

cardiagn.com

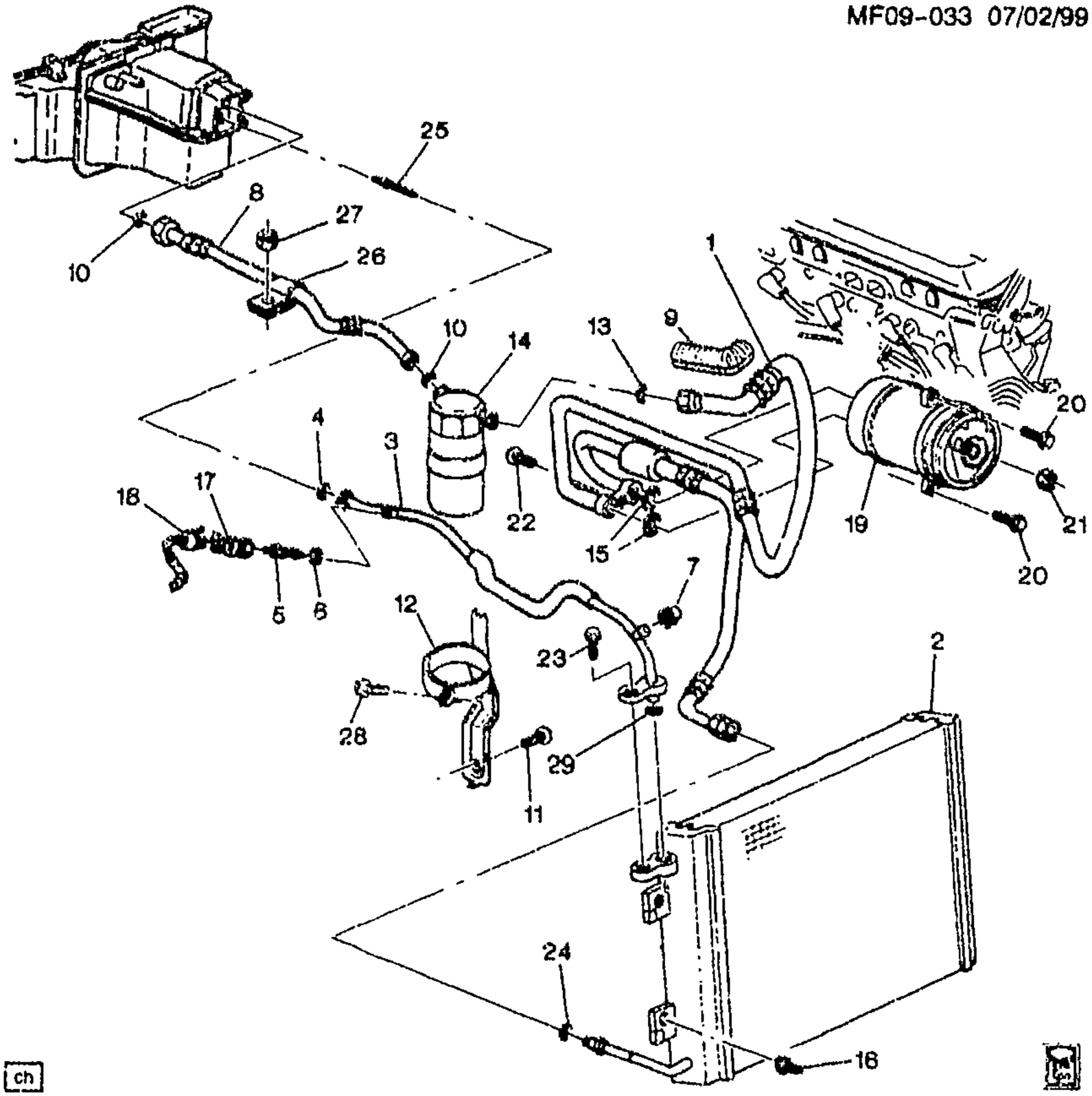

ch

MF09-033

1995-1997 F A/C REFRIGERATION SYSTEM (L36/3.8K)(C60)

1.	8-D17	9.226	**HOSE ASM**, A/C CMPR & CNDSR (INCLS 13, 15, 24) (AC-DELCO #15-30514)	95-97	F (L36, C60)	1 10274524
2.	8-D13	9.190	**CONDENSER**, A/C (INCL 16) (AC-DELCO #15-6705)	95-97	F (C60)	1 52460894
3.	8-D15	9.220	**TUBE**, A/C EVPR (INCLS 4-7, 25, 29)	95-97	F (L36, C60)	1 10276554
4.		8.027	**O-RING**, 1/2 TUBE O .D., INSIDE DIA .364 (A), .094 (B), .005 (C), .003 (D) (PART OF 3) (AC-DELCO #15-3984)	95-97	.....	1 52454645
5.	8-D10	9.177	**CORE**, A/C REFRIG SERV VLV (PART OF 3) (W/O O-RING) (AC-DELCO #15-1119)	95-97	F	1 3041827
6.		8.927	**O-RING**, ID .301X.070 THK, MATERIAL-NEOPRENE. (PART OF 3) (AC-DELCO #15-3592) ..	95-97	F	1 3093509

cardiagn.com

7.	8–D10	9.177	**CAP**, A/C REFRIG CHRG VLV (PART OF 3) (AC–DELCO #15–30477) (W/VIN 220028 & GREATER)	95	F (2ND DES)	1	10245620
	8–D10	9.177	**CAP**, A/C REFRIG CHRG VLV (PART OF 3) (AC–DELCO #15–30477)	96–97	F (L36, C60)	1	10245620
8.	8–D17	9.225	**HOSE**, A/C ACCUM (INCLS 10, 26) (AC–DELCO #15–30515) ...	95–96	F (L36, C60)	1	10274539
		N.S.	**HOSE**, A/C ACCUM (HOSE PART OF 14)	97	.....		
9.		N.S.	**SLEEVE**, A/C CMPR & CNDSR HOSE (NOT REQ FOR SERVICE)		.....		
10.		8.927	**O–RING**, 3/4 TUBE O .D., INSIDE DIA .549 (A), .103 (B), .005 (C), .003 (C) (PART OF 8, 10, 14) (AC–DELCO #15–3985) . ..	95–97	F	2	52454646
11.	8–D14	9.196	**BOLT**, A/C ACCUM BRKT (M8X1.25X15 POR) (3.023)	95–97	F (L36, C60)	AR	14060161
12.	8–D14	9.196	**BRACKET**, A/C ACCUM (INCLS 28)	95–97	F (L36, C60)	1	10239868
13.		8.927	**O–RING**, 3/4 TUBE O .D., INSIDE DIA .549 (A), .103 (B), .005 (C), .003 (C) (PART OF 1) (AC–DELCO #15–3985)	95–97	F	1	52454646
14.	8–D13	9.195	**ACCUMULATOR**, A/C (INCLS 8, 10, 26) (AC–DELCO #15–1687)	95–96	F (L36, C60)	1	2724907
	8–D13	9.195	**ACCUMULATOR**, A/C (INCLS 8, 10, 26) (AC–DELCO #15–1777)	97	F (L36, C60)	1	2724937
15.	8–D16	9.222	**SEAL KIT**, A/C CMPR & CNDSR HOSE MANIF (PART OF 1) (CONTAINS 2 SEALS 5/8") (AC–DELCO #15–2722)	95–97	F (C60)	2	2724577
16.	8–M15	1.276	**RETAINER**, RAD AIR UPR BFL (PART OF 2) (CHRISTMAS TREE TYPE) (14.731)	95–97	F (C60)	2	20387349
17.	8–D20	9.275	**SENSOR**, A/C REFRIG PRESS (AC–DELCO #15–5724)	95–97	F (C60)	1	22624066
18.	8–D8	9.170	**CONNECTOR**, SEN–A/C REFRIG PRESS (BLACK) (3–WAY F) (W/LEADS) (2.535) (AC–DELCO #PT375)	95–97	F	1	12102748
19.	8–D8	9.170	**COMPRESSOR**, A/C (V5 W/CLUTCH) (AC–DELCO #15–20342)	95–97	F (L36, C60)	1	1135278
20.		8.900	**BOLT**, HFH M10X1.5X50 10.9 POR (A/C CMPR)	95–97	F	2	11508355
21.		8.915	**NUT**, HFH, 10X1.5 THD, 9.8 THK, 21.8 OD, 510M (10) ZF 7111M (A/C CMPR) (1.062)	95–97	F	1	11514597
22.		8.900	**BOLT**, M10X1.5X32, 28.10 THD, 20.28 OD, 10.9, GM 7114M (A/C CMPR & CNDSR HOSE) (AC–DELCO #178–2006)	95–97	F	1	15726460
23.		8.900	**BOLT**, HWH, M8X1.25X40, SPL FULLTHD, AC PT, 10 9 PZOR (A/C EVPR TUBE)	95–97	F	1	11515758

cardiagn.com

24.		8.927	**O-RING**, 1/2 TUBE O .D., INSIDE DIA .364 (A), .094 (B), .005 (C), .003 (D) (PART OF 1) (AC-DELCO #15-3984)	95-97	F	1	52454645
25.	8-D15	9.213	**ORIFICE**, A/C EVPR TUBE (PART OF 3) (AC-DELCO #15-5378) ..	95-97	F (L36, C60)	1	3096068
26.	8-D18	9.242	**CLIP**, A/C ACCUM HOSE (PART OF 8, 14) (NOT USED AFTER 1997)	95-97	F (L36, C60)	1	10276101
27.		8.915	**NUT**, HEX M10X1.5 6.3 THK STL PL (A/C ACCUM & EVPR TUBE BRKT)	95-97	F	1	11508189
28.		8.977	**SCREW**, HEX W/FLAT WA (PART OF 12)	95-97	F	1	12337828
29.		8.927	**O-RING**, 1/2 TUBE O .D., INSIDE DIA .364 (A), .094 (B), .005 (C), .003 (D) (PART OF 3) (AC-DELCO #15-3984)	95-97	.....	AR	52454645

RPO DEFINITIONS
C60 – AIR CONDITIONER,FRONT,MANUAL CONTROLS
L36 – ENGINE GAS, 6 CYL, 3.8K, MFI, V6, HO (ERV6 SERIES)

cardiagn.com

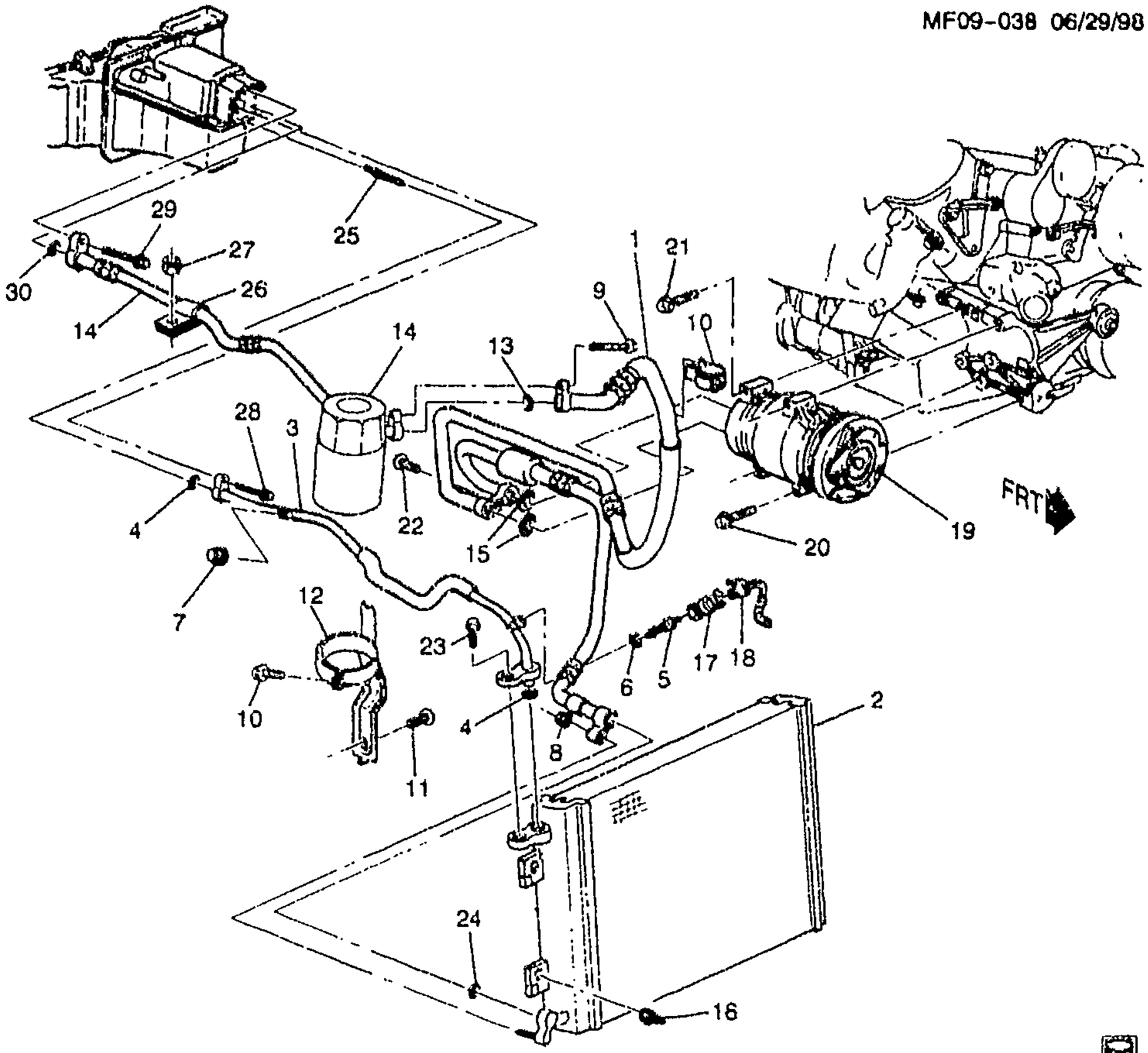

bb

MF09-038

1998-2002 F A/C REFRIGERATION SYSTEM (LS1/ 5.7G)(C60)

1.	8-D17	9.226	**HOSE ASM**, A/C CMPR & CNDSR (INCLS 13, 15, 24, 30) (AC-DELCO #15-31009)	98-02	F (LS1, C60)	1	10409630
2.	8-D13	9.190	**CONDENSER**, A/C (INCL 16) (AC-DELCO #15-6940)	98-02	F (C60)	1	52472662
3.	8-D15	9.220	**TUBE**, A/C EVPR (INCLS 4-7, 25)	98-02	F (C60)	1	10282758
4.	8-D16	9.222	**SEAL**, A/C EVPR TUBE (PART OF 3) (AC-DELCO #15-31054)	98-02	F	1	52477087
5.	8-D11	9.178	**VALVE**, A/C REFRIG HIGH PRESS SERV (PART OF 3) (AC-DELCO #15-5528)	98-01	F	1	10245619

cardiagn.com

	8-D11	9.178	**VALVE**, A/C REFRIG HIGH PRESS SERV (PART OF 3) (AC-DELCO #15-5528)	02	F (C60)	1	10245619
6.		8.927	**O-RING**, ID .301X.070 THK, MATERIAL-NEOPRENE. (PART OF 3) (AC-DELCO #15-3592) ..	98-02	F	1	3093509
7.	8-D10	9.177	**CAP**, A/C REFRIG CHRG VLV (PART OF 3) (AC-DELCO #15-30477)	98-02	F (C60)	1	10245620
	8-D10	9.177	**CAP**, A/C REFRIG CHRG VLV (PART OF 3) (8MM X 1.0) (LOW SIDE SERVICE PORT) (9.220) ...	98	F (C60)	1	52471377
8.		8.917	**NUT**, HFH, M8X1.25, 17.9 OD, 738 THK, 13MM HEX, 10, ZF (PART OF 14) (8.915) (AC-DELCO #11514596)	98-02	F	1	11514596
9.		8.900	**BOLT**, HWH, M8X1.25X40, SPL FULLTHD, AC PT, 10.9 PZOR (A/C CMPR & CNDSR HOSE)	98-02	F	1	11515758
10.	8-D18	9.242	**CLIP**, A/C CMPR HOSE	98-02	F (LS1, C60)	1	10407267
11.	8-D14	9.196	**BOLT**, A/C ACCUM BRKT (M8X1.25X15 POR) (3.023)	98-02	F (C60)	1	14060161
12.	8-D14	9.196	**BRACKET**, A/C ACCUM (INCLS 10)	98-02	F (C60)	1	10239868
13.	8-D16	9.222	**SEAL KIT**, A/C CMPR & CNDSR HOSE MANIF (PART OF 1) (CONTAINS 2 SEALS 5/8") (AC-DELCO #15-2722)	98-02	.....		2724577
		8.927	**O-RING**, 3/4 TUBE O .D., INSIDE DIA .549 (A), .103 (B), .005 (C), .003 (C) (PART OF 1) (AC-DELCO #15-3985)	00	(1ST DES)	AR	52454046
	8-D16	9.222	**SEAL KIT**, A/C CMPR & CNDSR HOSE MANIF (PART OF 1) (CONTAINS 2 SEALS 5/8") (AC-DELCO #15-2722)	98-02	F (C60)	2	2724577
14.	8-D13	9.195	**ACCUMULATOR**, A/C (INCLS 8, 26, 30) (W/HOSE) (AC-DELCO #15-1789)	98-02	F (C60)	1	2724938
15.	8-D16	9.222	**SEAL KIT**, A/C CMPR & CNDSR HOSE MANIF (PART OF 1) (CONTAINS 2 SEALS 5/8") (AC-DELCO #15-2722)	98-02	F (LS1, C60)	1	2724577
16.	8-M15	1.276	**RETAINER**, RAD AIR UPR BFL (PART OF 2) (CHRISTMAS TREE TYPE) (14.731)	98-02	F (C60)	2	20387349
17.	8-D20	9.275	**SENSOR**, A/C REFRIG PRESS (AC-DELCO #15-5724)	98-02	F (C60)	1	22624066
18.	8-D8	9.170	**CONNECTOR**, SEN-A/C REFRIG PRESS (BLACK) (3-WAY F) (W/LEADS) (2.535) (AC-DELCO #PT375)	98-02	F	1	12102748
19.	8-D8	9.170	**COMPRESSOR**, A/C (AC-DELCO #15-20730)	02	F (LS1, C60)	1	1137028
	8-D8	9.170	**COMPRESSOR**, A/C (V7 W/CLUTCH) (AC-DELCO #15-20312)	98-02	F (LS1, C60)	1	1137014

cardiagn.com

20.		8.900	BOLT, HWH, M8X1.25X40, SPL FULLTHD, AC PT, 10.9 PZOR (A/C CMPR)	98-02	F	2	11515758
21.		8.900	BOLT, HFH, M10X1.5X55, 30THD, 22.3 OD, 10.9, 7114, REDUCED BODY (A/C CMPR)	98-02	F	AR	11515771
22.		8.900	BOLT, M10X1.5X32, 28.10 THD, 20.28 OD, 10.9, GM 7114M (A/C CMPR & CNDSR HOSE) (AC-DELCO #179-2006)	98-02	F	1	15725460
23.		8.900	BOLT, HWH, M8X1.25X40, SPL FULLTHD, AC PT, 10.9 PZOR (A/C CMPR & CNDSR HOSE)	98-02	F	1	11515758
24.	8-D16	9.222	SEAL, A/C EVPR TUBE (PART OF 1) (19MM OD X 11MM ID) (METAL/RUBBER "O" RING) (AC-DELCO #15-31055)	98-02	F (LS1, C60)	1	52474373
	8-D16	9.222	SEAL, A/C EVPR TUBE (PART OF 1) (AC-DELCO #15-31054)	98-02	F (C60)	1	52477087
25.	8-D15	9.213	ORIFICE, A/C EVPR TUBE (PART OF 3) (AC-DELCO #15-5378)	98-02	F (C60)	1	3096068
26.		N.S.	CLIP, A/C ACCUM HOSE (PART OF 14)				
27.		8.915	NUT, HEX M10X1.5 6.3 THK STL PL (A/C ACCUM & EVPR TUBE BRKT)	98-02	F	1	11508189
28.		8.900	BOLT, HWH, M8X1.25X40, SPL FULLTHD, AC PT, 10.9 PZOR (A/C CMPR & CNDSR HOSE)	98-02	F	1	11515758
29.		8.900	BOLT, HWH, M8X1.25X40, SPL FULLTHD, AC PT, 10.9 PZOR (A/C CMPR & CNDSR HOSE)	98-02	F	1	11515758
30.	8-D16	9.222	SEAL, A/C CMPR & CNDSR HOSE (PART OF 1, 14) (25MM OD X 17MM ID) (CONTAINS 2 METAL/RUBB"O" RINGS) (AC-DELCO #15-31101)	98-99	F (LS1, C60)	1	2724966
	8-D16	9.222	SEAL, A/C CMPR & CNDSR HOSE (PART OF 1, 14) (25MM OD X 17MM ID) (CONTAINS 2 METAL/RUBB"O" RINGS) (AC-DELCO #15-31101)	00	F (LS1, C60) (2ND DES)	1	2724966
	8-D16	9.222	SEAL, A/C CMPR & CNDSR HOSE (PART OF 1, 14) (25MM OD X 17MM ID) (CONTAINS 2 METAL/RUBB"O" RINGS) (AC-DELCO #15-31101)	01-02	F (LS1, C60)	1	2724966
	8-D16	9.222	SEAL KIT, A/C CMPR & CNDSR HOSE MANIF (PART OF 1, 14) (CONTAINS 2 SEALS 5/8") (AC-DELCO #15-2722)	98-02	F (C60)	2	2724577
		8.927	O-RING, 3/4 TUBE O .D., INSIDE DIA .549 (A), .103 (B), .005 (C), .003 (C) (PART OF 1, 14) (AC-DELCO #15-3985)	00	(1ST DES)	AR	52454646

RPO DEFINITIONS
C60 - AIR CONDITIONER,FRONT,MANUAL CONTROLS

cardiagn.com

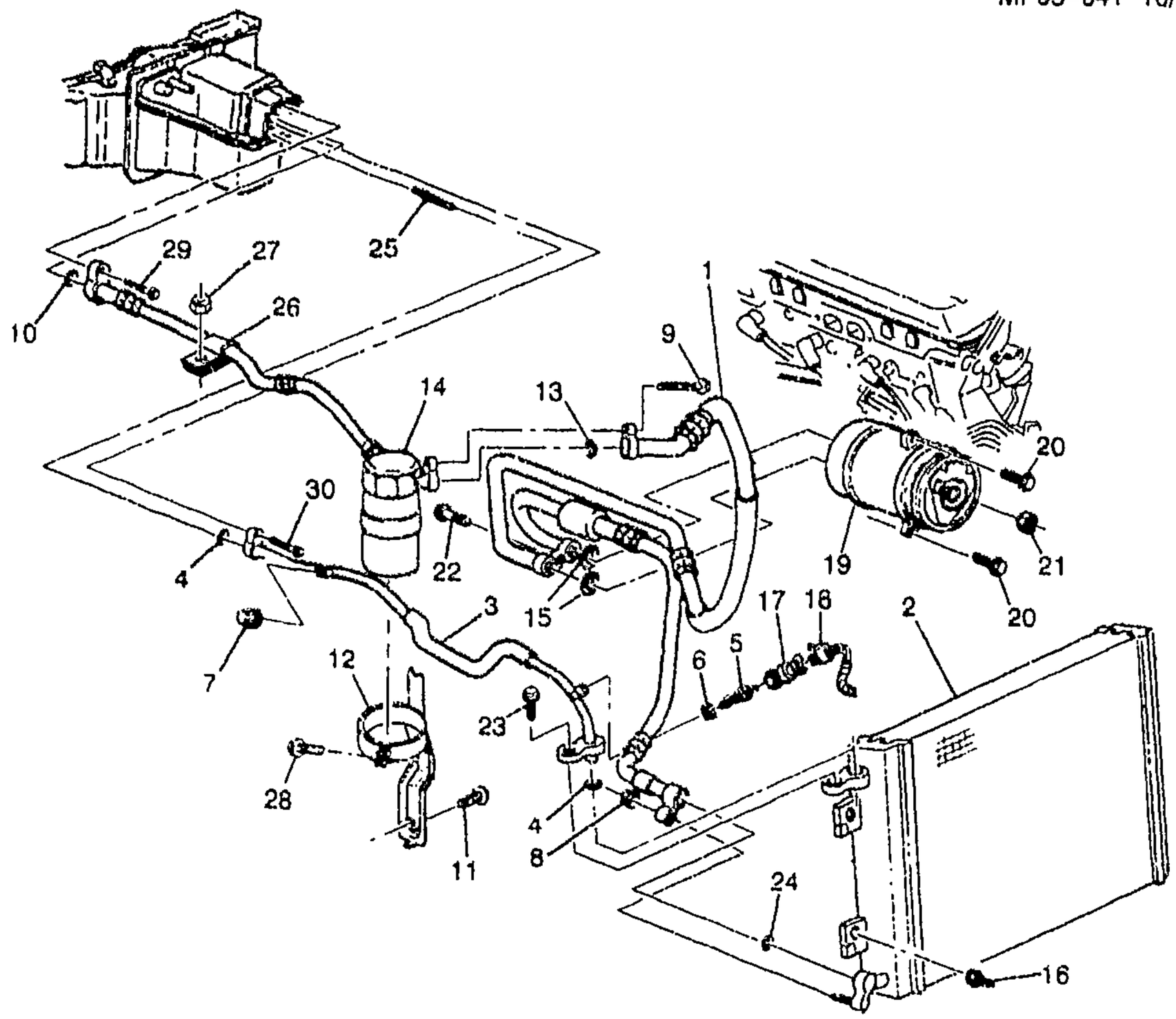

bk

MF09-041

1998-2002 F A/C REFRIGERATION SYSTEM (L36/3.8K)(C60)

1.	8-D17	9.226	**HOSE ASM**, A/C CMPR & CNDSR (INCLS 13, 15, 24) (AC-DELCO #15-31011)	98-99	F (L36, C60)	1	10282757
	8-D17	9.226	**HOSE ASM**, A/C CMPR & CNDSR (INCLS 13, 15, 24) (AC-DELCO #15-31106)	00-02	F (L36, C60)	1	10410477
2.	8-D13	9.190	**CONDENSER**, A/C (INCLS 16) (AC-DELCO #15-6940)	98-02	F (C60)	1	52472662
3.	8-D15	9.220	**TUBE**, A/C EVPR (INCLS 4-7, 25)	98-02	F (C60)	1	10282758
4.	8-D16	9.222	**SEAL**, A/C EVPR TUBE (PART OF 3) (19MM OD X 11MM ID) (METAL/RUBBER "O" RING) (AC-DELCO #15-31055)	98-02	F (L36, C60)	1	52474373

cardiagn.com

	8–D16	9.222	**SEAL**, A/C EVPR TUBE (PART OF 3) (AC–DELCO #15–31054)	93–02	F (C60)	1	52477087
5.	8–D10	9.177	**CORE**, A/C REFRIG SERV VLV (PART OF 3) (W/O O–RING) (AC–DELCO #15–1119)	98–02	F	1	3041827
6.		8.927	**O–RING**, ID .301X.070 THK, MATERIAL–NEOPRENE. (PART OF 3) (AC–DELCO #15–3592) ..	98–02	F	1	3093509
7.	8–D10	9.177	**CAP**, A/C REFRIG CHRG VLV (PART OF 3) (AC–DELCO #15–30477)	98–02	F (C60)	1	10245620
	8–D10	9.177	**CAP**, A/C REFRIG CHRG VLV (PART OF 3) (8MM X 1.0) (LOW SIDE SERVICE PORT) (9.220) ...	98	F (C60)	1	52471377
8.		8.917	**NUT**, HFH, M8X1.25, 17.9 OD, 738 THK, 13MM HEX, 10, ZF (A/C CNDSR TUBE) (8.915) (AC–DELCO #11514596)	98–02	F	1	11514596
9.		8.900	**BOLT**, (A/C CMPR & CNDSR HOSE)	98–02	F	1	10172897
10.	8–D16	9.222	**SEAL**, A/C CMPR & CNDSR HOSE (PART OF 14) (25MM OD X 17MM ID) (CONTAINS 2 METAL/RUBB"O" RINGS) (AC–DELCO #15–31101)	98–99	F (L36, C60)	1	2724966
	8–D16	9.222	**SEAL**, A/C CMPR & CNDSR HOSE (PART OF 14) (25MM OD X 17MM ID) (CONTAINS 2 METAL/RUBB"O" RINGS) (AC–DELCO #15–31101)	01–02	F (L36, C60)	1	2724966
	8–D16	9.222	**SEAL**, A/C CMPR & CNDSR HOSE (1ST DES SEE 52454646) (PART OF 14) (25MM OD X 17MM ID) (CONTAINS 2 METAL/RUBB"O" RINGS) (AC–DELCO #15–31101)	00	F (L36, C60) (2ND DES)	1	2724966
		8.927	**O–RING**, 3/4 TUBE O .D., INSIDE DIA .549 (A), .103 (B), .005 (C), .003 (C) (PART OF 14) (AC–DELCO #15–3985)	98–02	(1ST DES)	AR	52454646
11.	8–D14	9.196	**BOLT**, A/C ACCUM BRKT (M8X1.25X15 POR) (3.023)	98–02	F (C60)	1	14000161
12.	8–D14	9.196	**BRACKET**, A/C ACCUM (INCLS 28)	98–02	F (C60)	1	10239868
13.		8.927	**O–RING**, 3/4 TUBE O .D., INSIDE DIA .549 (A), .103 (B), .005 (C), .003 (C) (PART OF 1) (AC–DELCO #15–3985)	98–02	F	1	52454646
14.	8–D13	9.195	**ACCUMULATOR**, A/C (INCLS 10, 26) (W/HOSE) (AC–DELCO #15–1789)	98–02	F (C60)	1	2724938
15.	8–D16	9.222	**SEAL KIT**, A/C CMPR & CNDSR HOSE MANIF (PART OF 1) (CONTAINS 2 SEALS 5/8") (AC–DELCO #15–2722)	98–02	F (C60)	2	2724577
16.	8–M15	1.276	**RETAINER**, RAD AIR UPR BFL (PART OF 2) (CHRISTMAS TREE TYPE) (14.731)	98–02	F (C60)	2	20387349

cardiaopn.com

17.	8–D20	9.275	**SENSOR**, A/C REFRIG PRESS (AC–DELCO #15–5724)	98–02	F (C60)	1	22624066
18.	8–D8	9.170	**CONNECTOR**, SEN–A/C REFRIG PRESS (BLACK) (3–WAY F) (W/LEADS) (2.535) (AC–DELCO #PT375)	98–02	F	1	12102748
19.	8–D8	9.170	**COMPRESSOR**, A/C (AC–DELCO #15–20454)	02	F (L36, C60)	1	1135436
	8–D8	9.170	**COMPRESSOR**, A/C (V5 W/CLUTCH) (AC–DELCO #15–20342)	98–02	F (L36, C60)	1	1135278
20.		8.900	**BOLT**, HFH M10X1.5X50 10.9 POR (A/C CMPR)	98–02	F	2	11508355
21.		8.915	**NUT**, HFH, 10X1.5 THD, 9.8 THK, 21.8 OD, 510M (10) ZF 7111M (A/C CMPR) (1.062)	98–02	F	1	11514597
22.		8.900	**BOLT**, M10X1.5X32, 28.10 THD, 20.28 OD, 10.9, GM 7114M (A/C CMPR & CNDSR HOSE) (AC–DELCO #179–2006)	98–02	F	1	15726460
23.		8.900	**BOLT**, (A/C EVPR TUBE)	98–02	F	1	10172897
24.		8.927	**O–RING**, 1/2 TUBE O .D., INSIDE DIA .364 (A), .094 (B), .005 (C), .003 (D) (PART OF 1) (AC–DELCO #15–3984)	98–02	F	1	52454645
25.	8–D15	9.213	**ORIFICE**, A/C EVPR TUBE (PART OF 3) (AC–DELCO #15–5378) ..	98–02	F (C60)	1	3096068
26.		N.S.	**CLIP**, A/C ACCUM HOSE (PART OF 14)		.....		
27.		8.915	**NUT**, HEX M10X1.5 6.3 THK STL PL (A/C ACCUM & EVPR TUBE BRKT)	98–02	F	1	11508189
28.		8.977	**SCREW**, HEX W/FLAT WA (PART OF 12)	98–02	F	1	12337828
29.		8.900	**BOLT**, HWH, M8X1.25X40, SPL FULLTHD, AC PT, 10.9 PZOR (A/C CMPR & CNDSR HOSE)	98–02	F	1	11515758
30.		8.900	**BOLT**, HWH, M8X1.25X40, SPL FULLTHD, AC PT, 10.9 PZOR (A/C CMPR & CNDSR HOSE)	98–02	F	1	11515758

RPO DEFINITIONS
C60 – AIR CONDITIONER,FRONT,MANUAL CONTROLS
L36 – ENGINE GAS, 6 CYL, 3.8K, MFI, V6, HO (ERV6 SERIES)

cardiagn.com

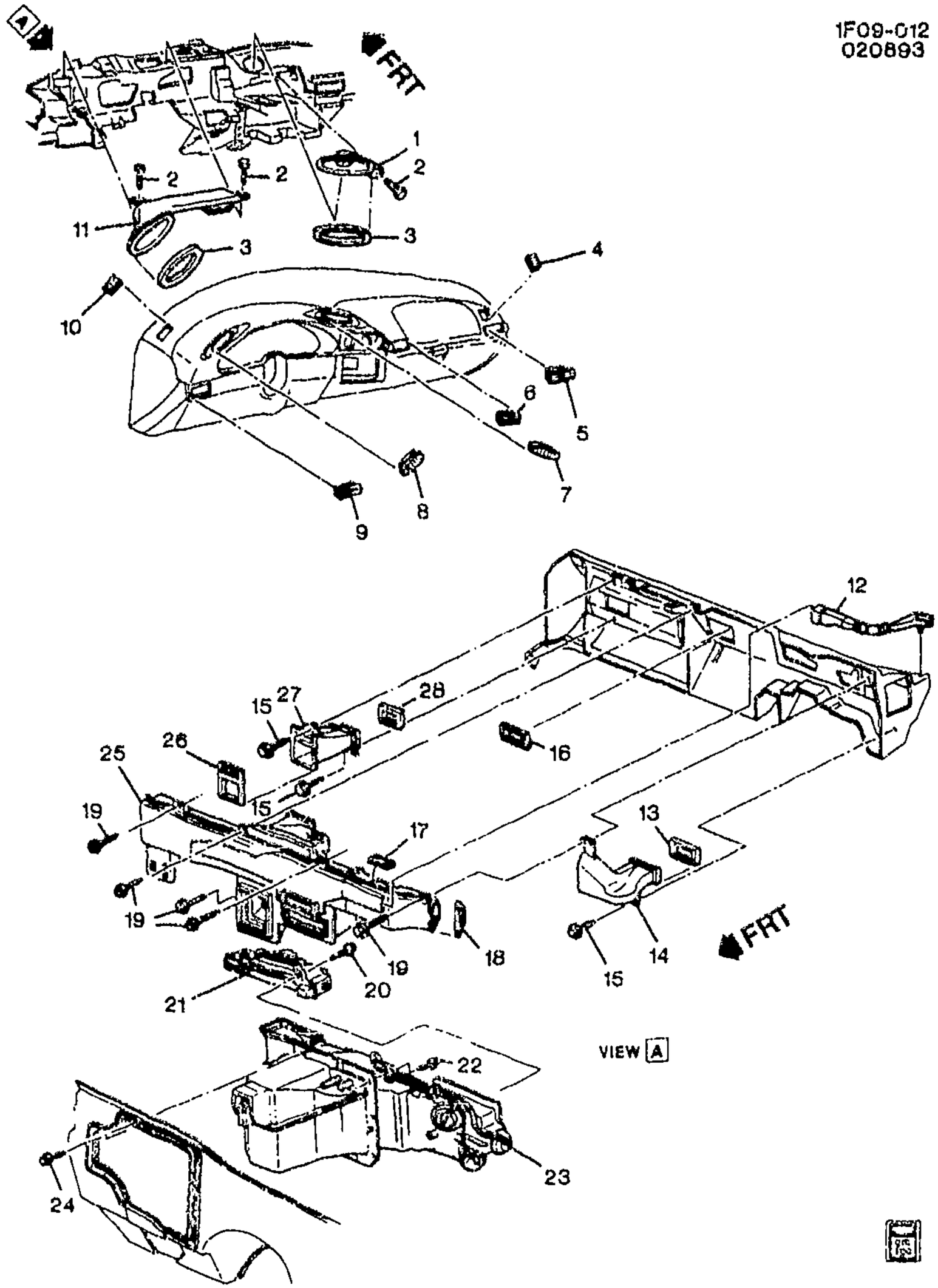

1993-1996 F A/C AIR DISTRIBUTION SYSTEM

1.	8-D18	9.262	DUCT, I/P CTR AIR OTLT (INCLS 3)	93-96 F ..... RH 10188007

cardiagn.com

2.		8.900	**BOLT/SCREW**, HWH W/FL WA M4.2X1.41X20, 6010M, 7253M, 12.5 OD, DOG PT (I/P CTR AIR OTLT DUCT) (8.977)	93–96		3	11509709
3.		N.S.	**SEAL**, I/P CTR AIR OTLT (PART OF 1, 11)				
4.	8–E17	9.780	**GRILLE**, SI WDO DEFG OTLT	93–96	F	1	17997580
5.	8–D18	9.262	**OUTLET**, I/P OTR AIR	93–96	F	1	17997612
6.	8–D18	9.262	**OUTLET**, I/P CTR AIR	93–96	F	1	17997611
7.	8–D18	9.262	**OUTLET**, I/P CTR AIR	93–96	F	RH	17997614
8.	8–D18	9.262	**OUTLET**, I/P CTR AIR	93–96	F	LH	17997615
9.	8–D18	9.262	**OUTLET**, I/P LWR OTR AIR	93–96	F	1	17997627
10.	8–E17	9.780	**GRILLE**, SI WDO DEFG OTLT	93–96	F	1	17990492
11.	8–D18	9.262	**DUCT**, I/P CTR AIR OTLT (INCLS 3)	93–96	F	LH	10153759
12.	8–E17	9.780	**DUCT**, SI WDO DEFG OTLT (W/FOAM INSL)	93–96	F	LH	10245225
13.		N.S.	**SEAL**, I/P OTR AIR OTLT DUCT (PART OF 14)				
14.	8–D18	9.262	**DUCT**, I/P OTR AIR OTLT (INCLS 13)	93–96	F	LH	10138721
15.		8.900	**BOLT/SCREW**, HWH W/FL WA M4.2X1.41X20, 6010M, 7253M, 12.5 OD, DOG PT (I/P OTR AIR OTLT DUCT) (8.977)	93–96		3	11509709
16.		N.S.	**SEAL**, I/P CTR AIR OTLT				
17.		N.S.	**SEAL**, I/P CTR AIR OTLT DUCT (PART OF 25)				
18.		N.S.	**SEAL**, W/S DEFR NOZ & AIR DISTR (PART OF 25)				
19.		8.900	**BOLT/SCREW**, HWH W/FL WA M4.2X1.41X20, 6010M, 7253M, 12.5 OD, DOG PT (AIR DISTR DUCT) (8.977)	93–96		5	11509709
20.		8.900	**BOLT/SCREW**, HWH W/FL WA M4.2X1.41X20, 6010M, 7253M, 12.5 OD, DOG PT (FLR AIR OTLT DUCT) (8.977)	93–96		2	11509709
21.	8–D18	9.262	**DUCT**, FLR AIR OTLT	93–96	F	1	10153750
22.		8.977	**SCREW**, (M6.3–1.81X35 HEX TAP W/CONICAL & SEAL WA–PC) (A/C EVAP & BLO MDL)	93–96		4	499558
23.		N.S.	**MODULE**, HTR & A/C EVPR & BLO (SEE "A/C & HEATER MODULE" ILLUSTRATION IN GRP. 9.000 FOR DETAILED VIEW.)				
		N.S.	**MODULE**, HTR & BLO (SEE "HEATER & BLOWER ASM" ILLUSTRATION IN GRP. 8.000 FOR DETAILED VIEW.)	93–96	F (C41)		
24.	8–D14	9.211	**BOLT**, A/C EVPR & BLO MDL	93–96	F	7	10188031
25.	8–E17	9.779	**DISTRIBUTOR**, W/S DEFR NOZ & AIR (INCLS 17, 18) (USE W/SIR DERM 16139070)	93	F (1ST DES)	1	10170168
	8–E17	9.779	**DISTRIBUTOR**, W/S DEFR NOZ & AIR (INCLS 17, 18) (USE W/SIR DERM 16193430)	93	F (2ND DES)	1	10229294

cardiagn.com

	8–E17	9.779	DISTRIBUTOR, W/S DEFR NOZ & AIR (INCLS 17, 18)	94–95	F	1	10229294
	8–E17	9.779	DISTRIBUTOR, W/S DEFR NOZ & AIR (INCLS 17, 18)	96	F	1	10261665
26.		N.S.	SEAL, I/P OTR AIR OTLT DUCT (PART OF 27)				
27.	8–D18	9.262	DUCT, I/P OTR AIR OTLT (INCLS 26, 28)	93–96	F	RH	10138720
28.		N.S.	SEAL, I/P UPR OTR AIR OTLT (PART OF 27)				

RPO DEFINITIONS

C41 – HEATER,OUTSIDE AIR,WITH FAN AND DEFROSTER

cardiagn.com

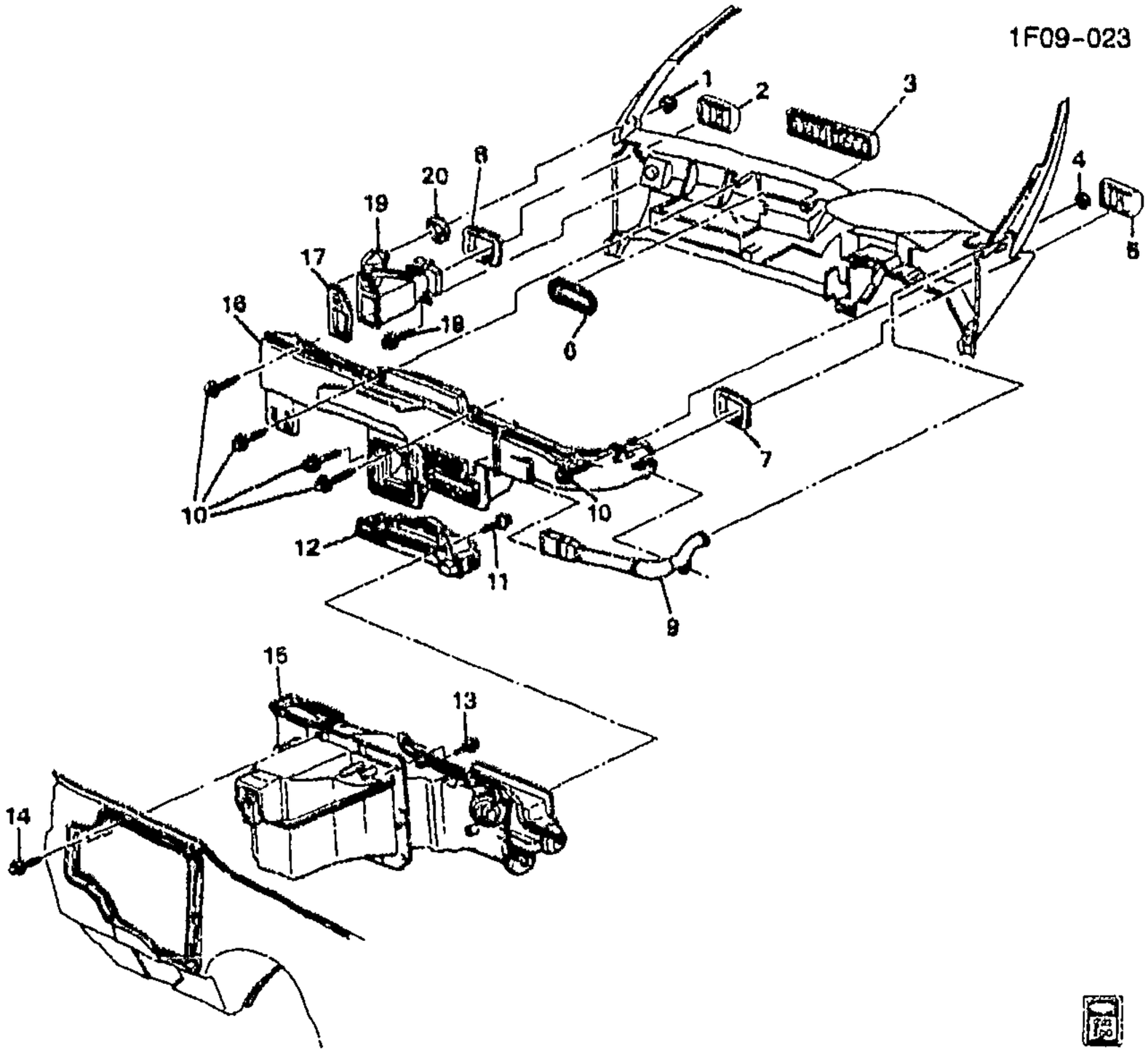

1F09-023

1997-2002 F A/C AIR DISTRIBUTION SYSTEM

1.	8-E17	9.780	GRILLE, SI WDO DEFG OTLT (GRAPHITE)	97-02	F	LH	10268190
2.	8-D18	9.262	OUTLET, I/P OTR AIR (LH/RH)	97-02	F	2	10271263
3.	8-D18	9.262	OUTLET, I/P CTR AIR	97-02	F	2	10271310
4.	8-E17	9.780	GRILLE, SI WDO DEFG OTLT (GRAPHITE)	97-02	F	LH	10268190
5.	8-D18	9.262	OUTLET, I/P OTR AIR (LH/RH)	97-02	F	2	10271263
6.		N.S.	SEAL, I/P CTR AIR OTLT (PART OF 16)				
7.		N.S.	SEAL, W/S DEFR NOZ & AIR DISTR (PART OF 16)				
8.		N.S.	SEAL, I/P OTR AIR OTLT (PART OF 19)				
9.	8-E17	9.780	DUCT, SI WDO DEFG OTLT	97-02	F	LH	10138735
10.		8.900	BOLT/SCREW, HWH W/FL WA M4.2X1.41X20, 6010M, 7253M, 12.5 OD, DOG PT (AIR DISTR DUCT) (8.977)	97-02		5	11509709

cardiagn.com

11.		8.900	**BOLT/SCREW**, HWH W/FL WA M4.2X1.41X20, 6010M, 7253M, 12.5 OD, DOG PT (FLR AIR OTLT DUCT) (8.977)	97–02		2	11509709
12.	8–D18	9.262	**DUCT**, FLR AIR OTLT	97–02	F	1	10153750
13.		8.977	**SCREW**, (M6.3–1.81X35 HEX TAP W/CONICAL & SEAL WA–PC) (A/C EVAP & BLO MDL)	97–02		4	499558
14.	8–D14	9.211	**BOLT**, A/C EVPR & BLO MDL	97–02	F	7	10188031
15.		N.S.	**MODULE**, HTR & A/C EVPR & BLO (SEE "A/C & HEATER MODULE ASM." ILLUSTRATION IN GRP. 9.000 FOR DETAILED VIEW.)	97–02	F (C60)		
16.	8–E17	9.779	**DISTRIBUTOR**, W/S DEFR NOZ & AIR (INCLS 6, 7)	97–02	F	1	10277466
17.		N.S.	**SEAL**, I/P OTR AIR OTLT DUCT (PART OF 19)				
18.		8.900	**BOLT/SCREW**, HWH W/FL WA M4.2X1.41X20, 6010M, 7253M, 12.5 OD, DOG PT (I/P OTR AIR OTLT DUCT) (8.977)	97–02		2	11509709
19.	8–D18	9.262	**DUCT**, I/P OTR AIR OTLT (INCLS 8, 17, 20)	97–02	F	RH	10277446
20.		N.S.	**SEAL**, SI WDO DEFG OTLT DUCT (PART OF 19)				

RPO DEFINITIONS
C60 – AIR CONDITIONER,FRONT,MANUAL CONTROLS

cardiagn.com

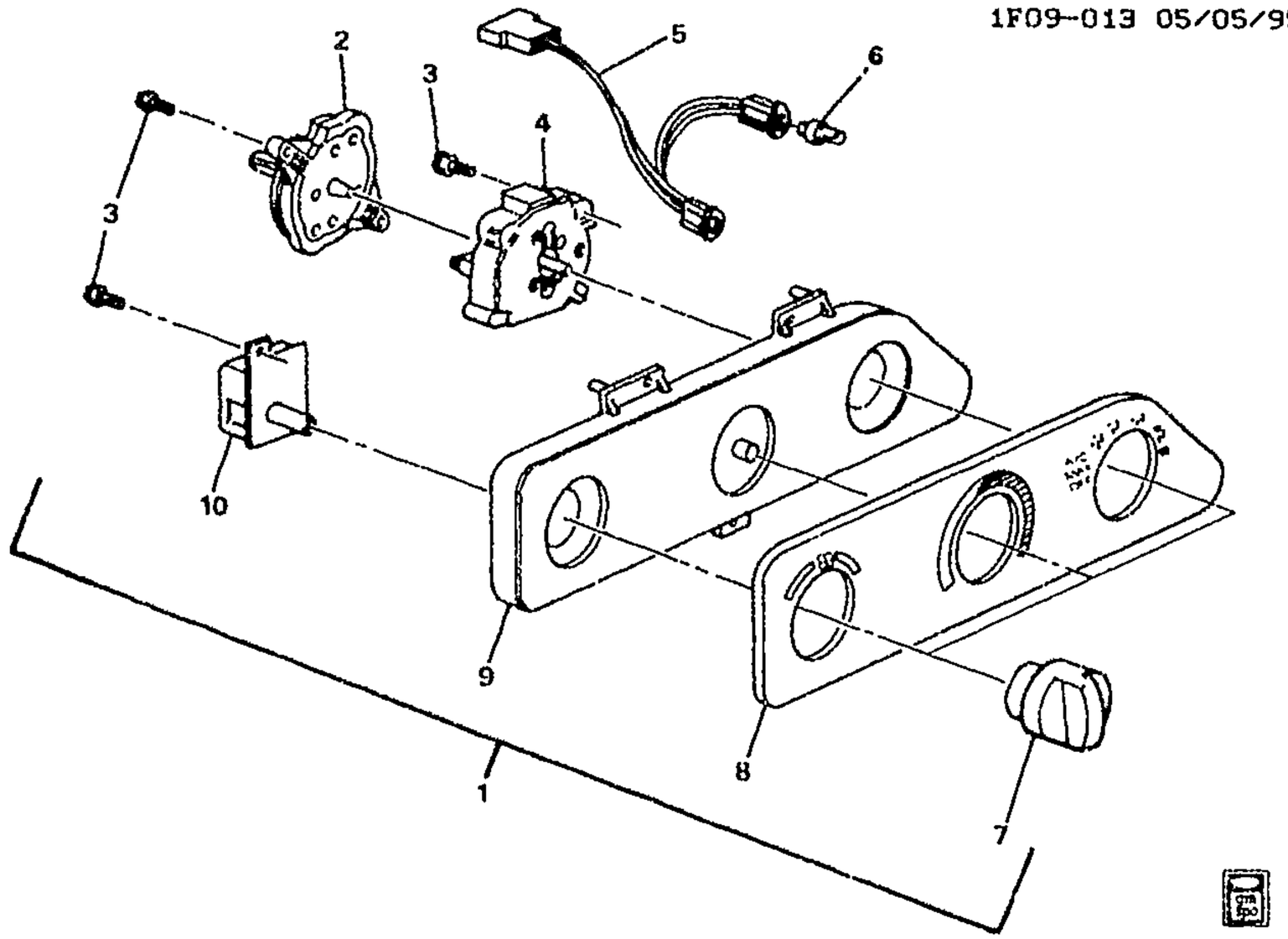

1993-1996 F A/C & HEATER CONTROL ASM (C60)

1.	8-D19	9.273	CONTROL, HTR & A/C (AC-DELCO #15-72041)	93	F (C60)	1	16100411
	8-D19	9.273	CONTROL, HTR & A/C (AC-DELCO #15-72069)	94-96	F (C60)	1	16183811
2.	8-D23	9.280	VALVE, HTR & A/C CONT VAC (AC-DELCO #15-71967)	93-96	F		16159553
3.		N.S.	BOLT, HTR & A/C CONT				
4.	8-D20	9.275	SWITCH, HTR & A/C CONT SEL (AC-DELCO #15-71894)	93-96	F (C60)	1	16147649
5.	8-M16	2.480	HARNESS, HTR & A/C CONT LP WRG (9.276)	93-96	F (C60)	1	16159548
6.	8-D23	9.279	BULB, HTR & A/C CONT LP (AC-DELCO #7895189)	93-96	F	2	7895189
7.	8-D21	9.278	KNOB, HTR & A/C CONT BLO SW (8.852)	93	F	3	16159554
	8-D21	9.278	KNOB, HTR & A/C CONT BLO SW	94-96	F (C60)	1	16183912
	8-D21	9.278	KNOB, HTR & A/C CONT MODE (8.852)	93	F	3	16159554
	8-D21	9.278	KNOB, HTR & A/C CONT MODE	94-96	F (C60)	1	16183912
	8-D21	9.278	KNOB, HTR & A/C CONT TEMP (8.852)	93	F	3	16159554
	8-D21	9.278	KNOB, HTR & A/C CONT TEMP	94-96	F (C60)	1	16183912
8.		DISCON	DIAL, HTR & A/C CONT	93	F (C60)	1	16181018

cardiagn.com

							1F09–013
9.		N.S.	PLATE, HTR & A/C CONT DIAL BKG		.....		
10.	8–D20	9.275	SWITCH, HTR & A/C CONT BLO (8.852) (AC–DELCO #15–71960)	93–96	F (C49, C60, VD1)	1	16159876

RPO DEFINITIONS
C49 – DEFOGGER,REAR WINDOW,ELECTRIC
C60 – AIR CONDITIONER,FRONT,MANUAL CONTROLS
VD1 – PROVISION OPTIONS,EUROPE(EXPORT)

cardiagn.com

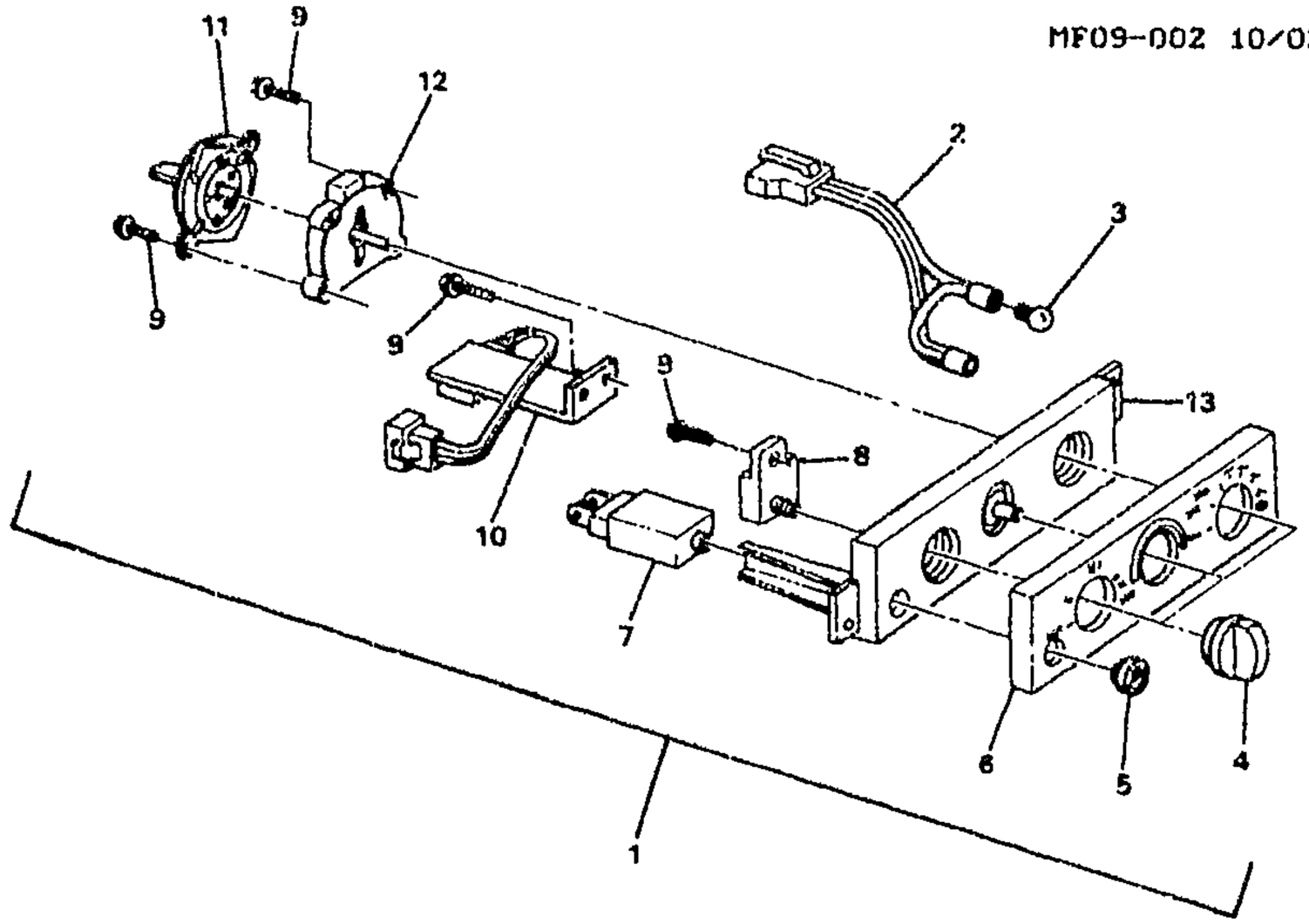

MF09-002

1997-2002 F A/C & HEATER CONTROL ASM (C60)

1.	8-D19	9.273	CONTROL, HTR & A/C (INCLS 2-13) (AC-DELCO #15-72291)	97	F67 (C60)	1	16216451
	8-D19	9.273	CONTROL, HTR & A/C (INCLS 2-13) (AC-DELCO #15-72291)	97	F87 (C49, C60)	1	16216451
	8-D19	9.273	CONTROL, HTR & A/C (INCLS 2-13) (AC-DELCO #15-72292)	97	F87 (C60) (EXC C49) ..	1	16216461
	8-D19	9.273	CONTROL HTR & A/C (INCLS 2-13) (AC-DELCO #15-72291)	98-99	F67 (C60) (EXC VD1) ..	1	16216451
	8-D19	9.273	CONTROL, HTR & A/C (INCLS 2-13) (AC-DELCO #15-72291)	98-99	F87 (C49, C60) (EXC VD1)	1	16216451
	8-D19	9.273	CONTROL, HTR & A/C (INCLS 2-13) (AC-DELCO #15-72292)	98-99	F87 (C60) (EXC C49, VD1)	1	16216461
	8-D19	9.273	CONTROL, HTR & A/C (INCLS 2-13) (AC-DELCO #15-72562)	00-02	F67 (C60) (EXC VD1) ..	1	9351461
	8-D19	9.273	CONTROL, HTR & A/C (INCLS 2-13) (AC-DELCO #15-72562)	00-02	F87 (C49, C60) (EXC VD1)	1	9351461
	8-D19	9.273	CONTROL, HTR & A/C (INCLS 2-13) (AC-DELCO #15-72563)	00-02	F87 (C60) (EXC C49, VD1)	1	9351471
	8-D19	9.273	CONTROL, HTR & A/C (INCLS 2-13) (AC-DELCO #15-72564)	02	F67 (C60, VD1)	1	9351481
	8-D19	9.273	CONTROL, HTR & A/C (INCLS 2-13) (AC-DELCO #15-72564)	02	F87 (C49, C60, VD1) ...	1	9351481
	8-D19	9.273	CONTROL, HTR & A/C (INCLS 2-13) (AC-DELCO #15-72460)	98-99	F67 (C60, VD1) (EXPORT)	1	16216491
	8-D19	9.273	CONTROL, HTR & A/C (INCLS 2-13) (AC-DELCO #15-72460)	98-99	F87 (C49, C60, VD1) (EXPORT)	1	16216491
	8-D19	9.273	CONTROL, HTR & A/C (INCLS 2-13) (AC-DELCO #15-72564)	00-02	F67 (C60, VD1) (EXPORT)	1	9351481

cardiagn.com

2.	8-M16	2.480	**HARNESS**, HTR & A/C CONT LP WRG (PART OF 1) (9.276)	97-02	F (C60)	1	16159548
3.	8-D23	9.279	**BULB**, HTR & A/C CONT LP (PART OF 1) (AC-DELCO #7895189)	97-02	F	2	7395189
4.	8-D21	9.278	**KNOB**, HTR & A/C CONT BLO SW (PART OF 1)	97-98	F (C49, C60, VD1)	1	16229005
	8-D21	9.278	**KNOB**, HTR & A/C CONT BLO SW (PART OF 1)	98-99	F (C60)	1	16229053
	8-D21	9.278	**KNOB**, HTR & A/C CONT BLO SW (PART OF 1)	00-02	F (C60) (EXC VD1)	3	16229053
	8-D21	9.278	**KNOB**, HTR & A/C CONT BLO SW (PART OF 1)	02	F67 (C60, VD1)	3	16250549
	8-D21	9.278	**KNOB**, HTR & A/C CONT BLO SW (PART OF 1)	02	F87 (C49, C60, VD1) ...	3	16250549
	8-D21	9.278	**KNOB**, HTR & A/C CONT MODE (PART OF 1)	97	F (C60)	1	16229053
	8-D21	9.278	**KNOB**, HTR & A/C CONT MODE (PART OF 1)	98-99	F (C49, C60) (EXC VD1)	1	16229053
	8-D21	9.278	**KNOB**, HTR & A/C CONT MODE (PART OF 1)	00-02	F67 (C60) (EXC VD1) ..	1	16229053
	8-D21	9.278	**KNOB**, HTR & A/C CONT MODE (PART OF 1)	00-02	F87 (C49, C60) (EXC VD1)	1	16229053
	8-D21	9.278	**KNOB**, HTR & A/C CONT TEMP (PART OF 1)	97	F (C60)	1	16229053
	8-D21	9.278	**KNOB**, HTR & A/C CONT TEMP (PART OF 1)	98-99	F (C49, C60) (EXC VD1)	1	16229053
	8-D21	9.278	**KNOB**, HTR & A/C CONT TEMP (PART OF 1)	00-02	F67 (C60) (EXC VD1) ..	1	16229053
	8-D21	9.278	**KNOB**, HTR & A/C CONT TEMP (PART OF 1)	00-02	F87 (C49, C60) (EXC VD1)	1	16229053
	8-D21	9.278	**KNOB**, HTR & A/C CONT TEMP (PART OF 1)	02	F (C60)	1	16229005
	8-D21	9.278	**KNOB**, HTR & A/C CONT BLO SW (PART OF 1)	99	F67 (C60, VD1) (EXPORT)	1	16229005
	8-D21	9.278	**KNOB**, HTR & A/C CONT BLO SW (PART OF 1)	99	F87 (C49, C60, VD1) (EXPORT)	1	16229005
	8-D21	9.278	**KNOB**, HTR & A/C CONT BLO SW (PART OF 1)	00-02	F67 (C60, VD1) (EXPORT)	3	16250549
	8-D21	9.278	**KNOB**, HTR & A/C CONT BLO SW (PART OF 1)	00-02	F87 (C49, C60, VD1) (EXPORT)	3	16250549
	8-D21	9.278	**KNOB**, HTR & A/C CONT MODE (PART OF 1)	98-99	F (C49, C60, VD1) (EXPORT)	1	16229005
	8-D21	9.278	**KNOB**, HTR & A/C CONT TEMP (PART OF 1)	98-99	F (C49, C60, VD1) (EXPORT)	1	16229005
5.		N.S.	**PUSHBUTTON**, R/WDO DEFG SW (PART OF 1)		.....		
6.	8-D19	9.273	**CONTROL**, HTR & A/C (PART OF 1) (AC-DELCO #15-72291)	97	F67 (C60)	1	16216451
	8-D19	9.273	**CONTROL**, HTR & A/C (PART OF 1) (AC-DELCO #15-72291)	97	F87 (C49, C60)	1	16216451
	8-D19	9.273	**CONTROL**, HTR & A/C (PART OF 1) (AC-DELCO #15-72292)	97	F87 (C60) (EXC C49) ..	1	16216461
	8-D19	9.273	**CONTROL**, HTR & A/C (PART OF 1) (AC-DELCO #15-72291)	98-99	F67 (C60) (EXC VD1) ..	1	16216451
	8-D19	9.273	**CONTROL**, HTR & A/C (PART OF 1) (AC-DELCO #15-72291)	98-99	F87 (C49, C60) (EXC VD1)	1	16216451

cardiaccn.com

							MF09-002
	8-D19	9.273	**CONTROL**, HTR & A/C (PART OF 1) (AC-DELCO #15-72292)	98-99	F87 (C60) (EXC C49, VD1)	1	16216461
	8-D19	9.273	**CONTROL**, HTR & A/C (PART OF 1) (AC-DELCO #15-72562)	00-02	F67 (C60) (EXC VD1) ..	1	9351461
	8-D19	9.273	**CONTROL**, HTR & A/C (PART OF 1) (AC-DELCO #15-72562)	00-02	F87 (C49, C60) (EXC VD1)	1	9351461
	8-D19	9.273	**CONTROL**, HTR & A/C (PART OF 1) (AC-DELCO #15-72563)	00-02	F87 (C60) (EXC C49, VD1)	1	9351471
	8-D19	9.273	**CONTROL**, HTR & A/C (PART OF 1) (AC-DELCO #15-72564)	02	F67 (C60, VD1)	1	9351481
	8-D19	9.273	**CONTROL**, HTR & A/C (PART OF 1) (AC-DELCO #15-72564)	02	F87 (C49, C60, VD1) ...	1	9351481
	8-D19	9.273	**CONTROL**, HTR & A/C (PART OF 1) (AC-DELCO #15-72460)	98-99	F67 (C60, VD1) (EXPORT)	1	16216491
	8-D19	9.273	**CONTROL**, HTR & A/C (PART OF 1) (AC-DELCO #15-72460)	98-99	F87 (C49, C60, VD1) (EXPORT)	1	16216491
	8-D19	9.273	**CONTROL**, HTR & A/C (PART OF 1) (AC-DELCO #15-72564)	00-02	F67 (C60, VD1) (EXPORT)	1	9351481
	8-D19	9.273	**CONTROL**, HTR & A/C (PART OF 1) (AC-DELCO #15-72564)	00-02	F87 (C49, C60, VD1) (EXPORT)	1	9351481
7.		N.S.	**SWITCH**, R/WDO DEFG (PART OF 1)		.....		
8.	8-D20	9.275	**SWITCH**, HTR & A/C CONT BLO (PART OF 1) (8.852) (AC-DELCO #15-71960)	97-98	F (C49, C60, VD1)	1	16159876
	8-C19	8.849	**SWITCH**, HTR & A/C CONT BLO (PART OF 1) (8.852) (AC-DELCO #15-71960)	99-02	F (C60)	1	16159876
9.		6.900	**BOLT/SCREW**, HWH W/FL WA M4.2X1.41X20, 6010M, 7253M, 12.5 OD, DOG PT (PART OF 1) (8.977)	97-02	.....	2	11509709
10.		N.S.	**RELAY**, R/WDO DEFG (PART OF 1)		.....		
11.		N.S.	**VALVE**, HTR & A/C CONT VAC (PART OF 1, 12)		.....		
12.	8-D20	9.275	**SWITCH**, HTR & A/C CONT SEL (INCLS 11) (PART OF 1) (AC-DELCO #15-72303)	97-02	F (C60)	1	16229007
13.		N.S.	**PLATE**, HTR & A/C CONT DIAL BKG (PART OF 1)		....		

RPO DEFINITIONS

C49 – DEFOGGER,REAR WINDOW,ELECTRIC
C60 – AIR CONDITIONER,FRONT,MANUAL CONTROLS
VD1 – PROVISION OPTIONS,EUROPE(EXPORT)

cardiagn.com

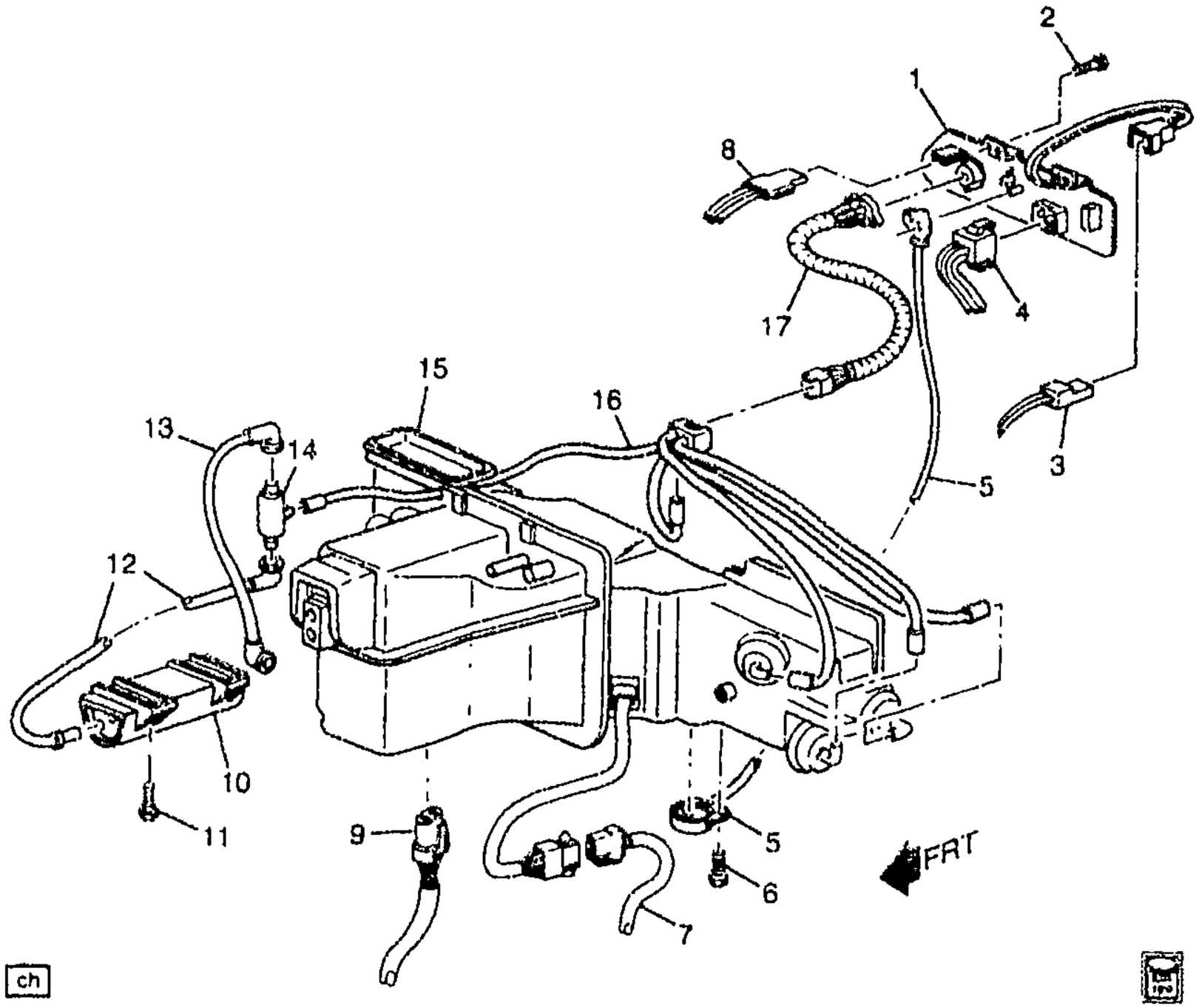

ch

1F09-015

1993-2002 F A/C CONTROL SYSTEM (C60)

1.	8-D19	9.273	CONTROL, HTR & A/C (AC-DELCO #15-72041)	93	F (C60)	1	16190411
	8-D19	9.273	CONTROL, HTR & A/C (AC-DELCO #15-72069)	94-96	F (C60)	1	16183811
	8-D19	9.273	CONTROL, HTR & A/C (AC-DELCO #15-72291)	97	F67 (C60)	1	16216451
	8-D19	9.273	CONTROL, HTR & A/C (AC-DELCO #15-72291)	97	F87 (C49, C60)	1	16216451
	8-D19	9.273	CONTROL, HTR & A/C (AC-DELCO #15-72292)	97	F87 (C60) (EXC C49) ..	1	16216461
	8-D19	9.273	CONTROL, HTR & A/C (AC-DELCO #15-72291)	98-99	F67 (C60) (EXC VD1) ..	1	16216451
	8-D19	9.273	CONTROL, HTR & A/C (AC-DELCO #15-72291)	98-99	F87 (C49, C60) (EXC VD1)	1	16216451
	8-D19	9.273	CONTROL, HTR & A/C (AC-DELCO #15-72292)	98-99	F87 (C60) (EXC C49, VD1)	1	16216461
	8-D19	9.273	CONTROL, HTR & A/C (AC-DELCO #15-72562)	00-02	F67 (C60) (EXC VD1) ..	1	9351461
	8-D19	9.273	CONTROL, HTR & A/C (AC-DELCO #15-72562)	00-02	F87 (C49, C60) (EXC VD1)	1	9351461
	8-D19	9.273	CONTROL, HTR & A/C	00-02	F87 (C60) (EXC C49,	1	9351471

cardiagn.com

	8-D19	9.273	**CONTROL**, HTR & A/C (AC-DELCO #15-72564)	02	F67 (C60, VD1)	1	9351481
	8-D19	9.273	**CONTROL**, HTR & A/C (AC-DELCO #15-72564)	02	F87 (C49, C60, VD1) ...	1	9351481
	8-D19	9.273	**CONTROL**, HTR & A/C (AC-DELCO #15-72460)	98-99	F67 (C60, VD1) (EXPORT)	1	16216491
	8-D19	9.273	**CONTROL**, HTR & A/C (AC-DELCO #15-72460)	98-99	F87 (C49, C60, VD1) (EXPORT)	1	16216491
	8-D19	9.273	**CONTROL**, HTR & A/C (AC-DELCO #15-72564)	00-02	F67 (C60, VD1) (EXPORT)	1	9351481
	8-D19	9.273	**CONTROL**, HTR & A/C (AC-DELCO #15-72564)	00-02	F87 (C49, C60, VD1) (EXPORT)	1	9351481
2.		8.900	**BOLT/SCREW**, HWH W/FL WA M4.2X1.41X20, 6010M, 7253M, 12.5 OD, DOG PT (HTR & A/C CONT) (8.977)	93-02	.....	3	11509709
3.	8-D20	9.275	**CONNECTOR**, SW-HTR & A/C CONT SEL (3-WAY F) (W/LEADS) (10.150) (AC-DELCO #PT442)	93-02	F	1	12117269
4.	8-D20	9.275	**CONNECTOR**, SW-HTR & A/C CONT SEL (3-WAY F) (W/LEADS) (10.150) (AC-DELCO #PT442)	93-02	F	1	12117269
5.	8-E18	9.787	**CABLE**, TEMP CONT	93-96	F	1	10281598
	8-E18	9.787	**CABLE**, TEMP CONT	97-02	F	1	10418042
6.		8.900	**BOLT/SCREW**, HWH W/FL WA M4.2X1.41X20, 6010M, 7253M, 12.5 OD, DOG PT (TEMP CONT CBL) (8.977)	93-02	.....	1	11509709
7.	8-D20	9.276	**CONNECTOR**, INLINE-TO A/C HARN (6-WAY F W/LEADS) (13.090) (AC-DELCO #PT1032) .	93-02	F87	1	15305888
8.	8-D20	9.275	**CONNECTOR**, SW-HTR & A/C CONT SEL (3-WAY F) (W/LEADS) (10.150) (AC-DELCO #PT442)	93-02	F	1	12117269
9.	8-D15	9.215	**CONNECTOR**, MOT-BLO (2-WAY F) (AC-DELCO #PT275)	93-02	F	1	12102484
10.	8-D23	9.281	**TANK**, HTR & A/C CONT VAC ...	93-02	F	1	10188042
11.		8.977	**BOLT**, SCR HEX W/FLAT WA 12 DIA TYPE AB (HTR & A/C CONT VAC TK)	93-02	.....	2	11509374
12.	8-D23	9.281	**HOSE**, HTR & A/C CONT VAC TK (TO TANK) (PART OF FWD LAMP HARN)	93-97	F	1	12124134
	8-D23	9.281	**HOSE**, HTR & A/C CONT VAC TK (TO TANK) (PART OF FWD LAMP HARN)	98-02	F	1	12186372
13.		8.962	**HOSE**, BULK 5/32X25FT (HTR & A/C CONT VAC SCE)	93-02	F	AR	9439381
14.	8-D23	9.281	**VALVE**, HTR & A/C CONT VAC SCE HOSE CHK (STAMPED 3271)	98-02	F	1	15733271
	8-D23	9.280	**VALVE**, HTR & A/C CONT VAC (STAMPED 6648) (3.885)	93-97	F	1	14056648

cardiagn.com

							1P08-015
15.		N.S.	**MODULE**, HTR & A/C EVPR & BLO (SEE "A/C & HEATER MODULE" ILLUSTRATION IN GRP. 9.000 FOR DETAILED VIEW.)		....		
16.	8-D23	9.281	**HARNESS**, AIR VLV ACTR VAC ..	93-02	F (C60)	1	52458911
17.	8-D23	9.281	**HARNESS**, HTR & A/C CONT VAC	93-95	F	1	10138731
	8-D23	9.281	**HARNESS**, HTR & A/C CONT VAC	97-02	F	1	10283222

RPO DEFINITIONS
C49 – DEFOGGER,REAR WINDOW,ELECTRIC
C60 – AIR CONDITIONER,FRONT,MANUAL CONTROLS
VD1 – PROVISION OPTIONS,EUROPE(EXPORT)

cardiagn.com

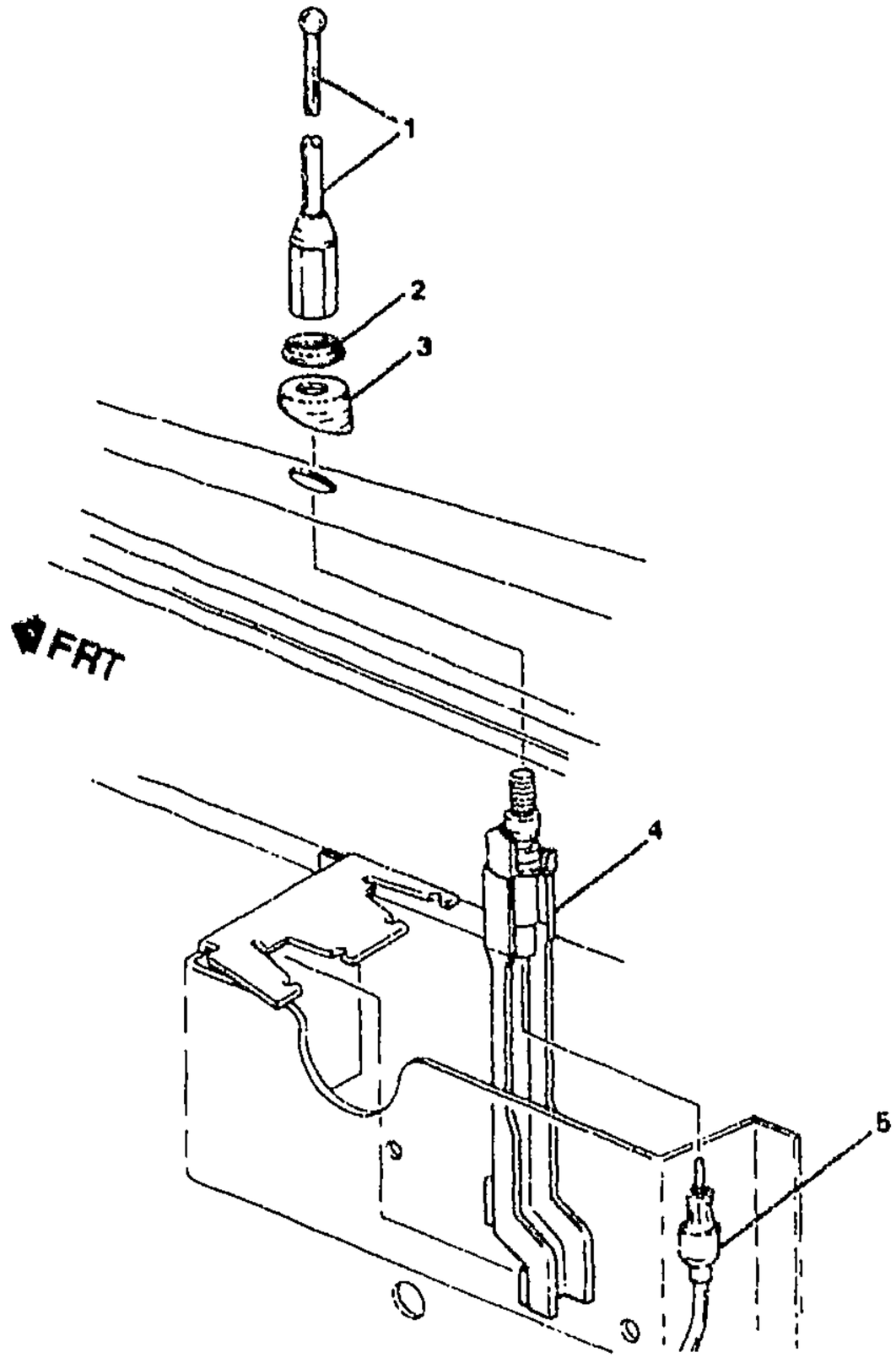

MF09-035

1993-1996 F ANTENNA ASM/FIXED(U73)
1997 F ANTENNA ASM/FIXED(U73)(1ST DES)

1.	8-D24	9.647	**ANTENNA**, RDO (AC-DELCO #10098560)	93	F (U73)	1	10098560
	8-D24	9.647	**ANTENNA**, RDO (AC-DELCO #10098560) (8MM THREADS)	94	F (U73) (1ST DES)	1	10098560
	8-D24	9.647	**ANTENNA**, RDO (3/4" SHORT BASE) (W/O DIMPLE) (AC-DELCO #10289035) (HAS 6MM THREADS.)	94	F (U73) (2ND DES)	1	10289035
	8-D24	9.647	**ANTENNA**, RDO (3/4" SHORT BASE) (W/O DIMPLE) (AC-DELCO #10289035)	95-97	F (U73)	1	10289035
2.	8-D24	9.647	**NUT**, RDO ANT BRKT (M8X1.25X5.0.25.0 OD, ZINC DIE CAST, W30A-848 BLACK 30 GLOSS) (AC-DELCO	93	F (U73)	1	10098562

cardiagn.com

	8-D24	9.647	NUT, RDO ANT BRKT (M8X1.25X5.0.25.0 OD, ZINC DIE CAST, W30A-848 BLACK 30 GLOSS) (AC-DELCO #10098562) (8MM DIA THREADS FOR ANTENNA MAST)	94	F (U73) (1ST DES)	1	10093562
	8-D24	9.647	NUT, RDO ANT BRKT (AC-DELCO #22549794) (6MM DIA THREADS FOR ANTENNA MAST)	94	F (U73) (2ND DES)	1	22549794
	8-D24	9.647	NUT, RDO ANT BRKT (AC-DELCO #22549794) (USE W/HARD PLASTIC HIGH GLOSS BEZEL)	95-97	F (U73)	1	22549794
3.	8-D24	9.647	BEZEL, RDO ANT (AC-DELCO #10238416)	93	F (U73)	1	10238416
	8-D24	9.647	BEZEL, RDO ANT (AC-DELCO #10238416) (8MM DIA THREADS FOR ANTENNA MAST)	94	F (U73) (1ST DES)	1	10238416
	8-D24	9.647	BEZEL, RDO ANT (HIGH GLOSS, HARD PLASTIC) (AC-DELCO #10253391) (6MM DIA THREADS FOR ANTENNA MAST)	94	F (U73) (2ND DES)	1	10253391
	8-D24	9.647	BEZEL, RDO ANT (HIGH GLOSS, HARD PLASTIC) (AC-DELCO #10253391)	95-96	F (U73)	1	10253391
	8-D24	9.647	BEZEL, RDO ANT (FOR 2ND DES SEE 10298264) (HIGH GLOSS, HARD PLASTIC) (AC-DELCO #10253391)	97	F (U73) (1ST DES)	1	10253391
4.	8-D24	9.647	BRACKET, RDO ANT (AC-DELCO #10257131)	93	F (U73)	1	10257131
	8-D24	9.647	BRACKET, RDO ANT (AC-DELCO #10253228) (6MM DIA THREADS FOR ANTENNA MAST)	94	F (U73) (2ND DES)	1	10253228
	8-D24	9.647	BRACKET, RDO ANT (AC-DELCO #10257131) (8MM DIA THREADS FOR ANTENNA MAST)	94	F (U73) (1ST DES)	1	10257131
	8-D24	9.647	BRACKET, RDO ANT (AC-DELCO #10253228)	95-97	F (U73)	1	10253228
5.	8-D24	9.647	CABLE, RDO ANT (4670MM) (AC-DELCO #12103391)	93-94	F	1	12103391
	8-D24	9.647	CABLE, RDO ANT (4670MM) (AC-DELCO #12103391)	95	F67	1	12103391
	8-D24	9.647	CABLE, RDO ANT (4485MM) (AC-DELCO #12124115)	95-96	F87	1	12124115
	8-D24	9.647	CABLE, RDO ANT (AC-DELCO #12162904)	96	F67	1	12162904
	8-D24	9.647	CABLE, RDO ANT (AC-DELCO #12162904)	97	F67 (EXC ETA)	1	12162904
	8-D24	9.647	CABLE, RDO ANT (AC-DELCO #12186450)	97	F67 (ETA)	1	12186450
	8-D24	9.647	CABLE, RDO ANT (AC-DELCO #12186133)	97	F87 (W52, W53, W54, W55, W56)	1	12186133

cardiagn.com

ETA – HARNESS,INSTRUMENT PANEL,#1
U73 – ANTENNA,FIXED
W52 – ENTERTAINMENT SYSTEM OPTION B
W53 – ENTERTAINMENT SYSTEM OPYION C
W54 – ENTERTAINMENT SYSTEM OPTION D
W55 – ENTERTAINMENT SYSTEM OPYION E
W56 – ENTERTAINMENT SYSTEM OPTION F

cardiagn.com

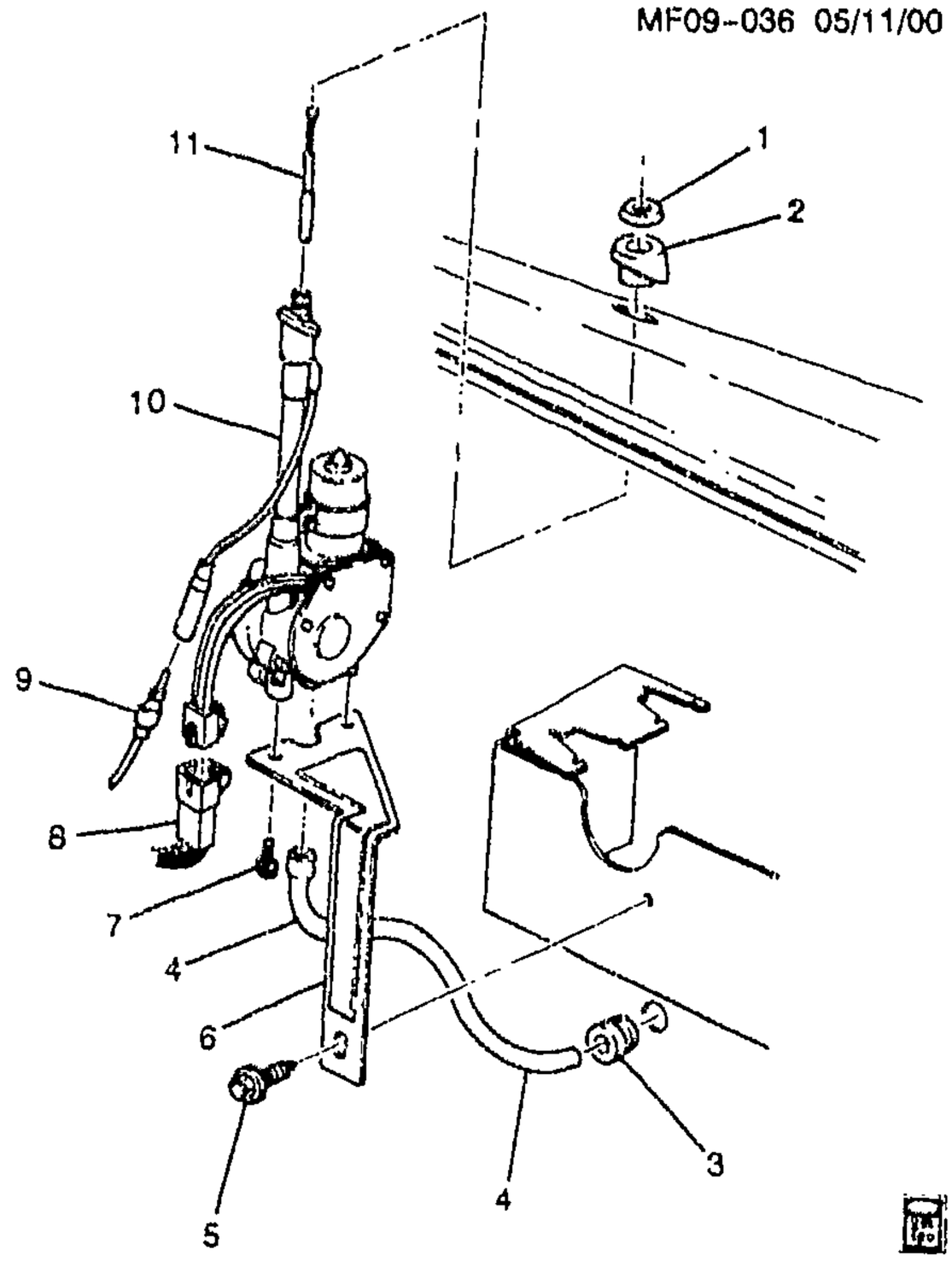

MF09-036

1993-2002 F ANTENNA ASM/POWER (U75)

1.	8-D24	9.647	NUT, RDO PWR ANT (PART OF 10)	93-97	F (U75)	1	10195517
	8-D24	9.647	NUT, RDO PWR ANT (PART OF 10) (AC-DELCO #12369494)	98-02	F (U75)	1	12369494
2.	8-D24	9.647	BEZEL, RDO PWR ANT (PART OF 10) (HARD PLASTIC, HIGH GLOSS) (AC-DELCO #10256631)	93-96	F (U75)	1	10256631
	8-D24	9.647	BEZEL, RDO PWR ANT (FOR 2ND DES SEE 10298264) (PART OF 10) (HARD PLASTIC, HIGH GLOSS) (AC-DELCO #10256631)	97	F (U75) (1ST DES)	1	10256631
	8-D24	9.647	BEZEL, RDO ANT (PART OF 10) (SOFT RUBBER, LOW GLOSS) (AC-DELCO #10298264)	98	F	1	10298264
	8-D24	9.647	BEZEL, RDO ANT (PART OF 10) (SOFT RUBBER, LOW GLOSS) (AC-DELCO #10298264)	99-01	F (U75)	1	10298264

cardiagn.com

	8–D24	9.647	**BEZEL**, RDO ANT (PART OF 10) (SOFT RUBBER, LOW GLOSS) (AC–DELCO #10298264)	02	F (U73, U75)	1	10298264
	8–D24	9.647	**BEZEL**, RDO ANT (1ST DESIGN SEE 10256631 HIGH GLOSS, HARD PLASTIC) (PART OF 10) (SOFT RUBBER, LOW GLOSS) (AC–DELCO #10298264)	97	F (U75) (2ND DES)	1	10298264
3.	8–D24	9.647	**GROMMET**, RDO PWR ANT DRN HOSE (PART OF 10) (AC–DELCO #10136754)	93–02	F (U75)	1	10136754
4.	8–D24	9.647	**NUT**, RDO PWR ANT (PART OF 10)	93–97	F (U75)	1	10195517
	8–D24	9.647	**NUT**, RDO PWR ANT (PART OF 10) (AC–DELCO #12369494) ...	98–02	F (U75)	1	12369494
5.		8.977	**SCREW**, HWH TAP M6.3X1.81X16 POR (PART OF 10)	93–02	.....	AR	11504689
6.		N.S.	**BRACKET**, RDO PWR ANT (PART OF 10)		....		
7.		8.977	**SCREW**, HWH TAP M6.3X1.81X16 POR (PART OF 10)	93–02	.....	AR	11504689
8.	8–D24	9.647	**CONNECTOR**, RLY–RDO PWR ANT (3–WAY M) (9.709) (AC–DELCO #PT455)	93–02	F	1	12117322
9.	8–D24	9.647	**CABLE**, RDO ANT (4670MM) (AC–DELCO #12103391)	93–94	F	1	12103391
	8–D24	9.647	**CABLE**, RDO ANT (4485MM) (AC–DELCO #12124115)	95–96	F87	1	12124115
	8–D24	9.647	**CABLE**, RDO ANT (AC–DELCO #12186133)	97	F87 (W52, W53, W54, W55, W56)	1	12186133
	8–D24	9.647	**CABLE**, RDO ANT (AC–DELCO #12186133)	98–02	F87	1	12186133
10.	8–D24	9.645	**ANTENNA**, RDO PWR (INCLS 1–4, 6–7) (INCLUDES ANTENNA, NUT AND GROMMET) (AC–DELCO #10282646)	98–02	F (U75)	1	10282646
	8–D24	9.645	**ANTENNA**, RDO PWR (ANTENNA MOUNTING BEZEL IS HARD PLASTIC, HIGH GLOSS) (INCLS 1–4, 6–7) (AC–DELCO #10269281)	97	F (U75) (1ST DES)	1	10269281
	8–D24	9.645	**ANTENNA**, RDO PWR (ANTENNA MOUNTING BEZEL IS SOFT RUBBER, LOW GLOSS) (INCLS 1–4, 6–7) (INCLUDES ANTENNA, NUT AND GROMMET) (AC–DELCO #10282646)	97	F (U75) (2ND DES)	1	10282646
	8–D24	9.645	**ANTENNA**, RDO PWR (INCLS 1–4, 6–7) (AC–DELCO #10269281)	93–96	F (U75) (EXPORT)	1	10269281

cardiagn.com

11.	8-D24	9.647	**ANTENNA**, RDO PWR (W/O GR & MOT) (INCLS CNCT SPR/CBL) (BLACK CHROME PLATE) (MAST REPL) (AC-DELCO #10256439) .	**96-02**	F (U75)	1	**10256439**
	8-D24	9.647	**ANTENNA**, RDO PWR (W/O GR & MOT) (INCLS CNCT SPR/CBL) (BLACK CHROME PLATE) (MAST REPL) (AC-DELCO #10256439) .	**93-97**	F (U75) (EXPORT)	1	**10256439**

RPO DEFINITIONS
U73 – ANTENNA,FIXED
U75 – ANTENNA,POWER(CHROME)
W52 – ENTERTAINMENT SYSTEM OPTION B
W53 – ENTERTAINMENT SYSTEM OPYION C
W54 – ENTERTAINMENT SYSTEM OPTION D
W55 – ENTERTAINMENT SYSTEM OPYION E
W56 – ENTERTAINMENT SYSTEM OPTION F

cardiagn.com

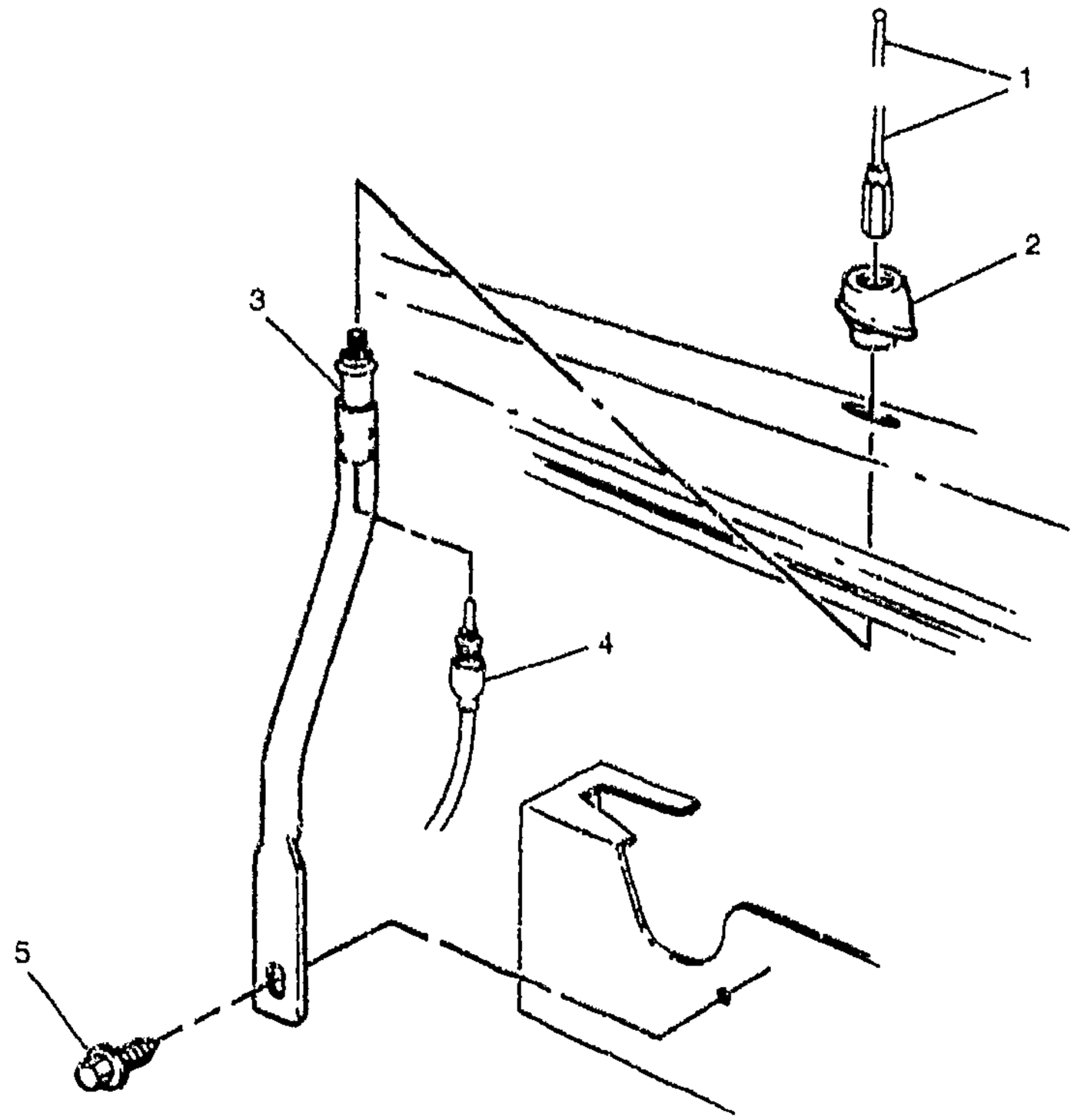

MF09-039

1997 F ANTENNA ASM/FIXED(U73)(2ND DES)
1998-2002 F ANTENNA ASM/FIXED(U73)

1.	8-D24	9.647	**ANTENNA**, RDO (3/4" SHORT BASE) (W/O DIMPLE) (AC-DELCO #10289035)	97-98	F (U73)	1	10289035
	8-D24	9.647	**ANTENNA**, RDO (3/4" SHORT BASE) (W/DIMPLE) (AC-DELCO #10425536)	99-02	F (U73)	1	10425536
2.	8-D24	9.647	**BEZEL**, RDO ANT (SOFT RUBBER, LOW GLOSS) (AC-DELCO #10298264)	98	F	1	10298264
	8-D24	9.647	**BEZEL**, RDO ANT (SOFT RUBBER, LOW GLOSS) (AC-DELCO #10298264)	99-02	F (U73)	1	10298264
	8-D24	9.647	**BEZEL**, RDO ANT (SOFT RUBBER, LOW GLOSS) (AC-DELCO #10298264)	02	F (U73, U75)	1	10298264

cardiagn.com

	8-D24	9.647	**BEZEL**, RDO ANT (FOR 1ST DES SEE 10253391) (SOFT RUBBER, LOW GLOSS) (AC-DELCO #10298264)	97	F (U73) (2ND DES)	1	10298264
	8-D24	9.647	**BEZEL**, RDO ANT (HIGH GLOSS, HARD PLASTIC) (AC-DELCO #10253391)	97	(U73) (1ST DES)		10253391
3.	8-D24	9.647	**BRACKET**, RDO ANT (AC-DELCO #10253228)	97	F (U73)	1	10253228
	8-D24	9.647	**BRACKET**, RDO ANT (CHEVY FIXED MAST ANT)	98-02	F (U73)	1	10425534
	8-D24	9.647	**BRACKET**, RDO ANT (ANTENNA MOUNTING BEZEL IS SOFT RUBBER, LOW GLOSS) (CHEVY FIXED MAST ANT)	97	F (U73) (2ND DES)	1	10425534
4.	8-D24	9.647	**CABLE**, RDO ANT (AC-DELCO #12162904)	97	F67 (EXC ETA)	1	12162904
	8-D24	9.647	**CABLE**, RDO ANT (AC-DELCO #12186450)	97-98	F67 (ETA)	1	12186450
	8-D24	9.647	**CABLE**, RDO ANT (AC-DELCO #12186133)	97	F87 (W52, W53, W54, W55, W56)	1	12186133
	8-D24	9.647	**CABLE**, RDO ANT (AC-DELCO #12186133)	98-02	F87	1	12186133
	8-D24	9.647	**CABLE**, RDO ANT (AC-DELCO #12186450)	99-02	F67	1	12186450
5.		8.900	**BOLT**, HFH, M8X1.25X20, 17THD, 16OD (RDO ANT BRKT)	97-02	F	1	11515756

RPO DEFINITIONS

ETA -- HARNESS,INSTRUMENT PANEL,#1
U73 -- ANTENNA,FIXED
U75 -- ANTENNA,POWER(CHROME)
W52 -- ENTERTAINMENT SYSTEM OPTION B
W53 -- ENTERTAINMENT SYSTEM OPYION C
W54 -- ENTERTAINMENT SYSTEM OPTION D
W55 -- ENTERTAINMENT SYSTEM OPYION E
W56 -- ENTERTAINMENT SYSTEM OPTION F

cardiagn.com

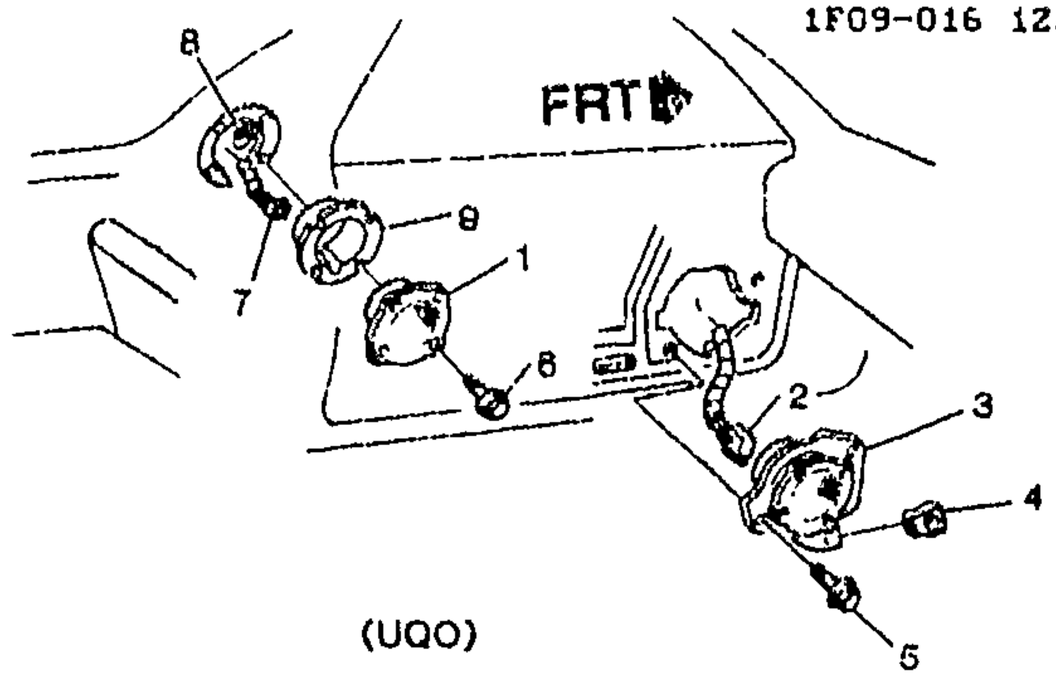

(UQO)

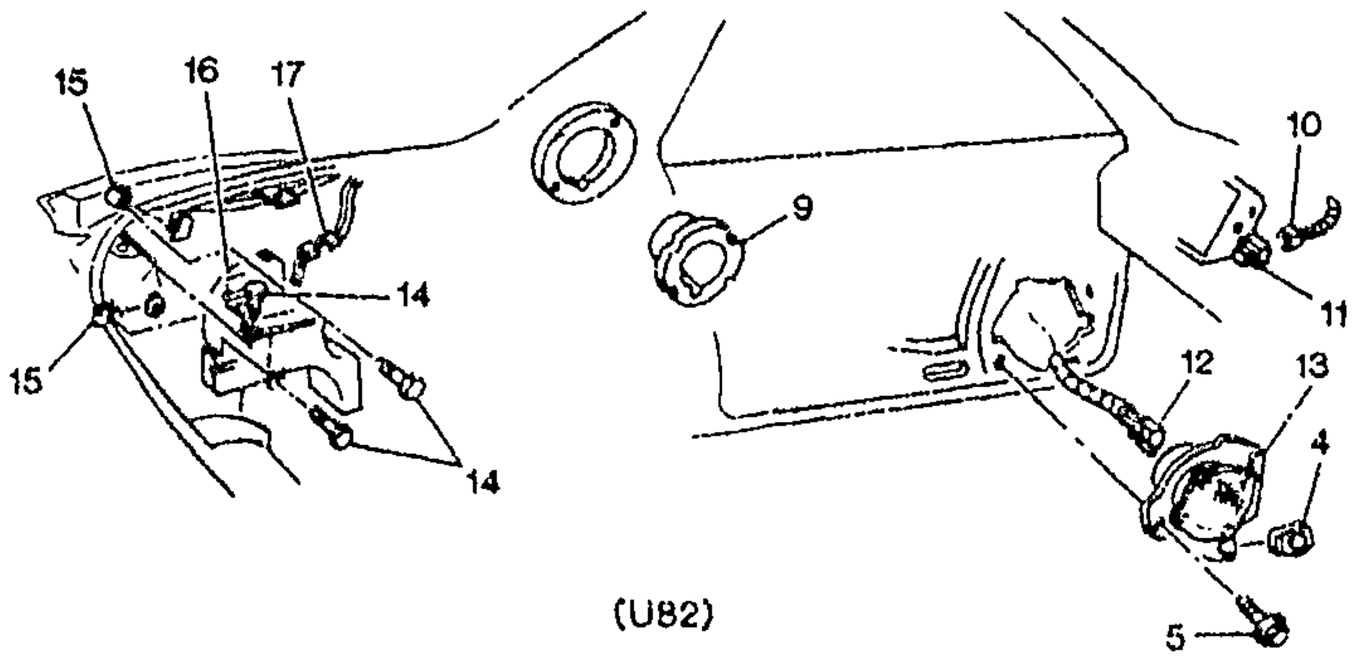

(U82)

1993-1994 F87 AUDIO SYSTEM

NOTE: FOR INFORMATION ON SPEAKER GRILLES SEE TRIM ILLUSTRATIONS IN GROUP 14.000.

1.	8-E7	9.665	**SPEAKER**, RDO QTR (AC-DELCO #16193541)	93-94	F (UQ0)	2	16193541
	8-E7	9.665	**SPEAKER**, RDO QTR (AC-DELCO #16215431)	94	F (UL8, U62)	2	16215431
2.	8-E6	9.656	**CONNECTOR**, INLINE-TO RDO SPKR (GRAY) (2-WAY F W/LEADS) (INDEX TAB CTR CAVITY A&B) (2.535) (AC-DELCO #PT217)	93-94	F (UQ0)	2	12101825
3.	8-E7	9.665	**SPEAKER**, RDO FRT S/D (INCLS 4) (AC-DELCO #9361839) (MUST ALSO USE 52351[illegible] 4 NUT)	93	F87 (UQ0)	RH	9361839
	8-E7	9.665	**SPEAKER**, RDO FRT S/D (INCLS 4) (AC-DELCO #9361849) (MUST ALSO USE 52351724 NUT)	93	F87 (UQ0)	LH	9361849
	8-E7	9.665	**SPEAKER**, RDO FRT S/D (INCLS 4) (6" COAX) (AC-DELCO #9361919)	94	F (U62)	RH	9361919

cardiagn.com

	8–E7	9.665	**SPEAKER**, RDO FRT S/D (INCLS 4) (AC–DELCO #9361929)	94	F (U62)	LH	9361929
	8–E7	9.665	**SPEAKER**, RDO FRT S/D (INCLS 4) (AC–DELCO #16194961)	94	F87 (UL8, U62)	RH	16194961
	8–E7	9.665	**SPEAKER**, RDO FRT S/D (INCLS 4) (AC–DELCO #9361839)	94	FP87 (UQ0)	RH	9361839
	8–E7	9.665	**SPEAKER**, RDO FRT S/D (INCLS 4) (AC–DELCO #9361849)	94	FP87 (UQ0)	LH	9361849
	8–E7	9.665	**SPEAKER**, RDO FRT S/D (INCLS 4) (6" COAX) (AC–DELCO #9361919)	94	F87 (UL8, U62) (EXPORT)	RH	9361919
	8–E7	9.665	**SPEAKER**, RDO FRT S/D (INCLS 4) (AC–DELCO #9361929)	94	F87 (UL8, U62) (EXPORT)	LH	9361929
4.		8.921	**NUT**, U–TYPE, 4.2X1.41, DIM A–15, DIM B–14 DIM C–8 65, 1050, PZOR (FRT S/D SPKR) (PART OF 3)	93–94	.....	6	12338121
5.		8.977	**SCREW**, LG RD HD TORX TAP M4.2X1.41X20 SS BL OX (RDO FRT S/D SPKR)	93–94	.....	6	16751144
6.		8.977	**BOLT**, HWH M4.2X1.41X25 PZOR TAP 17 OD (RDO RR SPKR)	93–94	.....	8	11508233
7.	8–E6	9.656	**CONNECTOR**, INLINE–TO RDO SPKR (GRAY) (2–WAY F W/LEADS) (INDEX TAB CTR CAVITY A&B) (2.535) (AC–DELCO #PT217)	93–94	F (UQ0)	2	12101825
8.		8.921	**NUT**, SPG U–SHAPED, M4.2X1.41, 17 LGTH, 13 WIDTH, POR, 1065 (RDO RR SPKR)	93–94	.....	8	11513715
9.		N.S.	**COVER**, RDO RR SPKR OPG		.....		
10.	8–E2	9.650	**CONNECTOR**, RDO SPKR AMPF RLY (BLACK) (6–WAY F) (W/O LEADS) (3.900)	93–94	F	1	12110541
11.	8–E2	9.650	**RELAY**, RDO SPKR AMPF (BLACK) (5–WAY M) (USED W/CONNECTOR 15306045) (W/OUT BRKTS) (9.277) (AC–DELCO #15–8719)	93	F	1	12193601
	8–N3	2.510	**RELAY**, RDO SPKR AMPF (BLACK) (5–WAY M) (USED W/CONNECTOR 15306045) (W/OUT BRKTS) (9.277) (AC–DELCO #15–8719)	93	F (U82)	1	12193601
	8–E2	9.650	**RELAY**, RDO (BLACK) (5–WAY M) (USED W/CONNECTOR 15306045) (W/OUT BRKTS) (9.277) (AC–DELCO #15–8719)	94	F87	1	12193601
12.	8–E6	9.656	**CONNECTOR**, INLINE–TO RDO SPKR (6–WAY F) (W/LEADS) (2.535) (AC–DELCO #PT246) ...	93–94	F (U82)	2	12101854
13.	8–E7	9.665	**SPEAKER**, RDO FRT S/D (USED W/P/N 16204521 STAMPED ON LBL) (AC–DELCO #16204521) (IF REPLG RH, MUST ALSO REPL LH–#16204531 TO ENSURE CORRECT SOUND BAL)	93–94	FP87 (U82)	RH	16204521

cardiagn.com

	8–E7	9.665	**SPEAKER**, RDO FRT S/D (USED W/P/N 16204531 STAMPED ON LABEL) (AC–DELCO #16204531) (IF REPLG LH, MUST ALSO REPL RH–#16204521 TO ENSURE CORRECT SOUND BAL)	93–94	FP87 (U82)	LH	16204531
	8–E7	9.665	**SPEAKER**, RDO FRT S/D (6" COAX) (AC–DELCO #9361919) .	94	F (U62)	RH	9361919
	8–E7	9.665	**SPEAKER**, RDO FRT S/D (AC–DELCO #9361929)	94	F (U62)	LH	9361929
	8–E7	9.665	**SPEAKER**, RDO FRT S/D (AC–DELCO #16194961)	94	F87 (UL8, U62)	RH	16194961
	8–E7	9.665	**SPEAKER**, RDO FRT S/D (6" COAX) (AC–DELCO #9361919) .	94	F87 (UL8, U62) (EXPORT)	RH	9361919
	8–E7	9.665	**SPEAKER**, RDO FRT S/D (AC–DELCO #9361929)	94	F87 (UL8, U62) (EXPORT)	LH	9361929
14.		8.977	**SCREW**, 6.3X1.81X20 (RDO RR SPKR)	93–94	.....	3	11509051
15.		8.921	**NUT–U SHAPE (M6X1**, 1060 PEOR) MULIT–THREAD SPRING (RDO RR SPKR)	93–94	.....	2	11518121
16.	8–E7	9.665	**SPEAKER**, RDO RR (AC–DELCO #16204541)	93–94	F87 (U82)	1	16204541
17.	8–E6	9.656	**CONNECTOR**, INLINE–TO RDO SPKR (6–WAY F W/LEADS) (13.090) (AC–DELCO #PT1032) .	93–94	F (U82)	1	15305886

RPO DEFINITIONS

UL8 – FREQUENCIES–SAUDI ARABIAN RADIO(EXPORT)
UQ0 – SPEAKER SYSTEM,4,DUAL FRONT DOOR MOUNTED,DUAL STANDARD RANGE PACKAGE SHELF/QUARTER
U62 – SPEAKER SYSTEM,4,DUAL COAX FRONT,DUAL COAX PACKAGE SHELF
U82 – SPEAKER SYSTEM 3, DUAL DR MTD, RR PKG SHELF

cardiagn.com

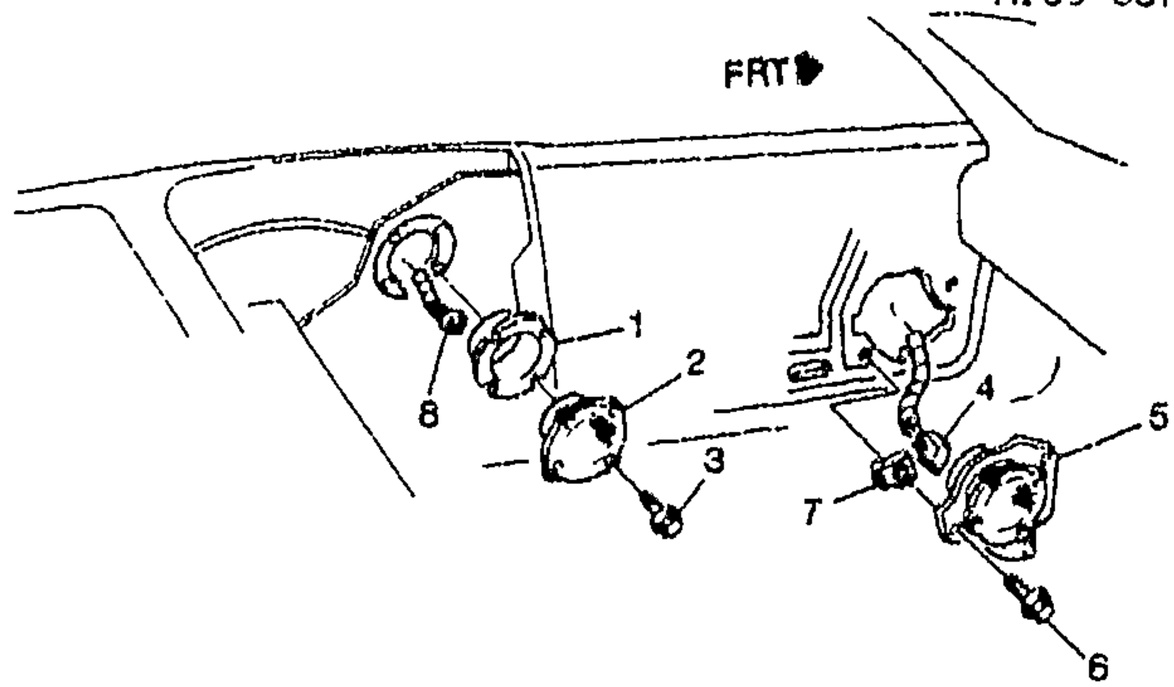

MF09-037

1994-2002 F67 AUDIO SYSTEM

NOTE: FOR INFORMATION ON SPEAKER GRILLES SEE TRIM ILLUSTRATIONS IN GROUP 14.000.

1.		DISCON	COVER, RDO RR SPKR OPG	94-96	F67	2	10254663
		N.S.	COVER, RDO RR SPKR OPG (PART ELIMINATED IN 1997)	97-02	.....		
2.	8-E7	9.665	SPEAKER, RDO QTR (AC-DELCO #16193541)	94-96	F (UQ0)	2	16193541
	8-E7	9.665	SPEAKER, RDO QTR (AC-DELCO #16215431)	94-95	F (UL8, U62)	2	16215431
	8-E7	9.665	SPEAKER, RDO QTR (AC-DELCO #16215431)	96	F67 (U62)	2	16215431
	8-E7	9.665	SPEAKER, RDO QTR (AC-DELCO #16257961)	99-02	F67 (U59)	2	16257961
	8-E7	9.665	SPEAKER, RDO QTR (6"THIN COAX SAIL PNL) (AC-DELCO #16220771)	97-99	F67 (U62)	2	16220771
3.		8.900	BOLT/SCREW, HWH W/FL WA M4.2X1.41X20, 6010M, 7253M, 12.5 OD, DOG PT (RDO RR SPKR) (8.977)	94-02	.....	8	11509709
4.	8-E6	0.656	CONNECTOR, INLINE-TO RDO SPKR (GRAY) (2-WAY F W/LEADS) (INDEX TAB CTR CAVITY A&B) (2.535) (AC-DELCO #PT217)	94-02	F (UQ0)	2	12101825
5.	8-E7	9.665	SPEAKER, RDO FRT S/D (6" COAX) (AC-DELCO #9361919) .	94-99	F (U62)	RH	9361919
	8-E7	9.665	SPEAKER, RDO FRT S/D (AC-DELCO #9361929)	94-99	F (U62)	LH	9361929
	8-E7	9.665	SPEAKER, RDO FRT S/D (AC-DELCO #16194961)	94-96	F67 (U62)	RH	16194961
	8-E7	9.665	SPEAKER, RDO FRT S/D (AC-DELCO #16194961)	97-98	F (U62)	RH	16194961
	8-E7	9.665	SPEAKER, RDO FRT S/D (6" COAX) (AC-DELCO #9361859) .	99-02	F67 (U59)	RH	9361859
	8-E7	9.665	SPEAKER, RDO FRT S/D (6" COAX) (AC-DELCO #9361869) .	99-02	F67 (U59)	LH	9361869
	8-E7	9.665	SPEAKER, RDO FRT S/D (0.6" DOME TWEETER) (AC-DELCO #16258231)	99-02	FP67 (X20)	RH	16258231

cardiagn.com

	8–E7	9.685	**SPEAKER**, RDO FRT S/D (0.6" DOME TWEETER) (AC–DELCO #16258221)	99–02	F67 (X20)	LH	16258221
6.		8.977	**SCREW**, LG RD HD TORX TAP M4.2X1.41X20 SS BL OX (RDO FRT S/D SPKR)	94–02	.....	6	16751144
7.		8.921	**NUT**, M4.2X1.4, 19.3X213.6.8.9 (RDO FRT S/D SPKR) (AC–DELCO #15650655)	94–02	.....	6	15650655
8.	8–E6	9.656	**CONNECTOR**, INLINE–TO RDO SPKR (GRAY) (2–WAY F W/LEADS) (INDEX TAB CTR CAVITY A&B) (2.535) (AC–DELCO #PT217)	94–02	F (UQ0)	2	12101625

RPO DEFINITIONS

UL8 – FREQUENCIES–SAUDI ARABIAN RADIO(EXPORT)
UQ0 – SPEAKER SYSTEM,4,DUAL FRONT DOOR MOUNTED,DUAL STANDARD RANGE PACKAGE SHELF/QUARTER
U59 – SPEAKER SYSTEM 8, QUAD FRT DR MTD, QUAD SAIL PNL, AMPLIFIER
U62 – SPEAKER SYSTEM,4,DUAL COAX FRONT,DUAL COAX PACKAGE SHELF
X20 – ENTERTAINMENT SYSTEM OPTION M

cardiagn.com

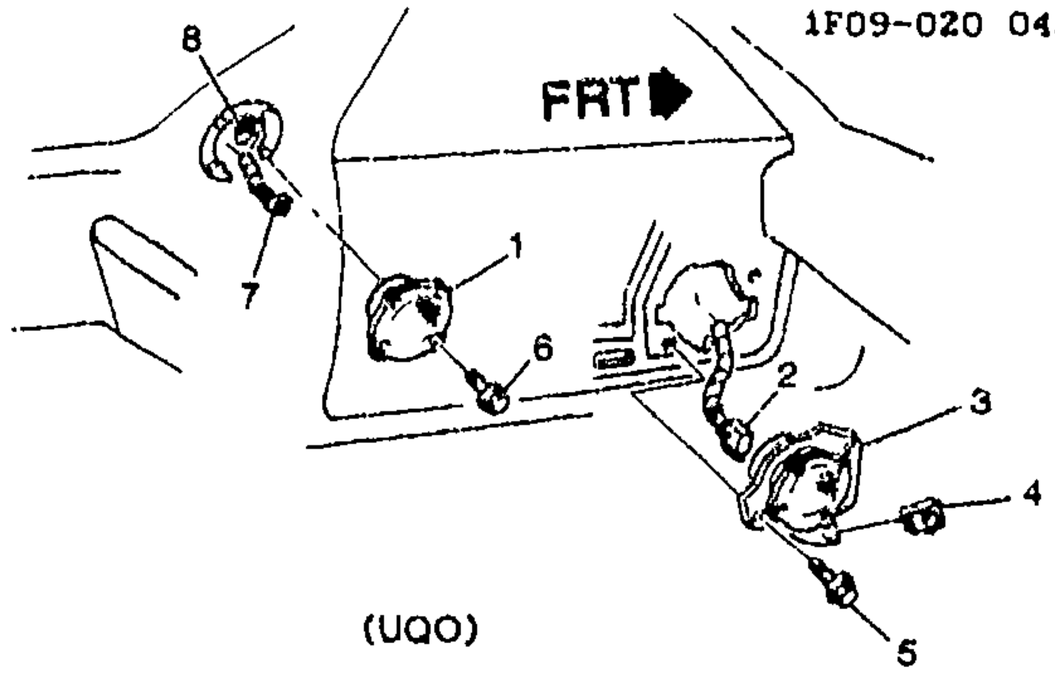

(UQO)

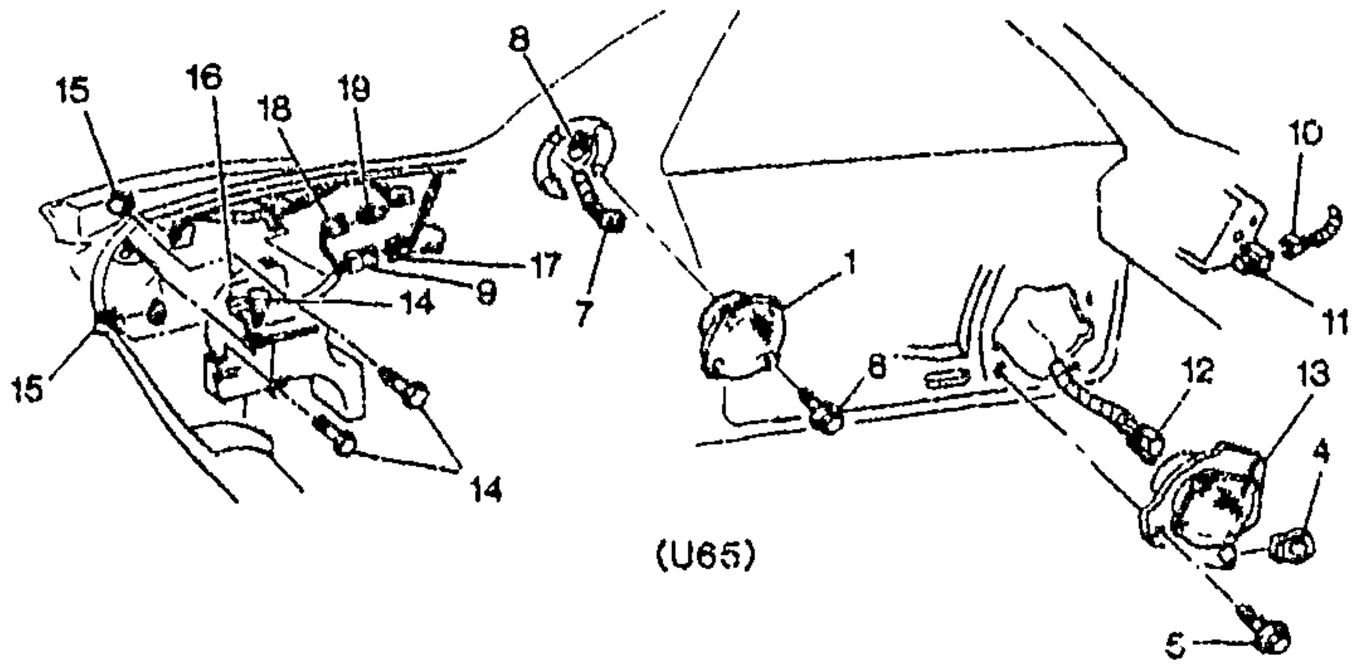

(U65)

1F09-020

1995-1996 F87 AUDIO SYSTEM

NOTE: FOR INFORMATION ON SPEAKER GRILLES SEE TRIM ILLUSTRATIONS IN GROUP 14.000.

1.	8-E7	9.665	**SPEAKER**, RDO QTR (AC-DELCO #16193541)	95-96	F (UQ0)	2	16193541
	8-E7	9.665	**SPEAKER**, RDO QTR (AC-DELCO #16215431)	95	F (UL8, U62)	2	16215431
	8-E7	9.665	**SPEAKER**, RDO QTR (AC-DELCO #16215431)	96	F87 (U62)	2	16215431
2.	8-E6	9.656	**CONNECTOR**, SPKR-RDO (GRAY) (2-WAY F W/LEADS) (INDEX TAB CTR CAVITY A&B) (2.535) (AC-DELCO #PT217) ...	95-96	F (UQ0)	2	12101825
3.	8-E7	9.665	**SPEAKER**, RDO FRT S/D (INCLS 4) (6" COAX) (AC-DELCO #9361919)	95-96	F (U62)	RH	9361919
	8-E7	9.665	**SPEAKER**, RDO FRT S/D (INCLS 4) (AC-DELCO #9361929)	95-96	F (U62)	LH	9361929
	8-E7	9.665	**SPEAKER**, RDO FRT S/D (INCLS 4) (AC-DELCO #16194961) ...	95-96	F87 (UL8, U62)	RH	16194961
	8-E7	9.665	**SPEAKER**, RDO FRT S/D (INCLS 4) (AC-DELCO #9361839)	95-96	FP87 (UQ0)	RH	9361839
	8-E7	9.665	**SPEAKER**, RDO FRT S/D (INCLS 4) (AC-DELCO #9361849)	95-96	FP87 (UQ0)	LH	9361849

cardiagn.com

							1F09-020
	8-E7	9.665	**SPEAKER**, RDO FRT S/D (INCLS 4) (6" COAX) (AC-DELCO #9361919)	95	F87 (UL8, U62) (EXPORT)	RH	9361919
	8-E7	9.665	**SPEAKER**, RDO FRT S/D (INCLS 4) (AC-DELCO #9361929)	95	F87 (UL8, U62) (EXPORT)	LH	9361929
4.		8.921	**NUT**, U-TYPE, 4.2X1.41, DIM A-15, DIM B-14 DIM C-8.65, 1050, PZOR (FRT S/D SPKR) (PART OF 3)	95-96	.....	6	12J38121
5.		8.977	**SCREW**, LG RD HD TORX TAP M4.2X1.41X20 SS BL OX (RDO FRT S/D SPKR)	95-96	.....	6	16751144
6.		8.977	**BOLT**, HWH M4.2X1.41X25 PZOR TAP 17 OD (RDO RR SPKR)	95-96	.....	8	11508233
7.	8-E6	9.656	**CONNECTOR**, SPKR-RDO (GRAY) (2-WAY F W/LEADS) (INDEX TAB CTR CAVITY A&B) (2.535) (AC-DELCO #PT217) ..	95-96	F (UQ0)	2	12101825
8.		8.921	**NUT**, SPG U-SHAPED, M4.2X1.41, 17 LGTH, 13 WIDTH, POR, 1065 (RDO RR SPKR)	95-96	.....	8	11513715
9.	8-E2	9.650	**CONNECTOR**, AMPF-RDO SPKR (10-WAY F W/LEADS) (2.535) (AC-DELCO #PT150) ...	95-96	F	1	12101762
10.	8-E2	9.650	**CONNECTOR**, RDO SPKR AMPF RLY (BLACK) (6-WAY F) (W/O LEADS) (3.900)	95-96	F	1	12110541
11.	8-E2	9.650	**RELAY**, RDO (BLACK) (5-WAY M) (USED W/CONNECTOR 15306045) (W/OUT BRKTS) (9.277) (AC-DELCO #15-8719)	95-96	F87	1	12193601
12.	8-E6	9.656	**CONNECTOR**, SPKR-RDO (6-WAY F) (W/LEADS) (2.535) (AC-DELCO #PT246)	95-96	F	2	12101854
13.	8-E7	9.665	**SPEAKER**, RDO FRT S/D (6" COAX) (AC-DELCO #9361919) .	95-96	F (U62)	RH	9361919
	8-E7	9.665	**SPEAKER**, RDO FRT S/D (AC-DELCO #9361929)	95-96	F (U62)	LH	9361929
	8-E7	9.665	**SPEAKER**, RDO FRT S/D (AC-DELCO #16194961)	95-96	F87 (UL8, U62)	RH	16194961
	8-E7	9.665	**SPEAKER**, RDO FRT S/D (AC-DELCO #16196771)	95-96	F87 (U65)	LH	16196771
	8-E7	9.665	**SPEAKER**, RDO FRT S/D (AC-DELCO #16196791)	95-96	F87 (U65)	RH	16196791
	8-E7	9.665	**SPEAKER**, RDO FRT S/D (6" COAX) (AC-DELCO #9361919) .	95	F87 (UL8, U62) (EXPORT)	RH	9361919
	8-E7	9.665	**SPEAKER**, RDO FRT S/D (AC-DELCO #9361929)	95	F87 (UL8, U62) (EXPORT)	LH	9361929
14.		8.977	**SCREW**, 6.3X1.81X20 (RDO RR SPKR)	95-96	F	3	11509051
15.		8.921	**NUT-U SHAPE (M6X1**, 1060 PEOR) MULIT-THREAD SPRING (RDO RR SPKR)	95-96	F	2	11518121
16.	8-E7	9.665	**SPEAKER**, RDO RR (AC-DELCO #16196781)	95-96	F87 (U65)	1	16196781
17.	8-E2	9.650	**CONNECTOR**, AMPF-RDO SPKR (10-WAY M W/LEADS) (2.535) (AC-DELCO #PT215) . .	95-96	F (U65)	1	12101823

cardiagn.com

							1F09-020
18.	8-E2	9.650	CONNECTOR, AMPF-RDO SPKR (2-WAY F W/O LEADS) (2.815)	95-96	F (U65)	1	12129081
19.	8-E2	9.650	CONNECTOR, AMPF-RDO SPKR (2-WAY M) (2.815)	95-96	F (U65)	1	12129155

RPO DEFINITIONS

UL6 – FREQUENCIES-SAUDI ARABIAN RADIO(EXPORT)
UQ0 – SPEAKER SYSTEM,4,DUAL FRONT DOOR MOUNTED,DUAL STANDARD RANGE PACKAGE SHELF/QUARTER
U62 – SPEAKER SYSTEM,4,DUAL COAX FRONT,DUAL COAX PACKAGE SHELF
U65 – SPEAKER SYSTEM,5,DUAL FRT DR MTD,DUAL EXT RANGE SAIL PANEL,SINGLE RR COMPARTMENT

cardiagn.com

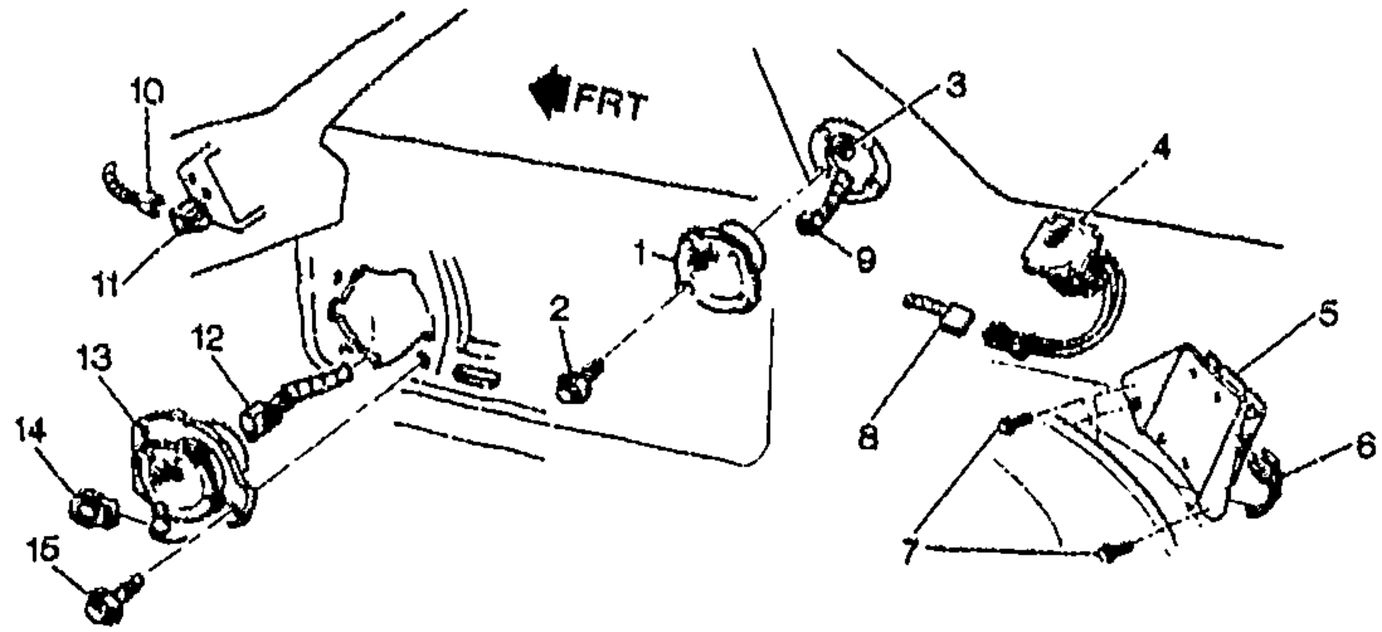

1F09-021

1997-2002 F87 AUDIO SYSTEM

NOTE: FOR INFORMATION ON SPEAKER GRILLES SEE TRIM ILLUSTRATIONS IN GROUP 14.000.

1.	8-E7	9.665	**SPEAKER**, RDO QTR (AC-DELCO #16193541)	97-02	F87 (UQ0)	2	16193541
	8-E7	9.665	**SPEAKER**, RDO QTR (6"RD SVC S/W SAIL PNL) (AC-DELCO #16235651)	97-02	F87 (UZ7)	2	16235651
2.		8.977	**BOLT**, HWH M4.2X1.41X25 PZOR TAP 17 OD (RDO QTR SPKR)	97-02	.....	8	11508233
3.		8.921	**NUT**, SPG U-SHAPED, M4.2X1.41, 17 LGTH, 13 WIDTH, POR, 1065 (RDO QTR SPKR)	97-02	.....	8	11513715
4.	8-E7	9.665	**SPEAKER**, RDO R/Q TR PNL (4"RD ERS RR TRIM) (AC-DELCO #16217731)	97-02	F87 (UZ7)	2	16217731
5.	8-E2	9.650	**AMPLIFIER**, LOW FREQ AUDIO (AC-DELCO #16218081)	97	F87 (UZ7)	1	16218081
	8-E2	9.650	**AMPLIFIER**, LOW FREQ AUDIO (AC-DELCO #16257161)	98-02	F87 (UZ7)	1	16257161
6.	8-E2	9.650	**CONNECTOR**, AMPF-RDO SPKR (BLUE) (32-WAY F W/O LEADS) (2.530)	97-02	F	1	12110115
7.		8.977	**SCREW**, HWH TAP M8X2.12X20 17.2-OD AB PTPOR (LOW FREQ AUDIO AMPF)	97-02	F	2	11509189
8.	8-E6	9.656	**CONNECTOR**, SPKR-RDO (BLACK) (4-WAY F W/LEADS) (2.535) (AC-DELCO #PT1232) ..	97-02	F	4	12085208
9.	8-E6	9.656	**CONNECTOR**, SPKR-RDO (GRAY) (2-WAY F W/LEADS) (INDEX TAB CTR CAVITY A&B) (2.535) (AC-DELCO #PT217) ...	97-02	F	2	12101825
10.	8-E2	9.650	**CONNECTOR**, RDO SPKR AMPF RLY (BLACK) (6-WAY F) (W/O LEADS) (3.900)	97-02	F	1	12110541

cardiagn.com

							1F09-021
11.	8-E2	9.650	**RELAY**, RDO (BLACK) (5-WAY M) (USED W/CONNECTOR 15306045) (W/OUT BRKTS) (9.277) (AC-DELCO #15-8719)	97	F87	1	12193601
12.	8-E6	9.656	**CONNECTOR**, SPKR-RDO (6-WAY F) (W/LEADS) (2.535) (AC-DELCO #PT246)	97-02	F	2	12101854
13.	8-E7	9.665	**SPEAKER**, RDO FRT S/D (INCLS 14) (6" COAX) (AC-DELCO #9361919)	97-99	F (U62)	RH	9361919
	8-E7	9.665	**SPEAKER**, RDO FRT S/D (INCLS 14) (AC-DELCO #9361929)	97-99	F (U62)	LH	9361929
	8-E7	9.665	**SPEAKER**, RDO FRT S/D (INCLS 14) (AC-DELCO #9361839)	97-98	FP87 (UQ0)	RH	9361839
	8-E7	9.665	**SPEAKER**, RDO FRT S/D (INCLS 14) (AC-DELCO #9361849)	97-98	FP87 (UQ0)	LH	9361849
	8-E7	9.665	**SPEAKER**, RDO FRT S/D (INCLS 14) (AC-DELCO #16194961) ...	97-98	F (U62)	RH	16194961
	8-E7	9.665	**SPEAKER**, RDO FRT S/D (INCLS 14) (6" COAX) (AC-DELCO #9361859)	97-02	F87 (UZ7)	RH	9361859
	8-E7	9.665	**SPEAKER**, RDO FRT S/D (INCLS 14) (6" COAX) (AC-DELCO #9361869)	97-02	F87 (UZ7)	LH	9361869
	8-E7	9.665	**SPEAKER**, RDO FRT S/D (INCLS 14) (AC-DELCO #9361839)	99-02	F87 (UQ0)	RH	9361839
	8-E7	9.665	**SPEAKER**, RDO FRT S/D (INCLS 14) (AC-DELCO #9361849)	99-02	F87 (UQ0)	LH	9361849
	8-E7	9.665	**SPEAKER**, RDO FRT S/D (INCLS 14) (0.6" DOME TWEETER) (AC-DELCO #16258231)	99-02	FP67 (X20)	RH	16258231
14.		8.921	**NUT**, U-TYPE, 4.2X1.41, DIM A-15, DIM B-14 DIM C-8.65, 1050, PZOR (FRT S/D SPKR) (PART OF 13)	97-02	.....	6	12338121
15.		8.977	**SCREW**, LG RD HD TORX TAP M4.2X1.41X20 SS BLOX (RDO FRT S/D SPKR)	97-02	.....	6	16751144

RPO DEFINITIONS

UQ0 – SPEAKER SYSTEM,4,DUAL FRONT DOOR MOUNTED,DUAL STANDARD RANGE PACKAGE SHELF/QUARTER
UZ7 – SPEAKER SYSTEM 8, QUAD FRT DR MTD, DUAL SAIL PNL, DUAL RR HATCH, AMPLIFIER
U62 – SPEAKER SYSTEM,4,DUAL COAX FRONT,DUAL COAX PACKAGE SHELF
X20 – ENTERTAINMENT SYSTEM OPTION M

cardiagn.com

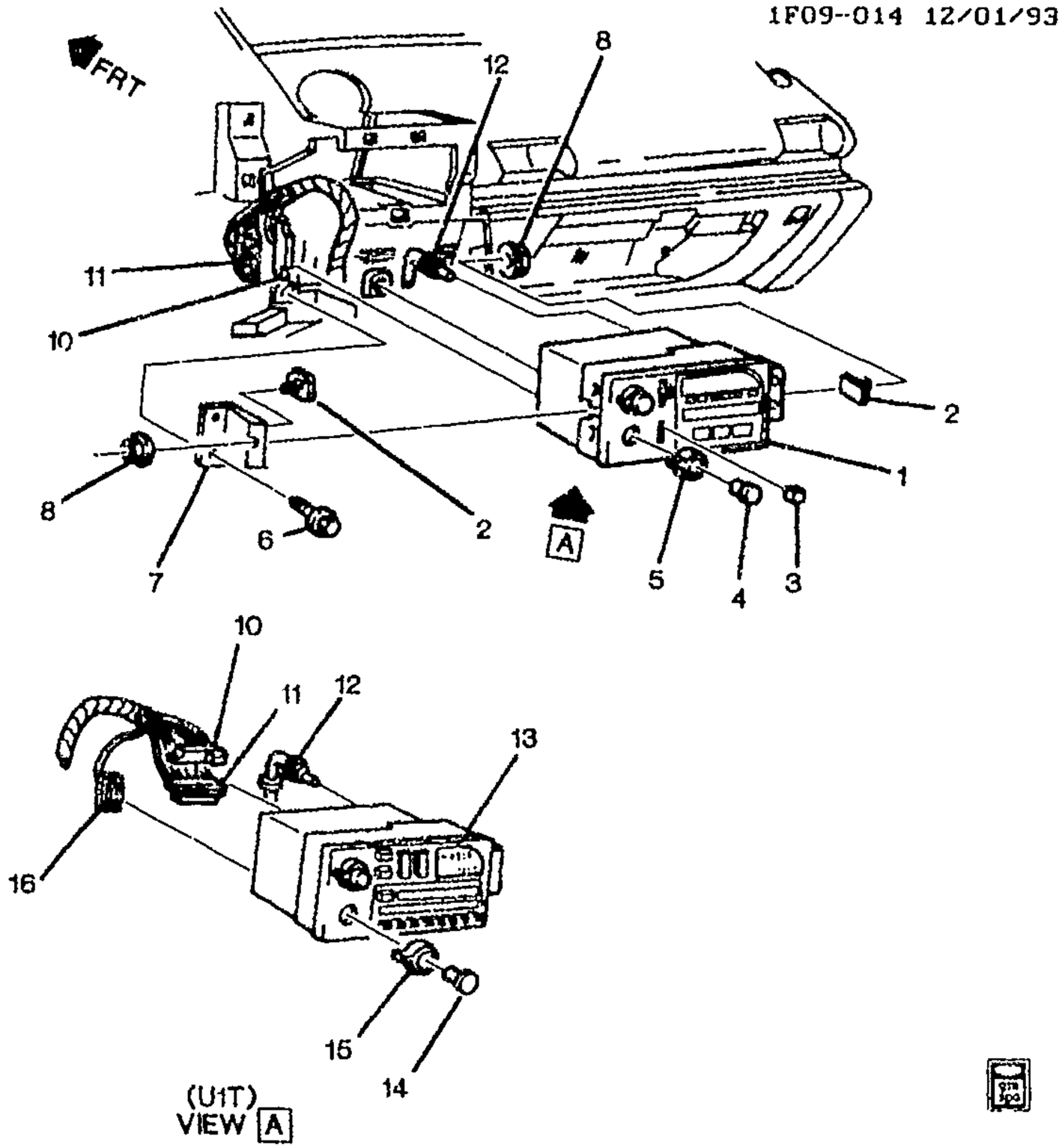

1F09-014

1993-1996 F RADIO ASM & MOUNTING

1.		N.S.	RADIO, AM/FM STEREO & CLK & T/PLYR (INCLS 3-5)	93-96	.....		
		N.S.	RADIO, AM/FM STEREO & CLK & CD PLYR (INCLS 3, 4, 5)	93-96	.....		
		N.S.	RADIO PKG, (INCLS 3, 4, 5) (AVAILABLE ONLY THROUGH A/C DELCO SERVICE CENTERS)	93	.....		
		N.S.	RADIO, (REMAN) (AVAILABLE THROUGH AC DELCO SERVICE CENTERS)		.....		
2.	8-E10	9.667	BOLT, RDO (M5X.8X16 THD) (SPECIAL) (3.671) (AC-DELCO #12337892)	93-96	F	2	12337892
3.	8-D26	9.649	KNOB, RDO TONE CONT (PART OF 1) (AC-DELCO #16173847) .	93-96	F (UN6, UU8)	2	16173847
4.	8-D26	9.649	KNOB, RDO VOL CONT (PART OF 1) (AC-DELCO #16144001) .	93	F	2	16144001
	8-D26	9.649	KNOB, RDO VOL CONT (PART	94-96	F	2	16184719

cardiagn.com

	8-D26	9.649	**KNOB**, RDO TUNING CONT (PART OF 1) (AC-DELCO #16144001)	93	F	2	16144001
	8-D26	9.649	**KNOB**, RDO TUNING CONT (PART OF 1) (AC-DELCO #16184719)	94-96	F	2	16184719
5.	8-D26	9.649	**KNOB**, RDO SPKR CONT (PART OF 1) (BAL) (AC-DELCO #16165154)	93-96	F	2	16165154
6.		6.900	**BOLT/SCREW**, HWH W/FL WA M4.2X1.41X20, 6010M, 7253M, 12.5 OD, DOG PT (RDO BRKT) (8.977)	93-96		2	11509709
7.	8-E10	9.667	**BRACKET**, RDO (AC-DELCO #10098531)	93-96	F	1	10098531
8.		8.917	**NUT**, HEX FLG M5X0.8 GRD 9 ZP (RDO BRKT)	93-96		2	11514252
10.	8-E6	9.656	**CONNECTOR**, SPKR-RDO (BLUE) (4-WAY F) (W/LEADS) (2.535)	93-95	F	1	12102663
	8-E6	9.656	**CONNECTOR**, SPKR-RDO (6-WAY F) (W/LEADS) (2.535) (AC-DELCO #PT246)	94-96	F	2	12101854
	8-E6	9.656	**CONNECTOR**, SPKR-RDO (FRT & RR) (GRAY) (2-WAY F W/LEADS) (INDEX TAB CTR CAVITY A&B) (2.535) (AC-DELCO #PT217)	93-96	F	AR	12101825
11.	8-E6	9.656	**CONNECTOR**, RDO (BLACK) (10-WAY F) (W/LEADS) (2.535) (AC-DELCO #PT108)	93-96	F	1	12085486
	8-E6	9.656	**CONNECTOR**, RDO (BLACK) (7-WAY F, W/LEADS) (2.535) (AC-DELCO #PT406)	93-96	F	1	12102778
	8-E6	9.656	**CONNECTOR**, RDO (BLUE) (4-WAY F) (W/LEADS) (2.535)	94-96	F	1	12102663
	8-E6	9.656	**CONNECTOR**, RDO (BLACK) (9-WAY F, W/LEADS) (9.650) (AC-DELCO #PT316)	95-96	F	1	12102629
12.	8-D24	9.647	**CABLE**, RDO ANT (4670MM) (AC-DELCO #12103391)	93-94	F	1	12103391
	8-D24	9.647	**CABLE**, RDO ANT (4670MM) (AC-DELCO #12103391)	95	F67	1	12103391
	8-D24	9.647	**CABLE**, RDO ANT (4485MM) (AC-DELCO #12124115)	95-96	F87	1	12124115
	8-D24	9.647	**CABLE**, RDO ANT (AC-DELCO #12162904)	96	F67	1	12162904
13.	8-E2	9.650	**RADIO**, AM/FM STEREO & CLK & CD PLYR (INCLS 14, 15) (AC-DELCO #16175961)	94	F (U1T) (EXC UK1)	1	16175961
		DISCON	**RADIO**, AM/FM STEREO & CLK & CD PLYR (INCLS 14, 15)	94	F67 (U1C) (EXC UK1)	1	16181181
	8-E2	9.650	**RADIO**, AM/FM STEREO & CLK & CD PLYR (INCLS 14, 15) (AC-DELCO #16175961)	95-96	F (U1T) (EXC UK1, UL8)	1	16175961
		DISCON	**RADIO**, AM/FM STEREO & CLK & CD PLYR (INCLS 14, 15)	95	F67 (U1C) (EXC UK1, UL8)	1	16181181

cardiagn.com

		N.S.	RADIO, (REMAN) (AVAILABLE THROUGH AC DELCO SERVICE CENTERS)	94-96	.....		
	8-E2	9.650	RADIO, AM/FM STEREO & CLK & CD PLYR (INCLS 14, 15) (AC-DELCO #16175951)	94	F87 (UK1, U1T) (EXPORT)	1	16175951
14.	8-D26	9.649	KNOB, RDO VOL CONT (PART OF 13) (AC-DELCO #16144001)	93	F	2	16144001
	8-D26	9.649	KNOB, RDO VOL CONT (PART OF 13) (AC-DELCO #16184719)	94-96	F	2	16184719
	8-D26	9.649	KNOB, RDO TUNING CONT (PART OF 13) (AC-DELCO #16144001)	93	F	2	16144001
	8-D26	9.649	KNOB, RDO TUNING CONT (PART OF 13) (AC-DELCO #16184719)	94-96	F	2	16184719
15.	8-D26	9.649	KNOB, RDO SPKR CONT (PART OF 13) (BAL) (AC-DELCO #16165154)	93-96	F	2	16165154
16.	8-E6	9.656	CONNECTOR, RDO (BLACK) (10-WAY F) (W/LEADS) (2.535) (AC-DELCO #PT108)	93-96	F	1	12085486
	8-E6	9.656	CONNECTOR, RDO (BLACK) (7-WAY F, W/LEADS) (2.535) (AC-DELCO #PT406)	93-96	F	1	12102778
	8-E6	9.656	CONNECTOR, RDO (BLUE) (4-WAY F) (W/LEADS) (2.535) ...	94-96	F	1	12102663
	8-E6	9.656	CONNECTOR, RDO (BLACK) (9-WAY F, W/LEADS) (9.650) (AC-DELCO #PT316)	95-96	F	1	12102629

RPO DEFINITIONS

UK1 – RADIO FREQUENCY(JAPANESE)
UL8 – FREQUENCIES-SAUDI ARABIAN RADIO(EXPORT)
UN6 – RADIO,AM/FM STEREO,CASSETTE,ETR,INCLUDES CLOCK
UU8 – RADIO,AM/FM STEREO,CASSETTE,ETR,DELCO/BOSE,DOLBY,INCLUDES CLOCK
U1C – RADIO,AM/FM STEREO,C.D. PLAYER,ETR,INCLUDES CLOCK
U1T – RADIO AM/FM STEREO, SEEK/SCAN, COMPACT DISC, HPS, CLOCK, ETR

cardiagn.com

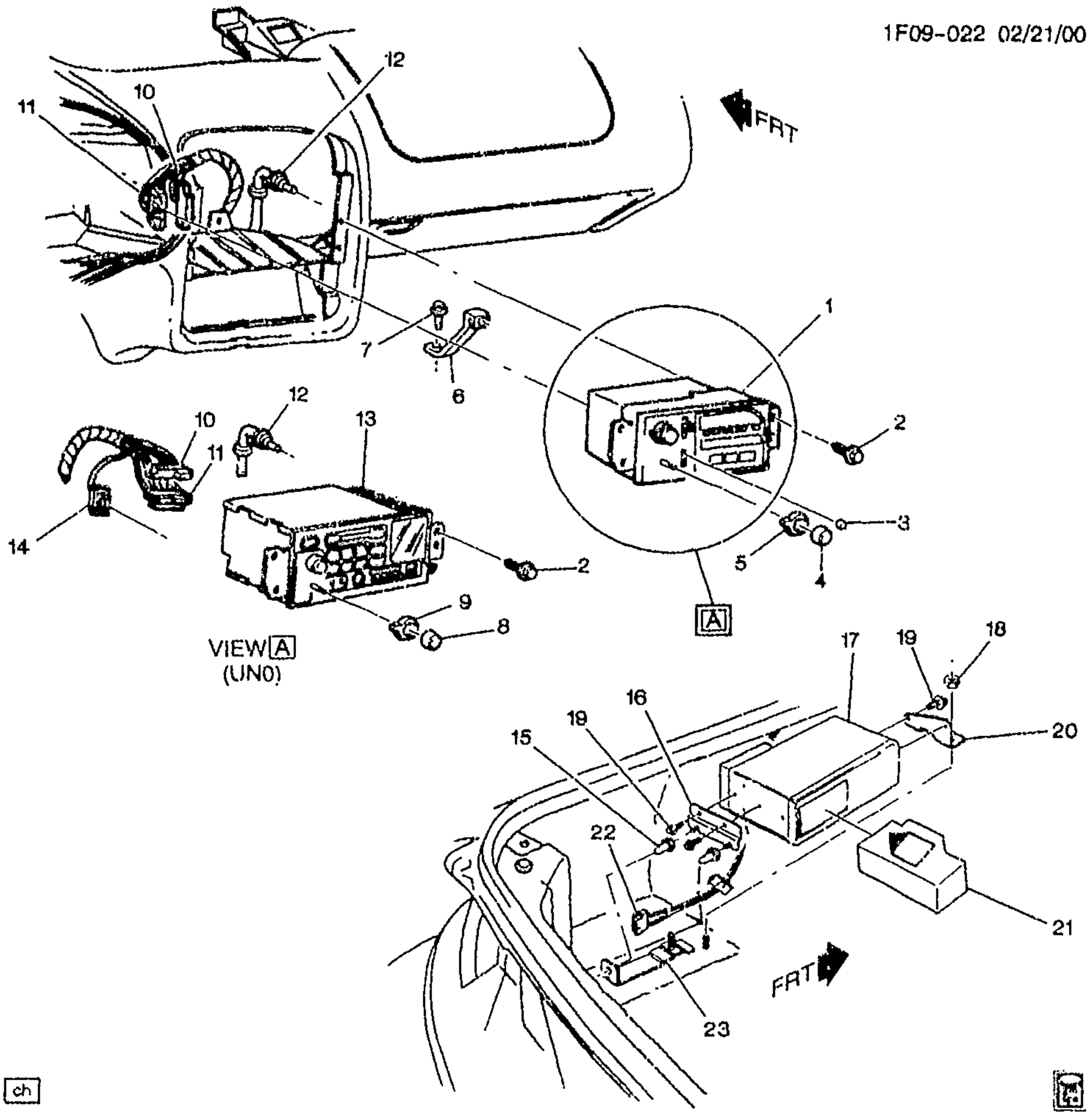

ch

1F09-022

1997-2002 F RADIO ASM & MOUNTING

1.	8-E2	9.650	RADIO, AM/FM STEREO & CLK & T/PLYR (INCLS 3-5) (AC-DELCO #16232091)	97 F (UL0) (EXC UK1, UL8)	1	16232091
	8-E2	9.650	RADIO, AM/FM STEREO & CLK & T/PLYR (INCLS 3-5) (AC-DELCO #16232091)	98 F (UL0, U62) (EXC UK1, UL8)	1	16232091
	8-E2	9.650	RADIO, AM/FM STEREO & CLK & T/PLYR (INCLS 3-5) (AC-DELCO #16255311)	98 F (UL0, UZ7) (EXC UK1, UL8)	1	16255311

cardiagn.com

	8-E2	9.650	RADIO, AM/FM STEREO & CLK & T/PLYR (INCLS 3-5) (STAMPED BKRM, CLRM) (AC-DELCO #9356045)	97-99	F (UM6)	1	9356045
	8-E2	9.650	RADIO, AM/FM STEREO & CLK & T/PLYR (INCLS 3-5) (BXYH CRMA) (AC-DELCO #15766826)	97-99	F (UM6)	1	15766826
	8-E2	9.650	RADIO, AM/FM STEREO & CLK & T/PLYR (INCLS 3-5) (AC-DELCO #16255311)	99	F (UL0, UZ7, U59) (EXC UK1, UL8)	1	16255311
	8-E2	9.650	RADIO, AM/FM STEREO & CLK & T/PLYR (INCLS 3-5) (AC-DELCO #9356201)	00-02	F (UL2, UW3)	1	9356201
	8-E2	9.650	RADIO, AM/FM STEREO & CLK & T/PLYR (INCLS 3-5) (AC-DELCO #9383791)	00-02	F (UL0, UL8)	1	9383791
	8-E2	9.650	RADIO, AM/FM STEREO & CLK & T/PLYR (INCLS 3-5) (AC-DELCO #10306066)	00-02	F (UL0, UZ7, U59) (EXC UK1, UL8)	1	10306066
	8-E2	9.650	RADIO, AM/FM STEREO & CLK & T/PLYR (INCLS 3-5) (AC-DELCO #16255365)	00	F87 (UM6)	1	16255365
	8-E2	9.650	RADIO, AM/FM STEREO & CLK & T/PLYR (INCLS 3-5) (AC-DELCO #10312736)	01-02	FP87 (UM6)	1	10312736
	8-E2	9.650	RADIO, AM/FM STEREO & CLK & T/PLYR (INCLS 3-5) (AC-DELCO #9383791)	97-99	F (UL0, UL8) (EXPORT)	1	9383791
	8-E2	9.650	RADIO, AM/FM STEREO & CLK & T/PLYR (INCLS 3-5) (AC-DELCO #16213831)	97	FP67 (UK1, UL0, U62) (EXPORT)	1	16213831
	8-E2	9.650	RADIO, AM/FM STEREO & CLK & T/PLYR (INCLS 3-5) (AC-DELCO #16213831)	97	FP87 (UK1, UL0, UZ7) (EXPORT)	1	16213831
	8-E2	9.650	RADIO, AM/FM STEREO & CLK & T/PLYR (INCLS 3-5) (AC-DELCO #9356201)	98-99	F (UL2, UW3) (EXPORT)	1	9356201
	8-E2	9.650	RADIO, AM/FM STEREO & CLK & T/PLYR (INCLS 3-5) (AC-DELCO #16232111)	98-99	F (UK1, UL0) (EXPORT)	1	16232111
	8-E2	9.650	RADIO, AM/FM STEREO & CLK & T/PLYR (INCLS 3-5) (AC-DELCO #10306069)	00-02	F (UK1, UL0) (EXPORT)	1	10306069
2.		8.900	BOLT/SCREW, HWH W/FL WA M4.2X1.41X20, 6010M, 7253M, 12.5 OD, DOG PT (RDO BRKT) (8.977)	97-02	.....	2	11509709
3.	8-D26	9.649	KNOB, RDO TONE CONT (PART OF 1) (AC-DELCO #16181834) .	97-02	F (UM6)	2	16181834
4.	8-D26	9.649	KNOB, RDO VOL CONT (PART OF 1) (AC-DELCO #16199583) .	97-99	F (UM6)	1	16199583
	8-D26	9.649	KNOB, RDO VOL CONT (PART OF 1) (WING) (SPD CONT VOL) (AC-DELCO #16189159)	98	F67 (UL0, U62)	1	16189159
	8-D26	9.649	KNOB, RDO VOL CONT (PART OF 1) (WING) (SPD CONT VOL) (AC-DELCO #16189159)	00-02	F (UL0, UL8)	1	16189159

cardiagn.com

	8-D26	9.649	KNOB, RDO VOL CONT (PART OF 1) (AC-DELCO #16195410) .	00-02	F (UL0, UL8)	1	16195410
	8-D26	9.649	KNOB, RDO VOL CONT (PART OF 1) (WING) (SPD CONT VOL) (AC-DELCO #16189159)	00-02	F87 (UK1, UL0)	1	16189159
	8-D26	9.649	KNOB, RDO VOL CONT (PART OF 1) (AC-DELCO #16199583) .	00	F87 (UM6)	1	16199583
5.	8-D26	9.649	KNOB, RDO SPKR CONT (PART OF 1) (AC-DELCO #16181821) .	00	F87 (UM6)	1	16181821
	8-D26	9.649	KNOB, RDO SPKR CONT (PART OF 1) (AC-DELCO #16181831) .	00	F87 (UM6)	1	16181831
	8-D26	9.649	KNOB, RDO SPKR CONT (BAL) (PART OF 1) (AC-DELCO #16181831)	97-99	F (UM6)	1	16181831
	8-D26	9.649	KNOB, RDO SPKR CONT (FADER) (PART OF 1) (AC-DELCO #16181821)	97-99	F (UM6)	1	16181821
	8-D26	9.649	KNOB, RDO SPKR CONT (PART OF 1) (AC-DELCO #16235769) .	98	F (UL2, UW3) (EXPORT)	2	16235769
	8-D26	9.649	KNOB, RDO SPKR CONT (PART OF 1) (AC-DELCO #16235769) .	00-02	F (UL2, UW3) (EXPORT)	2	16235769
6.	8-E10	9.667	BRACKET, RDO RR (AC-DELCO #10239167)	97	F (UN0)	1	10239167
	8-E10	9.667	BRACKET, RDO RR (CD STIFFENING BRACKET) (AC-DELCO #10239167)	98-02	F	1	10239167
7.		8.977	SCREW, HWH TAP M4.2X1.41X10, 9.2-OD 6010PZOR BLK (RDO BRKT)	97-02	F	1	11509501
8.	8-D26	9.649	KNOB, RDO VOL CONT (PART OF 13) (WING) (SPD CONT VOL) (AC-DELCO #16189159)	97	F67 (UN0, UL0, U62) ..	1	16189159
	8-D26	9.649	KNOB, RDO VOL CONT (PART OF 13) (AC-DELCO #16195410)	97	F67 (UN0, UL0)	1	16195410
	8-D26	9.649	KNOB, RDO VOL CONT (PART OF 13) (WING) (SPD CONT VOL) (AC-DELCO #16189159)	97	F87 (UN0, UL0, UZ7) ..	1	16189159
	8-D26	9.649	KNOB, RDO VOL CONT (PART OF 13) (AC-DELCO #16195410)	97	F87 (UN0, UL0, UZ7) ..	1	16195410
	8-D26	9.649	KNOB, RDO VOL CONT (PART OF 13) (WING) (SPD CONT VOL) (AC-DELCO #16189159)	98	F67 (UL0, U62)	1	16189159
	8-D26	9.649	KNOB, RDO VOL CONT (PART OF 13) (AC-DELCO #16195410)	98	F67 (UL0, UN0, U62) ..	1	16195410
	8-D26	9.649	KNOB, RDO VOL CONT (PART OF 13) (WING) (SPD CONT VOL) (AC-DELCO #16189159)	98	F87 (UL0, UN0, UZ7) ..	1	16189159
	8-D26	9.649	KNOB, RDO VOL CONT (PART OF 13) (AC-DELCO #16195410)	98-02	F87 (UL0, UN0, UZ7) ..	1	16195410
	8-D26	9.649	KNOB, RDO VOL CONT (PART OF 13) (WING) (SPD CONT VOL) (AC-DELCO #16189159)	99-02	F (UL0, UN0, UZ7)	1	16189159
	8-D26	9.649	KNOB, RDO VOL CONT (PART OF 13) (WING) (SPD CONT VOL) (AC-DELCO #16189159)	99-02	F67 (UL0, UN0, U59) ..	1	16189159
	8-D26	9.649	KNOB, RDO VOL CONT (PART OF 13) (AC-DELCO #16195410)	99-02	F67 (UL0, UN0, U59) ..	1	16195410

cardiagn.com

9.	8-D26	9.649	**KNOB**, RDO SPKR CONT (PART OF 13) (AC-DELCO #16195412)	97	F67 (UL0, UN0)	2	16195412
	8-D26	9.649	**KNOB**, RDO SPKR CONT (PART OF 13) (AC-DELCO #16195412)	97	F87 (UL0, UN0, UZ7) ..	2	16195412
	8-D26	9.649	**KNOB**, RDO SPKR CONT (PART OF 13) (AC-DELCO #16195412)	98	F (UL0, UN0, UZ7) (EXC UL8)	2	16195412
	8-D26	9.649	**KNOB**, RDO SPKR CONT (PART OF 13) (AC-DELCO #16195412)	99	F (UL0, UN0, UZ7, U59) (EXC UL8)	2	16195412
	8-D26	9.649	**KNOB**, RDO SPKR CONT (PART OF 13) (AC-DELCO #16195412)	00-02	F (UN0, UZ7, U59) (EXC UK1, UL8)	2	16195412
10.	8-E6	9.656	**CONNECTOR**, SPKR-RDO (6-WAY F) (W/LEADS) (2.535) (AC-DELCO #PT246)	97	F	2	12101854
	8-E6	9.656	**CONNECTOR**, SPKR-RDO (BLACK) (4-WAY F W/LEADS) (2.535) (AC-DELCO #PT1232) ..	97-02	F	2	12085208
	8-E6	9.656	**CONNECTOR**, SPKR-RDO (FRT & RR) (GRAY) (2-WAY F W/LEADS) (INDEX TAB CTR CAVITY A&B) (2.535) (AC-DELCO #PT217)	97-02	F	AR	12101825
11.	8-E6	9.656	**CONNECTOR**, RDO (BLACK) (10-WAY F) (W/LEADS) (2.535) (AC-DELCO #PT108)	97-02	F	1	12085486
	8-E6	9.656	**CONNECTOR**, RDO (BLACK) (7-WAY F, W/LEADS) (2.535) (AC-DELCO #PT406)	97	F	1	12102778
	8-E6	9.656	**CONNECTOR**, RDO (BLUE) (4-WAY F) (W/LEADS) (2.535) ...	97	F	1	12102663
	8-E6	9.656	**CONNECTOR**, RDO (BLACK) (9-WAY F, W/LEADS) (9.650) (AC-DELCO #PT316)	97-02	F	1	12102629
	8-E6	9.656	**CONNECTOR**, RDO (WHITE) (10-WAY F) (W/LEADS) (AC-DELCO #PT582)	98-02	F	1	12125670
12.	8-D24	9.647	**CABLE**, RDO ANT (AC-DELCO #12162904)	97	F67 (EXC ETA)	1	12162904
	8-D24	9.647	**CABLE**, RDO ANT (AC-DELCO #12186450)	97-98	F67 (ETA)	1	12186450
	8-D24	9.647	**CABLE**, RDO ANT (AC-DELCO #12186133)	97	F87 (W52, W53, W54, W55, W56)	1	12186133
	8-D24	9.647	**CABLE**, RDO ANT (AC-DELCO #12186133)	98-02	F87	1	12186133
	8-D24	9.647	**CABLE**, RDO ANT (AC-DELCO #12186450)	99-02	F67	1	12186450
13.	8-E2	9.650	**RADIO**, AM/FM STEREO & CLK & CD PLYR (INCLS 8, 9) (AC-DELCO #10306067)	98	F (UN0, UZ7) (EXC UK1, UL8)	1	10306067
	8-E2	9.650	**RADIO**, AM/FM STEREO & CLK & CD PLYR (INCLS 8, 9) (AC-DELCO #10306067)	99	F (UN0, UZ7, U59) (EXC UK1, UL8)	1	10306067
	8-E2	9.650	**RADIO**, AM/FM STEREO & CLK & CD PLYR (INCLS 8, 9)	01-02	F87 (UN0, UQ0) (EXC UK1, UL8)	1	10300770
	8-E2	9.650	**RADIO**, AM/FM STEREO & CLK & CD PLYR (MONSOON CD) (INCLS 8, 9) (AC-DELCO #10306067)	00-02	F (UN0, UZ7, U59) (EXC UK1, UL8)	1	10306067

cardiagn.com

							1F09-022
14.	8-E6	9.656	**CONNECTOR**, RDO (BLACK) (10-WAY F) (W/LEADS) (2.535) (AC-DELCO #PT108)	97-02	F	1	12085486
	8-E6	9.656	**CONNECTOR**, RDO (BLACK) (7-WAY F, W/LEADS) (2.535) (AC-DELCO #PT406)	97	F	1	12102773
	8-E6	9.656	**CONNECTOR**, RDO (BLUE) (4-WAY F) (W/LEADS) (2.535) ...	97	F	1	12102663
	8-E6	9.656	**CONNECTOR**, RDO (BLACK) (9-WAY F, W/LEADS) (9.650) (AC-DELCO #PT316)	97-02	F	1	12102629
	8-E6	9.656	**CONNECTOR**, RDO (WHITE) (10-WAY F) (W/LEADS) (AC-DELCO #PT582)	98-02	F	1	12125670
15.	8-E10	9.667	**NUT**, AUDIO DISC PLYR BRKT (OVERALL LENGTH 1.25") (3.671) (AC-DELCO #10027015)	97-02	F (U1S)	2	10027015
16.	8-E10	9.667	**BRACKET**, CD/PLYR (REAR) (BLACK) (9.670)	97-02	F (U1S)	1	10274252
17.		DISCON	**PLAYER**, AUDIO DISC (REMOTE 12-DISC CHANGER) (9.670)	97-99	F (U1S)	1	16199553
	8-E11	9.670	**PLAYER**, AUDIO DISC (12-DISC CD CHANGER HORIZONTAL MTD) (AC-DELCO #25678544) .	99-02	F (U1S)	1	25678544
18.		8.915	**NUT**, HEX W/CON WA M8X1.25X9.5 19-OD 9 ZP (AUDIO DISC) (8.917)	97-02	.....	1	11506117
19.	8-E10	9.667	**BOLT**, CD/PLYR (BRKT TO CHANGER) (8.900) (AC-DELCO #11503044)	97-02	F (U1S)	4	11503044
20.	8-E10	9.667	**BRACKET**, AUDIO DISC PLYR (L-SHAPED W/4 HOLES) (FORWARD) (9.670) (AC-DELCO #10274254)	97-02	F (U1S)	1	10274254
21.	8-E11	9.670	**CARTRIDGE**, CD/PLYR (12 DISC) (AC-DELCO #25678545)	97-02	F (U1S)	1	25678545
22.	8-E11	9.670	**CONNECTOR**, PLYR-CD (BLACK) (10-WAY F) (W/LEADS) (2.535) (AC-DELCO #PT108) ...	97-02	F	1	12085486
23.	8-E10	9.667	**BRACKET**, CD/PLYR (9.670)	97-02	F	1	10276577

RPO DEFINITIONS

ETA -- HARNESS,INSTRUMENT PANEL,#1
UK1 – RADIO FREQUENCY(JAPANESE)
UL0 – RADIO AM/FM STEREO, SEEK/SCAN, AUTO REV MUSIC SEARCH CASS, AUTO TONE, CLOCK, ETR.
UL2 – RADIO FREQUENCY(EUROPEAN)
UL8 – FREQUENCIES-SAUDI ARABIAN RADIO(EXPORT)
UM6 – RADIO,AM/FM STEREO,CASSETTE,ETR,INCLUDES CLOCK
UN0 – RADIO,AM/FM,STEREO,SEEK/SCAN,COMPACT DISC,AUTO TONE,CLOCK,ETR
UQ0 -- SPEAKER SYSTEM,4,DUAL FRONT DOOR MOUNTED,DUAL STANDARD RANGE PACKAGE SHELF/QUARTER
UW3 – RADIO AM/FM STEREO, SEEK/SCAN, AUTO REV MUSIC SEARCH CASSETTE, DATA SYSTEM, CLOCK, ETR
UZ7 – SPEAKER SYSTEM 8, QUAD FRT DR MTD, DUAL SAIL PNL, DUAL RR HATCH, AMPLIFIER
U1S – PLAYER MULTIPLE COMPACT DISC
U59 – SPEAKER SYSTEM 8, QUAD FRT DR MTD, QUAD SAIL PNL, AMPLIFIER
U62 -- SPEAKER SYSTEM,4,DUAL COAX FRONT,DUAL COAX PACKAGE SHELF
W52 – ENTERTAINMENT SYSTEM OPTION B
W53 – ENTERTAINMENT SYSTEM OPYION C
W54 – ENTERTAINMENT SYSTEM OPTION D
W55 – ENTERTAINMENT SYSTEM OPYION E

cardiagn.com

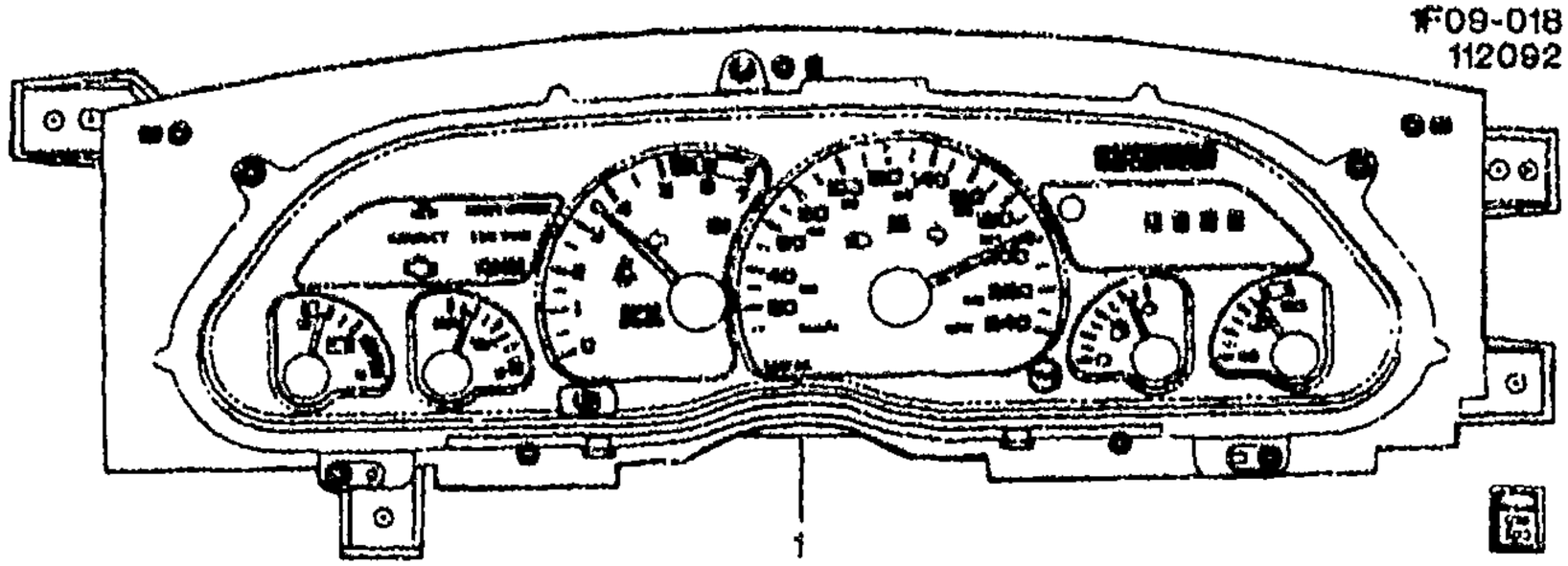

1993 F CLUSTER ASM/INSTRUMENT PANEL (U18,U19)

1.		N.S.	CLUSTER, INST (REMAN) (AVAILABLE THROUGH AC DELCO SERVICE CENTERS)		.....		
	8–E15	9.748	LENS, INST CSTR (AC–DELCO #16131492)	93	F	1	16131492
		8.991	BULB, W/SOCKET .9 CANDLE (INST CSTR) (AC–DELCO #25089349)	93	F	AR	25089349

RPO DEFINITIONS
U18 – SPEEDOMETER,INSTRUMENT,KILOMETER(EXPORT)
U19 – SPEEDOMETER,INSTRUMENT(EXPORT)

cardiagn.com

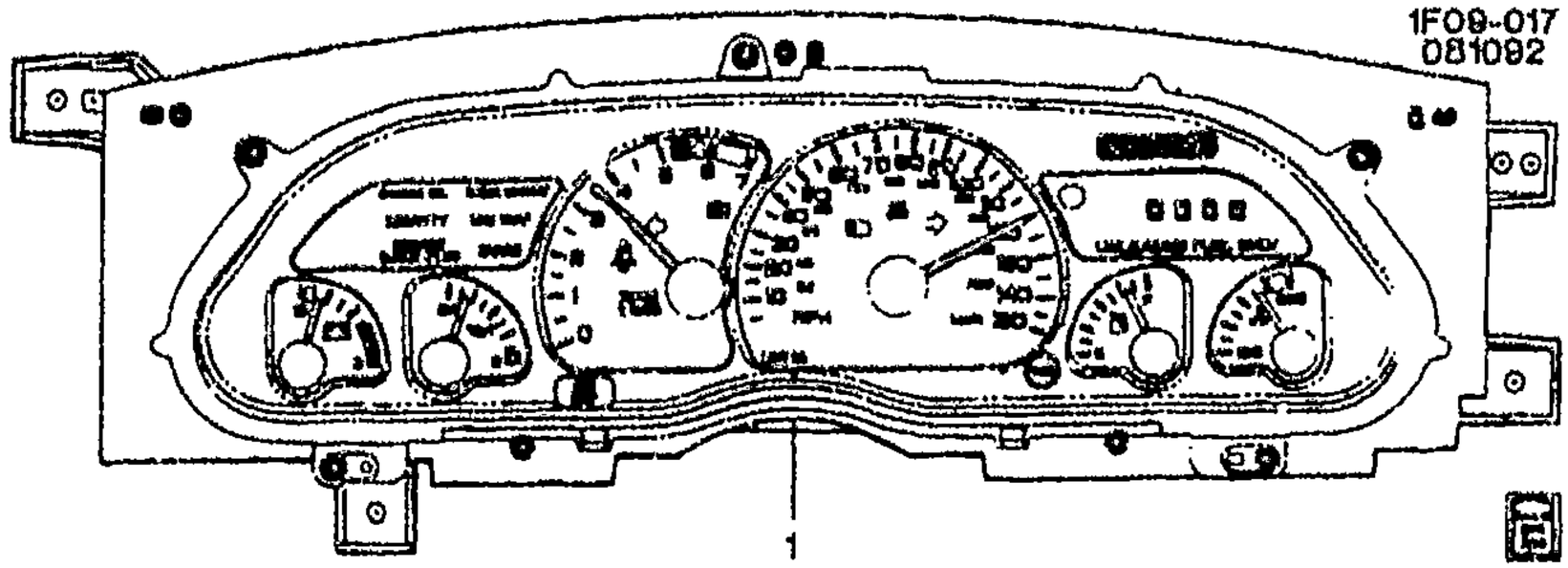

1F09–017

1993–1995 F CLUSTER ASM/INSTRUMENT PANEL (ELECTROMECHANICAL)

1.		DISCON	CLUSTER, INST (NAC)	94–95	F (L32, UB3) (EXC U18, U19)	1	16180191
		DISCON	CLUSTER, INST (NAJ)	94	F (LT1, QMT, UB3) (EXC U18, U19)	1	16180231
	8–E12	9.735	CLUSTER, INST (NAP) (AC–DELCO #16194231)	95	F (L36, UB3) (EXC U18, U19)	1	16194231
		DISCON	CLUSTER, INST (NUMBERS UP TO 150 MPH) (NAJ)	95	F (LT1, UB3) (EXC U18, U19)	1	16180231
		N.S.	CLUSTER, INST (REMAN) (AVAILABLE THROUGH AC DELCO SERVICE CENTERS)		.....		
		8.991	BULB, W/SOCKET .9 CANDLE (INST CSTR) (AC–DELCO #25089349)	93–95	F	AR	25089349
	8–E15	9.748	LENS, INST CSTR (AC–DELCO #16131492)	93–95	F	1	16131492
	8–E12	9.735	CLUSTER, INST (NAD) (AC–DELCO #16180201)	94	F (L32, UB3, U19) (EXC U18) (EXPORT)	1	16180201
	8–E12	9.735	CLUSTER, INST (NAK) (AC–DELCO #16180241)	94	F (LT1, QLC, U19, UB3) (EXC U18) (EXPORT) ..	1	16180241
		DISCON	CLUSTER, INST (NAL)	94	F (L32, U18, UB3) (EXC U19) (EXPORT)	1	16180251
		DISCON	CLUSTER, INST (NAM)	94	F (LT1, U18, UB3) (EXC U19) (EXPORT)	1	16180261
	8–E12	9.735	CLUSTER, INST (NAD) (AC–DELCO #16180201)	95	F (L32, UB3, U19) (EXPORT)	1	16180201
	8–E12	9.735	CLUSTER, INST (NAK) (AC–DELCO #16180241) (LBL NAK & HAS NOS UP TO 240 KPH) (REPLS LBL NAH & NOS UP TO 180 KPH)	95	F (LT1, U19, UB3) (EXPORT)	1	16180241
		DISCON	CLUSTER, INST (NAL)	95	F (L32, U18, UB3) (EXPORT)	1	16180251
		DISCON	CLUSTER, INST (NAM)	95	F (LT1, U18, UB3) (EXPORT)	1	16180261
	8–E12	9.735	CLUSTER, INST (NAR) (AC–DELCO #16194241)	95	F (L36, UB3, U19) (EXPORT)	1	16194241

RPO DEFINITIONS
LT1 – ENGINE–GAS, 8 CYL, 5.7L(5.7P),MFI,HO

cardiagn.com

L36 – ENGINE GAS, 6 CYL, 3.8K, MFI, V6, HO (ERV6 SERIES)
QLC – TIRE,ALL P245/50ZR16/N BL R/PE ST TL HWY
QMT – TIRE ALL P235/55R16/N BL R/PE ST TL AL2
UB3 – CLUSTER,INSTRUMENT(OIL,COOLANT TEMPERATURE,VOLTMETER,TACHOMETER,TRIP ODOMETER)
U18 – SPEEDOMETER,INSTRUMENT,KILOMETER(EXPORT)
U19 – SPEEDOMETER,INSTRUMENT(EXPORT)

cardiagn.com

ILLUSTRATION INDEX

	TITLE	GRID
1993–2002	F87 WINDSHIELD TRIM & HARDWARE	9–D4
1994–2002	F67 WINDSHIELD TRIM & HARDWARE	9–D8
1993–2002	F WIPER SYSTEM/WINDSHIELD	9–D11
1993–2002	F WIPER MOTOR/WINDSHIELD	9–D14
1993–1994	F MIRRORS/REAR VIEW (DG7)	9–D16
1993–2002	F MIRRORS/REAR VIEW (D35)	9–D18
1993–2002	F MIRRORS/REAR VIEW (DD9)	9–D20
1995–2002	F MIRRORS/REAR VIEW (DG7)	9–D22
1993	F INSTRUMENT PANEL PART 2	9–E2
1993–1996	F INSTRUMENT PANEL PART 1	9–E8
1994–1995	F INSTRUMENT PANEL PART 2	9–E12
1996	F INSTRUMENT PANEL PART 2	9–E20
1997–2002	F INSTRUMENT PANEL PART 1	9–F2
1997–2002	F INSTRUMENT PANEL PART 2	9–F7
1993	F CONSOLE/FLOOR	9–F19
1994–1996	F CONSOLE/FLOOR	9–F22
1997	F CONSOLE/FLOOR	9–G2
1998–2002	F CONSOLE/FLOOR	9–G6
1998–2002	F CONSOLE/FLOOR(T2J,TR7)	9–G11
1993–2002	F DOOR HARDWARE/FRONT	9–G16
1994–1995	F ENTRY SYSTEM/KEYLESS REMOTE (AU0)	9–G25
1996–2002	F ENTRY SYSTEM/KEYLESS REMOTE (AU0)	9–G26
1993–2002	F87 WEATHERSTRIPS	9–H2
1994–2002	F67 WEATHERSTRIPS	9–H6

cardiagn.com

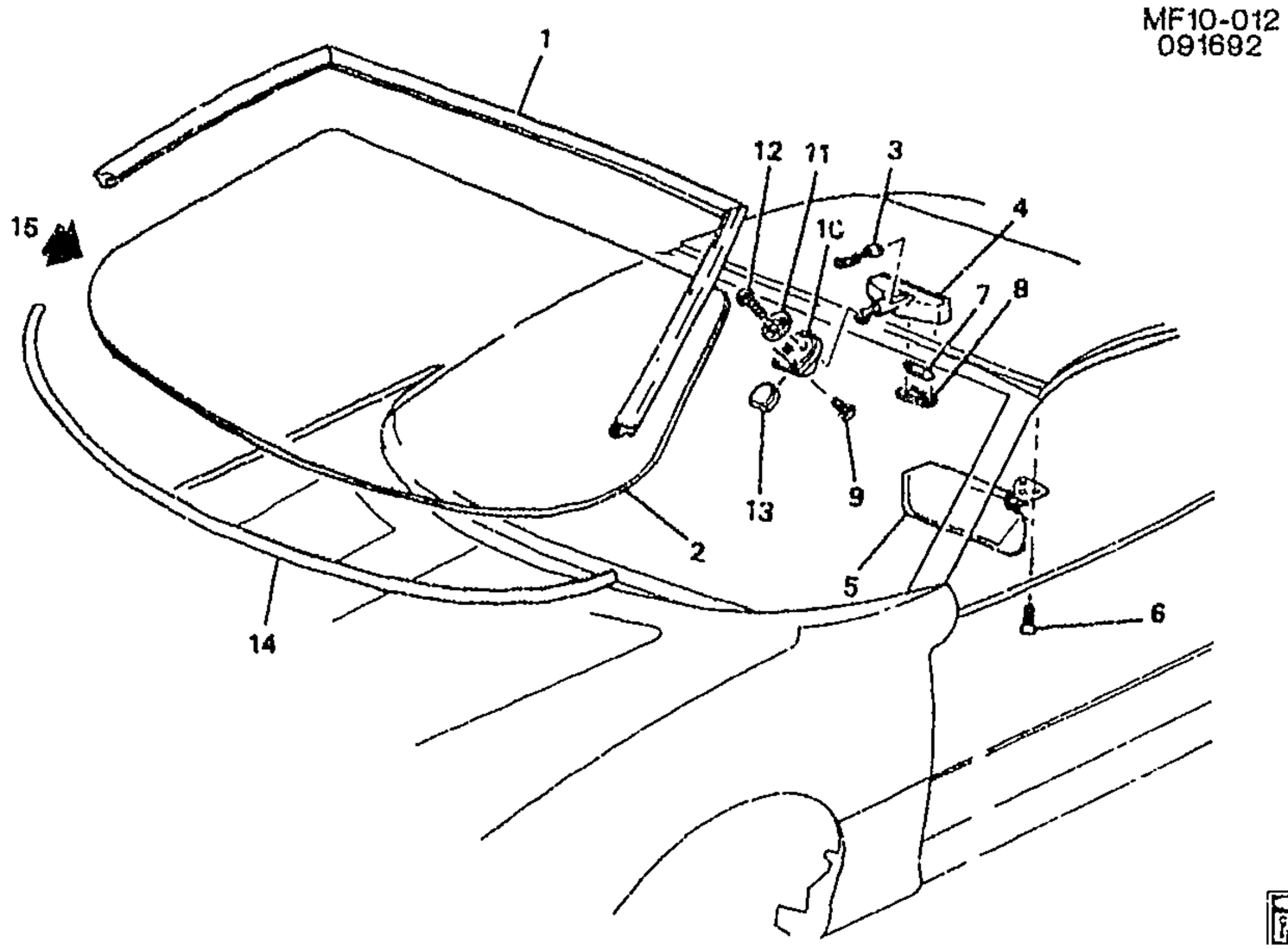

MF10-012

1993-2002 F87 WINDSHIELD TRIM & HARDWARE

1.	9-A9	10.093	MOLDING, W/S RVL (HIGH GLOSS)	93-00	F87 (EXC CC1)	1	10284786
	9-A9	10.093	MOLDING, W/S RVL (HIGH GLOSS)	93-00	F87 (CC1)	1	10293683
	9-A9	10.093	MOLDING, W/S RVL (LOW GLOSS)	93-00	F87 (EXC CC1)	1	10313065
	9-A9	10.093	MOLDING, W/S RVL (LOW GLOSS)	93-00	F87 (CC1)	1	10313067
	9-A9	10.093	MOLDING, W/S RVL (HIGH GLOSS) (1ST DES IS HIGH GLOSS, SEE 10313065 FOR 2ND DES.)	01	F87 (EXC CC1) (1ST DES)	1	10284786
	9-A9	10.093	MOLDING, W/S RVL (HIGH GLOSS) (1ST DES IS HIGH GLOSS, FOR 2ND DES SEE 10313067.)	01	F87 (CC1) (1ST DES)	1	10293683
	9-A9	10.093	MOLDING, W/S RVL (LOW GLOSS) (FOR 1ST DES SEE 10284786)	01	F87 (EXC CC1) (2ND DES)	1	10313065
	9-A9	10.093	MOLDING, W/S RVL (LOW GLOSS) (FOR 1ST DES SEE 10293683)	01	F87 (CC1) (2ND DES)	1	10313067
	9-A9	10.093	MOLDING, W/S RVL (LOW GLOSS)	02	F87 (EXC CC1)	1	10313065
	9-A9	10.093	MOLDING, W/S RVL (LOW GLOSS)	02	F87 (CC1)	1	10313067
2.	9-A8	10.027	WINDSHIELD, (INCLS 13)	93-97	F	1	10238528
	9-A8	10.027	WINDSHIELD, (INCLS 13)	98-02	F (EXC A26)	1	10238528

cardiagn.com

	9-A8	10.027	WINDSHIELD, (INCLS 13)	02	F (A26)	1	10238529
	9-A8	10.027	WINDSHIELD, (INCLS 13)	98-02	F (A26) (EXPORT)	1	10238529
3.	9-C26	11.927	CONNECTOR, LP-RDG (4-WAY F W/LEADS) (2.535) (AC-DELCO #PT382)	93-02	F	1	12102900
4.	9-A11	10.185	MIRROR, I/S RR VIEW (IF ONLY REPAIRING MIR SUPT, ORDER REPAIR KIT #12517104) (INCLS 4, 7-12) (INCLS BULBS)	93	F	1	10206750
	9-A11	10.185	MIRROR, I/S RR VIEW (IF ONLY REPAIRING MIR SUPT, ORDER REPAIR KIT #12517104) (INCLS 4, 7-12) (BLACK)	93	F	1	10404249
	9-A11	10.185	MIRROR, I/S RR VIEW (IF ONLY REPAIRING MIR SUPT, ORDER REPAIR KIT #12517104) (INCLS 4, 7-12)	93	F	1	10404250
	9-A11	10.185	MIRROR, I/S RR VIEW (INCLS 7, 8) (BLACK)	94-00	F (EXC T2J)	1	10404249
	9-A11	10.185	MIRROR, I/S RR VIEW (INCLS 7, 8) (HAS A 7-PIN CONNECTOR. FOR 1ST DES SEE 10404249-50)	01	F (2ND DES)	1	10304121
	9-A11	10.185	MIRROR, I/S RR VIEW (INCLS 7, 8)	02	F	1	10304121
	9-A11	10.185	MIRROR, I/S RR VIEW (HAS 4-PIN CONNECTOR) (FOR 2ND DES SEE 10304121) (INCLS 7, 8) (BLACK)	01	F (EXC T2J) (1ST DES)	1	10404249
	9-A11	10.185	MIRROR, I/S RR VIEW (INCLS 7, 8) (INCLS BULBS)	98-00	F (T2J) (EXPORT)	1	10206750
	9-A11	10.185	MIRROR, I/S RR VIEW (INCLS 7, 8)	98-00	F (T2J) (EXPORT)	1	10404250
	9-A11	10.185	MIRROR, I/S RR VIEW (INCLS 7, 8) (INCLS BULBS) (HAS 4-PIN CONNECTOR. FOR 2ND DES SEE 10304121)	01	F (T2J) (1ST DES) (EXPORT)	1	10206750
	9-A11	10.185	MIRROR, I/S RR VIEW (INCLS 7, 8) (HAS 4-PIN CONNECTOR. FOR 2ND DES SEE 10304121) ...	01	F (T2J) (1ST DES) (EXPORT)	1	10404250
	9-A11	10.185	MIRROR, I/S RR VIEW (INCLS 7, 8) (INCLS BULBS) (HAS 4-PIN CONNECTOR. FOR 2ND DES SEE 10304121)	02	F (T2J) (EXPORT)	1	10206750
5.	9-A16	10.203	SUNSHADE, (GRAPHITE)	93	F (12I)	RH	12453671
	9-A16	10.203	SUNSHADE, (GRAPHITE)	93	F (12I)	LH	12453672
		DISCON	SUNSHADE, (BEIGE)	93	F (64I)	RH	12453673
	9-A16	10.203	SUNSHADE, (BEIGE)	93	F (64I)	LH	12453674
	9-A16	10.203	SUNSHADE, (GRAY)	93	F (14I)	LH	12453676
	9-A16	10.203	SUNSHADE, (GRAPHITE)	94-95	F87 (12I, 73I)	RH	12453679
	9-A16	10.203	SUNSHADE, (GRAPHITE)	94-95	F87 (12I, 73I)	LH	12453680
	9-A16	10.203	SUNSHADE, (BEIGE)	94-95	F87 (64I)	RH	12453681
	9-A16	10.203	SUNSHADE, (BEIGE)	94-95	F87 (64I)	LH	12453682
	9-A16	10.203	SUNSHADE, (GRAY)	94-95	F87 (14I)	RH	12453683
	9-A16	10.203	SUNSHADE, (GRAY)	94-95	F87 (14I)	LH	12453684
	9-A16	10.203	SUNSHADE, (NEUTRAL)	96-97	F87 (52I) (EXC Z49) ...	RH	10407222
	9-A16	10.203	SUNSHADE, (NEUTRAL)	96-97	F87 (52I) (EXC Z49) ...	LH	10407223

cardiagn.com

	9–A16	10.203	SUNSHADE, (NEUTRAL)	96–02	F87 (Z49, 52I)	RH	10409540
	9–A16	10.203	SUNSHADE, (NEUTRAL)	96–02	F87 (Z49, 52I)	LH	10409541
	9–A16	10.203	SUNSHADE, (GRAPHITE) (W/VAN MIRROR)	96	F87 (12I, 14I, 73I)	RH	12453685
	9–A16	10.203	SUNSHADE, (GRAPHITE)	96	F87 (12I, 14I, 73I)	LH	12453686
	9–A16	10.203	SUNSHADE, (GRAY)	97	F87 (10I, 14I, 73I) (EXC Z49)	RH	10407224
	9–A16	10.203	SUNSHADE, (GRAY)	97	F87 (10I, 14I, 73I) (EXC Z49)	LH	10407225
	9–A16	10.203	SUNSHADE, (PEWTER)	97	F87 (92I)	RH	10407226
	9–A16	10.203	SUNSHADE, (PEWTER)	97	F87 (92I)	LH	10407227
	9–A16	10.203	SUNSHADE, (NEUTRAL)	98–02	F87 (52I) (EXC D21, Z49)	RH	10407222
	9–A16	10.203	SUNSHADE, (NEUTRAL)	98–02	F87 (52I) (EXC D21, Z49)	LH	10407223
	9–A16	10.203	SUNSHADE, (GRAY)	98–99	F87 (10I, 14I, 73I) (EXC D21, Z49)	RH	10407224
	9–A16	10.203	SUNSHADE, (GRAY)	98–99	F87 (10I, 14I, 73I) (EXC D21, Z49)	LH	10407225
	9–A16	10.203	SUNSHADE, (GRAY)	98–99	F87 (Z49, 10I, 14I, 73I) .	RH	10409542
	9–A16	10.203	SUNSHADE, (GRAY)	98–99	F87 (Z49, 10I, 14I, 73I) .	LH	10409543
	9–A16	10.203	SUNSHADE, (PEWTER)	00–02	F87 (92I) (EXC D21, Z49)	RH	10407226
	9–A16	10.203	SUNSHADE, (PEWTER)	00–02	F87 (92I) (EXC D21, Z49)	LH	10407227
	9–A16	10.203	SUNSHADE, (EBONY)	00–02	F87 (19I, 73I) (EXC D21, Z49)	RH	10410035
	9–A16	10.203	SUNSHADE, (EBONY)	00–02	F87 (19I, 73I) (EXC D21, Z49)	LH	10410036
	9–A16	10.203	SUNSHADE, (EBONY)	00–02	F87 (Z49, 19I, 73I)	RH	10410037
	9–A16	10.203	SUNSHADE, (EBONY)	00–02	F87 (Z49, 19I, 73I)	LH	10410038
	9–A16	10.203	SUNSHADE, (PEWTER)	00–02	F87 (Z49, 92I)	RH	10416654
	9–A16	10.203	SUNSHADE, (PEWTER)	00–02	F87 (Z49, 92I)	LH	10416655
	9–A16	10.203	SUNSHADE, (EBONY)	01–02	F87 (D21, 19I, 73I, 92I) .	LH	10410034
	9–A16	10.203	SUNSHADE, (NEUTRAL)	02	F87 (D21, 52I)	RH	10407207
	9–A16	10.203	SUNSHADE, (NEUTRAL)	02	F87 (D21, 52I)	LH	10407208
	9–A16	10.203	SUNSHADE, (EBONY)	02	F87 (D21, 19I, 73I, 92I) .	RH	10410033
	9–A16	10.203	SUNSHADE, (NEUTRAL)	98–02	F87 (D21, 52I) (EXPORT)	RH	10407207
	9–A16	10.203	SUNSHADE, (NEUTRAL)	98–02	F87 (D21, 52I) (EXPORT)	LH	10407208
	9–A16	10.203	SUNSHADE, (GRAY)	98–99	F87 (D21, 10I, 14I, 73I) (EXPORT)	RH	10407209
	9–A16	10.203	SUNSHADE, (GRAY)	98–99	F87 (D21, 10I, 14I, 73I) (EXPORT)	LH	10407210
	9–A16	10.203	SUNSHADE, (EBONY)	00–02	F87 (D21, 19I, 73I, 92I) (EXPORT)	RH	10410033
6.		8.977	SCREW, OVAL CSK TRIM HD W/WA TYPE AB (4.2X1.4X20) (S/S) (16.682)	93–02	.....	6	12338093
7.		8.991	BULB, 6CP ID 212–2 (C/LP) (PART OF 4) (AC–DELCO #L212–2)	93–02	F	2	9431809
8.		N.S.	LENS, C/LP (PART OF 4)		.....		
9.	9–A14	10.186	BOLT, I/S RR VIEW MIR (PART OF 4) (BLACK) (TORX) (M10X24X12.7)	93	F	1	10078201
10.	9–A15	10.187	BRACKET, I/S RR VIEW MIR (PART OF 4) (*KIT1)	93–02	F	1	20626174

cardiagn.com

11.		N.S.	WASHER, I/S RR VIEW MIR (PART OF 4) (*KIT1)					
12.		N.S.	BOLT, I/S RR VIEW MIR (PART OF 4) (*KIT1)					
13.	9-A15	10.187	BRACKET, I/S RR VIEW MIR (PART OF 2, 4)	93-02	F	1	20626174
14.	9-A9	10.092	SEALING STRIP, W/S (FOAM TAPE) (223MM LONGER THAN 10130875)	93-02	F	1	10132029
15.		8.800	ADHESIVE KIT, GLASS (URETHANE) (W/S)	93-02		1	12346392

SERVICE KITS

1.	9-A14	10.166	PLATE KIT, I/S RR VIEW MIR MT (INCLS 10-12)	93-02	F	1	12517104
	9-A14	10.186	PLATE KIT, I/S RR VIEW MIR MT (INCLS 10-12)	94-02	F (T2J) (EXPORT)	1	12517104

RPO DEFINITIONS
A26 - WINDOW,UNITED KINGDOM AND EUROPEAN GLAZING(EXPORT)
CC1 - ROOF,HATCH,REMOVABLE PANELS,GLASS
D21 - SUNSHADE WINDSHIELD(EXPORT)
T2J - ORNAMENTATION,INTERIOR,EXPORT UNIQUE REQUIREMENTS(EXPORT)
Z49 - MANDATORY CANADIAN BASE EQUIPMENT MODIFICATIONS(CANADIAN)
10I - INTERIOR TRIM - ARCTIC WHITE
12I - INTERIOR TRIM GRAPHITE
14I - INTERIOR TRIM LT GRAY
19I - INTERIOR TRIM,BLACK
52I - INTERIOR TRIM LIGHT NEUTRAL
64I - INTERIOR TRIM,LIGHT BEIGE
73I - INTERIOR TRIM,FLAME RED
92I - INTERIOR TRIM SHALE/PEWTER

cardiagn.com

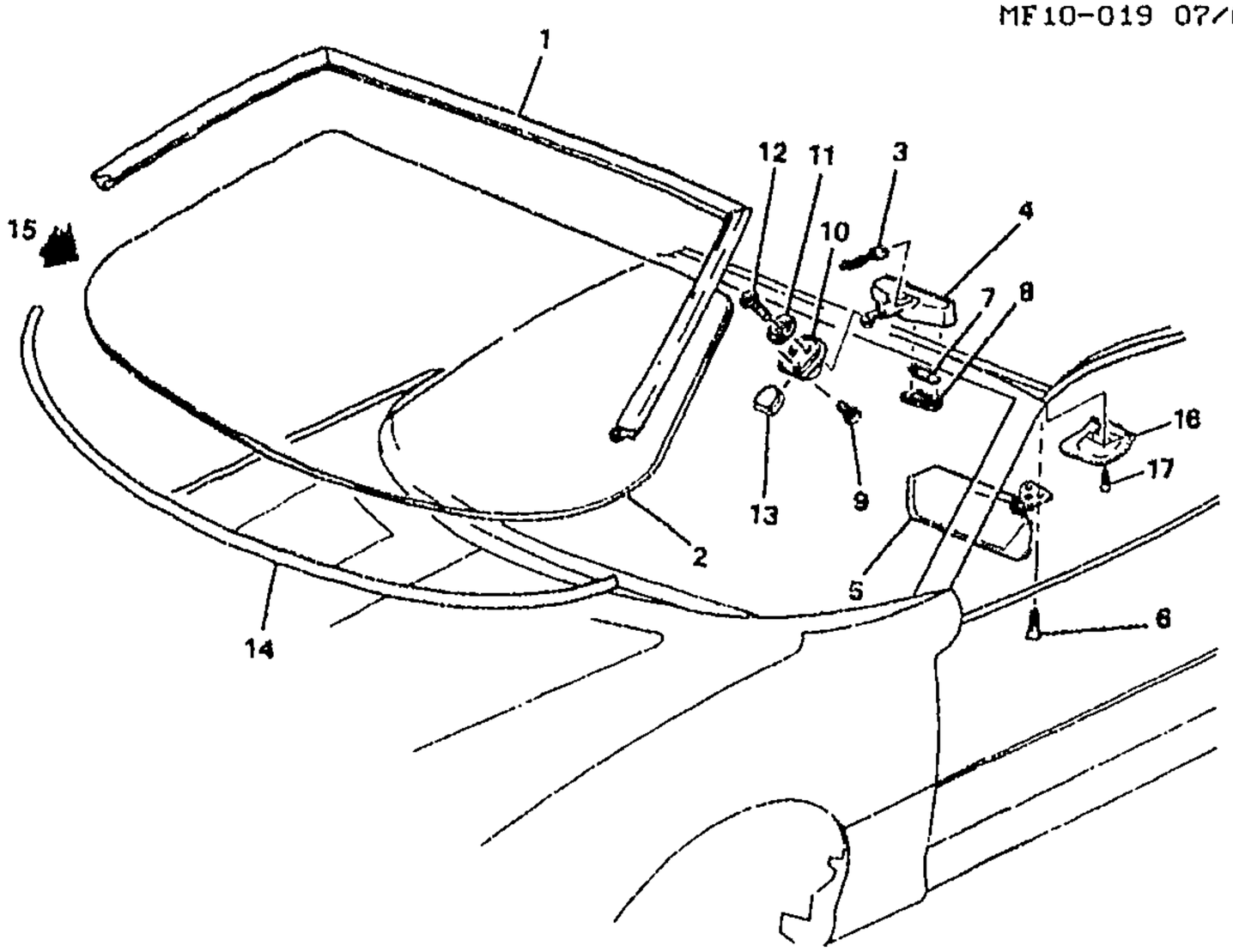

MF10-019

1994-2002 F67 WINDSHIELD TRIM & HARDWARE

1.	9-A9	10.093	MOLDING, W/S RVL (HIGH GLOSS)	94-00	F67	1	10284787
	9-A9	10.093	MOLDING, W/S RVL (LOW GLOSS)	94-00	F67	1	10313066
	9-A9	10.093	MOLDING, W/S RVL (HIGH GLOSS) (1ST DES IS HIGH GLOSS, FOR 2ND DES SEE 10313066.)	01	F67 (1ST DES)	1	10284787
	9-A9	10.093	MOLDING W/S RVL (LOW GLOSS) (FOR 1ST DES SEE 10284787)	01	F67 (2ND DES)	1	10313066
	9-A9	10.093	MOLDING, W/S RVL (LOW GLOSS)	02	F67	1	10313066
2.	9-A8	10.027	WINDSHIELD, (INCLS 13)	94-97	F	1	10238528
	9-A8	10.027	WINDSHIELD, (INCLS 13)	98-02	F (EXC A26)	1	10238528
	9-A8	10.027	WINDSHIELD, (INCLS 13)	02	F (A26)	1	10238529
	9-A8	10.027	WINDSHIELD, (INCLS 13)	98-02	F (A26) (EXPORT)	1	10238529
3.	9-C26	11.927	CONNECTOR, LP-RDG (4-WAY F W/LEADS) (2.535) (AC-DELCO #PT382)	94-02	F	1	12102900
4.	9-A11	10.185	MIRROR, I/S RR VIEW (INCLS 7, 8) (BLACK)	94-00	F (EXC T2J)	1	10404249
	9-A11	10.185	MIRROR I/S RR VIEW (INCLS 7, 8) (HAS A 7-PIN CONNECTOR. FOR 1ST DES SEE 10404249-50)	01	F (2ND DES)	1	10304121
	9-A11	10.185	MIRROR, I/S RR VIEW (INCLS 7, 8)	02	F	1	10304121

cardiagn.com

	9-A11	10.185	MIRROR, I/S RR VIEW (HAS 4-PIN CONNECTOR) (FOR 2ND DES SEE 10304121) (INCLS 7, 8) (BLACK)	01	F (EXC T2J) (1ST DES)	1	10404249
5.	9-A16	10.203	SUNSHADE, (GRAPHITE)	94-95	F67	RH	12453679
	9-A16	10.203	SUNSHADE, (GRAPHITE)	94-95	F67 (12I)	LH	12453680
	9-A16	10.203	SUNSHADE, (GRAPHITE) (W/VAN MIRROR)	96	F67	RH	12453685
	9-A16	10.203	SUNSHADE, (GRAPHITE)	96	F67	LH	12453686
	9-A16	10.203	SUNSHADE, (NEUTRAL)	97-02	F67 (52I)	RH	10407222
	9-A16	10.203	SUNSHADE, (GRAY)	97	F67 (EXC Z49)	RH	10407224
	9-A16	10.203	SUNSHADE, (GRAY)	97	F67 (EXC Z49)	LH	10407225
	9-A16	10.203	SUNSHADE, (GRAY)	98-99	F67 (EXC D21, Z49) ...	RH	10407224
	9-A16	10.203	SUNSHADE, (GRAY)	98-99	F67 (EXC D21, Z49) ...	LH	10407225
	9-A16	10.203	SUNSHADE, (GRAY)	98-99	F67 (Z49)	RH	10409542
	9-A16	10.203	SUNSHADE, (GRAY)	98-99	F67 (Z49)	LH	10409543
	9-A16	10.203	SUNSHADE, (EBONY)	00-02	F67 (EXC D21, Z49) ...	RH	10410035
	9-A16	10.203	SUNSHADE, (EBONY)	00-02	F67 (EXC D21, Z49) ...	LH	10410036
	9-A16	10.203	SUNSHADE, (EBONY)	00-02	F67 (Z49)	RH	10410037
	9-A16	10.203	SUNSHADE, (EBONY)	00-02	F67 (Z49)	LH	10410038
	9-A16	10.203	SUNSHADE, (EBONY)	01-02	F67 (D21)	LH	10410034
	9-A16	10.203	SUNSHADE, (EBONY)	02	F67 (D21)	RH	10410033
	9-A16	10.203	SUNSHADE, (GRAY)	98-99	F67 (D21) (EXPORT) ..	RH	10407209
	9-A16	10.203	SUNSHADE, (GRAY)	98-99	F67 (D21) (EXPORT) ..	LH	10407210
	9-A16	10.203	SUNSHADE, (EBONY)	00-02	F67 (D21) (EXPORT) ..	RH	10410033
6.		8.977	SCREW, OVAL CSK TRIM HD W/WA TYPE AB (4.2X1.4X20) (S/S) (16.682)	94-02	.....	6	12338093
7.		8.991	BULB, 6CP ID 212-2 (C/LP) (PART OF 4) (AC-DELCO #L212-2)	94-02	F	2	9431809
8.		N.S.	LENS, C/LP (PART OF 4)		.....		
9.	9-A14	10.186	BOLT, I/S RR VIEW MIR (PART OF 4) (EXPORT ONLY) (BLACK) (TORX) (M10X24X12.7)	94-02	F	1	10078201
	9-A14	10.186	BOLT, I/S RR VIEW MIR (PART OF 4) (EXPORT ONLY) (BLACK) (TORX) (M10X24X12.7)	94-97	F (T2J) (EXPORT)	1	10078201
10.		N.S.	BRACKET, I/S RR VIEW MIR (USED ON PONTIAC EXPORT ONLY)		.....		
11.		N.S.	WASHER, I/S RR VIEW MIR (USED ON PONTIAC EXPORT ONLY)		....		
12.		N.S.	BOLT, I/S RR VIEW MIR (USED ON PONTIAC EXPORT ONLY) ...		.....		
13.	9-A15	10.187	BRACKET, I/S RR VIEW MIR (PART OF 2)	94-02	F	1	20626174
14.	9-A9	10.092	SEALING STRIP, W/S (FOAM TAPE) (223MM LONGER THAN 10130875)	94-02	F	1	10132029
15.		8.800	ADHESIVE KIT, GLASS (URETHANE) (W/S)	94-02	....	1	12346392
16.	9-N25	14.080	STRIKER, F/TOP FRT LAT	94-02	F67	RH	10277200
	9-N25	14.080	STRIKER, F/TOP FRT LAT	94-02	F67	LH	10277201

cardiagn.com

								MF10-019
17.	9-N25	14.080	BOLT, F/TOP FRT LAT STKR (CHROME) (M6X1.0X19.5 TORX NO) (10.474)	94-99	F67	4	20341140
	9-N25	14.080	BOLT, F/TOP FRT LAT STKR (BLACK) (16.330)	94-02	F67	4	20435412
	9-N25	14.080	BOLT, F/TOP FRT LAT STKR (M6X1.0X26 HEX) (8.900)	99-02	F67	4	10409170

RPO DEFINITIONS
A26 – WINDOW,UNITED KINGDOM AND EUROPEAN GLAZING(EXPORT)
D21 – SUNSHADE WINDSHIELD(EXPORT)
T2J – ORNAMENTATION,INTERIOR,EXPORT UNIQUE REQUIREMENTS(EXPORT)
Z49 – MANDATORY CANADIAN BASE EQUIPMENT MODIFICATIONS(CANADIAN)
12I – INTERIOR TRIM GRAPHITE
52I – INTERIOR TRIM LIGHT NEUTRAL

cardiagn.com

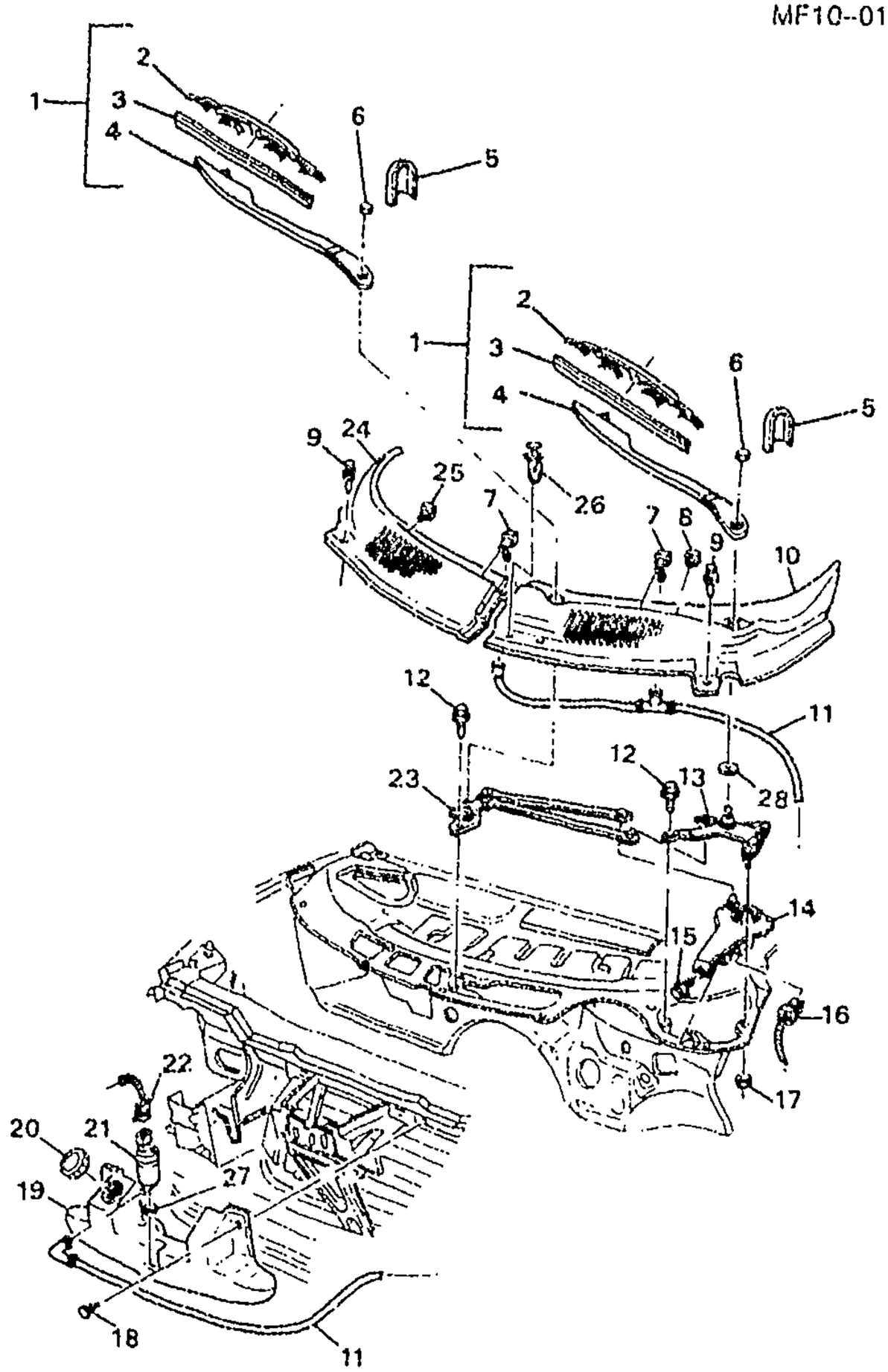

MF10–014

1993–2002 F WIPER SYSTEM/WINDSHIELD

1.		N.S.	BLADE, WSW (W/ARM) (INCLS 2–5) (SERV BY COMPONENTS) .		.. ..		
2.	9--A9	10.146	BLADE, WSW (PART OF 1) (COMES W/INSERT)	93–97	F	2	22121694
	9--A9	10.146	BLADE, WSW (PART OF 1) (24") (AC--DELCO #18–24PF)	93–97	FP	2	12481132
	9–A9	10.146	BLADE, WSW (PART OF 1) (INCLS INSERT) ("BOSCH" INSERT NOT SERVICED.)	98--02	F	2	22143969
	9--A9	10.146	BLADE, WSW (PART OF 1) (24") (AC–DELCO #18–24AS)	99	F	2	12481111

cardiagn.com

	9-A9	10.146	BLADE, WSW (PART OF 1) (24") (AC-DELCO #18-24PF)	99	F	2	12481132
	9-A9	10.146	BLADE, WSW (PART OF 1) (24") (AC-DELCO #18-24WW)	99	F	2	12481140
3.	9-A9	10.146	WIPER, W/S (PART OF 1) (REPLACEMENT BLADE SEE GROUP 10146)	93-97	F	2	22121392
		N.S.	WIPER, W/S (FOR 1998-2000 SEE PART # 22143969) (PART OF 1, 2)	98-02	F		
4.	9-A10	10.147	ARM, WSW (PART OF 1)	93-97	F	LH	22155458
	9-A10	10.147	ARM, WSW (PART OF 1)	93-97	F	RH	22155459
	9-A10	10.147	ARM, WSW (PART OF 1)	98-02	F	LH	22154388
	9-A10	10.147	ARM, WSW (PART OF 1)	98-02	F	RH	22154389
5.	9-A10	10.147	CAP, WSW ARM FIN (PART OF 1)	93-97	F	RH	22122401
	9-A10	10.147	CAP, WSW ARM FIN (PART OF 1)	93-97	F	LH	22122402
	9-A10	10.147	CAP, WSW ARM FIN (PART OF 1)	98-02	F	LH	22155370
	9-A10	10.147	CAP, WSW ARM FIN (PART OF 1)	98-02	F	RH	22155371
6.	9-A10	10.147	NUT, WSW ARM (8X1.25X6.8 GM510M)	93-02	F	2	3535261
7.	9-A11	10.156	NOZZLE, WSWA (PART OF 10, 24)	93-02	F	2	14098191
8.		N.S.	STOP, WSW BLADE (PART OF 10)				
9.	9-N17	12.800	RETAINER, AIR INL SCRN (10.154)	93-02	F	7	21075686
10.	9-N17	12.800	SCREEN, AIR INL (INCLS 7, 8)	93-02	F	LH	10299673
11.	9-A11	10.155	HOSE, WSWA PUMP	93-02	F	1	12124774
12.	9-A11	10.159	BOLT, WSW TRANS (M6X1.0X34.35) (10.152)	93	F	4	10222298
	9-A11	10.159	BOLT, WSW TRANS (M6X1X25, 23, 17 OD) (8.900)	94-02	F	4	11516413
		8.900	BOLT/SCREW, HEX FL WA, M6X1X25, 17 OD, 6202M STL, 7111M, MACH (WSW TRANS)	93-02		AR	11516413
13.	9-A11	10.159	TRANSMISSION, WSW (AC-DELCO #22122286)	93-97	F	LH	22122286
	9-A11	10.159	TRANSMISSION, WSW (AC-DELCO #12365324)	98-02	F	LH	12365324
14.	9-A10	10.150	MOTOR KIT, WSW (INCLS CVR, MTR, ARM, GROMMET) (AC-DELCO #12367254)	93-99	F	1	12367254
	9-A10	10.150	MOTOR KIT, WSW (AC-DELCO #12487575)	00-02	F	1	12487575
15.	9-A10	10.152	BOLT, WSW MOT (M6X1.0X34.35)	93-02	F	1	10222298
16.	9-A10	10.150	CONNECTOR, MOT-WSW (BLACK) (5-WAY F)	93-02	F	1	12129126
17.		8.917	NUT, HFH 6X1X7 SELF LK 14.2-OD (9) 7111M ALL MET PREV TORQ (WSW TRANS)	93-02		1	11516075
18.	9-A11	10.154	RETAINER, WSWA SOLV CNTNR	93-02	F	4	21075686
19.	9-A11	10.154	CONTAINER KIT, WSWA SOLV	93-02	F	1	22111377
20.	9-A11	10.154	CAP, WSWA SOLV CNTNR (16.065) (AC-DELCO #12363335)	93-02	F	1	12363335

cardiagn.com

21.	9-A10	10.153	**PUMP**, WSWA (AC-DELCO #22127653)	93-02	F	1	22127653
22.	9-A10	10.153	**CONNECTOR**, MOT-WSWA PUMP (BLACK) (2-WAY F W/LEADS) (3.670) (AC-DELCO #PT374)	93-02	F	1	12102747
23.	9-A11	10.159	**TRANSMISSION**, WSW (AC-DELCO #22122256)	93-97	F	RH	22122256
	9-A11	10.159	**TRANSMISSION**, WSW (AC-DELCO #12365325)	98-02	F	RH	12365325
24.	9-N17	12.800	**SCREEN**, AIR INL (INCLS 7, 25)	93-02	F	RH	10246203
25.		N.S.	**STOP**, WSW BLADE (PART OF 24)				
26.	9-N17	12.800	**RETAINER**, AIR INL SCRN (2.729)	93-02	F	1	10207146
27.	9-A11	10.154	**GROMMET**, WSWA SOLV CNTNR (18.00 MM OD) (10.153)	93-02	F	1	22039457
28.	9-N17	12.800	**SEAL**, AIR INL GRL PNL	96-97	F	LH	10292749
	9-N17	12.800	**SEAL**, AIR INL GRL PNL	98-02	F	LH	10293348
		N.S.	**SEAL**, AIR INL GRL PNL	93-95			

cardiagn.com

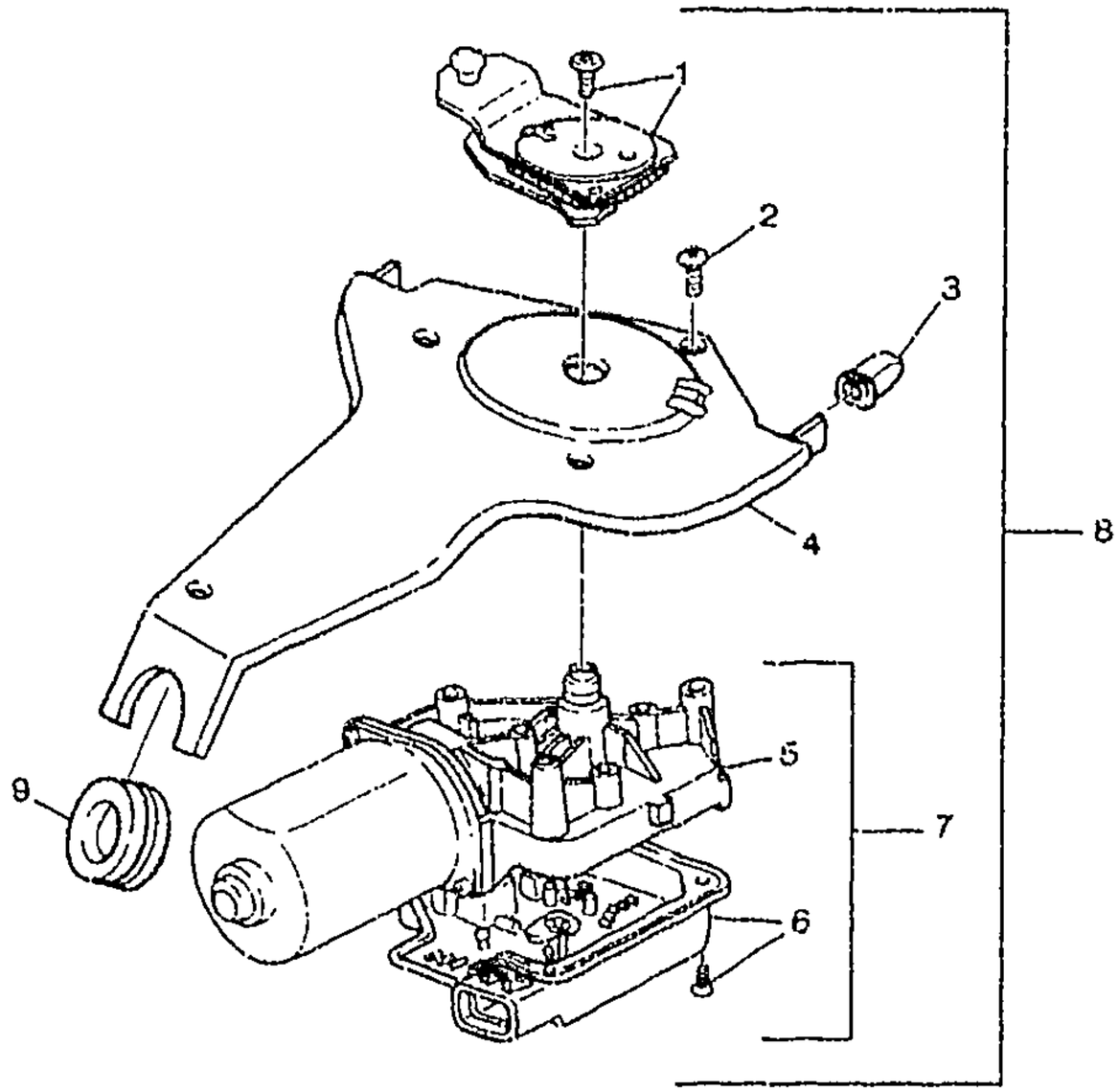

1993-2002 F WIPER MOTOR/WINDSHIELD

1.	9-A10	10.151	ARM, WSW MOT CRK (PART OF 8)	93-02	F	1	12494833
2.		N.S.	SCREW, WSW MTR TO BRKT (PART OF 7, 8)				
3.	9-A10	10.152	GROMMET, WSW MOT (PART OF 8)	93-02	F	2	22100481
4.		N.S.	BRACKET, WSW MTR (PART OF 8)				
5.		N.S.	MOTOR, WSW (MOTOR, WSW (PART OF 7, 8))				
6.	9-A10	10.150	COVER KIT WSW MOT (W/CIR BD) (PART OF 7, 8) (INCLS SREWS) (AC-DELCO #12367295)	93-02	F	1	12367295
		N.S.	BOLT, WSW MOT CVR (PART OF COVER)				
		N.S.	BOLT, WSW MOT				
7.	9-A10	10.150	MOTOR, WSW (INCLS 2, 5, 6) (PART OF 8) (MTR ONLY, SHIPPED W/DUMMY CRK ARM, REUSE OLD OR NEW 22155617) (AC-DELCO #22155615)	93-95	F	1	22155615
		N.S.	MOTOR, WSW (INCLS 2, 5, 6) (PART OF 8)	96-02	F		

cardiagn.com

							GM10–107
8.	9–A10	10.150	**MOTOR KIT**, WSW (INCLS 1–7, 9) (INCLS CVR, MTR, ARM, GROMMET) (AC–DELCO #12367254)	93–99	F	1	12367254
	9–A10	10.150	**MOTOR KIT**, WSW (INCLS 1–7, 9) (AC–DELCO #12487575)	00–02	F	1	12487575
9.		N.S.	**GROMMET**, WSW MOT (PART OF 8)		.....		

cardiagn.com

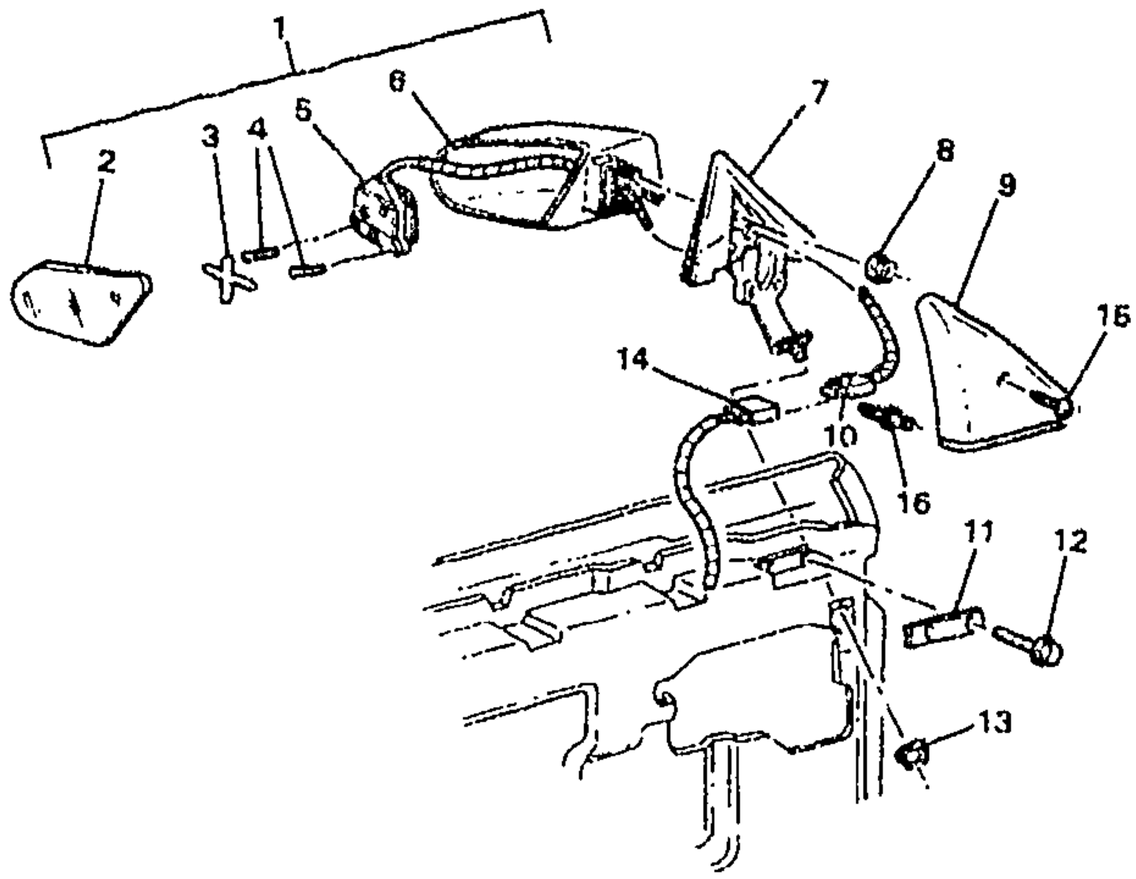

1993-1994 F MIRRORS/REAR VIEW (DG7)

1.	9-A11	10.185	MIRROR, O/S RR VIEW (INCLS 2-6, 10) (PAINT TO MATCH)	93	F (DG7, UQ0)	RH	10279357
	9-A11	10.185	MIRROR, O/S RR VIEW (INCLS 2-6, 10) (PAINT TO MATCH)	93	F (DG7, UQ0)	LH	10279358
	9-A11	10.185	MIRROR, O/S RR VIEW (INCLS 2-6, 10) (PAINT TO MATCH)	93-94	F (DG7, U82)	RH	10279359
	9-A11	10.185	MIRROR, O/S RR VIEW (INCLS 2-6, 10) (PAINT TO MATCH)	93-94	F (DG7, U82)	LH	10279360
	9-A11	10.185	MIRROR, O/S RR VIEW (INCLS 2-6, 10) (PAINT TO MATCH)	94	F (DG7, UQ0, U62)	RH	10279357
	9-A11	10.185	MIRROR, O/S RR VIEW (INCLS 2-6, 10) (PAINT TO MATCH)	94	F (DG7, UQ0, U62)	LH	10279358
2.	9-A11	10.185	MIRROR KIT, O/S RR VIEW ("SR1" STAMPED ON BTM CTR OF GLS FACE) (PART OF 1) (GLS & TAPE, MUST REUSE OLD FRM BY BREAKING OUT OLD GLS) ...	93-94	F (DG7)	RH	12528879
	9-A11	10.185	MIRROR KIT, O/S RR VIEW ("SR1" STAMPED ON BTM CTR OF GLS FACE) (PART OF 1) (GLS & TAPE, MUST REUSE OLD FRM BY BREAKING OUT OLD GLS) ...	93-94	F (DG7)	LH	12528880
3.	9-A11	10.185	TRUNNION, O/S RR VIEW MIR (PART OF 1)	93-94	F (DG7)	2	12522163
4.		N.S.	STUD, O/S RR VIEW MIR ADJR BALL (PART OF 1)		.....		
5.	9-A14	10.186	MOTOR, O/S RR VIEW MIR (INCL 10) (PART OF 1) (10.185) ..	93	F (DG7, UQ0)	2	10198246
	9-A14	10.186	MOTOR, O/S RR VIEW MIR (INCL 10) (PART OF 1) (10.185) ..	93-94	F (DG7, U82)	2	10241156
	9-A14	10.186	MOTOR, O/S RR VIEW MIR (INCL 10) (PART OF 1) (10.185)	94	F (DG7, UQ0, U62) ...	2	10198246

cardiagn.com

6.		N.S.	HOUSING, O/S RR VIEW MIR (PART OF 1)				
7.	9–A11	10.185	APPLIQUE, O/S RR VIEW MIR	93–94	F	RH	10294284
	9–A11	10.185	APPLIQUE, O/S RR VIEW MIR	93–94	F	LH	10294285
8.		8.917	NUT, HEX W/CON WA 6X1X5.5 16–OD ZP 9 (O/S RR VIEW MIR)	93–94		6	11517293
9.	9–A14	10.186	BEZEL, O/S RR VIEW MIR (R/CON) (INCLS 16)	93–94	F	RH	10235278
	9–A14	10.186	BEZEL, O/S RR VIEW MIR (R/CON) (INCLS 16)	93–94	F (DG7)	LH	10235279
10.	9–A11	10.185	CONNECTOR, INLINE–TO I/S RR VIEW MIR (PART OF 1, 5) (4–WAY F W/LEADS) (2.535) (AC–DELCO #PT382)	93–94	F	2	12102900
11.	9–A11	10.185	WASHER, O/S RR VIEW MIR APLQ	93–94	F	2	10165429
12.		8.900	BOLT, HFH (M6X1X20, 13 THD, 13.6 OD, 9.8 PO) (O/S RR VIEW MIR APLQ) (AC–DELCO #11517518)	93–94		4	11517518
13.		8.917	NUT, HEX W/CON WA 6X1X5.5 16–OD ZP 9 (O/S RR VIEW MIR OPG APLG)	93–94		2	11517293
14.	9–A11	10.185	CONNECTOR, INLINE–TO I/S RR VIEW MIR (BLACK) (4–WAY M) (W/LEADS) (2.535) (AC–DELCO #PT144)	93–94	F	2	12085536
15.		8.977	SCREW, OV HD C/S W/TRIM WA (4.2X1.41X30) AB PT TORX 6010M	93–94		AR	11516302
16.	9–A14	10.186	RETAINER, O/S R/CON RR VIEW MIR BZL (PART OF 9) (2.372) (AC–DELCO #456969)	93–94	F	4	456969

RPO DEFINITIONS

DG7 – MIRROR,OUTSIDE,RH AND LH REMOTE CONTROL,ELECTRIC(PAINTED)
UQ0 – SPEAKER SYSTEM,4,DUAL FRONT DOOR MOUNTED,DUAL STANDARD RANGE PACKAGE SHELF/QUARTER
U62 – SPEAKER SYSTEM,4,DUAL COAX FRONT,DUAL COAX PACKAGE SHELF
U82 – SPEAKER SYSTEM 3, DUAL DR MTD, RR PKG SHELF

cardiagn.com

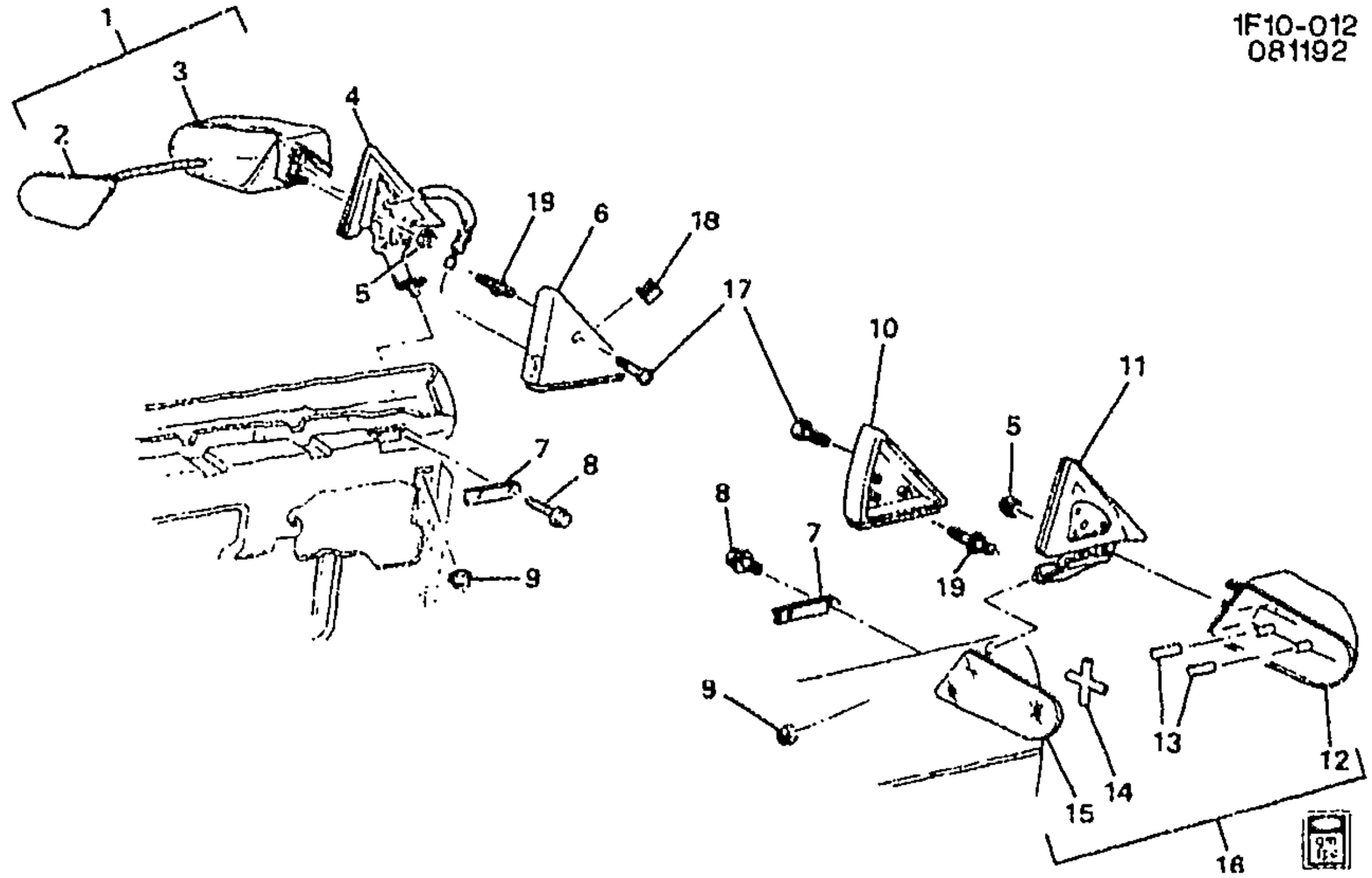

1F10-012

1993-2002 F MIRRORS/REAR VIEW (D35)

1.	9-A11	10.185	MIRROR, O/S RR VIEW (INCLS 2, 3) (PAINT TO MATCH)	93-02	F (D35)	LH	10279332
2.	9-A11	10.185	MIRROR KIT, O/S RR VIEW ("SR1" STAMPED ON BTM CTR OF GLS FACE) (PART OF 1) (GLS & TAPE, MUST REUSE OLD FRM BY BREAKING OUT OLD GLS) ...	93-02	F (D35)	LH	12528860
3.		N.S.	HOUSING, O/S RR VIEW MIR (PART OF 1)		.....		
4.	9-A11	10.185	APPLIQUE, O/S RR VIEW MIR ...	93-02	F	LH	10294285
5.		8.917	NUT, HEX W/CON WA 6X1X5.5 16-OD ZP 9 (O/S RR VIEW MIR) .	93-02	.....	6	11517293
6	9-A14	10.186	BEZEL, O/S RR VIEW MIR (R/CON) (INCLS 18, 19)	93-02	F (D35)	LH	10282729
7.	9-A11	10.185	WASHER, O/S RR VIEW MIR APLQ	93-02	F	2	10165429
8.		8.900	BOLT, HFH (M6X1X20, 13 THD, 13.6 CD, 9.8 PO) (O/S RR VIEW MIR) (AC-DELCO #11517518) ..	93-02	.....	4	11517518
9.		8.917	NUT, HEX W/CON WA 6X1X5.5 16-OD ZP 9 (O/S RR VIEW MIR OPG APLQ)	93-02	.....	2	11517293
10.	9-A14	10.186	BEZEL, O/S RR VIEW MIR (R/CON) (INCLS 19)	93-02	F	RH	10235278
11.	9-A11	10.185	APPLIQUE O/S RR VIEW MIR ...	93-02	F	RH	10294284
12.		N.S.	HOUSING, O/S RR VIEW MIR (PART OF 16)		.....		
13.		N.S.	STUD, O/S RR VIEW MIR ADJR BALL (PART OF 16)		.....		
14.		N.S.	TRUNNION, O/S RR VIEW MIR (PART OF 16)		.....		

cardiagn.com

15.	9-A11	10.185	**MIRROR KIT**, O/S RR VIEW ("SR1" STAMPED ON BTM CTR OF GLS FACE) (PART OF 16) (GLS & TAPE, MUST REUSE OLD FRM BY BREAKING OUT OLD GLS)	93-02	F (D35)	RH	12528879
16.	9-A11	10.185	**MIRROR**, O/S RR VIEW (INCLS 12-15) (PAINT TO MATCH)	93-02	F (D35)	RH	10279331
17.		8.977	**SCREW**, OV HD C/S W/TRIM WA (4.2X1.41X30) AB PT TORX 6010M	93-02	.....	4	11516302
18.		N.S.	**CLIP**, O/S R/CON RR VIEW MIR CBL (PART OF 6)		.....		
19.	9-A14	10.186	**RETAINER**, O/S R/CON RR VIEW MIR BZL (PART OF 6, 10) (2.372) (AC-DELCO #456969)	93-02	F	4	456969
	9-A14	10.186	**RETAINER**, O/S R/CON RR VIEW MIR BZL (PART OF 6, 10) (2.372) (AC-DELCO #456969)	02	F (D35)	LH	456969

RPO DEFINITIONS
D35 – MIRROR,O/S LH REM RH DIRECT CTL,PAINTED

cardiagn.com

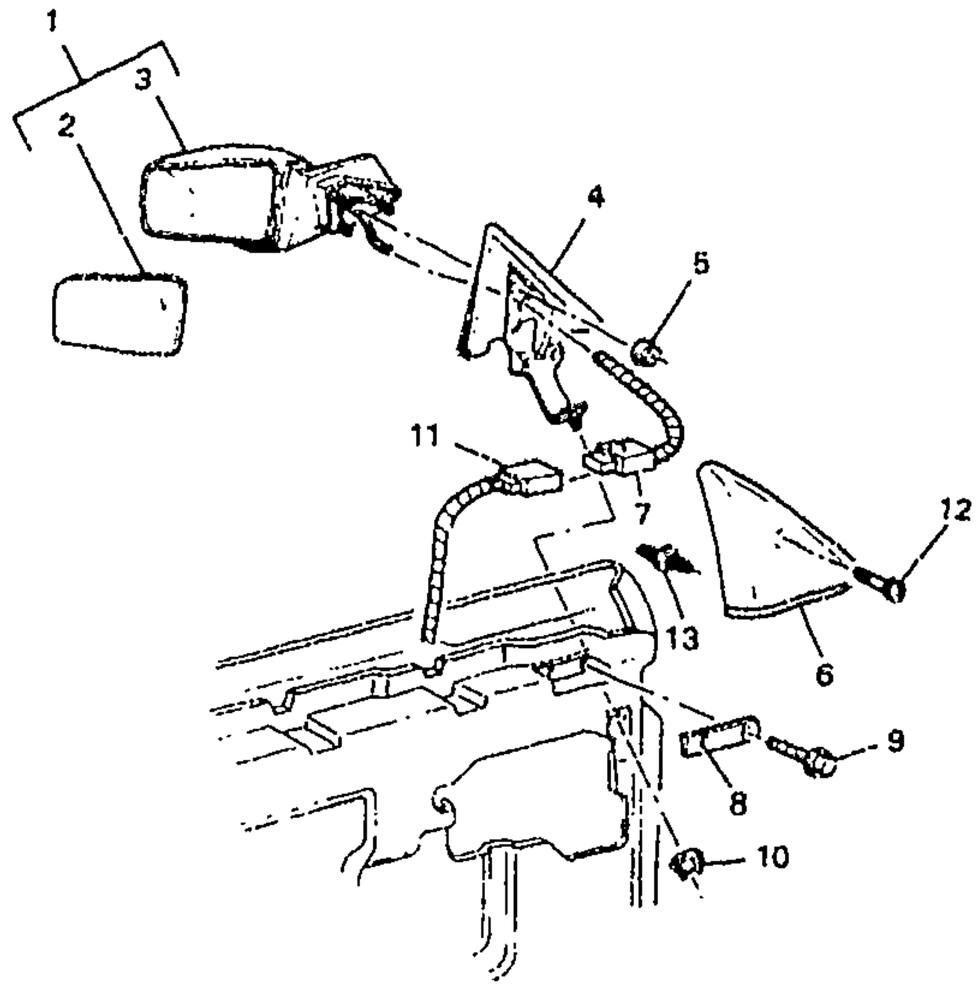

1993–2002 F MIRRORS/REAR VIEW (DD9)

1.	9–A11	10 185	MIRROR, O/S RR VIEW (INCLS 2, 3, 7) (PAINT TO MATCH)	93–98	F (DD9) (EXC Z5X) (EXPORT)	RH	10423961
	9–A11	10.185	MIRROR, O/S RR VIEW (INCLS 2, 3, 7) (PAINT TO MATCH)	93–98	F (DD9) (EXC Z5X) (EXPORT)	LH	10423962
	9–A11	10.185	MIRROR, O/S RR VIEW (INCLS 2, 3, 7) (PAINT TO MATCH)	97–02	F (DD9, Z5X) (EXPORT)	RH	10296900
	9–A11	10.185	MIRROR, O/S RR VIEW (INCLS 2, 3, 7) (PAINT TO MATCH)	97–01	F (DD9, Z5X) (EXPORT)	LH	10296901
	9–A11	10.185	MIRROR, O/S RR VIEW (INCLS 2, 3, 7) (PAINT TO MATCH) (BLUE TINT GLASS) (FOR 2ND DESIGN SEE 10428099)	99	F (DD9) (EXC Z5X) (1ST DES) (EXPORT) ..	RH	10423961
	9–A11	10.185	MIRROR, O/S RR VIEW (INCLS 2, 3, 7) (PAINT TO MATCH) (BLUE TINT GLASS) (FOR 2ND DESIGN SEE 10428100)	99	F (DD9) (EXC Z5X) (1ST DES) (EXPORT) .	LH	10423962
	9–A11	10.185	MIRROR, O/S RR VIEW (INCLS 2, 3, 7) (PAINT TO MATCH) (CLEAR GLASS) (FOR 1ST DESIGN SEE 10423961)	99	F (DD9) (EXC Z5X) (2ND DES) (EXPORT) ..	RH	10428099
	9–A11	10.185	MIRROR, O/S RR VIEW (INCLS 2, 3, 7) (PAINT TO MATCH) (CLEAR GLASS) (FOR 1ST DESIGN SEE 10423962)	99	F (DD9) (EXC Z5X) (2ND DES) (EXPORT) ..	LH	10428100
	9–A11	10.185	MIRROR, O/S RR VIEW (INCLS 2, 3, 7) (PAINT TO MATCH)	00–02	F (DD9) (EXC Z5X) (EXPORT)	RH	10428099
	9–A11	10.185	MIRROR, O/S RR VIEW (INCLS 2, 3, 7) (PAINT TO MATCH)	00–02	F (DD9) (EXC Z5X) (EXPORT)	LH	10428100

cardiagn.com

2.	9–A11	10.185	**MIRROR KIT**, O/S RR VIEW (PART OF 1) (GLS & TAPE, MUST REUSE OLD FRM BY BREAKING OUT OLD GLS)	93–02	F	RH	12528879
	9–A11	10.185	**MIRROR KIT**, O/S RR VIEW (PART OF 1) (GLS & TAPE, MUST REUSE OLD FRM BY BREAKING OUT OLD GLS)	93–02	F	LH	12528880
3.		N.S.	**HOUSING**, O/S RR VIEW MIR (PART OF 1)				
4.	9–A11	10.185	**APPLIQUE**, O/S RR VIEW MIR	93–02	F	RH	10294284
	9–A11	10.185	**APPLIQUE**, O/S RR VIEW MIR	93–02	F	LH	10294285
5.		8.917	**NUT**, HEX W/CON WA 6X1X5.5 16–OD ZP 9 (O/S RR VIEW MIR)	93–02		6	11517293
6.	9–A14	10.186	**BEZEL**, O/S RR VIEW MIR (R/CON) (INCLS 13)	93–02	F	RH	10235278
	9–A14	10.186	**BEZEL**, O/S RR VIEW MIR (R/CON) (INCLS 13)	99–02	F (DD9, DG7)	LH	10235279
	9–A14	10.186	**BEZEL**, O/S RR VIEW MIR (R/CON) (INCLS 13)	93–98	F (DD9) (EXPORT)	LH	10235279
7.	9–A11	10.185	**CONNECTOR**, INLINE–TO I/S RR VIEW MIR (PART OF 1) (4–WAY F W/LEADS) (2.535) (AC–DELCO #PT382)	93–02	F	2	12102900
8.	9–A11	10.185	**WASHER**, O/S RR VIEW MIR APLQ	93–02	F	2	10165429
9.		8.900	**BOLT**, HFH (M6X1X20, 13 THD, 13.6 OD, 9.8 PO) (O/S RR VIEW MIR APLQ) (AC–DELCO #11517518)	93–02		4	11517518
10.		8.917	**NUT**, HEX W/CON WA 6X1X5.5 16–OD ZP 9 (O/S RR VIEW MIR OPG APLQ)	93–02		2	11517293
11.	9–A14	10.186	**CONNECTOR**, SW–O/S RR VIEW MIR R/CON (BLACK) (4–WAY M) (W/LEADS) (2.535) (AC–DELCO #PT144)	93–02	F		12085536
12.		8.977	**SCREW**, OV HD C/S W/TRIM WA (4.2X1.41X30) AB PT TORX 6010M	93–02		2	11516302
13.	9–A14	10.186	**RETAINER**, O/S R/CON RR VIEW MIR BZL (PART OF 6) (2.372) (AC–DELCO #456969)	93–02	F		456969

RPO DEFINITIONS

DD9 – MIRROR,OUTSIDE,RH AND LH REMOTE CONTROL ELECTRIC,BREAKAWAY(PAINTED)
DD9 – MIRROR,O/S,RH & LH REM CTL ELEC,BREAKAWAY(PAINTED)(EXPORT)
DG7 – MIRROR,OUTSIDE,RH AND LH REMOTE CONTROL,ELECTRIC(PAINTED)
Z5X – MIRROR PROVISIONS ARABIC LANGUAGE(EXPORT)

cardiagn.com

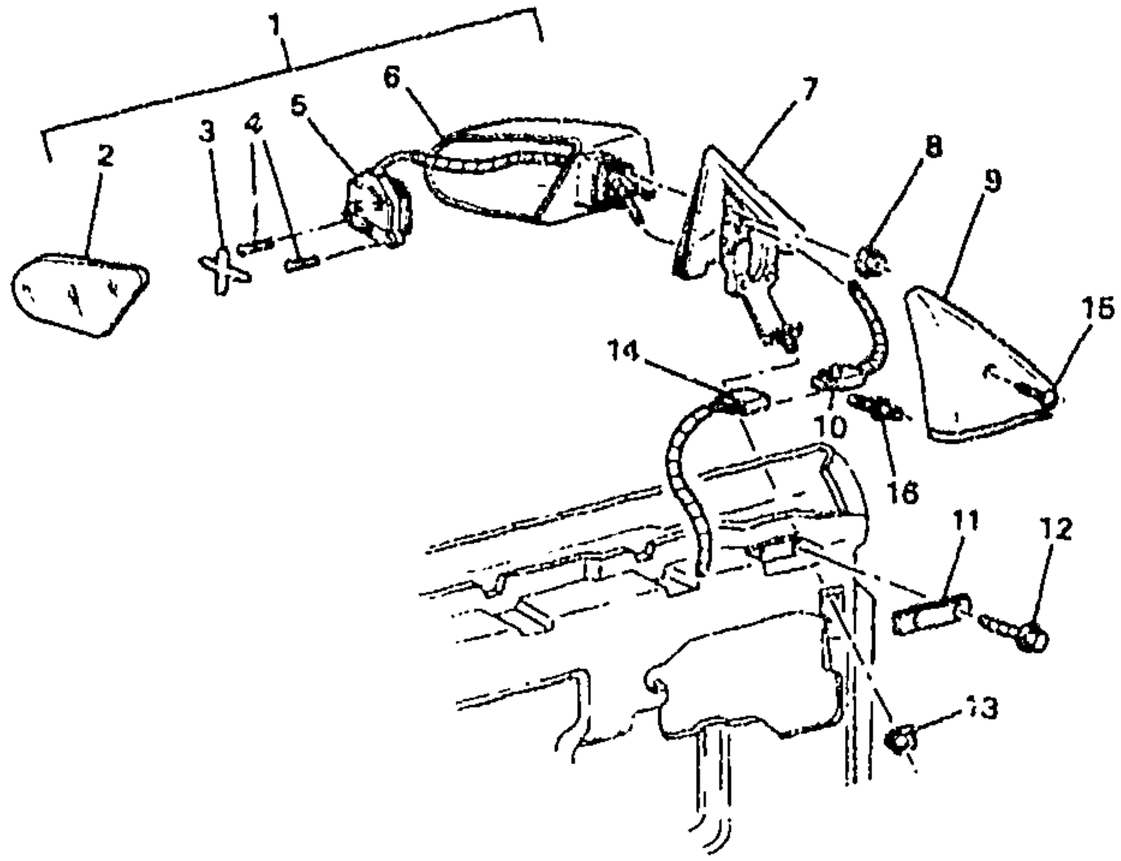

1F10-0141

1995-2002 F MIRRORS/REAR VIEW (DG7)

1.	9-A11	10.185	MIRROR, O/S RR VIEW (INCLS 2-6, 10) (PAINT TO MATCH)	95-96	F (DG7, UQ0 U62)	RH	10279357
	9-A11	10.185	MIRROR, O/S RR VIEW (INCLS 2-6, 10) (PAINT TO MATCH)	95-96	F (DG7, UQ0, U62)	LH	10279358
	9-A11	10.185	MIRROR, O/S RR VIEW (INCLS 2-6, 10) (PAINT TO MATCH)	95-96	F (DG7, U65)	RH	10279359
	9-A11	10.185	MIRROR, O/S RR VIEW (INCLS 2-6, 10) (PAINT TO MATCH)	95-96	F (DG7, U65)	LH	10279360
	9-A11	10.185	MIRROR, O/S RR VIEW (INCLS 2-6, 10) (PAINT TO MATCH)	97-02	F (DG7)	RH	10279357
	9-A11	10.185	MIRROR, O/S RR VIEW (INCLS 2-6, 10) (PAINT TO MATCH)	97-02	F (DG7)	LH	10279358
2.	9-A11	10.185	MIRROR, O/S RR VIEW (REFL GLASS ONLY) (PART OF 1)	96-02	F (DG7)	RH	10279513
	9-A11	10.185	MIRROR, O/S RR VIEW (REFL GLASS ONLY) (PART OF 1)	96-02	F (DG7)	LH	10279514
	9-A11	10.185	MIRROR, O/S RR VIEW (REFL GLASS ONLY) (NO ID ON GLS FACE) (PART OF 1)	95	F (DG7) (2ND DES)	RH	10279513
	9-A11	10.185	MIRROR, O/S RR VIEW (REFL GLASS ONLY) (NO ID ON GLS FACE) (PART OF 1)	95	F (DG7) (2ND DES)	LH	10279514
3.	9-A11	10.185	TRUNNION, O/S RR VIEW MIR (PART OF 1)	95-02	F (DG7)	2	12522163
4.		N.S.	STUD, O/S RR VIEW MIR ADJR BALL (PART OF 1)		....		
5.	9-A14	10.186	MOTOR, O/S RR VIEW MIR (INCLS 10) (PART OF 1) (10.185) .	96-02	F (DG7)	RH	12530165
	9-A14	10.186	MOTOR, O/S RR VIEW MIR (INCLS 10) (PART OF 1) (10.185) .	96-02	F (DG7)	LH	12530166
	9-A14	10.186	MOTOR, O/S RR VIEW MIR (NO ID STAMP ON CASE) (INCLS 10) (PART OF 1) (10.185)	95	F (DG7) (2ND DES)	RH	12530165

cardiagn.com

	9–A14	10.186	MOTOR, O/S RR VIEW MIR (NO ID STAMP ON CASE) (INCLS 10) (PART OF 1) (10.185)	95	F (DG7) (2ND DES)	LH	12530166
	9–A14	10.186	MOTOR, O/S RR VIEW MIR (SR1 STAMPED ON CASE) (INCLS 10) (PART OF 1) (10.185)	95	F (DG7, UQ0, U62) (1ST DES)	2	10198246
	9–A14	10.186	MOTOR, O/S RR VIEW MIR (SR1 STAMPED ON CASE) (INCLS 10) (PART OF 1) (10.185)	95	F (DG7, U82) (1ST DES)	2	10241156
6.		N.S.	HOUSING, O/S RR VIEW MIR (PART OF 1)		.....		
7.	9–A11	10.185	APPLIQUE, O/S RR VIEW MIR ...	95–02	F	RH	10294284
	9–A11	10.185	APPLIQUE, O/S RR VIEW MIR ...	95–02	F	LH	10294285
8.		8.917	NUT, HEX W/CON WA 6X1X5.5 16–OD ZP 9 (O/S RR VIEW MIR) .	95–02	.....	6	11517293
9.	9–A14	10.186	BEZEL, O/S RR VIEW MIR (R/CON) (INCLS 16)	95–02	F	RH	10235278
	9–A14	10.186	BEZEL, O/S RR VIEW MIR (R/CON) (INCLS 16)	95–98	F (DG7)	LH	10235279
	9–A14	10.186	BEZEL, O/S RR VIEW MIR (R/CON) (INCLS 16)	99–02	F (DD9, DG7)	LH	10235279
10.	9–A11	10.185	CONNECTOR, INLINE–TO I/S RR VIEW MIR (PART OF 1, 5) (4–WAY F W/LEADS) (2.535) (AC–DELCO #PT382)	95–02	F	2	12102900
11.	9–A11	10.185	WASHER, O/S RR VIEW MIR APLQ	95–02	F	2	10165429
12.		8.900	BOLT, HFH (M6X1X20, 13 THD, 13.6 OD, 9.8 PO) (O/S RR VIEW MIR APLQ) (AC–DELCO #11517518)	95–02	....	4	11517518
13.		8.917	NUT, HEX W/CON WA 6X1X5.5 16–OD ZP 9 (O/S RR VIEW MIR OPG APLG)	95–02	....	2	11517293
14.	9–A14	10.186	CONNECTOR, SW–O/S RR VIEW MIR R/CON (BLACK) (4–WAY M) (W/LEADS) (2.535) (AC–DELCO #PT144)	95–02	F	2	12085536
15.		8.977	SCREW, OV HD C/S W/TRIM WA (4.2X1.41X30) AB PT TORX 6010M	95–02	....	4	11516302
16.	9–A14	10.186	RETAINER, O/S R/CON RR VIEW MIR BZL (PART OF 9) (2.372) (AC–DELCO #456969)	95–02	FA		456969

RPO DEFINITIONS

DD9 – MIRROR,OUTSIDE,RH AND LH REMOTE CONTROL ELECTRIC,BREAKAWAY(PAINTED)
DG7 – MIRROR,OUTSIDE,RH AND LH REMOTE CONTROL,ELECTRIC(PAINTED)
UQ0 – SPEAKER SYSTEM,4,DUAL FRONT DOOR MOUNTED,DUAL STANDARD RANGE PACKAGE SHELF/QUARTER
U62 – SPEAKER SYSTEM,4,DUAL COAX FRONT,DUAL COAX PACKAGE SHELF
U65 – SPEAKER SYSTEM,5,DUAL FRT DR MTD,DUAL EXT RANGE SAIL PANEL,SINGLE RR COMPARTMENT
U82 – SPEAKER SYSTEM 3, DUAL DR MTD, RR PKG SHELF

cardiagn.com

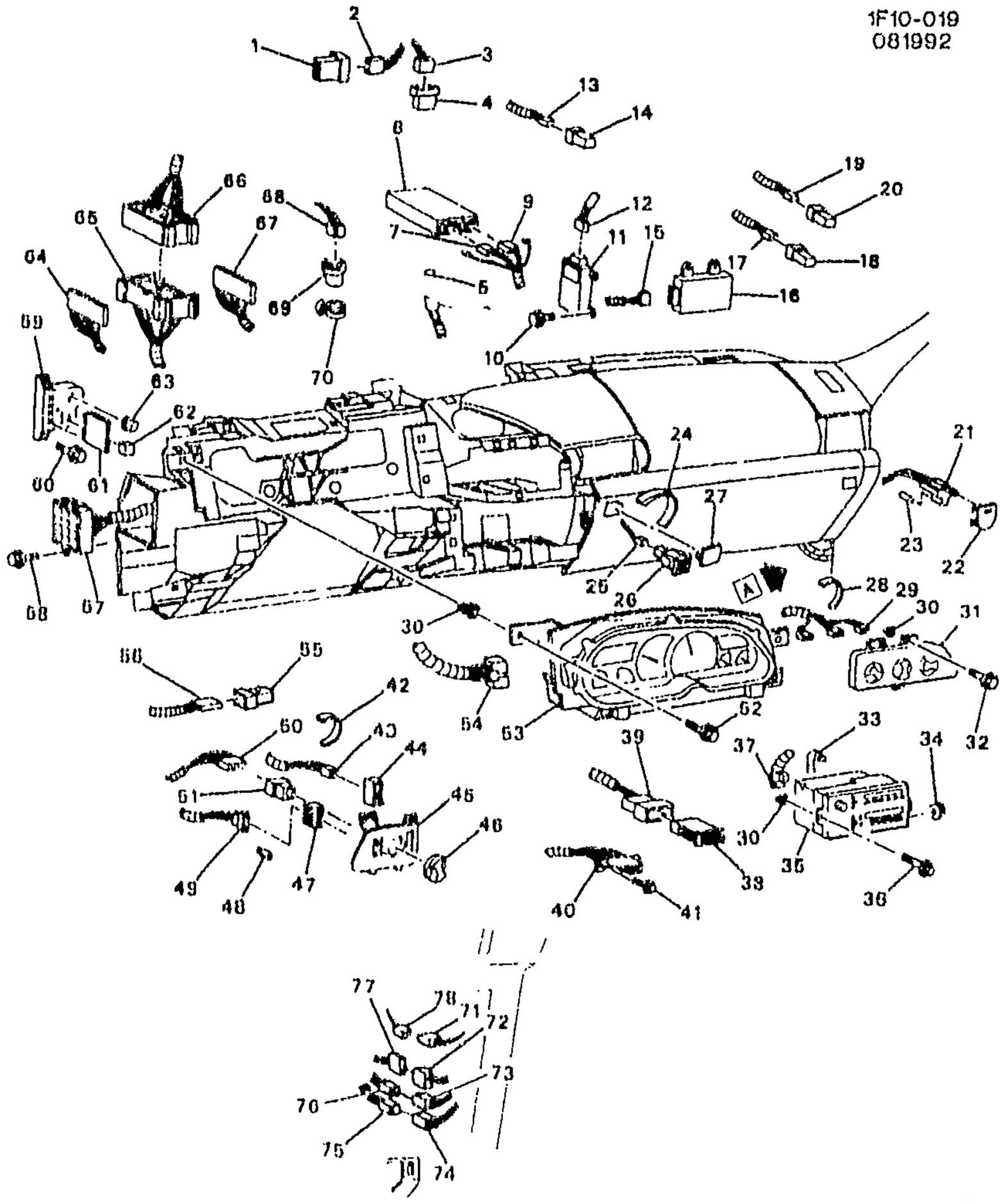

AT RH HINGE PILLAR
VIEW A

1993 F INSTRUMENT PANEL PART 2

1.	0-B10	10.777	MODULE, P/W CONT (EXPRESS DOWN)	93 F	1	12182126
2.	0-B10	10.777	CONNECTOR, MDL -P/W CONT	93 F	1	12117399

cardiagn.com

3.	9-A28	10.485	CONNECTOR, MDL-RETAINED ACSRY PWR (BLACK) (7-WAY F) (W/LEADS) (10.163) (AC-DELCO #PT547)	93	F	1	12125635
4.	9-A28	10.485	MODULE, RETAINED ACRSY PWR	93	F	1	12135089
5.	9-M9	2.485	SENSOR, DAYTIME RUNNING LP AMB LGT	93	F (T61) (EXPORT)	1	10067986
6.	9-M17	2.727	SOCKET, DAYTIME RUNNING LP (W/LEADS, USES 09421330/L194 BULB) (2.485) (AC-DELCO #LS71)	93	F (T61) (EXPORT)	1	12167138
7.	9-M9	2.485	CONNECTOR, MDL-DAYTIME RUNNING LP CONT (BLACK) (8-WAY F W/LEADS, 7-12GA & 4-18GA AS REQ) (2.535) (AC-DELCO #PT1346)	93	F87 (T61)	1	15306189
8.	9-M9	2.485	MODULE, HDLP AUTO CONT (LESS BRKT & BOLTS)	93	F (T61) (EXPORT)	1	10098712
9.	9-M9	2.485	CONNECTOR, MDL-DAYTIME RUNNING LP CONT (BLUE) (8-WAY F) (W/LEADS) (2.535) (AC-DELCO #PT266)	93	F87 (T61)	1	12101875
10.		8.900	BOLT/SCREW, HWH W/FL WA M4.2X1.41X20, 6010M, 7253M, 12.5 OD, DOG PT (THEFT DTRNT MDL) (8.977)	93		2	11509709
11.	9-M6	2.195	MODULE, THEFT DTRNT (FOR PASS KEY SYSTEM)	93	F	1	16215659
12.		N.S.	CONNECTOR, MDL-THEFT DTRNT				
13.	9-N7	9.050	CONNECTOR, RDO SPKR AMPF RLY (BLACK) (6-WAY F) (W/O LEADS) (3.900)	93	F	1	12110541
14.	9-N7	9.650	RELAY, RDO SPKR AMPF (BLACK) (5-WAY M) (USED W/CONNECTOR 15306045) (W/OUT BRKTS) (9.277) (AC-DELCO #15-8719)	93	F	1	12193601
	9-M10	2.510	RELAY, RDO SPKR AMPF (BLACK) (5-WAY M) (USED W/CONNECTOR 15306045) (W/OUT BRKTS) (9.277) (AC-DELCO #15-8719)	93	F (U82)	1	12193601
15.	9-N26	14.865	CONNECTOR, MDL-INFL RST DIAGN ENGY RESV (24-WAY F) (W/LEADS) (AC-DELCO #PT1216)	93	F	1	12167101
16.	9-N26	14.865	MODULE, INFL RST DIAGN ENGY RESV (REMAN) (AC-DELCO #16150340) (FOR PROD #16139070, SEE PART #ON LBL)	93	F (AK5) (1ST DES)	1	16150340
	9-N26	14.865	MODULE, INFL RST DIAGN ENGY RESV (REMAN) (FOR PROD #16193430, SEE PART #ON LBL)	93	F (AK5) (2ND DES)	1	16176558

cardiagn.com

17.	9-N16	12.243	**CONNECTOR**, RLY-R/CMPT LID REL (BLACK) (6-WAY F) (W/O LEADS) (3.900)	93 F	1	12110541
18.	9-N16	12.243	**RELAY**, R/CMPT LID REL (BLACK) (5-WAY M) (USED W/CONNECTOR 15306045) (W/OUT BRKTS) (9.277) (AC-DELCO #15-8719)	93 F	1	12193601
19.	9-M6	2.195	**CONNECTOR**, RLY-THEFT DTRNT (BLACK) (6-WAY F) (W/O LEADS) (3.900)	93 F	1	12110541
20.	9-M6	2.195	**RELAY**, THEFT DTRNT (STARTER ENABLE) (BLACK) (5-WAY M) (USED W/CONNECTOR 15306045) (W/OUT BRKTS) (9.277) (AC-DELCO #15-8719)	93 F	1	12193601
21.	9-A26	10.275	**SOCKET**, I/P COMPT LP (W/SW) (AC-DELCO #LS55)	93 F	1	12159663
22.	9-A26	10.275	**RETAINER**, I/P COMPT LP	93 F	1	12089143
23.		8.991	**TRADE#194**, 12V, 2CP (GLOVE BOX LP) (AC-DELCO #L194)	93	1	9421330
24.	9-M11	2.530	**INSULATOR**, I/P WRG HARN (FOR HATCH REL CONN) (14.865)	93 F (EXC A90)	1	14099517
25.	9-N16	12.243	**CONNECTOR**, SW-R/CMPT LID REL (GRAY) (2-WAY F W/LEADS) (INDEX TAB CTR CAVITY A&B) (2.535) (AC-DELCO #PT217)	93 F	1	12101825
26.	9-N16	12.243	**SWITCH**, R/CMPT LID REL	93 F (A90)	1	10060578
27.	9-N16	12.243	**PLUG**, R/CMPT LID REL SW OPG	93 F (EXC A90)	1	10227567
28.	9-M11	2.530	**INSULATOR**, I/P WRG HARN (FOR HVAC ILLUM CONN) (14.865)	93 F	1	14099517
29.	9-N4	8.852	**CONNECTOR**, BLO CONT HARN (2-WAY F) (9.215) (AC-DELCO #PT275)	93 F	1	12102484
30.	9-N11	9.667	**NUT**, RDO BRKT (M4 2X1.41) (PUSH-IN FOR 12MM SQ HOLE) (10.252)	93 F	2	17988488
31.	9-N4	8.849	**CONTROL**, HTR (SEE "HEATER CONTROL SYSTEM" ILLUSTRATION IN GRP 8.000 FOR DETAILED VIEW.) (AC-DELCO #15-72269)	93 F (C41)	1	16190421
	9-N5	9.273	**CONTROL**, HTR & A/C (SEE "A/C CONTROL SYSTEM" ILLUSTRATION IN GRP 9.000 FOR DETAILED VIEW.) (AC-DELCO #15-72041)	93 F (C60)	1	16190411
32.		8.900	**BOLT/SCREW**, HWH W/FL WA M4.2X1.41X20, 6010M, 7253M, 12.5 OD, DOG PT (HTR & A/C CONT) (8.977)	93	3	11509709
33.	9-N7	9.647	**CABLE**, RDO ANT (4670MM) (AC-DELCO #12103391)	93 F	1	12103391

cardiagn.com

34.		8.917	NUT, CONICAL SPR WA HEX (METRIC STYLE 2) M5 X 0.86N 4 (RDO BRKT)	93		2	11503647
35.		N.S.	RADIO PKG, (AVAILABLE ONLY THROUGH A/C DELCO SERVICE CENTERS)	93			
		N.S.	RADIO, (REMAN) (AVAILABLE ONLY THROUGH A/C DELCO SERVICE CENTERS)				
36.		8.900	BOLT/SCREW, HWH W/FL WA M4.2X1.41X20, 6010M, 7253M, 12.5 OD, DOG PT (RDO BRKT) (8.977)	93		2	11509709
37.	9–N10	9.656	CONNECTOR, RDO (BLACK) (10–WAY F) (W/LEADS) (2.535) (AC–DELCO #PT108)	93	F	1	12085486
	9–N10	9.656	CONNECTOR, RDO (BLACK) (7–WAY F, W/LEADS) (2.535) (AC–DELCO #PT406)	93	F	1	12102778
38.	9–N15	9.778	SWITCH, R/WDO DEFG (AC–DELCO #D7100)	93	F (C49)	1	10145827
39.	9–N15	9.778	CONNECTOR, SW–R/WDO DEFG (RED) (5–WAY F, W/O LEADS)	93	F87	1	12059296
40.	9–M11	2.530	CONNECTOR, I/P WRG HARN DATA LINK CONN BYPASS (12–WAY F) (W/LEADS) (2.535) (AC–DELCO #PT190)	93	F	1	12101918
41		8.977	BOLT, SCR HEX W/FLAT WA 12 DIA TYPE AB (I/P WRG HARN ECM DATA LINK CONN)	93		2	11509374
42.	9–M11	2.530	INSULATOR, I/P WRG HARN (FOR FOG LP CONN) (14.865)	93	F (EXC T96)	1	14099517
43.	9–M9	2.485	CONNECTOR, SW–FOG LP (GRAY) (6–WAY F W/LEADS) (4.663)	93	F	1	12125665
44.		N.S.	SWITCH, FOG LP				
45.		DISCON	BEZEL, HDLP SW	93	F (EXC T96)	1	10195529
46.	9–M10	2.486	KNOB, HDLP SW	93	F	1	10195526
47.	9–M10	2.490	SWITCH, I/P LP DIMR (AC–DELCO #D1557D)	93	F (EXC T96)	1	10195547
48.		8.991	BULB, HDLP SW IND LP (HDLP SW)	93		1	10195525
49.	9–M10	2.490	CONNECTOR, SW–I/P LP DIMR (4–WAY F) (W/LEADS) (AC–DELCO #PT544)	93	F	1	12125632
	9–M10	2.490	CONNECTOR, SW–I/P LP DIMR (2–WAY F W/LEADS, W/INDEX TAB OTR EDGE OF CAVITY B) (2.535) (AC–DELCO #PT146)	93	F87 (Z49) (EXPORT)	1	12085535
50.		N.S.	CONNECTOR, SW–HDLP				
51.	9–M9	2.485	SWITCH, HDLP (AC–DELCO #D1562D)	93	F	1	10195524
52.		8.900	BOLT/SCREW, HWH W/FL WA M4.2X1.41X20, 6010M, 7253M, 12.5 OD, DOG PT (INST CSTR) (8.977)	93		4	11509709

cardiagn.com

53.		N.S.	**CLUSTER**, INST (REMAN) (AVAILABLE THROUGH AC DELCO SERVICE CENTERS)		.....		
54.	9–N12	9.735	**CONNECTOR**, CSTR–INST (32–WAY F, W/O TERM LKS) (3.670)	93	F	1	12045575
55.	9–M24	3.900	**RELAY**, F/PMP (BLACK) (5–WAY M) (USED W/CONNECTOR 15306045) (W/OUT BRKTS) (9.277) (AC–DELCO #15–8719)	93	F	1	12193601
56.	9–M24	3.900	**CONNECTOR**, RLY–F/PMP (BLACK) (6–WAY F) (W/O LEADS)	93	F	1	12110541
57.		N.S.	**BLOCK**, FUSE		.....		
58.		8.900	**BOLT/SCREW**, HWH W/FL WA M4.2X1.41X20, 6010M, 7253M, 12.5 OD, DOG PT (I/P WRG HARN FUSE BLK) (8.977)	93	.....	1	11509709
59.		N.S.	CONVENIENCE CENTER		.....		
60.		8.977	**BOLT**, SCR HEX W/FLAT WA 12 DIA TYPE AB (I/P WRG CONVENIENCE CTR)	93	.....	2	11509374
61.	9–M6	2.195	**ALARM**, ST BELT & IGN KEY & LPS (CHIME WIRING SIGNAL) ...	93	F (2ND DES)	1	14101255
	9–N14	9.765	**ALARM**, ST BELT & IGN KEY & LPS (CHIME WIRING SIGNAL) (2.195)	93	F (2ND DES)	1	14101255
	9–M6	2.195	**ALARM**, ST BELT & IGN KEY & LPS (TONE WIRING SIGNAL)	93	F (1ST DES)	1	10063474
	9–N14	9.765	**ALARM**, ST BELT & IGN KEY & LPS (TONE WIRING SIGNAL) (2.195)	93	F (1ST DES)	1	10063474
62.	9–M18	2.815	**RELAY**, HORN (LITTLE FUSE MANIF) (AC–DELCO #D1776) ..	93	F	1	25523703
63.	9–M17	2.575	**FLASHER**, HAZARD LP (1 1/2" DIA) (6 LP FLSHR) (AC–DELCO #SF552) (1 1/2" DIA, 6 LP FISHER)	93	F	1	491391
64.		N.S.	**CONNECTOR**, INLINE–TO CROSSBODY HARN		.....		
65.	9–M11	2.530	**CONNECTOR**, INLINE–TO I/P HARN (FWD LP) (18–WAY F)	93	F		12084183
66.		N.S.	**CONNECTOR**, 48 WAY		.....		
67.		N.S.	**CONNECTOR**, INLINE–TO I/P HARN (FWD LP)		.....		
68.	9–M18	2.892	**CONNECTOR**, FLSHR–T/SIG LP (BLACK) (2–WAY F) (W/LEADS) (2.575) (AC–DELCO #PT663) ...	93	F	1	12126032
69.	9–M18	2.892	**FLASHER**, T/SIG LP (YELLOW) (2 LP FLSHR) (AC–DELCO #SF224)	93	F (EXC T90)	1	10041074
70.	9–M18	2.892	**CLIP**, T/SIG LP FLSHR	93	F	1	25534019
71.		N.S.	**CONNECTOR**, INLINE–TO CROSSBODY HARN (4 PIN)		.. ..		
		N.S.	**CONNECTOR**, INLINE–TO CROSSBODY HARN (6 PIN)		....		
72.	9–M11	2.530	**CONNECTOR**, INLINE–TO ENG	93	F		12124092

cardiagn.com

73.	9-M11	2.530	CONNECTOR, INLINE-TO ENG HARN (NATURAL) (10-WAY M W/LEADS) (2.535) (AC-DELCO #PT215)	93	F	1	12101823
74.		N.S.	CONNECTOR, INLINE-TO ENG HARN (BLUE)		.....		
75.	9-M11	2.530	CONNECTOR, INLINE-TO I/P HARN (BLUE) (10-WAY F) (W/LEADS) (AC PT224) (2.535) (AC-DELCO #PT224)	93	F	1	12101832
76.	9-M11	2.530	CONNECTOR, INLINE-TO I/P HARN (10-WAY F W/LEADS) (2.535) (AC-DELCO #PT150) ...	93	F	1	12101762
77.	9-M11	2.530	CONNECTOR, INLINE-TO I/P HARN (4 CAV F FLAT) (4-WAY F) (W/LEADS) (2.535) (AC-DELCO #PT109)	93	F	1	12085487
78.	9-M11	2.530	CONNECTOR, INLINE-TO I/P HARN (BLACK) (4-WAY F W/LEADS) (2.535) (AC-DELCO #PT1232)	93	F	1	12085208
	9-M11	2.530	CONNECTOR, INLINE-TO I/P HARN (6-WAY F W/LEADS) (13.090) (AC-DELCO #PT1032) .	93	F	1	15305888

RPO DEFINITIONS

AK5 - RESTRAINT SYSTEM,FRONT SEAT,INFLATABLE,DRIVER AND PASSENGER
AS0 - LOCK,REAR COMPARTMENT LID,REMOTE CONTROL,ELECTRIC RELEASE
C41 - HEATER,OUTSIDE AIR,WITH FAN AND DEFROSTER
C49 - DEFOGGER,REAR WINDOW,ELECTRIC
C60 - AIR CONDITIONER,FRONT,MANUAL CONTROLS
T61 - LIGHTING,DAYTIME RUNNING
T90 - LAMP,SIGNALING AND MARKER(EXPORT)
T96 - LAMP,FRONT FOG
U82 - SPEAKER SYSTEM 3, DUAL DR MTD, RR PKG SHELF
Z49 - MANDATORY CANADIAN BASE EQUIPMENT MODIFICATIONS(CANADIAN)

cardiagn.com

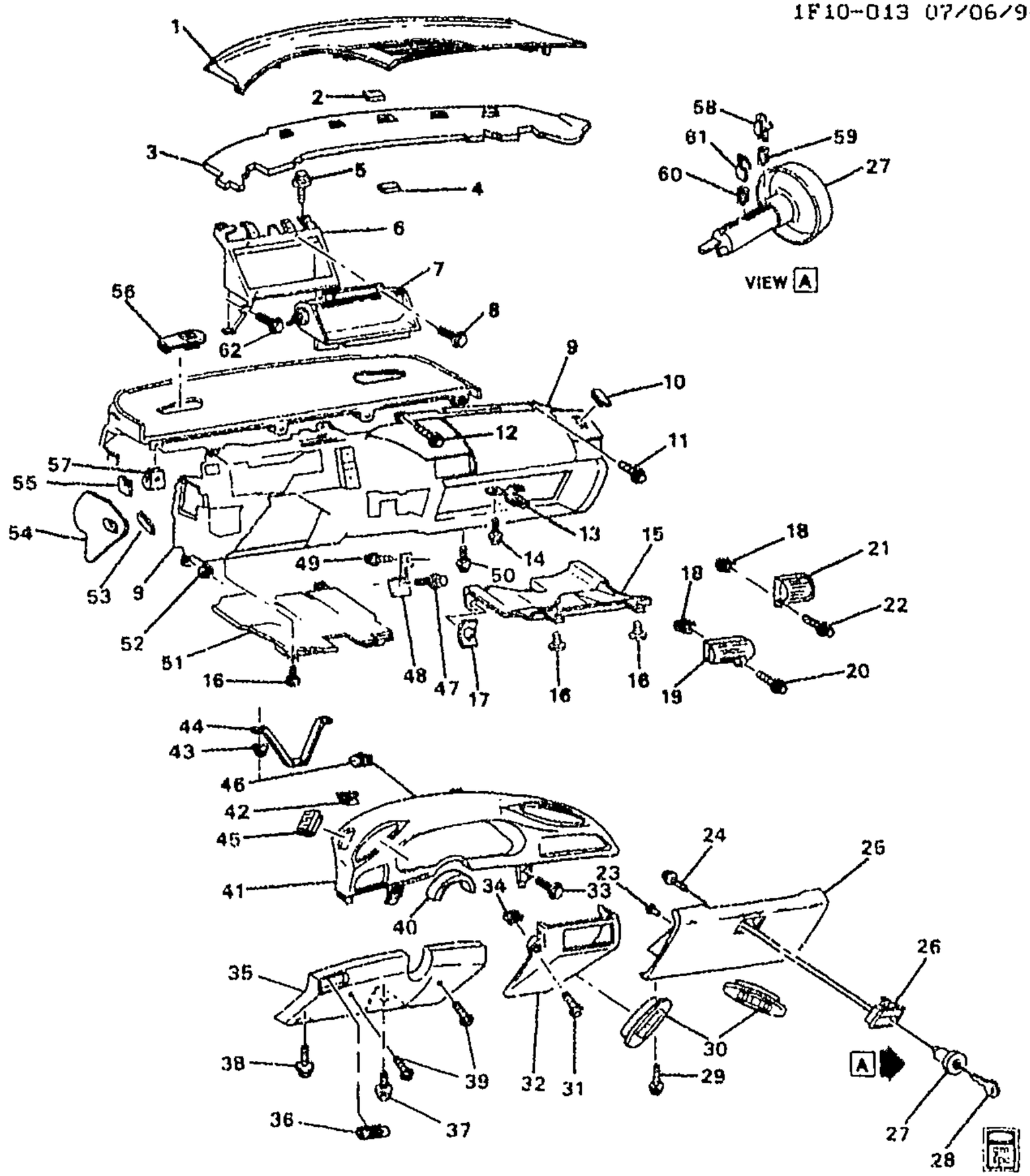

1F10-013

1993-1996 F INSTRUMENT PANEL PART 1

NOTE: FOR INFORMATION ON AIR DUCTS SEE A/C AIR DISTRIBUTION SYSTEM ILLUSTRATION IN GROUP 9.000.

1.	9-A18	10.230	PANEL, I/P UPR TR	93-96	F	1	10267171
2.		8.958	TAPE, DUAL LK FSTN (44.5MM X 44.5MM - 5 PER PKG) (I/P) (2 483)	93-96		1	12520053
3.	9-N17	12.804	BARRIER, DA SND	93-96	F	1	10252000
4.		8.958	TAPE, DUAL LK FSTN (44.5MM X 44.5MM - 5 PER PKG) (I/P UPR T/PNL FSTN) (2.483)	93-96		5	12520053
5.		8.977	SCREW, 6.3X1.81X20 (INFL RST CONT MDL BRKT)	93-96		2	11509051
6.	9-N26	14.865	BRACKET, I/P INFL RST MDL	93-96	F (AK5)	1	10267167

cardiagn.com

			AIRBAG DR)				
8.		8.900	**BOLT/SCREW**, HWH W/FL WA M4.2X1.41X20, 6010M, 7253M, 12.5 OD, DOG PT (INFL RST I/P MDL) (8.977)	93–96		4	11509709
9.	9–A18	10.230	**PANEL**, INST (INCLS DR FOR PASS SI AIR BAG WHICH IS NOT SERVICED SEPARATELY) (INCLUDES DOOR FOR PASS SIDE AIR BAG WHICH IS NOT SERVICED SEPERATELY.) (W/PASS SI INFL RST CVR)	93–96	F	1	16760171
10.	9–N15	9.780	**GRILLE**, SI WDO DEFG OTLT	93–96	F	1	17997588
11.		8.977	**SCREW**, HWH TAP 4.2 X 1.41 X 25 (I/P) (10.783)	93–96		1	1640810
		8.929	**WASHER**, FLAT 5MM PEOR (I/P)	93–96		1	11508426
12.		8.900	**BOLT/SCREW**, HWH W/FL WA M4.2X1.41X20, 6010M, 7253M, 12.5 OD, DOG PT (I/P) (8.977)	93–96		4	11509709
13.	9–A25	10.268	**STRIKER**, I/P COMPT DR LAT	93–96	F	1	17997894
14.		8.977	**BOLT**, SCR HEX W/FLAT WA 12 DIA TYPE AB (I/P COMPT DR LAT STKR)	93–96		2	11509374
15.	9–A18	10.230	**INSULATOR**, I/P (TRIM OFF TAB LOC TO RT OF GLOVE BOX HGE, WHEN INSTL FOR 93–94)	93–96	F	RH	10270975
16.	9–A18	10.230	**RETAINER**, I/P INSL (CHRISTMAS TREE TYPE) (15.100)	93–96	F	3	10193261
17.	9–A18	10.230	**RETAINER**, I/P INSL (PUSH–ON)	93–96	F	RH	10220726
18.	9–N15	9.786	**NUT** AIR DISTR DUCT (M4.2X1.41) (PUSH–IN FOR 12MM SQ HOLE) (10.252)	93–96	F	5	17988488
19.	9–N5	9.262	**OUTLET**, I/P CTR AIR (LOCATED TO RIGHT OF I/P CSTR TR PLT BEZEL)	93–96	F	1	17997611
20.		8.977	**BOLT**, SCR HEX W/FLAT WA 12 DIA TYPE AB (I/P CTR AIR OTLT)	93–96		1	11509374
21.	9–N5	9.262	**OUTLET**, I/P OTR AIR	93–96	F	1	17997612
22.		8.977	**BOLT**, SCR HEX W/FLAT WA 12 DIA TYPE AB (I/P OTR AIR OTLT)	93–96		1	11509374
23.	9–A25	10.263	**BUMPER**, I/P COMPT DR	93–96	F	2	10276643
24.		8.900	**BOLT**, HWH THD ROLLER 4X0.7X10 9.2–OD FULL THD 6171M ZP (I/P COMPT DR LK CYL CASE)	93–96		2	11509198
25.	9–A25	10.261	**DOOR**, I/P COMPT (GRAPHITE) (W/COMPARTMENT & HINGE)	93–96	F	1	17997594
26.	9–A25	10.268	**LATCH**, I/P COMPT DR	93–96	F	1	10278873
27.	9–A25	10.266	**CYLINDER**, I/P COMPT DR LK	93–96	F	1	12502672
28.	9–M6	2.187	**KEY**, DR LK (OVAL HD, GRV H, B&S 320405A, CAN USE 20364745 BOOT)	93–96	F	2	1154607
29.		8.977	**BOLT**, SCR HEX W/FLAT WA 12 DIA TYPE AB (I/P COMPT DR)	93–96		3	11509374
30.	9–N5	9.262	**OUTLET**, I/P CTR AIR (TO I/P CSTR TR PLT BZL)	93–96	F	LH	17997615

cardiagn.com

	9–N5	9.262	OUTLET, I/P CTR AIR (TO I/P CSTR TR PLT BZL)	93–96	F	RH	17997614
31.		8.900	BOLT/SCREW, HWH W/FL WA M4.2X1.41X20, 6010M, 7253M, 12.5 OD, DOG PT (I/P ACSRY TR PLT) (8.977)	93–96		5	11509709
32.	9–A23	10.252	PLATE, I/P ACSRY TR	93–96	F	1	10281174
33.		8.900	BOLT/SCREW, HWH W/FL WA M4 2X1.41X20, 6010M, 7253M, 12.5 OD, DOG PT (I/P CSTR TR PLT) (8.977)	93–96		4	11509709
34.	9–A23	10.252	NUT, I/P ACSRY TR PLT (M4.2X1.41) (PUSH–IN FOR 12MM SQ HOLE)	93–96	F	5	17988488
35.	9–A19	10.235	BOLSTER, I/P DRVR KNEE	93–96	F87 (EXC C49)	1	17990498
	9–A19	10.235	BOLSTER, I/P DRVR KNEE	93–96	F87 (C49)	1	17990499
	9–A19	10.235	BOLSTER, I/P DRVR KNEE	94–96	F67	1	17990499
36.	9–N5	9.262	OUTLET, I/P LWR OTR AIR	93–96	F	1	17997627
37.		8.977	SCREW, HWH TAP 4.2 X 1.41 X 25 (I/P DRVR KNEE BOLS DFL) (10.783)	93–96		1	1640810
		8.929	WASHER, FLAT 5MM PEOR (I/P DRVR KNEE BOLS DFL)	93–96		1	11508426
38.		8.977	SCREW, HWH TAP 4.2 X 1.41 X 25 (I/P DRVR KNEE BOLS) (10.783)	93–96		1	1640810
		8.929	WASHER, FLAT 5MM PEOR (I/P DRVR KNEE BOLS)	93–96		1	11508426
39.		8.977	SCREW, SPL OV HD M/R TAP/DRILL M4.2X1.41X25 NI BLK ORG (I/P DRVR KNEE BOLS)	93–96	F	2	20365258
40.		N.S.	SEALER, STRG COL				
41.	9–N14	9.743	BEZEL, I/P CSTR TR PLT (BLACK)	93–96	F	1	10274341
42.	9–N14	9.743	CLIP, I/P CSTR TR PLT BZL (AC–DELCO #17990493)	93–96	F	1	17990493
43.		8.917	NUT, HEX W/CON WA 6X1X5.5 16–OD ZP 9 (I/P DRVR KNEE BOLS DFL)	93–96		2	11517293
44.	9–A19	10.235	DEFLECTOR, I/P DRVR KNEE BOLS	93–96	F	1	10203254
45.	9–N15	9.780	GRILLE, SI WDO DEFG OTLT	93–96	F	LH	17990492
46.	9–A23	10.252	NUT, I/P ACSRY TR PLT (M4.2X1.41) (PUSH–IN FOR 12MM SQ HOLE)	93–96	F	5	17988488
47.		8.977	SCREW, HEX W/FLAT WA (I/P)	93–96		2	12337828
48.	9–A18	10.230	BRACKET, I/P LWR TIE BAR (CTR LWR)	93–96	F	1	10205552
49.		8.900	BOLT/SCREW, HWH W/FL WA M4.2X1.41X20, 6010M, 7253M, 12.5 OD, DOG PT (I/P LWR TIE BAR BRKT) (8.977)	93–96		1	11509709
50.		8.977	BOLT, SCR HEX W/FLAT WA 12 DIA TYPE AB (I/P LWR TIE BAR)	93–96		4	11509374
51.	9–A18	10.230	INSULATOR, I/P (DOMESTIC APPLICATIONS ONLY)	93–96	F	LH	10265738
	9–A18	10.230	INSULATOR, I/P	93–96	F (EXPORT)	LH	10416851

cardiaopn.com

			738 THK, 13MM HEX, 10, ZF (I/P) (8.915) (AC–DELCO #11514596)				
53.		8.958	TAPE, DUAL LK FSTN (44.5MM X 44.5MM – 5 PER PKG) (I/P FUSE BLK ACC DR) (2.483)	93–96		1	12520053
54.		DISCON	DOOR, I/P FUSE BLK ACC (INCLS 55) (W/FOAM INSL) (2.483)	93	F	1	10238517
	9–M7	2.483	DOOR, I/P FUSE BLK ACC (INCLS 55)	94	F	1	10247835
	9–M7	2.483	DOOR, I/P FUSE BLK ACC (INCLS 55)	95	F	1	10274422
	9–M7	2.483	DOOR, I/P FUSE BLK ACC (INCLS 55)	96	F	1	10281545
55.		DISCON	LABEL, I/P WRG HARN FUSE BLK IDENT (PART OF 54)	93	F	1	10223551
	9–M27	8.808	LABEL, I/P WRG HARN FUSE BLK IDENT (PART OF 54)	94–95	F	1	10247837
		N.S.	LABEL, I/P WRG HARN FUSE BLK IDENT (PART OF 54)	96		1	
56.	9–A24	10.256	COVER, I/P NUT ACC HOLE	93–96	F	2	10191871
57.		8.921	NUT, U–SHAPED, M4.2X1.41, 6010M, ZP, PNL RNG .65–1.25 (I/P)	93–96		5	1638575
58.	9–A25	10.266	TUMBLER, I/P COMPT DR LK CYL ANTI–ROTATION (10.260)	93–96	F	1	12508607
59.	9–A25	10.266	SPRING, I/P COMPT DR LK CYL RTN (ANTI–RATTLE) (ANTI–RATTLE)	93–96	F	1	20496065
60.	9–A25	10.266	SPRING, I/P COMPT DR LK CYL TUMB (SNAP IN) (10.268)	93–96	F	5	6259315
61.	9–A25	10.266	TUMBLER, I/P COMPT DR LK CYL (#1) (SNAP IN) (10.553)	93–96	F	1	6259309
	9–A25	10.266	TUMBLER, I/P COMPT DR LK CYL (#2) (SNAP IN)	93–96	F	1	6259310
	9–A25	10.266	TUMBLER, I/P COMPT DR LK CYL (#3) (SNAP IN)	93–96	F	1	6259311
	9–A25	10.266	TUMBLER, I/P COMPT DR LK CYL (#4) (SNAP IN)	93–96	F	1	6259312
	9–A25	10.266	TUMBLER, I/P COMPT DR LK CYL (#5) (SNAP IN)	93–96	F	1	6259313
62.		8.900	BOLT/SCREW, HWH W/FL WA M4.2X1.41X20, 6010M, 7253M, 12.5 OD, DOG PT (INFL RST CONT MDL BRKT) (8.977)	93–96		4	11509709

RPO DEFINITIONS
AK5 – RESTRAINT SYSTEM,FRONT SEAT,INFLATABLE,DRIVER AND PASSENGER
C49 – DEFOGGER,REAR WINDOW,ELECTRIC

cardiagn.com

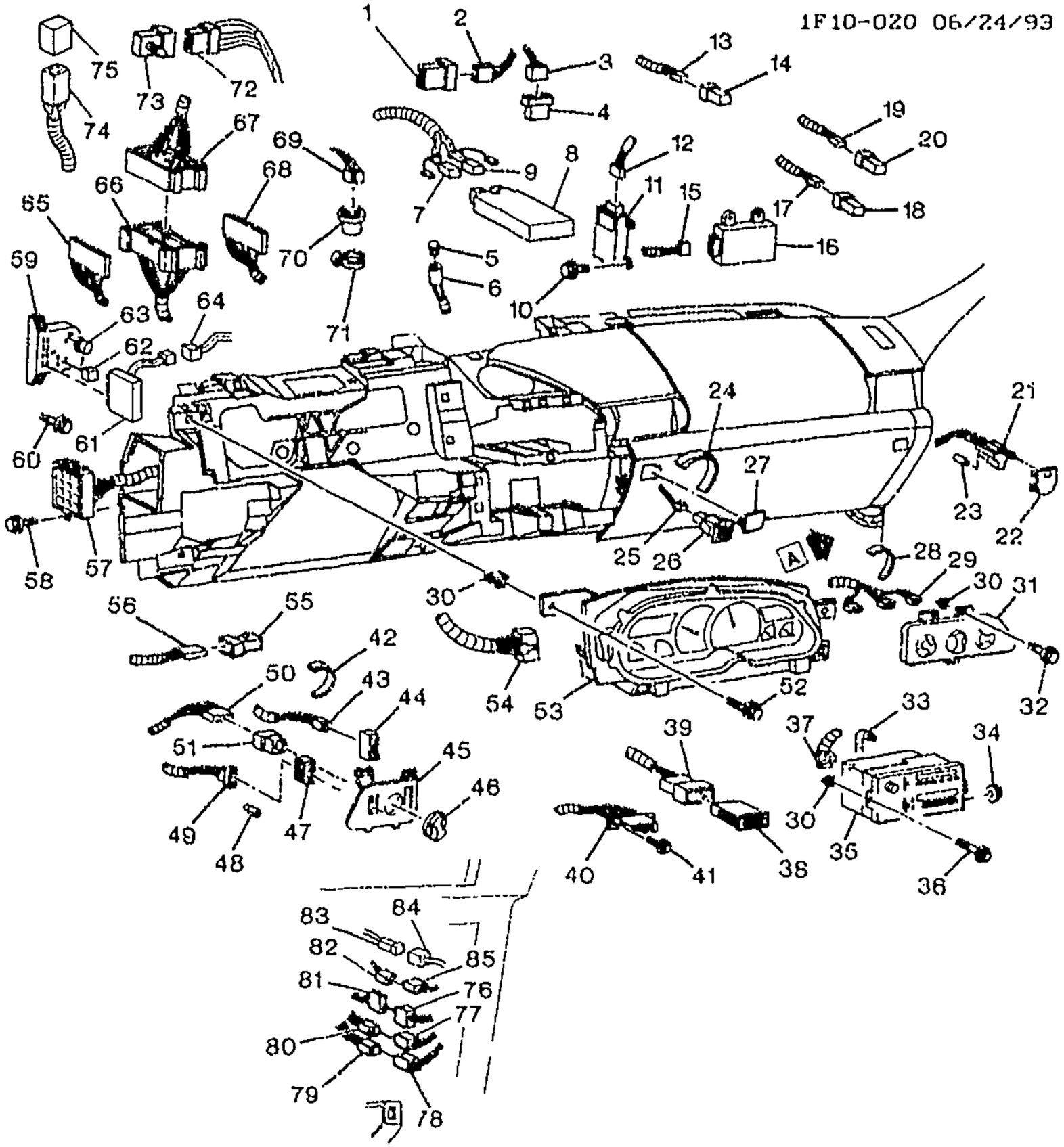

1F10-020

1994-1995 F INSTRUMENT PANEL PART 2

1.	9-B10	10.777	MODULE, P/W CONT (EXPRESS DOWN)	94-95	F	1 12182126
2.	9-B10	10.777	CONNECTOR, MDL-P/W CONT (5-WAY F) (9.778) (AC-DELCO #PT531)	94-95	F	1 12117399
3.	9-A28	10.485	CONNECTOR, MDL-RETAINED ACSRY PWR (BLACK) (7-WAY F) (W/LEADS) (10.163) (AC-DELCO #PT547)	94-95	F	1 12125635
4.	9-A28	10.485	MODULE, RETAINED ACRSY PWR	94-95	F	1 12135089

cardiagn.com

5.	9–M9	2.485	**SENSOR**, DAYTIME RUNNING LP AMB LGT	94–95	F (T61) (EXPORT)	1	10067986
6.	9–M17	2.727	**SOCKET**, DAYTIME RUNNING LP (W/LEADS, USES 09421330/L194 BULB) (2.485) (AC–DELCO #LS71)	94–95	F (T61) (EXPORT)	1	12167138
7.	9–M9	2.485	**CONNECTOR**, MDL–DAYTIME RUNNING LP CONT (BLACK) (8–WAY F W/LEADS, 7–12GA & 4–18GA AS REQ) (2.535) (AC–DELCO #PT1346)	94–95	F (T61) (EXPORT)	1	15306189
8.	9–M9	2.485	**MODULE**, HDLP AUTO CONT (LESS BRKT & BOLTS)	94–95	F (T61) (EXPORT)	1	10098712
9.	9–M9	2.485	**CONNECTOR**, MDL–DAYTIME RUNNING LP CONT (BLUE) (8–WAY F) (W/LEADS) (2.535) (AC–DELCO #PT266)	94–95	F (T61) (EXPORT)	1	12101875
10.		8.977	**BOLT**, SCR HEX W/FLAT WA 12 DIA TYPE AB (THEFT DTRNT MDL)	94–95	.....	2	11509374
11.	9–M6	2.195	**MODULE**, THEFT DTRNT (FOR PASS KEY SYSTEM)	94–95	F	1	16215659
12.		N.S.	**CONNECTOR**, MDL–THEFT DTRNT		.....		
13.	9–N7	9.650	**CONNECTOR**, RDO SPKR AMPF RLY (BLACK) (6–WAY F) (W/O LEADS) (3.900)	94–95	F	1	12110541
14.	9–N7	9.650	**RELAY**, RDO (BLACK) (5–WAY M) (USED W/CONNECTOR 15306045) (W/OUT BRKTS) (9.277) (AC–DELCO #15–8719)	94–95	F87	1	12193601
15.	9–N26	14.865	**CONNECTOR**, MDL–INFL RST DIAGN ENGY RESV (24–WAY F) (W/LEADS) (AC–DELCO #PT1216)	94–95	F	1	12167101
16.	9–N26	14.865	**MODULE**, INFL RST DIAGN ENGY RESV (REMAN)	94–95	F (AK5)	1	16176558
17.	9–N16	12.243	**CONNECTOR**, RLY–R/CMPT LID REL (BLACK) (6–WAY F) (W/O LEADS) (3.900)	94–95	F	1	12110541
18.	9–N16	12.243	**RELAY**, R/CMPT LID REL (BLACK) (5–WAY M) (USED W/CONNECTOR 15306045) (W/OUT BRKTS) (9.277) (AC–DELCO #15–8719)	94–95	F	1	12193601
19.	9–M6	2.195	**CONNECTOR**, RLY–THEFT DTRNT (BLACK) (6–WAY F) (W/O LEADS) (3.900)	94–95	F	1	12110541
20.	9–M6	2.195	**RELAY**, THEFT DTRNT (STARTER ENABLE) (BLACK) (5–WAY M) (USED W/CONNECTOR 15306045) (W/OUT BRKTS) (9 277) (AC–DELCO #15–8719)	94–95	F	1	12193601
21.	9–A26	10.275	**SOCKET**, I/P COMPT LP (W/SW) (AC–DELCO #LS55)	94–95	F	1	12159663
22.	9–A26	10.275	**RETAINER**, I/P COMPT LP	94–95	F	1	12089143
23.		8.991	**TRADE#194**, 12V, 2CP (GLOVE BOX LP) (AC–DELCO #L194) ...	94–95	.....	1	9421330

cardiagn.com

24.	9–M11	2.530	**INSULATOR**, I/P WRG HARN (FOR HATCH REL CONN) (14.865)	94–95	F (EXC A90)	1	14099517
25.	9–N16	12.243	**CONNECTOR**, SW–R/CMPT LID REL (2–WAY F W/LEADS, W/INDEX TAB OTR EDGE OF CAVITY B) (2.535) (AC–DELCO #PT146)	94–95	F	1	12085535
26.	9–N16	12.243	**SWITCH**, R/CMPT LID REL	94–95	F (A90)	1	10060578
27.	9–N16	12.243	**PLUG**, R/C' IPT LID REL SW OPG	94–95	F (EXC A90)	1	10227567
28.	9–M11	2.530	**INSULATC R**, I/P WRG HARN (FOR HVAC ILLUM CONN) (14.865)	94–95	F	1	14099517
29.	9–N4	8.852	**CONNECTOR**, BLO CONT HARN (2–WAY F) (9.215) (AC–DELCO #PT275)	94–95	F	1	12102484
30.	9–N11	9.667	**NUT**, RDO BRKT (M4.2X1.41) (PUSH–IN FOR 12MM SQ HOLE) (10.252)	94–95	F	2	17988488
31.	9–N4	8.949	**CONTROL**, HTR (SEE "HEATER CONTROL SYSTEM" ILLUSTRATION IN GRP 8.000 FOR DETAILED VIEW.) (AC–DELCO #15–72058)	94–95	F (C41)	1	16183801
	9–N5	9.273	**CONTROL**, HTR & A/C (SEE"A/C CONTROL SYSTEM" ILLUSTRATION IN GRP 9.000 FOR DETAILED VIEW.) (AC–DELCO #15–72069)	94–95	F (C60)	1	16183811
32.		8.900	**BOLT/SCREW**, HWH W/FL WA M4.2X1.41X20, 6010M, 7253M, 12.5 OD, DOG PT (HTR & A/C CONT) (8.977)	94–95		3	11509709
33.	9–N7	9.647	**CABLE**, RDO ANT (4670MM) (AC–DELCO #12103391)	94	F	1	12103391
	9–N7	9.647	**CABLE**, RDO ANT (4670MM) (AC–DELCO #12103391)	95	F67	1	12103391
	9–N7	9.647	**CABLE**, RDO ANT (4485MM) (AC–DELCO #12124115)	95	F87	1	12124115
34.		8.917	**NUT**, CONICAL SPR WA HEX (METRIC STYLE 2) M5 X 0.86N 4 (RDO BRKT)	94–95		2	11503647
35.	9–N7	9.650	**RADIO**, AM/FM STEREO & CLK & T/PLYR (AC–DELCO #16176771)	94	F (UU8) (EXC UK1)	1	16176771
	9–N7	9.650	**RADIO**, AM/FM STEREO & CLK & T/PLYR (AC–DELCO #16195201)	94–95	F (UN6) (EXC UK1, UL8)	1	16195201
		DISCON	**RADIO**, AM/FM STEREO & CLK & T/PLYR	94–95	F (UL8, UN6)	1	16198451
	9–N7	9.650	**RADIO**, AM/FM STEREO & CLK & T/PLYR (AC–DELCO #16176771)	95	F (UU8) (EXC UK1, UL8)	1	16176771
	9–N7	9.650	**RADIO**, AM/FM STEREO & CLK & CD PLYR (AC–DELCO #16175961)	94	F (U1T) (EXC UK1)	1	16175961
		DISCON	**RADIO**, AM/FM STEREO & CLK & CD PLYR	94	F67 (U1C) (EXC UK1)	1	16181181

cardiagn.com

	9-N7	9.650	RADIO, AM/FM STEREO & CLK & CD PLYR (AC-DELCO #16175961)	95	F (U1T) (EXC UK1, UL8)	1	16175961
		DISCON	RADIO, AM/FM STEREO & CLK & CD PLYR	95	F67 (U1C) (EXC UK1, UL8)	1	16181181
		N.S.	RADIO, (REMAN) (AVAILABLE THROUGH AC DELCO SERVICE CENTERS)		.....		
	9-N7	9.650	RADIO, AM/FM STEREO & CLK & T/PLYR (AC-DELCO #16176781)	94	F67 (UK1, UN6) (EXC UL8) (EXPORT)	1	16176781
	9-N7	9.650	RADIO, AM/FM STEREO & CLK & T/PLYR (AC-DELCO #16176791)	94-95	F87 (UK1, UU8) (EXPORT)	1	16176791
	9-N7	9.650	RADIO, AM/FM STEREO & CLK & T/PLYR (AC-DELCO #16176781)	95	F67 (UK1, UN6) (EXPORT)	1	16176781
	9-N7	9.650	RADIO, AM/FM STEREO & CLK & CD PLYR (AC-DELCO #16175951)	94	F87 (UK1, U1T) (EXPORT)	1	16175951
36.		8.900	BOLT/SCREW, HWH W/FL WA M4.2X1.41X20. 6010M, 7253M, 12.5 OD, DOG PT (RDO BRKT) (8.977)	94-95	.....	2	11509709
37.	9-N10	9.656	CONNECTOR, RDO (SEE "RADIO ASM & MOUNTING" ILLUSTRATION IN GRP 9.000 FOR DETAILED VIEW.) (BLACK) (10-WAY F) (W/LEADS) (2.535) (AC-DELCO #PT108)	94-95	F	1	12085486
	9-N10	9.656	CONNECTOR, RDO (SEE "RADIO ASM & MOUNTING" ILLUSTRATION IN GRP 9.000 FOR DETAILED VIEW.) (BLACK) (7-WAY F, W/LEADS) (2.535) (AC-DELCO #PT406)	94-95	F	1	12102778
	9-N10	9.656	CONNECTOR, RDO (SEE "RADIO ASM & MOUNTING" ILLUSTRATION IN GRP 9.000 FOR DETAILED VIEW.) (BLUE) (4-WAY F) (W/LEADS) (2.535) ...	94-95	F	1	12102663
	9-N10	9.656	CONNECTOR, RDO (SEE "RADIO ASM & MOUNTING" ILLUSTRATION IN GRP 9.000 FOR DETAILED VIEW.) (BLACK) (9-WAY F, W/LEADS) (9.650) (AC-DELCO #PT316)	95	F	1	12102629
38.	9-N15	9.778	SWITCH, R/WDO DEFG (AC-DELCO #D6321D)	94-95	F (C49)	1	10195564
39.	9-N15	9.778	CONNECTOR, SW-R/WDO DEFG (RED) (5-WAY F, W/O LEADS)	94-95	F	1	12059296
40.	9-M7	2.440	CONNECTOR, DATA LINK (16-WAY F W/O LEADS W/MTG TABS) (AC-DELCO #PT1477) ..	94-95	F	1	12110250

cardiagn.com

							1F10-020
41.		8.977	SCREW, HWH TAP M4.2X1.41X10, 9.2-OD 6010PZOR BLK (I/P WRG HARN DATA LINK CONN)	94-95	.....	2	11509501
42.	9-M11	2.530	INSULATOR, I/P WRG HARN (FOR FOG LP CONN) (14.865) ...	94-95	F (EXC T96)	1	14099517
43.	9-M9	2.485	CONNECTOR, SW-FOG LP (GRAY) (6-WAY F W/LEADS) (4.663)	94-95	F	1	12125665
44.	9-M9	2.485	SWITCH, FOG LP (AC-DELCO #D7018A)	94-95	F (T96)	1	10195574
45.	9-M10	2.487	BEZEL, HDLP SW	94-95	F (T96)	1	10247855
	9-M10	2.487	BEZEL, HDLP SW	94-95	F (EXC T96)	1	10247856
46.	9-M10	2.486	KNOB, HDLP SW	94-95	F	1	10247854
47.	9-M10	2.490	SWITCH, I/P LP DIMR (AC-DELCO #D1579E)	94-95	F (EXC T96)	1	12450124
	9-M10	2.490	SWITCH, I/P LP DIMR (AC-DELCO #D1580E)	94-95	F (T96)	1	12450125
48.		8.991	BULB, HDLP SW IND LP (HDLP SW)	94-95	.....	1	10195525
49.	9-M10	2.490	CONNECTOR, SW-I/P LP DIMR (4-WAY F) (W/LEADS) (AC-DELCO #PT544)	94-95	F	1	12125632
50.		N.S.	CONNECTOR, SW-HDLP		.....		
51.	9-M9	2.485	SWITCH, HDLP (AC-DELCO #D1562D)	94-95	F	1	10195524
52.		8.900	BOLT/SCREW, HWH W/FL WA M4.2X1.41X20, 6010M, 7253M, 12.5 OD, DOG PT (INST CSTR) (8.977)	94-95	.....	4	11509709
53.		DISCON	CLUSTER, INST (NAC)	94-95	F (L32, UB3) (EXC U18, U19)	1	16180191
		DISCON	CLUSTER, INST (NAJ)	94	F (LT1, QMT, UB3) (EXC U18, U19)	1	16180231
	9-N12	9.735	CLUSTER, INST (NAP) (AC-DELCO #16194231)	95	F (L36, UB3) (EXC U18, U19)	1	16194231
		DISCON	CLUSTER, INST (NUMBERS UP TO 150 MPH) (NAJ)	95	F (LT1, UB3) (EXC U18, U19)	1	16180231
		N.S.	CLUSTER, INST (REMAN) (AVAILABLE THROUGH AC DELCO SERVICE CENTERS)		.....		
	9-N12	9.735	CLUSTER, INST (NAD) (AC-DELCO #16180201)	94	F (L32, UB3, U19) (EXC U18) (EXPORT)	1	16180201
	9-N12	9.735	CLUSTER, INST (NAK) (AC-DELCO #16180241)	94	F (LT1, QLC, U19, UB3) (EXC U18) (EXPORT) ..	1	16180241
		DISCON	CLUSTER, INST (NAL)	94	F (L32, U18, UB3) (EXC U19) (EXPORT)	1	16180251
		DISCON	CLUSTER, INST (NAM)	94	F (LT1, U18, UB3) (EXC U19) (EXPORT)	1	16180261
	9-N12	9.735	CLUSTER, INST (NAD) (AC-DELCO #16180201)	95	F (L32, UB3, U19) (EXPORT)	1	16180201
	9-N12	9.735	CLUSTER, INST (NAK) (AC-DELCO #16180241) (LBL NAK & HAS NOS UP TO 240 KPH) (REPLS LBL NAH & NOS UP TO 180 KPH)	95	F (LT1, U19, UB3) (EXPORT)	1	16180241
		DISCON	CLUSTER, INST (NAL)	95	F (L32, U18, UB3) (EXPORT)	1	16180251

cardiagn.com

		DISCON	CLUSTER, INST (NAM)	95	F (LT1, U18, UB3) (EXPORT)	1	16180261
	9–N12	9.735	CLUSTER, INST (NAR) (AC–DELCO #16194241)	95	F (L36, UB3, U19) (EXPORT)	1	16194241
54.	9–N12	9.735	CONNECTOR, CSTR–INST (32–WAY F, W/O TERM LKS) (3.670)	94–95	F	1	12045575
55.	9–M24	3.900	RELAY, F/PMP (BLACK) (5–WAY M) (USED W/CONNECTOR 15306045) (W/OUT BRKTS) (9.277) (AC–DELCO #15–8719)	94–95	F	1	12193601
56.	9–M24	3.900	CONNECTOR, RLY–F/PMP (BLACK) (6–WAY F) (W/O LEADS)	94–95	F	1	12110541
57.		N.S.	BLOCK, FUSE		.....		
58.		8.900	BOLT/SCREW, HWH W/FL WA M4.2X1.41X20, 6010M, 7253M, 12.5 OD, DOG PT (I/P WRG HARN FUSE BLK) (8.977)	94–95	....	1	11509709
59.		N.S.	CONVENIENCE CENTER		.....		
60.		8.977	SCREW, HWH TAP M4.2X1.41X10, 9.2–OD 6010PZOR BLK (I/P WRG HARN CONVENIENCE CTR)	94–95	.....	2	11509501
61.	9–N14	9.765	ALARM, ST BELT & IGN KEY & LPS (2.195)	94–95	F (EXC UD4)	1	14101255
	9–M6	2.195	ALARM, SPD ALERT & ST BELT & IGN KEY & LPS & T/SIG	94–95	F (UD4) (EXPORT)	1	10150318
	9–M18	2.895	ALARM, SPD ALERT & ST BELT & IGN KEY & LPS & T/SIG (2.195)	94–95	F (UD4) (EXPORT)	1	10150318
62.	9–M18	2.815	RELAY, HORN (LITTLE FUSE MANIF) (AC–DELCO #D1776) ..	94–95	F	1	25523703
63.	9–M17	2.575	FLASHER, HAZARD LP (1 1/2" DIA) (6 LP FLSHR) (AC–DELCO #SF552) (1 1/2" DIA, 6 LP FISHER)	94–95	F	1	491391
64.		8.965	CONNECTOR, W/LEADS (ALARM–M/FUNC) (2.535) (AC–DELCO #PT213)	94–95	.....	1	12101821
65.		N.S.	CONNECTOR, INLINE–TO CROSSBODY HARN		... .		
66.	9–M11	2.530	CONNECTOR, INLINE–TO I/P HARN (FWD LP) (18–WAY F)	94–95	F	1	12084183
67.		N.S.	CONNECTOR, 48 WAY		.....		
68.		N.S.	CONNECTOR, INLINE–TO I/P HARN (FWD LP)		.....		
69.	9–M18	2.892	CONNECTOR, FLSHR–T/SIG LP (BLACK) (2–WAY F) (W/LEADS) (2.575) (AC–DELCO #PT663) ...	94–95	F	1	12126032
70.	9–M18	2.892	FLASHER, T/SIG LP (YELLOW) (2 LP FLSHR) (AC–DELCO #SF224)	94–95	F (EXC T90)	1	10041074
	9–M18	2.892	FLASHER, T/SIG LP (AC–DELCO #11515735)	94–95	F (T90) (EXPORT)	1	11515735
71.	9–M18	2.892	CLIP, T/SIG LP FLSHR	94–95	F	1	25534019
72.	9–N4	8.855	CONNECTOR, RLY–BLO MOT (BLACK) (6–WAY F) (W/O LEADS) (3.900)	94–95	F	1	12110541

cardiagn.com

73.	9-N6	9.277	RELAY, BLO MOT (BLACK) (5-WAY M) (USED W/CONNECTOR 15306045) (W/OUT BRKTS) (AC-DELCO #15-8719)	94-95	F	1	12193601
	9-N4	8.855	RELAY, BLO MOT (BLACK) (5-WAY M) (USED W/CONNECTOR 15306045) (W/OUT BRKTS) (9.277) (AC-DELCO #15-8719)	94-95	F	1	12193601
74.		N.S.	CONNECTOR, MDL--ENG COOL LVL IND				
75.	9-M6	1.203	MODULE, ENG COOL LVL IND (W/8 WAY CONN, PLUGS INTO HARN)	94-95	F (LT1)	1	12135027
76.	9-M11	2.530	CONNECTOR, INLINE-TO ENG HARN (4-WAY MALE) (W/LEADS) (AC-DELCO #PT1135)	94-95	F	1	15306008
77.	9-M11	2.530	CONNECTOR, INLINE-TO ENG HARN (NATURAL) (10-WAY M W/LEADS) (2.535) (AC--DELCO #PT215)	94-95	F	1	12101823
78.		N.S.	CONNECTOR, INLINE--TO ENG HARN (BLUE)				
79.	9-M11	2.530	CONNECTOR, INLINE-TO I/P HARN (BLUE) (10-WAY F) (W/LEADS) (AC PT224) (2.535) (AC-DELCO #PT224)	94-95	F	1	12101832
80.	9-M11	2.530	CONNECTOR, INLINE-TO I/P HARN (10-WAY F W/LEADS) (2.535) (AC-DELCO #PT150)	94-95	F	1	12101762
81.	9-M11	2.530	CONNECTOR, INLINE-TO I/P HARN (4 CAV F FLAT) (4-WAY F) (W/LEADS) (2.535) (AC-DELCO #PT109)	94-95	F	1	12095487
82.	9-M11	2.530	CONNECTOR, INLINE-TO I/P HARN (6-WAY F W/LEADS) (13.090) (AC-DELCO #PT1032)	94-95	F	1	15305888
83.		N.S.	CONNECTOR, INLINE-TO I/P HARN				
84.	9-N23	13.100	CONNECTOR, INLINE-TO CROSSBODY HARN (BLACK) (6-WAY M W/LEADS) (AC-DELCO #PT1013)	94-95	F	1	15305872
85.	9-N23	13.100	CONNECTOR, INLINE-TO CROSSBODY HARN (BLACK) (6-WAY M W/LEADS) (AC-DELCO #PT1013)	94-95	F	1	15305872

RPO DEFINITIONS

AK5 - RESTRAINT SYSTEM,FRONT SEAT,INFLATABLE,DRIVER AND PASSENGER
A90 - LOCK,REAR COMPARTMENT LID,REMOTE CONTROL,ELECTRIC RELEASE
C41 - HEATER,OUTSIDE AIR,WITH FAN AND DEFROSTER
C49 - DEFOGGER,REAR WINDOW,ELECTRIC
C60 - AIR CONDITIONER,FRONT,MANUAL CONTROLS
LT1 - ENGINE-GAS, 8 CYL, 5.7L(5.7P),MFI,HO
L32 - ENGINE,3.4L,V6,(3.4S),SFI,OHV
L36 - ENGINE GAS, 6 CYL, 3.8K, MFI, V6, HO (ERV6 SERIES)

cardiagn.com

QM7 – TIRE ALL P235/55R16/N BL R/PE ST TL AL2
T61 – LIGHTING,DAYTIME RUNNING
T90 – LAMP,SIGNALING AND MARKER(EXPORT)
T96 – LAMP,FRONT FOG
UB3 – CLUSTER,INSTRUMENT(OIL,COOLANT TEMPERATURE,VOLTMETER,TACHOMETER,TRIP ODOMETER)
UD4 – ALARM,VEHICLE SPEED(120 KPH)
UK1 – RADIO FREQUENCY(JAPANESE)
UL8 – FREQUENCIES–SAUDI ARABIAN RADIO(EXPORT)
UN6 – RADIO,AM/FM STEREO,CASSETTE,ETR,INCLUDES CLOCK
UU8 – RADIO,AM/FM STEREO,CASSETTE,ETR,DELCO/BOSE,DOLBY,INCLUDES CLOCK
U1C – RADIO,AM/FM STEREO,C.D PLAYER,ETR,INCLUDES CLOCK
U1T – RADIO AM/FM STEREO, SEEK/SCAN, COMPACT DISC, HPS, CLOCK, ETR
U18 – SPEEDOMETER,INSTRUMENT,KILOMETER(EXPORT)
U19 – SPEEDOMETER,INSTRUMENT(EXPORT)

cardiagn.com

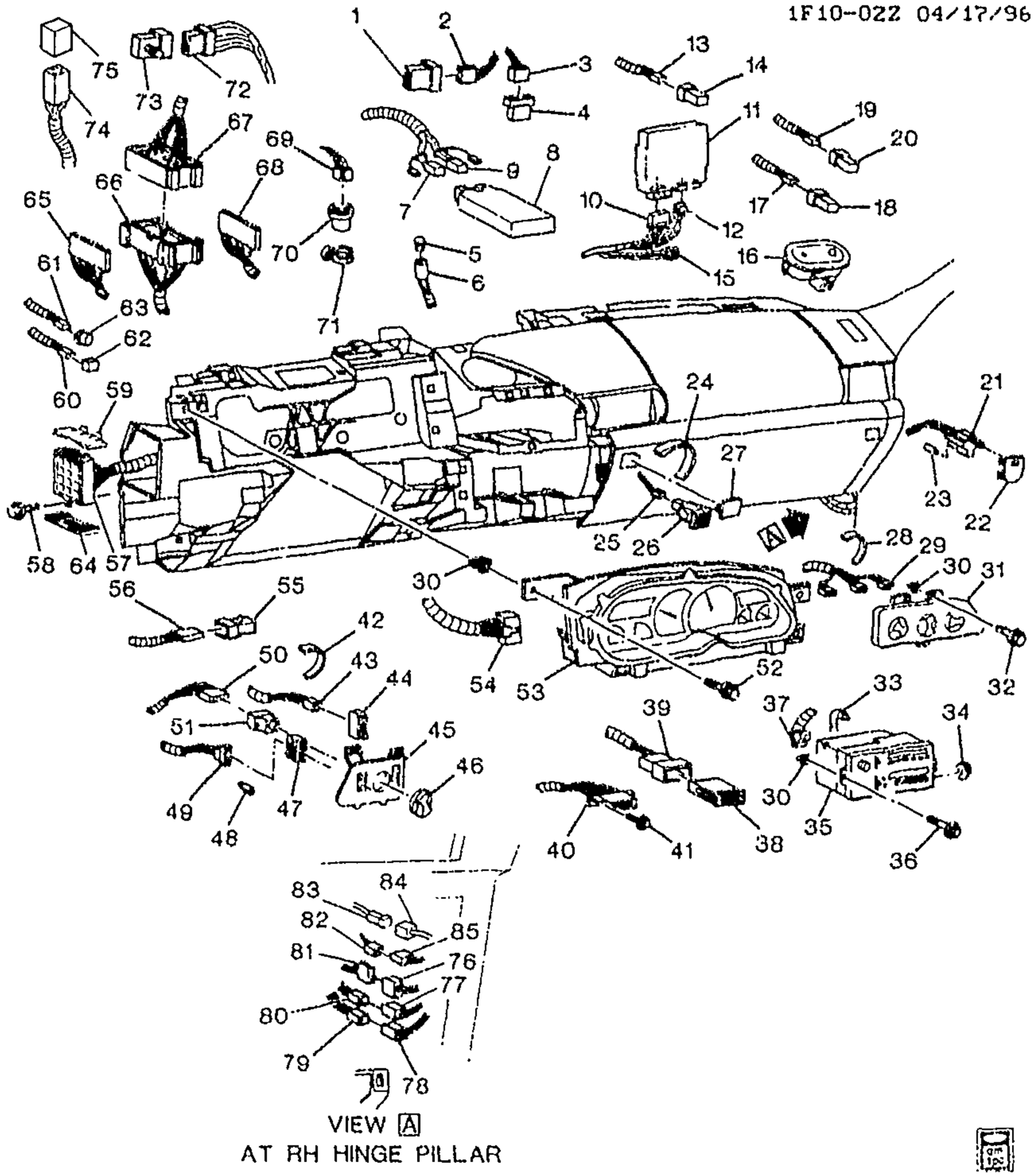

1996 F INSTRUMENT PANEL PART 2

1.	9-B10	10.777	MODULE, P/W CONT (EXPRESS DOWN)	96 F	1	12182126
2.	9-B10	10.777	CONNECTOR, MDL-P/W CONT (5-WAY F) (9.778) (AC-DELCO #PT531)	96 F	1	12117399
3.	9-M17	2.596	CONNECTOR, RLY-PARK LP (BLACK) (6-WAY F) (W/O LEADS) (3.900)	96 F	1	12110541

cardiagn.com

							1F10–022
4.	9–M17	2.596	RELAY, PARK LP (BLACK) (5–WAY M) (USED W/CONNECTOR 15306045) (W/OUT BRKTS) (9.277) (AC–DELCO #15–8719)	96	F	1	12193601
5.	9–M9	2.485	SENSOR, DAYTIME RUNNING LP AMB LGT	96	F (T61) (EXPORT)	1	10067986
6.	9–M17	2.727	SOCKET, DAYTIME RUNNING LP (W/LEADS, USES 09421330/L194 BULB) (2 485) (AC–DELCO #LS71)	96	F (T61) (EXPORT)	1	12167138
7.	9–M9	2.485	CONNECTOR, MDL–DAYTIME RUNNING LP CONT (BLACK) (8–WAY F W/LEADS, 7–12GA & 4–18GA AS REQ) (2.535) (AC–DELCO #PT1346)	96	F (T61) (EXPORT)	1	15306189
8.	9–M9	2.485	MODULE, HDLP AUTO CONT (LESS BRKT & BOLTS)	96	F (T61) (EXPORT)	1	10098712
9.	9–M9	2.485	CONNECTOR, MDL–DAYTIME RUNNING LP CONT (BLUE) (8–WAY F) (W/LEADS) (2.535) (AC–DELCO #PT266)	96	F (T61) (EXPORT)	1	12101875
10.	9–M19	3.670	CONNECTOR, MDL–ENG CONT (80–WAY F) (USE TERM 12084912 18 GA & TERM 12084913 20 GA)	96	F (L36)	2	12167308
	9–M19	3.670	CONNECTOR, MDL–ENG CONT (32–WAY F) (TYPICALLY USES 12084912 TERM)	96	F (LT1)	4	12129025
11.	9–A28	10.485	MODULE, BODY CONT (2.560) ..	96	F (AU0)	1	16243951
	9–A28	10.485	MODULE, BODY CONT (2.560) ..	96	F (EXC AU0)	1	16243961
12.	9–M17	2.560	CONNECTOR, MDL–BODY CONT (6–WAY F W/LEADS) (13.090) (AC–DELCO #PT1032) .	96	F	1	15305888
13.	9–N7	9.650	CONNECTOR, RDO SPKR AMPF RLY (BLACK) (6–WAY F) (W/O LEADS) (3.900)	96	F	1	12110541
14.	9–N7	9.650	RELAY, RDO (BLACK) (5–WAY M) (USED W/CONNECTOR 15306045) (W/OUT BRKTS) (9.277) (AC–DELCO #15–8719)	96	F87	1	12193601
15.	9–N5	9.215	CONNECTOR, MOT–BLO (2–WAY F) (AC–DELCO #PT275)	96	F	1	12102484
16.	9–N14	9.765	RETAINER, SECURITY IND LP ..	96	F (UA6) (EXC T61)	1	10269963
	9–N14	9.765	LAMP, SECURITY IND	96	F (UA6)	1	10257168
	9–N14	9.765	RETAINER, SECURITY IND LP ..	96	F (T61, UA6) (EXPORT)	1	10269964
17.	9–N16	12.243	CONNECTOR, RLY–R/CMPT LID REL (BLACK) (6–WAY F) (W/O LEADS) (3.900)	96	F	1	12110541
18.	9–N16	12.243	RELAY, R/CMPT LID REL (BLACK) (5–WAY M) (USED W/CONNECTOR 15306045) (W/OUT BRKTS) (9.277) (AC–DELCO #15–8719)	96	F	1	12193601
19.	9–M6	2.100	CONNECTOR, RLY–START MOT THEFT DTRNT (BLACK) (6–WAY F) (W/O LEADS) (3.900)	96	F	1	12110541

cardiagn.com

						1F10-022
20.	9-M6	2.195	**RELAY**, THEFT DTRNT (STARTER ENABLE) (BLACK) (5-WAY M) (USED W/CONNECTOR 15306045) (W/OUT BRKTS) (9.277) (AC-DELCO #15-8719)	96	F	1 12193601
21.	9-A26	10.275	**SOCKET**, I/P COMPT LP (W/SW) (AC-DELCO #LS55)	96	F	1 12159663
22.	9-A26	10.275	**RETAINER**, I/P COMPT LP	96	F	1 12089143
23.		8.991	**TRADE#194**, 12V, 2CP (GLOVE BOX LP) (AC-DELCO #L194)	96		1 9421330
24.	9-M11	2.530	**INSULATOR**, I/P WRG HARN (FOR HATCH REL CONN) (14.865)	96	F (EXC A90)	1 14099517
25.	9-N16	12.243	**CONNECTOR**, SW-R/CMPT LID REL (2-WAY F W/LEADS, W/INDEX TAB OTR EDGE OF CAVITY B) (2.535) (AC-DELCO #PT146)	96	F	1 12085535
26.	9-N16	12.243	**SWITCH**, R/CMPT LID REL	96	F (A90)	1 10060578
27.	9-N16	12.243	**PLUG**, R/CMPT LID REL SW OPG	96	F (EXC A90)	1 10227567
28.	9-M11	2.530	**INSULATOR**, I/P WRG HARN (FOR HVAC ILLUM CONN) (14.865)	96	F	1 14099517
29.	9-N4	8.852	**CONNECTOR**, BLO CONT HARN (2-WAY F) (9.215) (AC-DELCO #PT275)	96	F	1 12102484
30.	9-N11	9.667	**NUT**, RDO BRKT (M4.2X1.41) (PUSH-IN FOR 12MM SQ HOLE) (10.252)	96	F	2 17988488
31.	9-N4	8.849	**CONTROL**, HTR (SEE "HEATER CONTROL SYSTEM" ILLUSTRATION IN GRP 8.000 FOR DETAILED VIEW) (AC-DELCO #15-72058)	96	F (C41)	1 16183801
	9-N5	9.273	**CONTROL**, HTR & A/C (SEE "A/C CONTROL SYSTEM" ILLUSTRATION IN GRP 9.000 FOR DETAILED VIEW.) (AC-DELCO #15-72069)	96	F (C60)	1 16183811
32.		8.900	**BOLT/SCREW**, HWH W/FL WA M4.2X1.41X20, 6010M, 7253M, 12.5 OD, DOG PT (HTR & A/C CONT) (8.977)	96		3 11509709
33.	9-N7	9.647	**CABLE**, RDO ANT (4485MM) (AC-DELCO #12124115)	96	F87	1 12124115
	9-N7	9.647	**CABLE**, RDO ANT (AC-DELCO #12162904)	96	F67	1 12162904
34.		8.917	**NUT**, CONICAL SPR WA HEX (METRIC STYLE 2) M5 X 0.86N 4 (RDO BRKT)	96		2 11503647
35.	9-N7	9.650	**RADIO**, AM/FM STEREO & CLK & T/PLYR (AC-DELCO #16176771)	96	F (UU8) (EXC UK1, UL8)	1 16176771
	9-N7	9.650	**RADIO**, AM/FM STEREO & CLK & T/PLYR (STAMPED BKRM, CLRM) (AC-DELCO #9356045)	96	F (UM6)	1 9356045

cardiagn.com

	9–N7	9.650	RADIO, AM/FM STEREO & CLK & T/PLYR (BXYH CRMA) (AC–DELCO #15766826)	96	F (UM6)	1	15766826
	9–N7	9.650	RADIO, AM/FM STEREO & CLK & T/PLYR (AC–DELCO #16195201)	96	F (UN6) (EXC UK1, UL8)	1	16195201
	9–N7	9.650	RADIO, AM/FM STEREO & CLK & T/PLYR (AC–DELCO #16199081)	96	F (UL8, UN6)	1	16199081
	9–N7	9.650	RADIO, AM/FM STEREO & CLK & T/PLYR (AC–DELCO #16195221)	96	F67 (UK1, UN6)	1	16195221
		N.S.	RADIO, (REMAN) (AVAILABLE THROUGH AC DELCO SERVICE CENTERS)		.....		
36.		8.900	BOLT/SCREW, HWH W/FL WA M4.2X1.41X20, 6010M, 7253M, 12.5 OD, DOG PT (RDO BRKT) (8.977)	96	.....	1	11509709
37.	9–N10	9.656	CONNECTOR, RDO (SEE " RADIO ASM & MOUNTING" ILLUSTRATION IN GRP 9.000 FOR DETAILED VIEW.) (BLACK) (10–WAY F) (W/LEADS) (2.535) (AC–DELCO #PT109)	96	F	1	12085486
	9–N10	9.656	CONNECTOR, RDO (SEE " RADIO ASM & MOUNTING" ILLUSTRATION IN GRP 9.000 FOR DETAILED VIEW.) (BLACK) (7–WAY F, W/LEADS) (2.535) (AC–DELCO #PT406)	96	F	1	12102778
	9–N10	9.656	CONNECTOR, RDO (SEE " RADIO ASM & MOUNTING" ILLUSTRATION IN GRP 9.000 FOR DETAILED VIEW.) (BLUE) (4–WAY F) (W/LEADS) (2.535) ...	96	F	1	12102663
	9–N10	9.656	CONNECTOR, RDO (SEE " RADIO ASM & MOUNTING" ILLUSTRATION IN GRP 9.000 FOR DETAILED VIEW.) (BLACK) (9–WAY F, W/LEADS) (9.650) (AC–DELCO #PT316)	96	F	1	12102629
38.	9–N15	9.778	SWITCH, R/WDO DEFG (AC–DELCO #D6321D)	96	F (C49)	1	10195564
39.	9–N15	9.778	CONNECTOR, SW–R/WDO DEFG (RED) (5–WAY F, W/O LEADS)	96	F	1	12059296
40.	9–M7	2.440	CONNECTOR, DATA LINK (16–WAY F W/O LEADS W/MTG TABS) (AC–DELCO #PT1477) ..	96	F	1	12110250
41.		8.977	SCREW, HWH TAP M4.2X1.41X10, 9.2–OD 6010PZOR BLK (I/P WRG HARN DATA LINK CONN)	96	.....	1	11509501
42.	9–M11	2.530	INSULATOR, I/P WRG HARN (FOR FOG LP CONN) (14.865) ...	96	F (EXC T96)	1	14099517

cardiagn.com

43.	9–M9	2.485	CONNECTOR, SW–FOG LP (GRAY) (6–WAY F W/LEADS) (4.663)	96	F	1	12125665
44.	9–M9	2.485	SWITCH, FOG LP (AC–DELCO #D7018A)	96	F (T96)	1	10195574
45.	9–M10	2.487	BEZEL, HDLP SW	96	F (T96)	1	10247855
	9–M10	2.487	BEZEL, HDLP SW	96	F (EXC T96)	1	10247856
46.	9–M10	2.486	KNOB, HDLP SW	96	F	1	10247854
47.	9–M10	2.490	SWITCH, I/P LP DIMR (AC–DELCO #D1579E)	96	F (EXC T96)	1	12450124
	9–M10	2.490	SWITCH, I/P LP DIMR (AC–DELCO #D1580E)	96	F (T96)	1	12450125
48.		8.991	BULB, HDLP SW IND LP (HDLP SW)	96		1	10195525
49.	9–M10	2.490	CONNECTOR, SW–I/P LP DIMR (4–WAY F) (W/LEADS) (AC–DELCO #PT544)	96	F	1	12125632
50.		N.S.	CONNECTOR, SW–HDLP				
51.	9–M9	2.485	SWITCH, HDLP (AC–DELCO #D1562D)	96	F	1	10195524
52.		8.900	BOLT/SCREW, HWH W/FL WA M4.2X1.41X20, 6010M, 7253M, 12.5 OD, DOG PT (INST CSTR) (8.977)	96		2	11509709
53.		DISCON	CLUSTER, INST (NAJ)	96	F (LT1, UB3) (EXC U18, U19)	1	16180231
	9–N12	9.735	CLUSTER, INST (NAK) (AC–DELCO #16180241)	96	F (LT1, U19, UB3)	1	16180241
	9–N12	9.735	CLUSTER, INST (NBL) (AC–DELCO #16211161)	96	F (L36, UB3) (EXC U18, U19)	1	16211161
	9–N12	9.735	CLUSTER, INST (NBM) (AC–DELCO #16211171)	96	F (L36, UB3, U19)	1	16211171
	9–N12	9.735	CLUSTER, INST (NBT) (AC–DELCO #16213091)	96	F (L36, UB3, U18)	1	16213091
		DISCON	CLUSTER, INST (NAM)	96	F (LT1, U18, UB3) (EXPORT)	1	16180261
54.	9–N12	9.735	CONNECTOR, CSTR–INST (32–WAY F, W/O TERM LKS) (3.670)	96	F	1	12045575
55.	9–M24	3.900	RELAY, F/PMP (BLACK) (5–WAY M) (USED W/CONNECTOR 15306045) (W/OUT BRKTS) (9.277) (AC–DELCO #15–8719)	96	F	1	12193601
56.	9–M24	3.900	CONNECTOR, RLY–F/PMP (TWO 12GA AND THREE 14GA WIRES) (8.855) (AC–DELCO #PT1205)	96	F	1	15306045
57.	9–M7	2.483	BLOCK, FUSE (I/P WRG)	96	F	1	12146075
58.		8.900	BOLT/SCREW, HWH W/FL WA M4.2X1.41X20, 6010M, 7253M, 12.5 OD, DOG PT (I/P WRG HARN FUSE BLK) (8.977)	96		1	11509709
59.	9–M7	2.483	BRACKET, FUSE BLK RET (UPPER)	96	F	1	12129299
60.	9–M18	2.815	CONNECTOR, RLY–HORN (BLACK) (6–WAY F) (W/O LEADS) (3.900)	96	F	1	12110541

cardiagn.com

61.	9–M18	2.892	**CONNECTOR**, FLSHR–T/SIG LP (BLACK) (2–WAY F) (W/LEADS) (2.575) (AC–DELCO #PT663) ...	96	F	1	12126032
62.	9–M18	2.815	**RELAY**, HORN (BLACK) (5–WAY M) (USED W/CONNECTOR 15306045) (W/OUT BRKTS) (9.277) (AC–DELCO #15–8719)	96	F	1	12193601
63.	9–M17	2.575	**FLASHER**, HAZARD LP (1 1/2" DIA) (6 LP FLSHR) (AC–DELCO #SF552) (1 1/2" DIA, 6 LP FISHER)	96	F	1	491391
64.	9–M7	2.483	**BRACKET**, FUSE BLK RET (LOWER)	96	F	1	12129298
65.		N.S.	**CONNECTOR**, INLINE–TO CROSSBODY HARN		.....		
66.		N.S.	**CONNECTOR**, INLINE–TO I/P HARN (FWD LP)		.....		
67.		N.S.	**CONNECTOR**, 48 WAY		.....		
68.		N.S.	**CONNECTOR**, INLINE–TO I/P HARN (FWD LP)		.....		
69.	9–M18	2.892	**CONNECTOR**, FLSHR–T/SIG LP (BLACK) (2–WAY F) (W/LEADS) (2.575) (AC–DELCO #PT663) ...	96	F	1	12126032
70.	9–M18	2.892	**FLASHER**, T/SIG LP (YELLOW) (2 LP FLSHR) (AC–DELCO #SF224)	96	F (EXC T90)	1	10041074
	9–M18	2.892	**FLASHER**, T/SIG LP (AC–DELCO #11515735)	96	F (T90) (EXPORT)	1	11515735
71.	9–M18	2.892	**CLIP**, T/SIG LP FLSHR	96	F	1	25534019
72.	9–N4	8.855	**CONNECTOR**, RLY–BLO MOT (BLACK) (6–WAY F) (W/O LEADS) (3.900)	96	.....	1	12110541
73.	9–N6	9.277	**RELAY**, BLO MOT (BLACK) (5–WAY M) (USED W/CONNECTOR 15306045) (W/OUT BRKTS) (AC–DELCO #15–8719)	96	F	1	12193601
	9–N4	8.855	**RELAY**, BLO MOT (BLACK) (5–WAY M) (USED W/CONNECTOR 15306045) (W/OUT BRKTS) (9.277) (AC–DELCO #15–8719)	96	F	1	12193601
74.		N.S.	**CONNECTOR**, MDL–ENG COOL LVL IND		.....		
75.	9–M6	1.203	**MODULE**, ENG COOL LVL IND (W/2–WAY CONN, TO RAD) (INCLS SEN PROBE) (AC–DELCO #10096163)	96	F (LT1)	1	10096163
76.	9–M11	2.530	**CONNECTOR**, INLINE–TO ENG HARN (4–WAY MALE) (W/LEADS) (AC–DELCO #PT1135)	96	F	1	15306008
77.	9–M11	2.530	**CONNECTOR**, INLINE–TO ENG HARN (NATURAL) (10–WAY M W/LEADS) (2.535) (AC–DELCO #PT215)	96	F	1	12101823
78.		N.S.	**CONNECTOR**, INLINE–TO ENG HARN (BLUE)		.....		

cardiagn.com

79.	9-M11	2.530	CONNECTOR, INLINE-TO I/P HARN (BLUE) (10-WAY F) (W/LEADS) (AC PT224) (2.535) (AC-DELCO #PT224)	96	F	1	12101832
80.	9-M11	2.530	CONNECTOR, INLINE-TO I/P HARN (10-WAY F W/LEADS) (2.535) (AC-DELCO #PT150) ...	96	F	1	12101762
81.	9-M11	2.530	CONNECTOR, INLINE-TO I/P HARN (4 CAV F FLAT) (4-WAY F) (W/LEADS) (2.535) (AC-DELCO #PT109)	96	F	1	12085487
82.	9-M11	2.530	CONNECTOR, INLINE-TO I/P HARN (6-WAY F W/LEADS) (13.090) (AC-DELCO #PT1032) .	96	F	1	15305888
83.		N.S.	CONNECTOR, INLINE-TO I/P HARN		.....		
84.	9-N23	13.100	CONNECTOR, INLINE-TO CROSSBODY HARN (BLACK) (6-WAY M W/LEADS) (AC-DELCO #PT1013)	96	F	1	15305872
85.	9-N23	13.100	CONNECTOR, INLINE-TO CROSSBODY HARN (BLACK) (6-WAY M W/LEADS) (AC-DELCO #PT1013)	96	F	1	15305872

RPO DEFINITIONS

AU0 – LOCK CONTROL,REMOTE ENTRY(KEYLESS ENTRY SYSTEM)
A90 – LOCK,REAR COMPARTMENT LID,REMOTE CONTROL,ELECTRIC RELEASE
C41 – HEATER,OUTSIDE AIR,WITH FAN AND DEFROSTER
C49 – DEFOGGER,REAR WINDOW,ELECTRIC
C60 – AIR CONDITIONER,FRONT,MANUAL CONTRO' S
LT1 – ENGINE-GAS, 8 CYL, 5.7L(5.7P),MFI,HO
L36 – ENGINE GAS, 6 CYL, 3.8K, MFI, V6, HO (ERV6 SERIES)
T61 – LIGHTING,DAYTIME RUNNING
T90 – LAMP,SIGNALING AND MARKER(EXPORT)
T96 – LAMP,FRONT FOG
UA6 – THEFT DETERRENT SYSTEM
UB3 – CLUSTER,INSTRUMENT(OIL,COOLANT TEMPERATURE,VOLTMETER,TACHOMETER,TRIP ODOMETER)
UK1 – RADIO FREQUENCY(JAPANESE)
UL8 – FREQUENCIES-SAUDI ARABIAN RADIO(EXPORT)
UM6 – RADIO,AM/FM STEREO,CASSETTE,ETR,INCLUDES CLOCK
UN6 – RADIO,AM/FM STEREO,CASSETTE,ETR,INCLUDES CLOCK
UU8 – RADIO,AM/FM STEREO,CASSETTE,ETR,DELCO/BOSE,DOLBY,INCLUDES CLOCK
U18 – SPEEDOMETER,INSTRUMENT,KILOMETER(EXPORT)
U19 – SPEEDOMETER,INSTRUMENT(EXPORT)

cardiagn.com

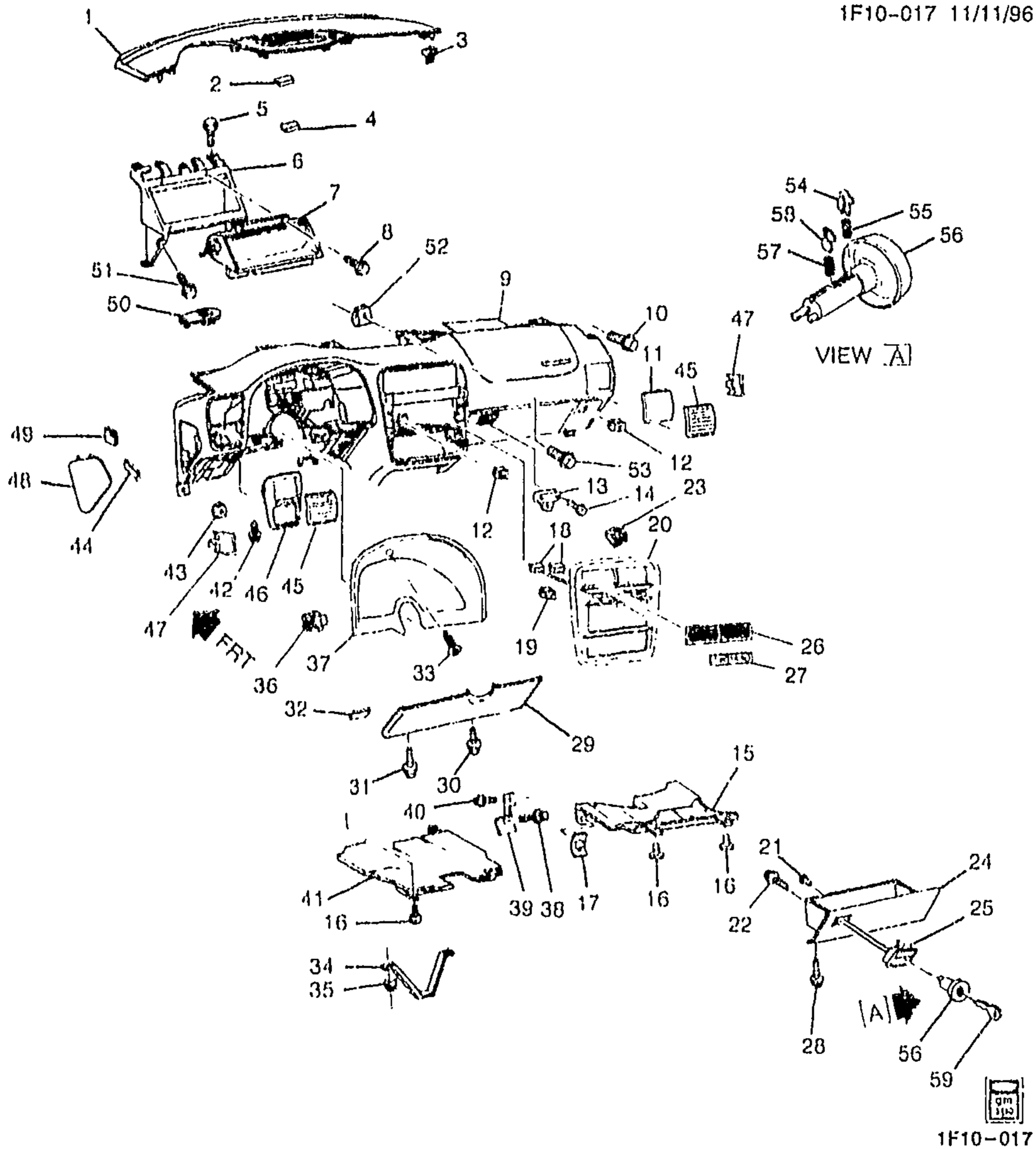

1997-2002 F INSTRUMENT PANEL PART 1

NOTE: FOR INFORMATION ON AIR DUCTS SEE A/C AIR DISTRIBUTION SYSTEM ILLUSTRATION IN GROUP 9.000.

1.	9-A18	10.230	PANEL, I/P UPR TR	97-99	F	1	10422746
	9-A18	10.230	PANEL, I/P UPR TR	00-02	F	1	10410583
2.		8.958	TAPE, DUAL LK FSTN (44.5MM X 44.5MM - 5 PER PKG) (I/P)	97-02		1	12520053

cardiagn.com

4.		8.958	TAPE, DUAL LK FSTN (44.5MM X 44.5MM – 5 PER PKG) (I/P UPR T/PNL FSTN) (2.483)	97–02		5	12520053
5.		8.977	SCREW, 6.3X1.81X20 (INFL RST CONT MDL BRKT)	97–02		2	11509051
6.	9–N26	14.865	BRACKET, I/P INFL RST MDL	97–02	F (AK5)	1	10267167
7.	9–N26	14.865	MODULE, I/P INFL RST	97	F (AK5)	1	16759321
	9–N26	14.865	MODULE, I/P INFL RST	98	F (AK5)	1	16822710
	9–N26	14.865	MODULE, I/P INFL RST	99–02	F (AK5) (EXC VD1)	1	16867082
	9–N26	14.865	MODULE, I/P INFL RST	98	F (AK5, VD1) (EXPORT)	1	16823477
	9–N26	14.865	MODULE, I/P INFL RST	99–02	F (AK5, VD1) (EXPORT)	1	16824021
8.		8.900	BOLT/SCREW, HWH W/FL WA M4.2X1.41X20, 6010M, 7253M, 12.5 OD, DOG PT (INFL RST I/P MDL) (8.977)	97–02		4	11509709
9.	9–A18	10.230	PANEL, INST (W/PASS SI INFL RST CVR)	97–99	F	1	10269100
	9–A18	10.230	PANEL, INST (W/ PASS SI INFL RST CVR)	00–02	F	1	10410485
10.		8.977	SCREW, HWH TAP 4.2 X 1.41 X 25 (I/P) (10.783)	97–02		1	1640810
		8.929	WASHER, FLAT 5MM PEOR (I/P)	97–02		1	11508426
11.	9–A23	10.252	PLATE, I/P ACSRY TR	97–02	F	LH	10271262
	9–A23	10.252	PLATE, I/P ACSRY TR (CTR) (RDO))	97	F	1	10271309
	9–A23	10.252	PLATE, I/P ACSRY TR	97–02	F	1	10271341
	9–A23	10.252	PLATE, I/P ACSRY TR (CTR) (RDO))	98–02	F (EXC VD1)	1	10271309
	9–A23	10.252	PLATE, I/P ACSRY TR	02	F	1	10429632
	9–A23	10.252	PLATE, I/P ACSRY TR	98–99	F (VD1) (EXPORT)	1	10411608
	9–A23	10.252	PLATE, I/P ACSRY TR	00–02	F (VD1) (EXPORT)	1	10429632
12.		8.917	NUT, HEX FLG M8–1.25 9.8 PC (I/P)	97–02		AR	11502609
13.	9–A25	10.268	STRIKER, I/P COMPT DR LAT	97–02	F	1	17997572
14.		8.900	BOLT, HWH, M4.2X1.41X18, 12.5 OD, 6010M, PS (I/P COMPT DR LAT STKR) (8.977)	97–02		2	15714276
15.	9–A18	10.230	INSULATOR, I/P (TRIM OFF TAB LOC TO RT OF GLOVE BOX HGE, WHEN INSTL FOR 93–94)	97–02	F	RH	10270975
16.	9–A18	10.230	RETAINER, I/P INSL (CHRISTMAS TREE TYPE) (15.100)	97–02	F	3	10193261
17.	9–A18	10.230	RETAINER, I/P INSL (PUSH–ON)	97–02	F	1	10220726
18.	9–A24	10.256	COVER, I/P ACSRY TR PLT SW HOLE	97–02	F	2	10273932
19.	9–A23	10.252	CLIP, I/P ACSRY TR PLT (PART OF 20) (11.075)	97–02	F	4	10050362
20.	9–A23	10.252	PLATE, I/P ACSRY TR (INCLS 19) (CTR) (RDO))	97–02	F	1	10271309
21.	9–A25	10.263	BUMPER, I/P COMPT DR	97–02	F	2	10276643
22.		8.900	BOLT, HWH THD ROLLER 4X0.7X10 9.2–OD FULL THD 6171M ZP (I/P)	97–02		2	11509198
23.	9–A23	10.252	CLIP, I/P ACSRY TR PLT (U–TYPE) (6.760)	97–02	F	2	10148727

cardiagn.com

							1F10–017
24.	9–A25	10.261	DOOR, I/P COMPT (BLACK) (W/COMPARTMENT & HINGE) ...	97–99	F	1	17997632
	9–A25	10.261	DOOR, I/P COMPT (EBONY) (W/COMPARTMENT & HINGE) ...	00–02	F	1	10429398
25.	9–A25	10.268	LATCH, I/P COMPT DR	97–02	F	1	10278873
26.	9–N5	9.262	OUTLET, I/P CTR AIR	97–02	F	2	10271310
27.	9–A24	10.256	COVER, I/P ACSRY TR PLT SW HOLE ("CAMARO")	97–02	F	1	10287314
28.		8.977	BOLT, SCR HEX W/FLAT WA 12 DIA TYPE AB (I/P COMPT DR) ...	97–02	.....	3	11509374
29.	9–A19	10.235	BOLSTER, I/P DRVR KNEE	97–99	F (A90)	1	10410144
	9–A19	10.235	BOLSTER, I/P DRVR KNEE	97–99	F (EXC A90)	1	10410145
	9–A19	10.235	BOLSTER, I/P DRVR KNEE	00–02	F67	1	10410488
	9–A19	10.235	BOLSTER, I/P DRVR KNEE	00–02	F87 (A90)	1	10410488
	9–A19	10.235	BOLSTER, I/P DRVR KNEE	00–02	F87 (EXC A90)	1	10410489
30.		8.977	SCREW, HWH TAP 4.2 X 1.41 X 25 (I/P DRVR KNEE BOLS DFL) (10.783)	97–02	.....	1	1640810
		8.929	WASHER, FLAT 5MM PEOR (I/P DRVR KNEE BOLS DFL)	97–02	.....	1	11508426
31.		8.977	SCREW, HWH TAP 4.2 X 1.41 X 25 (I/P DRVR KNEE BOLS) (10.783)	97–02	.....	1	1640810
		8.929	WASHER, FLAT 5MM PEOR (I/P DRVR KNEE BOLS DFL)	97–02	.....	1	11508426
32.		8.958	TAPE, DUAL LK FSTN (44.5MM X 44.5MM – 5 PER PKG) (I/P DRVR KNEE BOLS) (2.483)	97–02	.....	4	12520053
33.		8.900	BOLT/SCREW, HWH W/FL WA M4.2X1.41X20, 6010M, 7253M, 12.5 OD. DOG PT (I/P ACSRY TR PLT) (8.977)	97–02	F	2	11509709
34.	9–A19	10.235	DEFLECTOR, I/P DRVR KNEE BOLS	97–02	F	1	10203254
35.		8.917	NUT, HEX W/CON WA 6X1X5.5 16–OD ZP 9 (I/P DRVR KNEE BOLS DFL)	97–02	.....	2	11517293
36.	9–N14	9.743	CLIP, I/P CSTR TR PLT (PART OF 37) (11.075)	97–02	F	2	10050362
37.	9–A23	10.252	PLATE, I/P ACSRY TR (INCLS 36) (CSTR)	97–99	F	1	10269104
	9–A23	10.252	PLATE, I/P ACSRY TR (INCLS 36) (CSTR)	00–02	F	1	10410608
	9–A23	10.252	PLATE, I/P ACSRY TR (INCLS 36)	02	F (EXC VD1)	1	10300957
	9–N14	9.743	INSULATOR, I/P CSTR TR PLT (RUBBER)	97–02	F	2	25603681
	9–A23	10.252	PLATE, I/P ACSRY TR (INCLS 36)	02	F (VD1) (EXPORT)	1	10300959
38.		8.977	SCREW, HEX W/FLAT WA (I/P) ..	97–02	.....	2	12337828
39.	9–A18	10.230	BRACKET, I/P LWR TIE BAR (CTR LWR)	97–02	F	1	10269101
40.		8.900	BOLT/SCREW, HWH W/FL WA M4.2X1.41X20, 6010M, 7253M, 12.5 OD, DOG PT (I/P LWR TIE BAR BRKT) (8.977)	97–02	.. ..	1	11509709

cardiagn.com

42.		8.977	BOLT, SCR HEX W/FLAT WA 12 DIA TYPE AB (I/P LWR TIE BAR)	97–02		4	11509374
43.		8.917	NUT, HFH, M8X1.25, 17.9 OD, 738 THK, 13MM HEX, 10, ZF (I/P) (8.915) (AC–DELCO #11514596)	97–02		2	11514596
44.		8.958	TAPE, DUAL LK FSTN (44.5MM X 44.5MM – 5 PER PKG) (I/P FUSE BLK ACC DR) (2.483)	97–02		1	12520053
	9–M7	2.483	DOOR, I/P FUSE BLK ACC (I/P FUSE BLK ACC DR)	97	F	1	10286170
	9–M7	2.483	DOOR, I/P FUSE BLK ACC (I/P FUSE BLK ACC DR)	98–99	F	1	10298916
	9–M7	2.483	DOOR, I/P FUSE BLK ACC (I/P FUSE BLK ACC DR)	00–02	F	1	10439860
45.	9–N5	9.262	OUTLET, I/P OTR AIR (LH/RH)	97–02	F	2	10271263
46.	9–A23	10.252	PLATE, I/P ACSRY TR	97–02	F	LH	10271262
47.	9–A23	10.252	CLIP, I/P ACSRY TR PLT (U–TYPE) (6.760)	97–02	F	8	10148727
48.	9–M7	2.483	DOOR, I/P FUSE BLK ACC (INCLS 49)	97	F	1	10286170
	9–M7	2.483	DOOR, I/P FUSE BLK ACC (INCLS 49)	98–99	F	1	10298916
	9–M7	2.483	DOOR, I/P FUSE BLK ACC (INCLS 49)	00–02	F	1	10439860
49.		N.S.	LABEL, I/P WRG HARN FUSE BLK IDENT (PART OF 48)				
50.	9–A24	10.256	COVER, I/P NUT ACC HOLE	97–02	F	2	10191871
51.		8.900	BOLT/SCREW, HWH W/FL WA M4.2X1.41X20, 6010M, 7253M, 12.5 OD, DOG PT (INFL RST CONT MDL BRKT) (8.977)	97–02		4	11509709
52.		8.921	NUT, U–SHAPED, M4.2X1.41, 6010M, ZP, PNL RNG .65–1.25 (I/P)	97–02		5	1638575
53.		8.900	BOLT/SCREW, HWH W/FL WA M4.2X1.41X20, 6010M, 7253M, 12.5 OD, DOG PT (I/P) (8.977)	97–02		4	11509709
54.	9–A25	10.266	TUMBLER, I/P COMPT DR LK CYL ANTI–ROTATION (10.260)	97–02	F	1	12508607
55.	9–A25	10.266	SPRING, I/P COMPT DR LK CYL TUMB (SNAP IN) (10.268)	97–02	F	5	6259315
56.	9–A25	10.266	CYLINDER, I/P COMPT DR LK	97–02	F	1	12502672
57.	9–A25	10.266	SPRING, I/P COMPT DR LK CYL TUMB (SNAP IN) (10.268)	97–02	F	5	6259315
58.	9–A25	10.266	TUMBLER, I/P COMPT DR LK CYL (#1) (SNAP IN) (10.553)	97–02	F	1	6259309
	9–A25	10.266	TUMBLER, I/P COMPT DR LK CYL (#2) (SNAP IN)	97–02	F	1	6259310
	9–A25	10.266	TUMBLER, I/P COMPT DR LK CYL (#3) (SNAP IN)	97–02	F	1	6259311
	9–A25	10.266	TUMBLER, I/P COMPT DR LK CYL (#4) (SNAP IN)	97–02	F	1	6259312
	9–A25	10.266	TUMBLER, I/P COMPT DR LK CYL (#5) (SNAP IN)	97–02	F	1	6259313
59.	9–M6	2.187	KEY, DR LK (OVAL HD, GRV H,	97–02	F	2	1154607

cardiagn.com

AK5 -- RESTRAINT SYSTEM,FRONT SEAT,INFLATABLE,DRIVER AND PASSENGER
A90 -- LOCK,REAR COMPARTMENT LID,REMOTE CONTROL,ELECTRIC RELEASE
VD1 -- PROVISION OPTIONS,EUROPE(EXPORT)

cardiagn.com

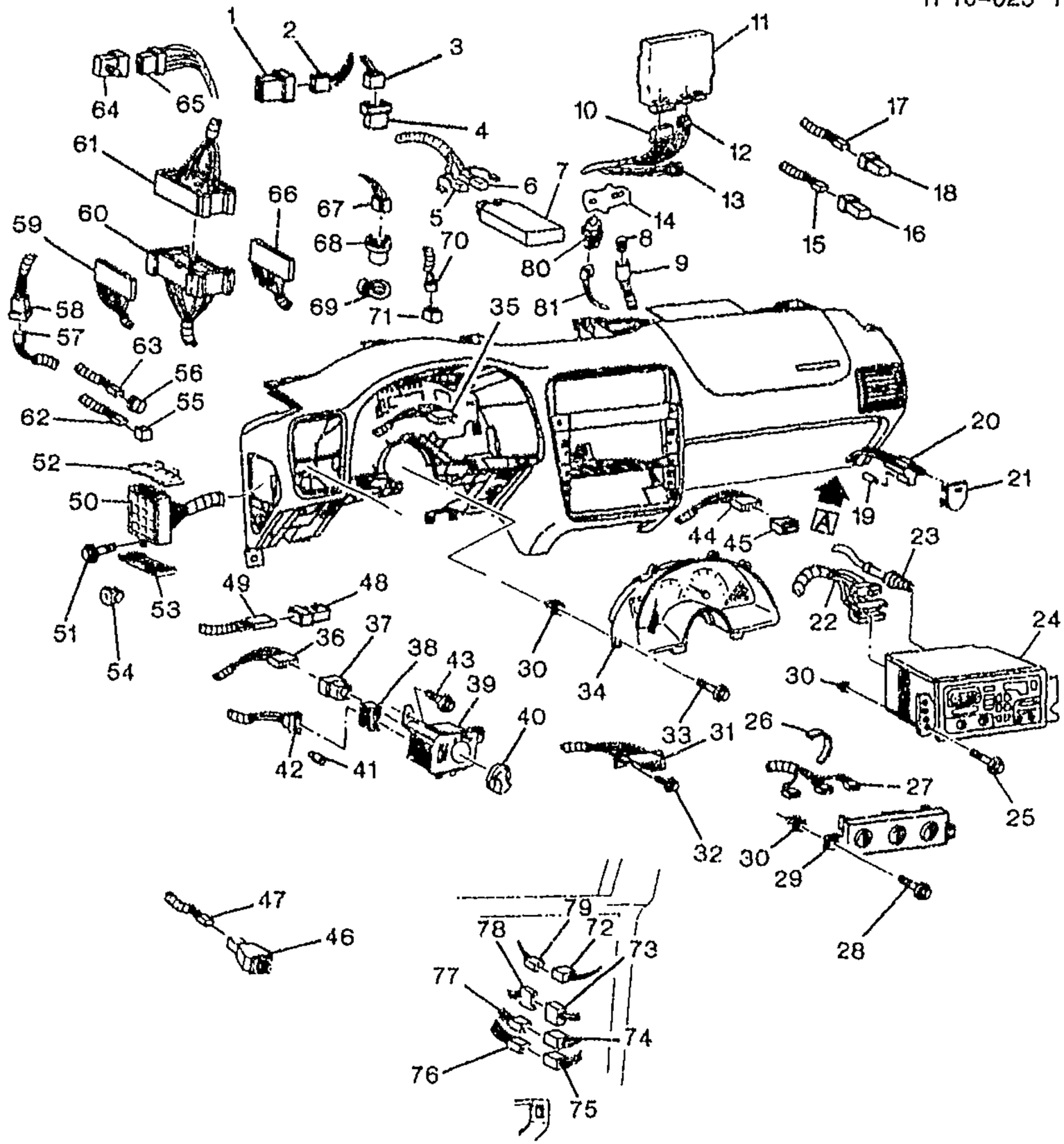

VIEW A
AT RH HINGE PILLAR

1F10-023

1997-2002 F INSTRUMENT PANEL PART 2

1.	9-B10	10.777	MODULE, P/W CONT (EXPRESS DOWN)	97-02 F	1	12182126
2.	9-B10	10.777	CONNECTOR, MDL-P/W CONT (5-WAY F) (9.778) (AC-DELCO #PT531)	97-02 F	1	12117399
3.	9-M17	2.596	CONNECTOR, RLY-PARK LP (BLACK) (6-WAY F) (W/O LEADS) (3.900)	97-02 F	1	12110541
4.	9-M17	2.596	RELAY, PARK LP (BLACK) (5-WAY M) (USED	97-99 F	1	12193601

cardiagn.com

5.	9-M9	2.485	CONNECTOR, MDL-DAYTIME RUNNING LP CONT (BLUE) (8-WAY F) (W/LEADS) (2.535) (AC-DELCO #PT266)	97-02	F	1	12101875
	9-M9	2.485	CONNECTOR, MDL-DAYTIME RUNNING LP CONT (BLACK) (8-WAY F W/LEADS, 7-12GA & 4-18GA AS REQ) (2.535) (AC-DELCO #PT1346)	97-02	F	1	15306189
6.	9-M9	2.485	CONNECTOR, MDL-DAYTIME RUNNING LP CONT (BLUE) (8-WAY F) (W/LEADS) (2.535) (AC-DELCO #PT266)	97-02	F	1	12101875
7.	9-M9	2.485	MODULE, HDLP AUTO CONT ...	97-02	F (EXC T62)	1	10407669
8.	9-M9	2.485	SENSOR, DAYTIME RUNNING LP AMB LGT	97-02	F (T82)	1	10261143
9.	9-M9	2.485	CONNECTOR, SEN-DAYTIME RUNNING LP AMB LGT (2-WAY F W/LEADS, W/INDEX TAB OTR EDGE OF CAVITY B) (2.535) (AC-DELCO #PT146)	97-02	F	1	12085535
10.	9-M19	3.670	CONNECTOR, MDL-ENG CONT (80-WAY F) (USE TERM 12084912 18 GA & TERM 12084913 20 GA)	97-02	F (L36)	2	12167308
	9-M19	3.670	CONNECTOR, MDL-ENG CONT (32-WAY F) (TYPICALLY USES 12084912 TERM)	97	F (LT1)	4	12129025
	9-M19	3.670	CONNECTOR, MDL-ENG CONT (80-WAY F) (USE TERM 12084912 18 GA & TERM 12084913 20 GA)	98-02	F (LS1)	2	12167308
11.	9-M17	2.560	MODULE, BODY CONT	97-02	F (EXC AU0)	1	9353681
	9-A28	10.485	MODULE, BODY CONT (2.560) ..	97-02	F (EXC AU0)	1	9353681
	9-M17	2.560	MODULE, BODY CONT	97	F (AU0)	AR	9353691
	9-A28	10.485	MODULE, BODY CONT (2.560) ..	97	F (AU0)	AR	9353691
	9-M17	2.560	MODULE, BODY CONT	98-02	F (AU0, UA6)	1	9353691
	9-A28	10.485	MODULE, BODY CONT (2.560) ..	98-02	F (AU0, UA6)	1	9353691
12.	9-M17	2.560	CONNECTOR, MDL-BODY CONT (6-WAY F W/LEADS) (13.090) (AC-DELCO #PT1032) .	97-02	F	1	15305888
	9-M17	2.560	CONNECTOR, MDL-BODY CONT (GREEN) (6-WAY F) (16.263)	97-02	F	1	12089527
	9-M17	2.560	CONNECTOR, MDL-BODY CONT (BLUE) (32-WAY F W/O LEADSS) (3.670)	97-02	F	1	12110207
13.	9-N5	9.215	CONNECTOR, MOT-BLO (2-WAY F) (AC-DELCO #PT275)	97-02	F	1	12102484
14.	9-N14	9.765	RETAINER, DAYTIME RUNNING LP IND & SECURITY IND (AC-DELCO #10273744)	97-02	F	1	10273744
15.	9-N16	12.243	CONNECTOR, RLY-R/CMPT LID REL (BLACK) (6-WAY F) (W/O LEADS) (3.900)	97-02	F	1	12110541

cardiagn.com

							1P10-023
16.	9-N16	12.243	RELAY, R/CMPT LID REL (BLACK) (5-WAY M) (USED W/CONNECTOR 15306045) (W/OUT BRKTS) (9.277) (AC-DELCO #15-8719)	97	F	1	12193601
	9-N16	12.243	RELAY, R/CMPT LID REL (5-TERMINAL) (9.277) (AC-DELCO #15-8721)	98-02	F	1	12177233
17.	9-M6	2.100	CONNECTOR, RLY-START MOT THEFT DTRNT (BLACK) (6-WAY F) (W/O LEADS) (3.900)	97-02	F	1	12110541
18.	9-M6	2.195	RELAY, THEFT DTRNT (STARTER ENABLE) (BLACK) (5-WAY M) (USED W/CONNECTOR 15306045) (W/OUT BRKTS) (9.277) (AC-DELCO #15-8719)	97-02	F (UA6)	1	12193601
19.		8.991	TRADE#194, 12V, 2CP (GLOVE BOX LP) (AC-DELCO #L194) ...	97-02	.....	1	9421330
20.	9-A26	10.275	SOCKET, I/P COMPT LP (W/SW) (AC-DELCO #LS55)	97-98	F	1	12159663
	9-A26	10.275	SOCKET, I/P COMPT LP (AC-DELCO #LS91)	99-02	F	1	15306092
21.	9-A26	10.275	RETAINER, I/P COMPT LP	97-02	F	1	12089143
22.	9-N10	9.656	CONNECTOR RDO (SEE "RADIO ASM & MOUNTING" ILLUSTRATION FOR DETAILED VIEW.) (BLACK) (10-WAY F) (W/LEADS) (2.535) (AC-DELCO #PT108)	97-02	F	1	12085486
	9-N10	9.656	CONNECTOR, RDO (SEE "RADIO ASM & MOUNTING" ILLUSTRATION FOR DETAILED VIEW.) (BLACK) (7-WAY F, W/LEADS) (2.535) (AC-DELCO #PT406)	97	F	1	12102778
	9-N10	9.656	CONNECTOR, RDO (SEE "RADIO ASM & MOUNTING" ILLUSTRATION FOR DETAILED VIEW.) (BLUE) (4-WAY F) (W/LEADS) (2.535)	97	F	1	12102663
	9-N10	9.656	CONNECTOR, RDO (SEE "RADIO ASM & MOUNTING" ILLUSTRATION FOR DETAILED VIEW.) (BLACK) (9-WAY F, W/LEADS) (9.650) (AC-DELCO #PT316)	97-02	F	1	12102629
	9-N10	9.656	CONNECTOR, RDO (SEE "RADIO ASM & MOUNTING" ILLUSTRATION FOR DETAILED VIEW.) (WHITE) (10-WAY F) (W/LEADS) (AC-DELCO #PT582)	98-02	F	1	12125670
23.	9-N7	9.647	CABLE, RDO ANT (AC-DELCO #12162904)	97	F67 (EXC ETA)	1	12162904
	9-N7	9.647	CABLE, RDO ANT (AC-DELCO #12186450)	97-98	F67 (ETA)	1	12186450
	9-N7	9.647	CABLE, RDO ANT (AC-DELCO #12186133)	97	F87 (W52, W53, W54, W55, W56)	1	12186133

cardiagn.com

	9–N7	9.647	CABLE, RDO ANT (AC–DELCO #12186133)	98–02	F87	1	12186133
	9–N7	9.647	CABLE, RDO ANT (AC–DELCO #12186450)	99–02	F67	1	12186450
24.	9–N7	9.650	RADIO, AM/FM STEREO & CLK & T/PLYR (STAMPED BKRM, CLRM) (AC–DELCO #9356045)	97–99	F (UM6)	1	9356045
	9–N7	9.650	RADIO, AM/FM STEREO & CLK & T/PLYR (AC–DELCO #16232091)	97	F (UL0) (EXC UK1, UL8)	1	16232091
	9–N7	9.650	RADIO, AM/FM STEREO & CLK & T/PLYR (AC–DELCO #16232091)	98	F (UL0, U62) (EXC UK1, UL8)	1	16232091
	9–N7	9.650	RADIO, AM/FM STEREO & CLK & T/PLYR (AC–DELCO #16255311)	98	F (UL0, UZ7) (EXC UK1, UL8)	1	16255311
	9–N7	9.650	RADIO, AM/FM STEREO & CLK & T/PLYR (BXYH CRMA) (AC–DELCO #15766826)	97–99	F (UM6)	1	15766826
	9–N7	9.650	RADIO. AM/FM STEREO & CLK & T/PLYR (AC–DELCO #16255311)	99	F (UL0, UZ7, U59) (EXC UK1, UL8)	1	16255311
	9–N7	9.650	RADIO, AM/FM STEREO & CLK & T/PLYR (AC–DELCO #9356201)	00–02	F (UL2, UW3)	1	9356201
	9–N7	9.650	RADIO, AM/FM STEREO & CLK & T/PLYR (AC–DELCO #9383791)	00–02	F (UL0, UL8)	1	9383791
	9–N7	9.650	RADIO, AM/FM STEREO & CLK & T/PLYR (AC–DELCO #10306066)	00–02	F (UL0, UZ7, U59) (EXC UK1, UL8)	1	10306066
	9–N7	9.650	RADIO, AM/FM STEREO & CLK & T/PLYR (AC–DELCO #16255365)	00	F87 (UM6)	1	16255365
	9–N7	9.650	RADIO, AM/FM STEREO & CLK & T/PLYR (AC–DELCO #10312736)	01–02	FP67 (UM6)	1	10312736
	9–N7	9.650	RADIO, AM/FM STEREO & CLK & CD PLYR (AC–DELCO #10306067)	98	F (UN0, UZ7) (EXC UK1, UL8)	1	10306067
	9–N7	9.650	RADIO, AM/FM STEREO & CLK & CD PLYR (AC–DELCO #10306067)	99	F (UN0, UZ7, U59) (EXC UK1, UL8)	1	10306067
	9–N7	9.650	RADIO, AM/FM STEREO & CLK & CD PLYR	01–02	F87 (UN0, UQ0) (EXC UK1, UL8)	1	10300770
	9–N7	9.650	RADIO, AM/FM STEREO & CLK & CD PLYR (MONSOON CD) (AC–DELCO #10306067)	00–02	F (UN0, UZ7, U59) (EXC UK1, UL8)	1	10306067
		N.S.	RADIO, (REMAN) (AVAILABLE THROUGH AC DELCO SERVICE CENTERS)				
	9–N7	9.650	RADIO, AM/FM STEREO & CLK & T/PLYR (AC–DELCO #9383791)	97–99	F (UL0, UL8) (EXPORT)	1	9383791
	9–N7	9.650	RADIO, AM/FM STEREO & CLK & T/PLYR (AC–DELCO #16213831)	97	FP67 (UK1, UL0, U62) (EXPORT)	1	16213831

cardiagn.com

	9–N7	9.650	RADIO, AM/FM STEREO & CLK & T/PLYR (AC–DELCO #16213831)	97	FP87 (UK1, UL0, UZ7) (EXPORT)	1	16213831
	9–N7	9.650	RADIO, AM/FM STEREO & CLK & T/PLYR (AC–DELCO #9356201)	98–99	F (UL2, UW3) (EXPORT)	1	9356201
	9–N7	9.650	RADIO, AM/FM STEREO & CLK & T/PLYR (AC–DELCO #16232111)	98–99	F (UK1, UL0) (EXPORT)	1	16232111
	9–N7	9.650	RADIO, AM/FM STEREO & CLK & T/PLYR (AC–DELCO #10306069)	00–02	F (UK1, UL0) (EXPORT)	1	10306069
25.		8.900	BOLT/SCREW, HWH W/FL WA M4.2X1.41X20, 6010M, 7253M, 12.5 OD, DOG PT (RDO BRKT) (8.977)	97–02	.....	3	11509709
26.	9–M11	2.530	INSULATOR, I/P WRG HARN (FOR HVAC ILLUM CONN) (14.865)	97–02	F	1	14099517
27.	9–N4	8.852	CONNECTOR, BLO CONT HARN (SEE "HEATER MODULE ASM C41" ILLUSTRATION IN GRP 8.000 OR "A/C & HEATER MODULE ASM C60" ILLUSTRATION IN GRP 9.000 FOR DETAILED VIEW.) (2–WAY F) (9.215) (AC–DELCO #PT275) .	97–02	F	1	12102484
28.		8.900	BOLT/SCREW, HWH W/FL WA M4.2X1.41X20, 6010M, 7253M, 12.5 OD, DOG PT (HTR & A/C CONT) (8.977)	97–02	....	2	11509709
29.	9–N5	9.273	CONTROL, HTR & A/C (SEE "A/C & HEATER MODULE ASM" ILLUSTRATION IN GRP 9.000 FOR DETAILED VIEW.) (AC–DELCO #15–72291)	97	F67 (C60)	1	16216451
	9–N5	9.273	CONTROL, HTR & A/C (SEE "A/C & HEATER MODULE ASM" ILLUSTRATION IN GRP 9.000 FOR DETAILED VIEW.) (AC–DELCO #15–72291)	97	F87 (C49, C60)	1	16216451
	9–N5	9.273	CONTROL, HTR & A/C (SEE "A/C & HEATER MODULE ASM" ILLUSTRATION IN GRP 9.000 FOR DETAILED VIEW.) (AC–DELCO #15–72292)	97	F87 (C60) (EXC C49) ..	1	16216461
	9–N5	9.273	CONTROL, HTR & A/C (SEE "A/C & HEATER MODULE ASM" ILLUSTRATION IN GRP 9.000 FOR DETAILED VIEW.) (AC–DELCO #15–72291)	98–99	F67 (C60) (EXC VD1) ..	1	16216451
	9–N5	9.273	CONTROL, HTR & A/C (SEE "A/C & HEATER MODULE ASM" ILLUSTRATION IN GRP 9.000 FOR DETAILED VIEW.) (AC–DELCO #15–72291)	98–99	F87 (C49, C60) (EXC VD1)	1	16216451

cardiagn.com

	9-N5	9.273	CONTROL, HTR & A/C (SEE "A/C & HEATER MODULE ASM" ILLUSTRATION IN GRP 9.000 FOR DETAILED VIEW.) (AC-DELCO #15-72292)	98-99	F87 (C60) (EXC C49, VD1)	1	16216461
	9-N5	9.273	CONTROL, HTR & A/C (SEE "A/C & HEATER MODULE ASM" ILLUSTRATION IN GRP 9.000 FOR DETAILED VIEW.) (AC-DELCO #15-72562)	00-02	F67 (C60) (EXC VD1) ..	1	9351461
	9-N5	9.273	CONTROL, HTR & A/C (SEE "A/C & HEATER MODULE ASM" ILLUSTRATION IN GRP 9.000 FOR DETAILED VIEW.) (AC-DELCO #15-72562)	00-02	F87 (C49, C60) (EXC VD1)	1	9351461
	9-N5	9.273	CONTROL, HTR & A/C (SEE "A/C & HEATER MODULE ASM" ILLUSTRATION IN GRP 9.000 FOR DETAILED VIEW.) (AC-DELCO #15-72563)	00-02	F87 (C60) (EXC C49, VD1)	1	9351471
	9-N5	9.273	CONTROL, HTR & A/C (SEE "A/C & HEATER MODULE ASM" ILLUSTRATION IN GRP 9.000 FOR DETAILED VIEW.) (AC-DELCO #15-72564)	02	F67 (C60, VD1)	1	9351481
	9-N5	9.273	CONTROL, HTR & A/C (SEE "A/C & HEATER MODULE ASM" ILLUSTRATION IN GRP 9.000 FOR DETAILED VIEW.) (AC-DELCO #15-72564)	02	F87 (C49, C60, VD1) ...	1	9351481
	9-N5	9.273	CONTROL, HTR & A/C (SEE "A/C & HEATER MODULE ASM" ILLUSTRATION IN GRP 9.000 FOR DETAILED VIEW.) (AC-DELCO #15-72460)	98-99	F67 (C60, VD1) (EXPORT)	1	16216491
	9-N5	9.273	CONTROL, HTR & A/C (SEE "A/C & HEATER MODULE ASM" ILLUSTRATION IN GRP 9.000 FOR DETAILED VIEW.) (AC-DELCO #15-72460)	98-99	F87 (C49, C60, VD1) (EXPORT)	1	16216491
	9-N5	9.273	CONTROL, HTR & A/C (SEE "A/C & HEATER MODULE ASM" ILLUSTRATION IN GRP 9.000 FOR DETAILED VIEW.) (AC-DELCO #15-72564)	00-02	F67 (C60, VD1) (EXPORT)	1	9351481
	9-N5	9.273	CONTROL, HTR & A/C (SEE "A/C & HEATER MODULE ASM" ILLUSTRATION IN GRP 9.000 FOR DETAILED VIEW.) (AC-DELCO #15-72564)	00-02	F87 (C49, C60, VD1) (EXPORT)	1	9351481
30.	9-A18	10.230	NUT, I/P (M8X1.25) (8.915) (AC-DELCO #11514596)	97-98	F	2	11514596
	9-A18	10.230	NUT, I/P (M4.2X1.41) (PUSH-IN FOR 12MM SQ HOLE) (10.252) ..	99-02	F	21	17988488
31.	9-M7	2.440	CONNECTOR, DATA LINK (16-WAY F W/O LEADS W/MTG TABS) (AC-DELCO #PT1477) ..	97-02	F	1	12110250

cardiagn.com

32.		8.977	SCREW, HWH TAP M4.2X1.41X10, 9.2-OD 6010PZOR BLK (I/P WRG HARN DATA LINK CONN)	97-02		2	11509501
33.		8.900	BOLT/SCREW, HWH W/FL WA M4.2X1.41X20, 6010M, 7253M, 12.5 OD, DOG PT (INST CSTR) (8.977)	97-02		4	11509709
34.		DISCON	CLUSTER, INST (NBN)	97	F (L36, UB3) (EXC U12, U19)	1	16215751
		DISCON	CLUSTER, INST (NBP, 150 MPH)	97	F (LT1, UB3) (EXC U12, U19)	1	16215771
	9-N12	9.735	CLUSTER, INST (NBS) (AC-DELCO #16215781)	97	F (L36, UB3, U19)	1	16215781
	9-N12	9.735	CLUSTER, INST (NBW, 150 MPH) (AC-DELCO #16215801)	97	F (LT1, UB3, U19)	1	16215801
	9-N12	9.735	CLUSTER, INST (NBY) (AC-DELCO #16215811)	97	F (L36, UB3, U12)	1	16215811
		DISCON	CLUSTER, INST (NBZ)	97	F (LT1, UB3, U12)	1	16215821
	9-N12	9.735	CLUSTER, INST (AC-DELCO #16232031)	98	F (L36, UB3) (EXC UC2, U12, U19)	1	16232031
	9-N12	9.735	CLUSTER, INST (AC-DELCO #16232051)	98	F (LS1, UB3) (EXC UC2, U12, U19)	1	16232051
	9-N12	9.735	CLUSTER, INST (AC-DELCO #16232071)	98	F (L36, UB3, U12)	1	16232071
	9-N12	9.735	CLUSTER, INST (AC-DELCO #16232081)	98	F (LS1, UB3, U12)	1	16232081
	9-N12	9.735	CLUSTER, INST (AC-DELCO #9380651)	99-02	F (L36, UB3) (EXC UC2, U12, U19)	1	9380651
	9-N12	9.735	CLUSTER, INST (AC-DELCO #9380711)	99-02	F (LS1, UB3) (EXC UC2, U12, U19)	1	9380711
	9-N12	9.735	CLUSTER, INST (AC-DELCO #9380691)	02	F (L36, UB3, UC2)	1	9380691
		N.S.	CLUSTER, INST (REMAN) (AVAILABLE THROUGH AC DELCO SERVICE CENTERS)				
	9-N12	9.735	CLUSTER, INST (AC-DELCO #16232041)	98	F (L36, UB3, U19) (EXPORT)	1	16232041
	9-N12	9.735	CLUSTER, INST (AC-DELCO #16232061)	98	F (LS1, UB3, U19) (EXPORT)	1	16232061
	9-N12	9.735	CLUSTER, INST (AC-DELCO #16233021)	98	F (L36, UB3, UC2) (EXPORT)	1	16233021
	9-N12	9.735	CLUSTER, INST (AC-DELCO #16233031)	98	F (LS1, UB3, UC2) (EXPORT)	1	16233031
	9-N12	9.735	CLUSTER, INST (AC-DELCO #9380691)	99-02	F (L36, UB3, U12, UC2) (EXPORT)	1	9380691
	9-N12	9.735	CLUSTER, INST (AC-DELCO #9380731)	99-02	F (LS1, UB3, UC2) (EXPORT)	1	9380731
	9-N12	9.735	CLUSTER, INST (AC-DELCO #16232951)	99	F (L36, UB3, U12, U19) (EXPORT)	1	16232951
	9-N12	9.735	CLUSTER, INST (AC-DELCO #16232971)	99	F (LS1, UB3, U12, U19) (EXPORT)	1	16232971
	9-N12	9.735	CLUSTER, INST (AC-DELCO #9380671)	00-02	F (L36, UB3, U12, U19) (EXPORT)	1	9380671
	9-N12	9.735	CLUSTER, INST (AC-DELCO #9380721)	00-02	F (LS1, UB3, U12, U19) (EXPORT)	1	9380721
35.	9-N12	9.735	CONNECTOR, CSTR-INST (34-WAY F)	97-02	F	1	12065803

cardiagn.com

36.		N.S.	CONNECTOR, SW-HDLP				
37.	9-M9	2.485	SWITCH, HDLP (AC-DELCO #D1562D)	97-02	F	1	10195524
	9-M9	2.485	SWITCH, HDLP & I/P LP DIMR (W/HSG) (AC-DELCO #D1583E)	98	F (WX7)	1	10274031
38.	9-M10	2.490	SWITCH, I/P LP DIMR (AC-DELCO #D1579E)	97	F	1	12450124
	9-M10	2.490	SWITCH, I/P LP DIMR (AC-DELCO #D1584E)	98-02	F (WX7)	1	10287202
	9-M10	2.490	SWITCH, I/P LP DIMR (AC-DELCO #D1579E)	98-02	F (EXC WX7)	1	12450124
39.	9-M10	2.487	BEZEL, HDLP SW	97	F	1	10274033
	9-M10	2.487	BEZEL, HDLP SW	98-99	F (EXC WX7)	1	10274033
	9-M10	2.487	BEZEL, HDLP SW	98-02	F (WX7)	1	10274034
	9-M10	2.487	BEZEL, HDLP SW	00-02	F (EXC WX7)	1	10411477
	9-M10	2.487	BEZEL, HDLP SW	00-02	F (WX7) (EXPORT)	1	10411478
40.	9-M10	2.486	KNOB, HDLP SW	97	F	1	10247854
	9-M10	2.486	KNOB, HDLP SW	98-02	F (EXC WX7)	1	10247854
	9-M10	2.486	KNOB, HDLP SW	98-02	F (WX7)	1	10274032
41.		8.991	BULB, HDLP SW IND LP (HDLP SW)	97-02		1	10195525
42.	9-M10	2.490	CONNECTOR, SW-I/P LP DIMR (4-WAY F) (W/LEADS) (AC-DELCO #PT544)	97-02	F	1	12125632
43.		8.900	BOLT/SCREW, HWH W/FL WA M4.2X1.41X20, 6010M, 7253M, 12.5 OD, DOG PT (HDLP & I/P LP DIMR SW RET) (8.977)	97-02	F	2	11509709
44.	9-M9	2.485	CONNECTOR, SW-FOG LP (GRAY) (6-WAY F W/LEADS) (4.663)	97-02	F	1	12125665
	9-M26	4.710	CONNECTOR, SW-ELEK TRACT CONT (6-WAY F, W/LEADS, M/P 150) (AC-DELCO #PT1071)	97-02	F	1	15305931
45.	9-M9	2.485	SWITCH, FOG LP	98-02	F (T37)	1	10401243
	9-M9	2.485	SWITCH, FOG LP (FRT)	97-02	F (T96)	1	10273879
	9-M26	4.710	SWITCH, ELEK TRACT CONT	97-02	F (NW9)	1	10273877
	9-M26	4.056	SWITCH, A/TRNS SHFT PRGM (2ND GEAR START)	97-98	F (L36, M30)	1	10273378
	9-M26	4.056	SWITCH, A/TRNS SHFT PRGM (2ND GEAR START)	99-02	F (L36, M30) (EXC NW9)	1	10273878
46.	9-N16	12.243	SWITCH, R/CMPT LID REL	97-99	F (A90)	1	10060578
	9-N16	12.243	SWITCH, R/CMPT LID REL	00-02	F67	1	10060578
	9-N16	12.243	SWITCH, R/CMPT LID REL	00-02	F87 (A90)	1	10060578
47.	9-N16	12.243	CONNECTOR, SW-R/CMPT LID REL (2-WAY F W/LEADS, W/INDEX TAB OTR EDGE OF CAVITY B) (2.535) (AC-DELCO #PT146)	97-02	F	1	12085535
48.	9-M24	3.900	RELAY, F/PMP (BLACK) (5-WAY M) (USED W/CONNECTOR 15306045) (W/OUT BRKTS) (9.277) (AC-DELCO #15-8719)	97	F	1	12193601
	9-M24	3.900	RELAY F/PMP (GRAY) (4-WAY) (9.277) (AC-DELCO #15-[illegible]571)	98-02	F (LS1, L36)	1	12088567

cardiagn.com

						1P10–023	
49.	9–M24	3.900	**CONNECTOR**, RLY–F/PMP (TWO 12GA AND THREE 14GA WIRES) (8.855) (AC–DELCO #PT1205)	97–02	F	1	15306045
50.	9–M7	2.483	**BLOCK**, FUSE (I/P WRG)	97–02	F	1	12146075
51.		8.900	**BOLT/SCREW**, HWH W/FL WA M4.2X1.41X20, 6010M, 7253M, 12.5 OD, DOG PT (I/P WRG HARN FUSE BLK) (8.977)	97–02		1	11509709
52.	9–M7	2.483	**BRACKET**, FUSE BLK RET (UPPER)	97–02	F	1	12129299
53.	9–M7	2.483	**BRACKET**, FUSE BLK RET (LOWER)	97–02	F	1	12129298
54.	9–M7	2.483	**NUT**, I/P WRG HARN FUSE BLK BRKT (M4.2X1.41) (PUSH–IN FOR 12MM SQ HOLE) (10.252)	97–02	F	5	17988488
55.	9–M18	2.815	**RELAY**, HORN (BLACK) (5–WAY M) (USED W/CONNECTOR 15306045) (W/OUT BRKTS) (9.277) (AC–DELCO #15–8719)	97	F	1	12193601
	9–M18	2.815	**RELAY**, HORN (GRAY) (4–WAY) (9.277) (AC–DELCO #15–8571)	98–02	F	1	12088567
	9–M18	2.815	**RELAY**, HORN (OFF BLOWER) (5–TERMINAL) (9.277) (AC–DELCO #15–8721)	97	F67	1	12177233
56.	9–M17	2.575	**FLASHER**, HAZARD LP (1 1/2" DIA) (6 LP FLSHR) (AC–DELCO #SF552) (1 1/2" DIA, 6 LP FISHER)	97–02	F	1	491391
57.		N.S.	**CONNECTOR**, INLINE–TO I/P HARN (HDLP LVLG)				
58.	9–M11	2.530	**CONNECTOR**, INLINE–TO FWD LP HARN (BLACK) (10–WAY F) (W/LEADS) (AC–DELCO #PT588)	97	F	1	12125676
	9–M11	2.530	**CONNECTOR**, INLINE–TO FWD LP HARN (GREEN) (2–WAY M) (14.875)	97–02	F	1	12117275
	9–M11	2.530	**CONNECTOR**, INLINE–TO FWD LP HARN (WHITE) (8–WAY F) (W/LEADS) (2.535) (AC–DELCO #PT444)	97–02	F (L36)	1	12117271
	9–M11	2.530	**CONNECTOR**, INLINE–TO FWD LP HARN (WHITE) (8–WAY F) (W/LEADS) (2.535) (AC–DELCO #PT444)	97	F (LT1)	1	12117271
	9–M11	2.530	**CONNECTOR**, INLINE–TO FWD LP HARN (1–WAY F) (W/LEADS) (2.535) (AC–DELCO #PT170)	98–99	F (LS1, L36)	1	12101763
	9–M11	2.530	**CONNECTOR**, INLINE–TO FWD LP HARN (10–WAY M W/LEADS) (2.535) (AC–DELCO #PT215)	98	F	1	12101823
	9–M11	2.530	**CONNECTOR**, INLINE–TO FWD LP HARN (WHITE) (8–WAY F) (W/LEADS) (2.535) (AC–DELCO #PT444)	98–02	F (LS1)	1	12117271

cardiagn.com

	9-M11	2.530	CONNECTOR, INLINE-TO FWD LP HARN (GRAY) (10-WAY F) (W/LEADS) (AC-DELCO #PT587)	98-02	F	1	12125675
	9-M11	2.530	CONNECTOR, INLINE-TO FWD LP HARN (BLACK) (4-WAY M) (2.694)	98-02	F	1	12129135
	9-M11	2.530	CONNECTOR, INLINE-TO FWD LP HARN (GREY) (2-WAY F, M/P 150 SLD W/LEADS) (4.710) (AC-DELCO #PT1357)	97-99	F	2	15306302
	9-M11	2.530	CONNECTOR, INLINE-TO FWD LP HARN (10-WAY M W/LEADS) (2.535) (AC-DELCO #PT215)	99-02	F (LS1, NW9)	1	12101823
	9-M11	2.530	CONNECTOR, INLINE-TO FWD LP HARN (BLACK) (10-WAY F) (W/LEADS) (AC-DELCO #PT588)	99-02	F	1	12125676
	9-M11	2.530	CONNECTOR, INLINE-TO FWD LP HARN (1-WAY F) (MP 280) (2.535)	01-02	F (LS1, M30)	1	12065172
59.		N.S.	CONNECTOR, INLINE-TO CROSSBODY HARN				
60.		N.S.	CONNECTOR, INLINE-TO I/P HARN (FWD LP)				
61.		N.S.	CONNECTOR, 48 WAY				
62.	9-M18	2.815	CONNECTOR, RLY-HORN (BLACK) (6-WAY F) (W/O LEADS) (3.900)	97-02	F	1	12110541
63.	9-M18	2.892	CONNECTOR, FLSHR-T/SIG LP (BLACK) (2-WAY F) (W/LEADS) (2.575) (AC-DELCO #PT663)	97-02	F	1	12126032
64.	9-N4	8.855	CONNECTOR, RLY-BLO MOT (BLACK) (6-WAY F) (W/O LEADS) (3.900)	97-02	F	1	12110541
65.	9-N6	9.277	RELAY, BLO MOT (BLACK) (5-WAY M) (USED W/CONNECTOR 15306045) (W/OUT BRKTS) (AC-DELCO #15-8719)	97-02	F	1	12193601
	9-N4	8.855	RELAY, BLO MOT (BLACK) (5-WAY M) (USED W/CONNECTOR 15306045) (W/OUT BRKTS) (9.277) (AC-DELCO #15-8719)	97-02	F	1	12193601
	9-N6	9.277	RELAY, BLO MOT (5-TERMINAL) (AC-DELCO #15-8721)	98-02	F	1	12177233
66.		N.S.	CONNECTOR, INLINE-TO I/P HARN (FWD LP)				
67.	9-M18	2.892	CONNECTOR, FLSHR-T/SIG LP (BLACK) (2-WAY F) (W/LEADS) (2.575) (AC-DELCO #PT663)	97-02	F	1	12126032
68.	9-M18	2.892	FLASHER, T/SIG LP (YELLOW) (2 LP FLSHR) (AC-DELCO #SF224)	97	F (EXC Y90)	1	10041074

cardiagn.com

	9-M18	2.892	FLASHER, T/SIG LP (YELLOW) (2 LP FLSHR) (AC-DELCO #SF224) (YELLOW, 2LP FLASHER)	98-02	F (EXC T72, T79)	1	10041074
	9-M18	2.892	FLASHER, T/SIG LP (AC-DELCO #9442495)	98-02	F (T79) (EXPORT)	1	9442495
	9-M18	2.892	FLASHER, T/SIG LP (AC-DELCO #11515735)	98-02	F (T72) (EXPORT)	1	11515735
69.	9-M18	2.892	CLIP, T/SIG LP FLSHR	97	F	1	25534019
	9-M18	2.892	CLIP, T/SIG LP FLSHR	98-02	F (EXC T79)	1	25534019
70.	9-M18	2.892	CONNECTOR, FLSHR-T/SIG LP (BLACK) (2-WAY F) (W/LEADS) (2.575) (AC-DELCO #PT663) ...	97-02	F	1	12126032
71.	9-M18	2.892	FLASHER, T/SIG LP (YELLOW) (2 LP FLSHR) (AC-DELCO #SF224) (YELLOW, 2LP FLASHER)	98-02	F (EXC T72, T79)	1	10041074
	9-M18	2.892	FLASHER, T/SIG LP (AC-DELCO #11515735)	97	F (T90) (EXPORT)	1	11515735
	9-M18	2.892	FLASHER, T/SIG LP (AC-DELCO #9442495)	98-02	F (T79) (EXPORT)	1	9442495
	9-M18	2.892	FLASHER, T/SIG LP (AC-DELCO #11515735)	98-02	F (T72) (EXPORT)	1	11515735
72.	9-N23	13.100	CONNECTOR, INLINE-TO CROSSBODY HARN (BLACK) (6-WAY M W/LEADS) (AC-DELCO #PT1013)	97-02	F	1	15305872
73.	9-M11	2.530	CONNECTOR, INLINE-TO ENG HARN (4-WAY MALE) (W/LEADS) (AC-DELCO #PT1135)	97-02	F	1	15306008
74.	9-M11	2.530	CONNECTOR, INLINE-TO ENG HARN (NATURAL) (10-WAY M W/LEADS) (2.535) (AC-DELCO #PT215)	97-02	F	1	12101823
75.		N.S.	CONNECTOR, INLINE-TO ENG HARN (BLUE)		F	1	
76.	9-M11	2.530	CONNECTOR, INLINE-TO I/P HARN (BLUE) (10-WAY F) (W/LEADS) (AC PT224) (2.535) (AC-DELCO #PT224)	97-02	F	1	12101832
77.	9-M11	2.530	CONNECTOR, INLINE-TO I/P HARN (10-WAY F W/LEADS) (2.535) (AC-DELCO #PT150) ...	97-02	F	1	12101762
78.	9-M11	2.530	CONNECTOR, INLINE-TO I/P HARN (4-WAY F) (W/LEADS) (2.535) (AC-DELCO #PT109) ...	97-02	F	1	12085487
79.	9-M11	2.530	CONNECTOR, INLINE-TO I/P HARN (6-WAY F W/LEADS) (13.090) (AC-DELCO #PT1032) .	97-02	F	1	15305888
80.	9-N14	9.765	LAMP, SECURITY IND	97-02	F (UA6)	1	10257168
81.	9-N14	9.765	CONNECTOR, LP-THEFT DTRNT IND (RED) (2-WAY F) (W/LEADS) (2.535) (AC-DELCO #PT240)	97-02	F	1	12101848

RPO DEFINITIONS
AU0 - LOCK CONTROL,REMOTE ENTRY(KEYLESS ENTRY SYSTEM)

cardiagn.com

C49 – DEFOGGER,REAR WINDOW,ELECTRIC
C60 – AIR CONDITIONER,FRONT,MANUAL CONTROLS
ETA – HARNESS,INSTRUMENT PANEL,#1
LS1 – ENGINE GAS, 8 CYL, 5.7L, SFI, ALUMINUM ENGINE
LT1 – ENGINE–GAS, 8 CYL, 5.7L(5.7P),MFI,HO
L36 – ENGINE GAS, 6 CYL, 3.8K, MFI, V6, HO (ERV6 SERIES)
M30 – TRANSMISSION,AUTOMATIC 4 SPEED,4L60E,ELECTRONIC
NW9 – TRACTION CONTROL ELECTRONIC
T37 – LAMP,FOG(DELUXE)
T62 – LIGHTING DAYTIME RUNNING ----DELETE
T72 – HEADLAMPS,LH RULE OF THE ROAD(EXPORT)
T79 – LAMPS,REAR FOG(EXPORT)
T82 – HEADLAMPS,AUTOMATIC ON/OFF CONTROL.
T90 – LAMP,SIGNALING AND MARKER(EXPORT)
T96 – LAMP,FRONT FOG
UA6 – THEFT DETERRENT SYSTEM
UB3 – CLUSTER,INSTRUMENT(OIL,COOLANT TEMPERATURE,VOLTMETER,TACHOMETER,TRIP ODOMETER)
UC2 – SPEEDOMETER INST, KILO & MILES, KILO ODOMETER, POSITIVE BIAS(EXPORT)
UK1 – RADIO FREQUENCY(JAPANESE)
UL0 – RADIO AM/FM STEREO, SEEK/SCAN, AUTO REV MUSIC SEARCH CASS, AUTO TONE, CLOCK, ETR.
UL2 – RADIO FREQUENCY(EUROPEAN)
UL8 – FREQUENCIES–SAUDI ARABIAN RADIO(EXPORT)
UM6 – RADIO,AM/FM STEREO,CASSETTE,ETR,INCLUDES CLOCK
UN0 – RADIO,AM/FM,STEREO,SEEK/SCAN,COMPACT DISC,AUTO TONE,CLOCK,ETR
UQ0 – SPEAKER SYSTEM,4,DUAL FRONT DOOR MOUNTED,DUAL STANDARD RANGE PACKAGE SHELF/QUARTER
UW3 – RADIO AM/FM STEREO, SEEK/SCAN, AUTO REV MUSIC SEARCH CASSETTE, DATA SYSTEM, CLOCK, ETR
UZ7 – SPEAKER SYSTEM 8, QUAD FRT DR MTD, DUAL SAIL PNL, DUAL RR HATCH, AMPLIFIER
U12 – SPEEDOMETER,DUAL SCALE(W/KILOMETER ODOMETER)(EXPORT)
U19 – SPEEDOMETER,INSTRUMENT(EXPORT)
U59 – SPEAKER SYSTEM 8, QUAD FRT DR MTD, QUAD SAIL PNL, AMPLIFIER
U62 – SPEAKER SYSTEM,4,DUAL COAX FRONT,DUAL COAX PACKAGE SHELF
VD1 – PROVISION OPTIONS,EUROPE(EXPORT)
WX7 – WIRING PROVISIONS
W52 – ENTERTAINMENT SYSTEM OPTION B
W53 – ENTERTAINMENT SYSTEM OPYION C
W54 – ENTERTAINMENT SYSTEM OPTION D
W55 – ENTERTAINMENT SYSTEM OPYION E
W56 – ENTERTAINMENT SYSTEM OPTION F

cardiagn.com

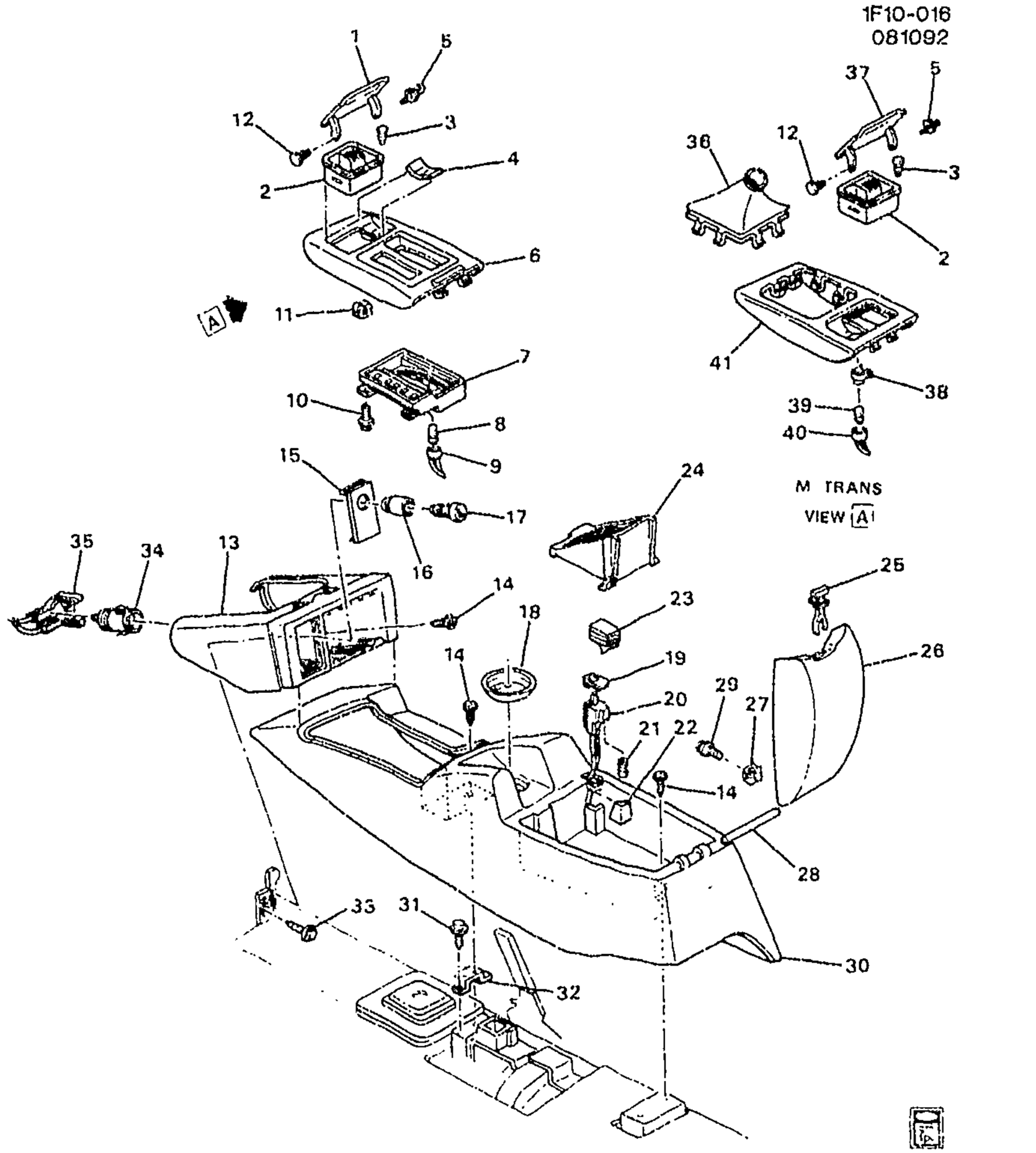

1993 F CONSOLE/FLOOR

1.	9–A19	10.240	COVER, ASHTRAY OPG (PART OF 6) (10.256)	93 F (MD8)	1	17997771
2.	9–A23	10.242	ASHTRAY, F/FLR CNSL (PART OF 6, 41) (12.009)	93 F	1	10261420
3.	9–A23	10.242	INSULATOR, F/FLR CNSL ASHTRAY DR (PART OF 6, 41)	93 F	1	17997748
4.	9–A19	10.240	MAT, F/FLR CNSL TR PLT (PART OF 6)	93 F	1	10264077
5.	9–N16	12.009	SPRING, ASHTRAY CVR (PART OF 6, 41)	93 F	1	17997760

cardiagn.com

6.	9-A19	10.240	**PLATE**, F/FLR CNSL TRANS SHFT OPG TR (YELLOW LETTERED) (INCLS 1-5, 7, 10-12)	93	F (LT1, MD8, GU5)	1	10244182
	9-A19	10.240	**PLATE**, F/FLR CNSL TRANS SHFT OPG TR (YELLOW LETTERED) (INCLS 1-5, 7, 10-12)	93	F (L32, MD8)	1	10244182
	9-A19	10.240	**PLATE**, F/FLR CNSL TRANS SHFT OPG TR (YELLOW LETTERED) (INCLS 1-5, 7, 10-12)	93	F (LT1, MD8, GU2)	1	10244183
7.		N.S.	**INDICATOR**, A/TRNS CONT (PART OF 6)				
8.		8.991	**BULB**, WEDGE .08 AMPS 19/32 LG 0.3 POWER (A/TRANS CONT IND LP) (AC-DELCO #9436790)	93		1	9436790
9.	9-M26	4.022	**SOCKET**, A/TRNS DIAL IND LP (W/LEADS) (AC-DELCO #LS28)	93	F	1	12125966
10.		8.900	**BOLT/SCREW**, HWH W/FL WA M4.2X1.41X20, 6010M, 7253M, 12.5 OD, DOG PT (F/FLR CNSL) (PART OF 6) (8.977)	93		4	11509709
11.	9-A19	10.240	**NUT**, F/FLR CNSL (PART OF 6) (M4.2X1.41) (PUSH-IN FOR 12MM SQ HOLE) (10.252)	93	F	4	17988488
12.	9-A23	10.242	**RETAINER**, ASHTRAY CVR (PART OF 6, 41)	93	F	1	17997870
13.	9-A19	10.240	**TRAY**, F/FLR CNSL TAPE STOR (PART OF 30)	93	F	1	16754483
14.		8.977	**SCREW**, HEX W/FLAT WA (F/FLR CNSL)	93		4	12337828
15.	9-N11	9.709	**BEZEL**, C/LTR (INCLS 16, 34)	93	F87	1	10220460
16.	9-N11	9.709	**RETAINER**, C/LTR HSG (PART OF 15) (CASCO)	93	F	1	11516144
17.	9-N11	9.709	**LIGHTER**, CIG (BLACK) (CASCO) (W/LARGE, PLASTIC KNOB)	93	F	1	11516140
18.	9-A19	10.240	**MAT**, F/FLR CNSL COMPT (CUP HLDR) (PART OF 30) (CUP)	93	F	1	17997732
19.	9-A26	10.275	**RETAINER**, I/P COMPT LP	93	F	1	12089143
20.	9-C26	11.927	**SOCKET**, I/P C/LP (CNSL BIN) (W/SW) (10.275) (AC-DELCO #LS55)	93	F87	1	12159663
21.		8.991	**TRADE#194**, 12V, 2CP (I/P C/LP) (CNSL BIN) (AC-DELCO #L194)	93		1	9421330
22.	9-A23	10.242	**LENS**, F/FLR CNSL ASHTRAY (PART OF 30)	93	F	1	17997743
23.		8.958	**TAPE**, DUAL LK FSTN (44.5MM X 44.5MM - 5 PER PKG) (F/FLR CNSL DISC STOR TRAY) (2.483)	93		1	12520053
24.	9-A23	10.242	**TRAY**, F/FLR CNSL DISC STOR	93	F	1	10247556
25.	9-A25	10.268	**LATCH**, F/FLR CNSL COMPT DR (PART OF 26)	93	F	1	17997750
26.	9-A23	10.242	**DOOR**, F/FLR CNSL COMPT (W/A/RST) (INCLS 25)	93	F	1	16754487
27.	9-A19	10.240	**NUT**, F/FLR CNSL (PART OF 30) (M4.2X1.41) (PUSH-IN FOR 12MM SQ HOLE) (10.252)	93	F	2	17988488

cardiagn.com

28.	9–A23	10.242	**PIN**, F/FLR CNSL COMPT DR HGE (PART OF 30)	93	F	1	16760032
29.		8.900	**BOLT/SCREW**, HWH W/FL WA M4.2X1.41X20, 6010M, 7253M, 12.5 OD, DOG PT (F/FLR CNSL) (PART OF 30) (8.977)	93		2	11509709
30.	9–A19	10.240	**CONSOLE**, F/FLR (INCLS 13, 18, 22, 27–29)	93	F	1	16754481
31.		8.977	**SCREW**, HEX W/FLAT WA (F/FLR CNSL BRKT)	93		2	12337828
32.	9–A19	10.240	**BRACKET**, F/FLR CNSL	93	F	1	10159085
33.		8.977	**SCREW**, HEX W/FLAT WA (I/P)	93		2	12337828
34.	9–N11	9.709	**HOUSING**, C/LTR (PART OF 15) (MATES W/CONN 12085504, (CASCO) 1–PIN CONN)	93	F	1	11516142
35.	9–N11	9.709	**CONNECTOR**, C/LTR (2–WAY M/F) (W/LEADS) (USE T/W 11516142 HOUSING C/LTR) (2.535) (AC–DELCO #PT125)	93	F	2	12085504
36.	9–M25 9–M25	4.015	**BOOT**, M/TRNS CONT LVR (PART OF 41) (ATCH TO CNSL TRIM PLT)	93	F	1	17997785
37.	9–A19	10.240	**COVER**, ASHTRAY OPG (PART OF 41) (10.256)	93	F (M28, M29, M49)	1	17997757
38.	9–N16	12.012	**SHIELD**, ASHTRAY LP (PLASTIC) (PART OF 41) (PAINT TO MATCH)	93	F	1	25513268
39.		8.991	**TRADE#194**, 12V, 2CP (ASHTRAY LP) (AC–DELCO #L194)	93		1	9421330
40.	9–N16	12.012	**SOCKET** ASHTRAY LP (1–WAY M) (9.709)	93	F	1	12125055
41.	9–A19	10.240	**PLATE**, F/FLR CNSL TRANS SHFT OPG TR (YELLOW LETTERED) (INCLS 2, 3, 5, 12, 36–38)	93	F (M49)	1	10132177
	9–A19	10.240	**PLATE**, F/FLR CNSL TRANS SHFT OPG TR (YELLOW LETTERED) (INCLS 2, 3, 5, 12, 36–38)	93	F (M28, M29)	1	10159082

RPO DEFINITIONS

GU2 – AXLE,REAR,2 73 RATIO
GU5 – AXLE,REAR,3.23 RATIO
LT1 – ENGINE–GAS, 8 CYL, 5.7L(5.7P),MFI,HO
L32 – ENGINE,3.4L,V6,(3.4S),SFI,OHV
MD8 – TRANSMISSION,AUTOMATIC 4–SPEED(THM700R4/4L60)
M28 – TRANSMISSION MAN, 6 SPD, BORG WARNER, 85MM, 3.36 1ST, 1.35 3RD
M29 – TRANSMISSION MAN, 6 SPD, BORG WARNER, 85MM, 2.97 1ST, 1.44 3RD
M49 – TRANSMISSION MAN 5 SPD, BORG WARNER, 77MM, 3.75 1ST, .76 5TH, O/D

cardiagn.com

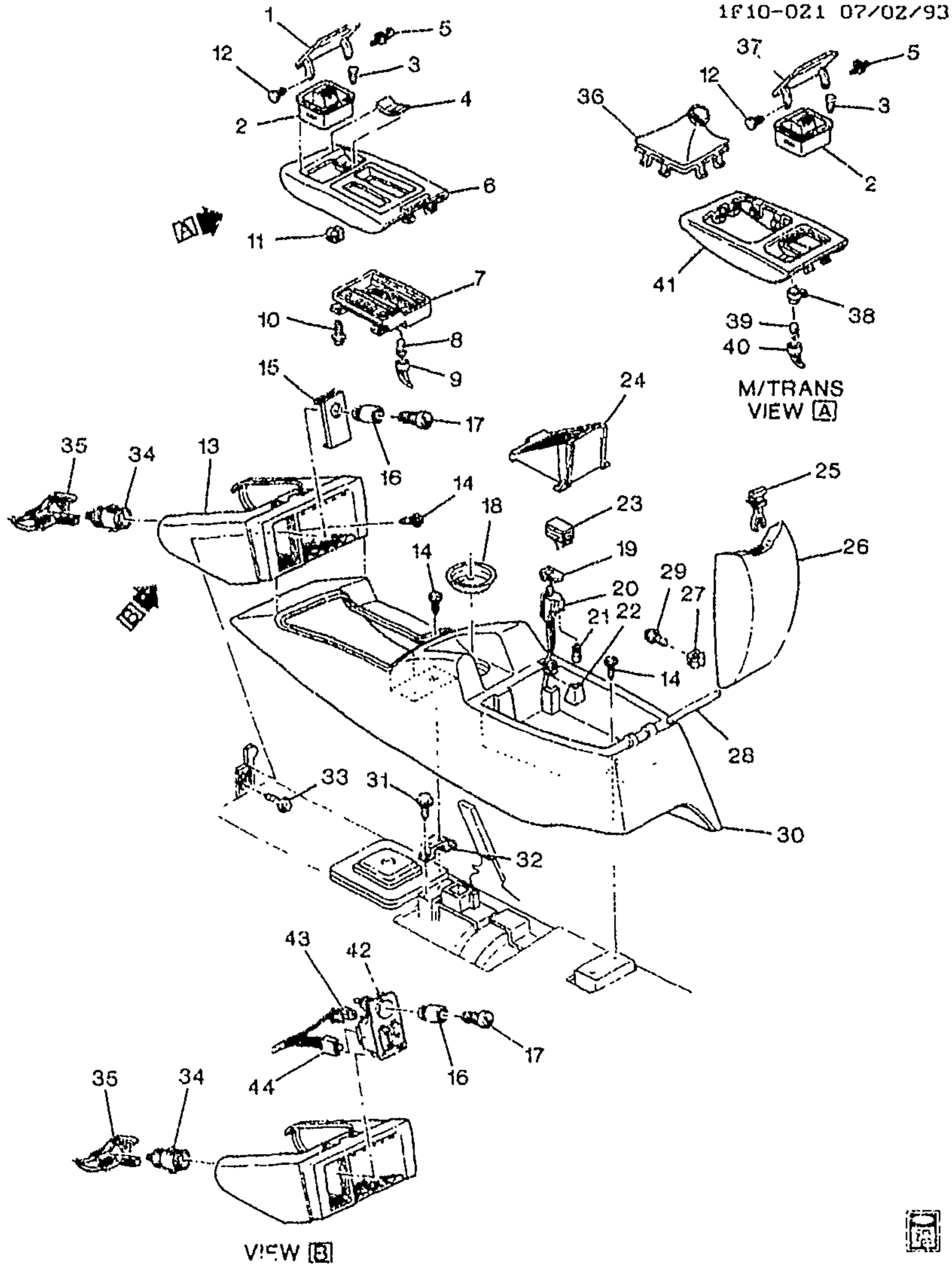

1994-1995 F CONSOLE/FLOOR

1.	9-A19	10.240	COVER, ASHTRAY OPG (PART OF 6) (10.256)	94-96 F (M30)	1	17997771
2.	9-A23	10.242	ASHTRAY, F/FLR CNSL (PART OF 6, 41) (12.009)	94-96 F	1	10261420

cardiagn.com

3.	9–A23	10.242	INSULATOR, F/FLR CNSL ASHTRAY DR (PART OF 6, 41)	94–96	F	1	17997748
4.	9–A19	10.240	MAT, F/FLR CNSL TR PLT (PART OF 6)	94–96	F (M30)	1	10264077
5.	9–A23	10.242	SPRING, F/FLR CNSL ASHTRAY DR (PART OF 6, 41)	94–96	F	1	10291612
	9–A23	10.242	SPRING, F/FLR CNSL ASHTRAY DR (PART OF 6, 41) (12.009)	94–96	F (M30)	1	17997760
6.	9–A19	10.240	PLATE, F/FLR CNSL TRANS SHFT OPG TR (WHITE LETTERED) (INCLS 1–5, 7, 10–12) (BLACK) (INCLS IND, ASHTRAY)	94–96	F (LT1, M30, GU5)	1	10261418
	9–A19	10.240	PLATE, F/FLR CNSL TRANS SHFT OPG TR (WHITE LETTERED) (INCLS 1–5, 7, 10–12) (BLACK) (INCLS IND, ASHTRAY)	94–95	F (L32, M30)	1	10261418
	9–A19	10.240	PLATE, F/FLR CNSL TRANS SHFT OPG TR (WHITE LETTERED) (INCLS 1–5, 7, 10–12) (INCLS IND, ASHTRAY)	94–96	F (LT1, M30, GU2)	1	10261419
	9–A19	10.240	PLATE, F/FLR CNSL TRANS SHFT OPG TR (WHITE LETTERED) (INCLS 1–5, 7, 10–12) (BLACK) (INCLS IND, ASHTRAY)	95–96	F (L36, M30)	1	10261418
7.		N.S.	INDICATOR, A/TRNS CONT (PART OF 6)				
8.		8.991	BULB, WEDGE .08 AMPS 19/32 LG 0.3 POWER (A/TRANS CONT IND LP) (AC–DELCO #9436790)	94–96		1	9436790
9.	9–M26	4.022	SOCKET, A/TRNS DIAL IND LP (W/LEADS) (AC–DELCO #LS28)	94–96	F	1	12125966
10.		8.900	BOLT/SCREW, HWH W/FL WA M4.2X1.41X20, 6010M, 7253M, 12.5 OD, DOG PT (F/FLR CNSL) (PART OF 6) (8.977)	94–96		4	11509709
11.	9–A19	10.240	NUT, F/FLR CNSL (PART OF 6) (M4.2X1.41) (PUSH–IN FOR 12MM SQ HOLE) (10.252)	94–96	F	4	17988488
12.	9–A23	10.242	RETAINER, ASHTRAY CVR (PART OF 6, 41)	94–96	F	1	17997870
13.	9–A19	10.240	TRAY, F/FLR CNSL TAPE STOR (PART OF 30)	94–96	F	1	16754483
14.		8.977	SCREW, HEX W/FLAT WA (F/FLR CNSL)	94–96		4	12337828
15.	9–N11	9.709	BEZEL, C/LTR (INCLS 16, 34)	94–96	F87	1	10220460
16.	9–N11	9.709	RETAINER, C/LTR HSG (PART OF 15, 42) (CASCO)	94–96	F	1	11516144
17.	9–N11	9.709	LIGHTER, CIG (BLACK) (CASCO) (W/LARGE, PLASTIC KNOB)	94–96	F	1	11516140
18.	9–A19	10.240	MAT, F/FLR CNSL COMPT (CUP HLDR) (PART OF 30) (CUP)	94–96	F	1	17997732
19.	9–A26	10.275	RETAINER, I/P COMPT LP	94–96	F	1	12089143
20.	9–A26	10.275	SOCKET, F/FLR CNSL (CNSL BIN) (W/SW) (AC–DELCO #LS55)	94–96	F	1	12159663

cardiagn.com

			(CNSL BIN) (AC-DELCO #L194)				
22.	9-A23	10.242	LENS, F/FLR CNSL ASHTRAY (PART OF 30)	94-96	F	1	17997743
23.		8.958	TAPE, DUAL LK FSTN (44.5MM X 44.5MM - 5 PER PKG) (F/FLR CNSL DISC STOR TRAY) (2.483)	94-96		1	12520053
24.	9-A23	10.242	TRAY, F/FLR CNSL DISC STOR	94	F	1	10247556
25.	9-A25	10.268	LATCH, F/FLR CNSL COMPT DR (PART OF 26)	94-96	F	1	17997750
26.	9-A23	10.242	DOOR, F/FLR CNSL COMPT (W/A/RST) (INCLS 25)	94-96	F	1	16754487
27.	9-A19	10.240	NUT, F/FLR CNSL (PART OF 30) (M4.2X1.41) (PUSH-IN FOR 12MM SQ HOLE) (10.252)	94-96	F	2	17988488
28.	9-A23	10.242	PIN, F/FLR CNSL COMPT DR HGE (PART OF 30)	94-96	F	1	16760032
29.		8.900	BOLT/SCREW, HWH W/FL WA M4.2X1.41X20, 6010M, 7253M, 12.5 OD, DOG PT (F/FLR CNSL) (PART OF 30) (8.977)	94-96		2	11509709
30.	9-A19	10.240	CONSOLE, F/FLR (INCLS 13, 18, 22, 27-29)	94-96	F	1	16754481
31.		8.977	SCREW, HEX W/FLAT WA (F/FLR CNSL BRKT)	94-96		2	12337828
32.	9-A19	10.240	BRACKET, F/FLR CNSL	94-96	F	1	10159085
33.		8.977	SCREW, HEX W/FLAT WA (I/P)	94-96		2	12337828
34.	9-N11	9.709	HOUSING, C/LTR (PART OF 15, 42) (MATES W/CONN 12085504, (CASCO) 1-PIN CONN)	94-96	F	1	11516142
35.	9-N11	9.709	CONNECTOR, C/LTR (2-WAY M/F) (W/LEADS) (USE T/W 11516142 HOUSING C/LTR) (2.535) (AC-DELCO #PT125)	94-96	F	2	12085504
36.	9-M25 9-[illegible]25	4.015	BOOT, M/TRNS CONT LVR (PART OF 41) (ATCH TO CNSL TRIM PLT)	94-96	F	1	17997785
37.	9-A19	10.240	COVER, ASHTRAY OPG (PART OF 41) (10.256)	94-96	F (MM6, M49)	1	17997757
38.	9-N16	12.012	HOUSING, ASHTRAY LP (PART OF 41) (PAINT TO MATCH)	94-96	F (MM6, M49)	1	25513268
39.		8.991	TRADE#194, 12V, 2CP (ASHTRAY LP) (AC-DELCO #L194)	94-96		1	9421330
40.	9-N16	12.012	SOCKET, ASHTRAY LP (1-WAY M) (9.709)	94-96	F	1	12125055
41.	9-A19	10.240	PLATE, F/FLR CNSL TRANS SHFT OPG TR (WHITE LETTERED) (INCLS 2, 3, 5, 12, 36-38)	94-96	F (MM6)	1	10228264
	9-A19	10.240	PLATE, F/FLR CNSL TRANS SHFT OPG TR (WHITE LETTERED) (INCLS 2, 3, 5, 12, 36-38)	94-96	F (M49)	1	10228265
42.	9-N25	14.483	SWITCH, CONV TOP (INCLS 16, 34) (BZL IS PART OF SW)	94	F67 (LT1)	1	10195571
	9-N25	14.483	SWITCH, CONV TOP (INCLS 16, 34) (BZL IS PART OF SW)	94	F67 (L32)	1	10195571

cardiagn.com

	9–N25	14.483	SWITCH, CONV TOP (INCLS 16, 34) (BZL IS PART OF SW)	95	F67 (EXC NW9)	1	10195571
	9–N25	14.483	SWITCH, CONV TOP (INCLS 16, 34) (BZL IS PART OF SW)	96	FP67 (LT1) (EXC NW9) .	1	10195571
	9–N25	14.483	SWITCH, CONV TOP (INCLS 16, 34) (BZL IS PART OF SW)	96	FP67 (L36, M49)	1	10195571
	9–M26	4.710	SWITCH, ELEK TRAC CONT (INCLS 16, 34) (AC–DELCO #10284641)	95–96	F87 (NW9)	1	10284641
	9–M26	4.710	SWITCH, ELEK TRACT CONT & F/TOP (INCLS 16, 34) (AC–DELCO #10195559)	95–96	F67 (NW9)	1	10195559
	9–M25	4.020	SWITCH, A/TRNS SHFT PRGM & F/TOP (INCLS 16, 34)	96	F67 (L36, M30)	1	10265719
	9–N25	14.483	SWITCH, A/TRNS SHFT PRGM & F/TOP (INCLS 16, 34) (4.020)	96	F67 (L36, M30)	1	10265719
	9–M25	4.020	SWITCH, A/TRNS SHFT PRGM & F/TOP (INCLS 16, 34)	96	F67	1	10265762
43.	9–M26	4.710	CONNECTOR, SW–ELEK TRACT CONT (3–WAY F) (W/LEADS) (2.530) (AC–DELCO #PT1490)	95–96	F	1	12117320
44.		8.965	CONNECTOR, W/LEADS (SW–F/TOP) (2.535) (AC–DELCO #PT208)	94–96	F	1	12101936

RPO DEFINITIONS
GU2 – AXLE,REAR,2.73 RATIO
GU5 – AXLE,REAR,3.23 RATIO
LT1 – ENGINE–GAS, 8 CYL, 5.7L(5.7P),MFI,HO
L32 – ENGINE,3.4L,V6,(3.4S),SFI,OHV
L36 – ENGINE GAS, 6 CYL, 3.8K, MFI, V6, HO (ERV6 SERIES)
MM6 – TRANSMISSION MAN 6 SPD, BORG WARNER, 85MM, 1ST 2.66, 6TH 0.50, O/D
M30 – TRANSMISSION,AUTOMATIC 4 SPEED,4L60E,ELECTRONIC
M49 – TRANSMISSION MAN 5 SPD, BORG WARNER, 77MM, 3.75 1ST, .76 5TH, O/D
NW9 – TRACTION CONTROL ELECTRONIC

cardiagn.com

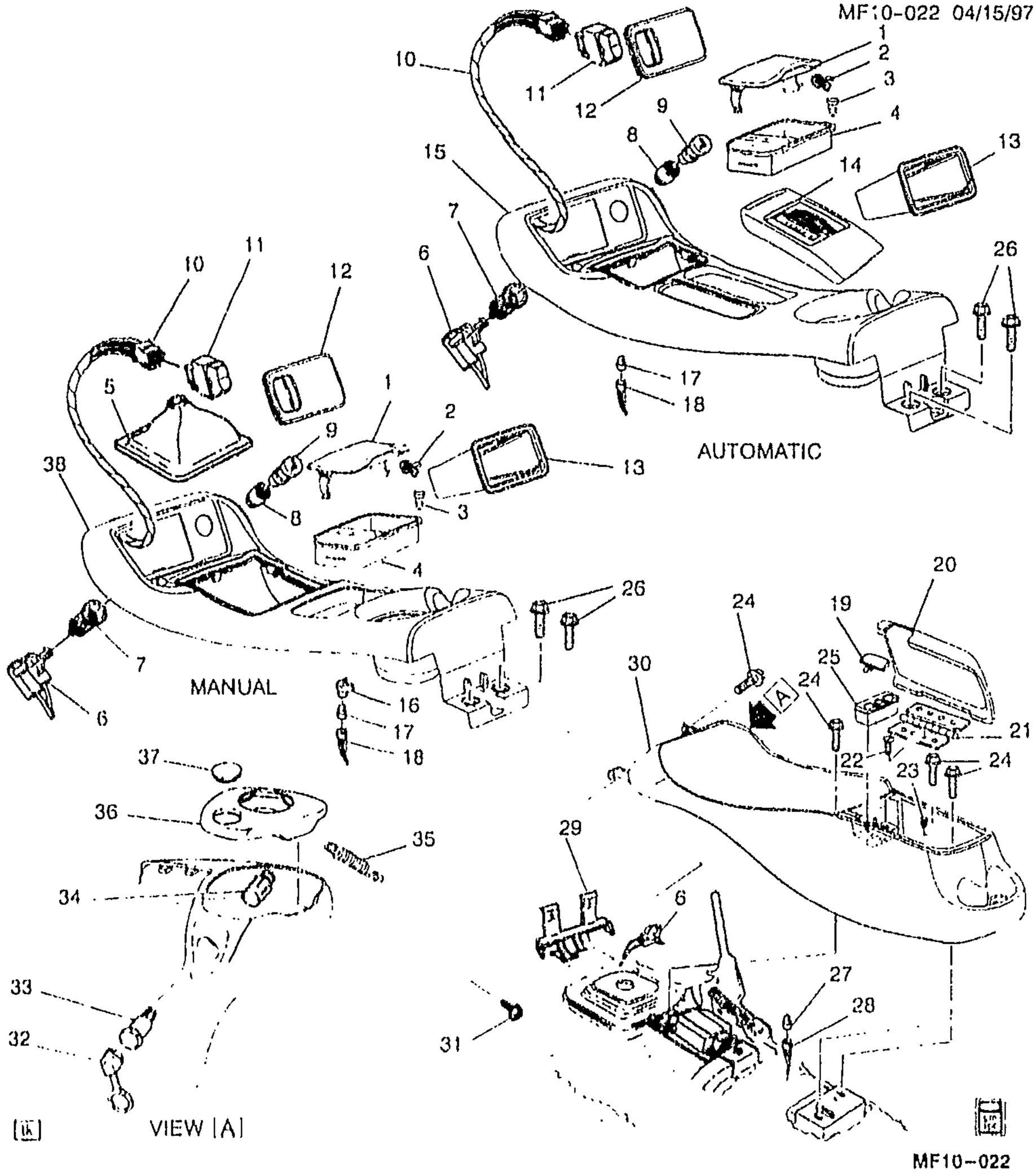

MF10-022

1997 F CONSOLE/FLOOR

1.	9-N16	12.009	COVER, ASHTRAY (PART OF 15, 38)	97 F (M49, MM6)	1	10271366
	9-N16	12.009	COVER, ASHTRAY (PART OF 15, 38) (GRAPHITE)	97 F (M30)	1	10408634
2.	9-A23	10.242	SPRING, F/FLR CNSL ASHTRAY	97 F	1	10291612

cardiagn.com

3.	9-A23	10.242	**BUMPER**, F/FLR CNSL ASHTRAY DR (PART OF 15, 38) (7.0MM) (12.009)	97	F	2	17997865
4.	9-A23	10.242	**ASHTRAY**, F/FLR CNSL (PART OF 15, 38) (12.009)	97	F	1	10261420
5.	9-M25 9-M25	4.015	**BOOT**, M/TRNS CONT LVR (GRAY) (ATCH TO CNSL TRIM PLATE)	97	F	1	10271369
6.	9-N11	9.709	**CONNECTOR**, C/LTR (2-WAY M/F) (W/LEADS) (USE T/W 11516142 HOUSING C/LTR) (2.535) (AC-DELCO #PT125)	97	F	2	12085504
7.	9-N11	9.709	**HOUSING**, C/LTR (PART OF 15, 38) (MATES W/CONN 12085504, (CASCO) 1-PIN CONN)	97	F	1	11516142
8.	9-N11	9.709	**RETAINER**, C/LTR HSG (PART OF 15, 38) (CASCO)	97	F	1	11516144
9.	9-N11	9.709	**LIGHTER**, CIG (BLACK) (CASCO) (W/LARGE, PLASTIC KNOB)	97	F	1	11516140
10.	9-N25	14.483	**CONNECTOR**, SW-F/TOP (4-WAY F) (W/LEADS) (280 SERIES) (12.243) (AC-DELCO #PT548)	97	F67	1	12125636
		N.S.	**CONNECTOR**, SW-ELEK TRACT CONT				
11.	9-N25	14.483	**SWITCH**, CONV TOP (TO BE USED W/CONN 12191825) (BLACK)	97	F67	1	10402721
	9-M26	4.710	**SWITCH**, ELEK TRACT CONT	97	F (NW9)	1	10273877
12.	9-A19	10.240	**PLATE**, F/FLR CNSL ACSRY TR	97	F67	1	10280510
13.	9-A19	10.240	**COMPARTMENT**, F/FLR CNSL	97	F87	1	10283438
14.		N.S.	**HOUSING**, A/TRNS CONT IND LP (PART OF 15)				
		N.S.	**SLIDE**, A/TRNS CONT IND (PART OF 15)				
15.	9-A19	10.240	**PLATE**, F/FLR CNSL TRANS SHFT OPG TR (INCLS 1-4, 7, 8, 14) (NEW C/LTR CONNECTOR P/N 15305919 REQ'D FOR MY 97-98)	97	F (LT1, M30, GU2)	1	10297908
	9-A19	10.240	**PLATE**, F/FLR CNSL TRANS SHFT OPG TR (REQUIRES CIG LIGHTER CONN 15305919) (INCLS 1-4, 7, 8, 14)	97	F (LT1, M30, GU5)	1	10297907
	9-A19	10.240	**PLATE**, F/FLR CNSL TRANS SHFT OPG TR (REQUIRES CIG LIGHTER CONN 15305919) (INCLS 1-4, 7, 8, 14)	97	F (L36, M30)	1	10297907
16.	9-N16	12.012	**HOUSING**, ASHTRAY LP (PART OF 38) (PAINT TO MATCH)	97	F (MM6, M49)	1	25513268
17.		8.991	**TRADE#194**, 12V, 2CP (ASHTRAY LP) (AC-DELCO #L194)	97		1	9421330
18.	9-N16	12.012	**SOCKET**, ASHTRAY LP (1-WAY	97	F	1	12125055

cardiagn.com

22.	9–A23	10.242	BOLT, F/FLR CNSL COMPT DR HGE (M4.2X1.41X20) (8.977)	97	F	6	11508561
23.	9–A23	10.242	BUMPER, F/FLR CNSL COMPT DR (7.0MM) (12.009)	97	F	1	17997865
24.		8.977	SCREW, HEX TAP M6.3X1.81X20 W/FL WA PH ORG (F/FLR CNSL)	97		AR	11504037
25.	9–A19	10.240	HOLDER, F/FLR CNSL COIN (BLACK)	97	F	1	10245028
26.		8.900	BOLT/SCREW, HWH W/FL WA M4.2X1.41X20, 6010M, 7253M, 12.5 OD, DOG PT (F/FLR CNSL TRANS SHFT OPG TR PLT) (8.977)	97	F	2	11509709
27.		8.991	BULB, WEDGE .08 AMPS 19/32 LG 0.3 POWER (A/TRNS CONT POSN IND) (AC–DELCO #9436790)	97	F	1	9436790
28.	9–M26	4.022	SOCKET, A/TRNS DIAL IND LP (W/LEADS) (AC–DELCO #LS28)	97	F	1	12125966
29.	9–A18	10.230	BRACKET, I/P LWR TIE BAR (CTR LWR)	97	F	1	10269101
30.		N.S.	CONSOLE, F/FLR				
31.		8.977	SCREW, HEX W/FLAT WA (I/P)	97	F	2	12337828
32.	9–N11	9.709	PLUG, ACSRY PWR RCPT OPG (NOT USED AFTER 1998)	97	F	1	12450056
33.	9–N11	9.709	RECEPTACLE, ACSRY PWR	97	F	1	10202970
34.	9–N11	9.709	RETAINER, ACSRY PWR RCPT (NOT USED AFTER 1998)	97	F	1	10202971
35.		N.S.	SPRING, F/FLR CNSL CUP HLDR (PART OF 36)				
36.	9–A19	10.240	HOLDER, F/FLR CNSL CUP (INCLS 35)	97	F	1	12532456
37.	9–A19	10.240	COVER, F/FLR CNSL FRT CUP HLDR TR	97	F	1	10288510
38.	9–A19	10.240	PLATE, F/FLR CNSL TRANS SHFT OPG TR (INCLS 1–4, 7, 8, 16) (REQUIRES NEW C/LTR CONNECTOR 15305919)	97	F (MN6)	1	10297905
	9–A19	10.240	PLATE, F/FLR CNSL TRANS SHFT OPG TR (INCLS 1–4, 7, 8, 16) (REQUIRES NEW C/LTR CONNECTOR 15305919)	97	F (M49)	1	10297906
	9–A19	10.240	PLATE, F/FLR CNSL TRANS SHFT OPG TR (INCLS 1–4, 7, 8, 16) (NEW C/LTR CONNECTOR P/N 15305919 REQ'D FOR MY 97–98)	97	F (LT1, M30, GU2)	1	10297908
	9–A19	10.240	PLATE, F/FLR CNSL TRANS SHFT OPG TR (REQUIRES CIG LIGHTER CONN 15305919) (INCLS 1–4, 7, 8, 16)	97	F (LT1, M30, GU5)	1	10297907
	9–A19	10.240	PLATE, F/FLR CNSL TRANS SHFT OPG TR (REQUIRES CIG LIGHTER CONN 15305919) (INCLS 1–4, 7, 8, 16)	97	F (L36, M30)	1	10297907

cardiagn.com

LT1 – ENGINE–GAS, 8 CYL, 5.7L(5.7P),MFI,HO
L36 – ENGINE GAS, 6 CYL, 3.8K, MFI, V6, HO (ERV6 SERIES)
MM6 – TRANSMISSION MAN 6 SPD, BORG WARNER, 85MM, 1ST 2.66, 6TH 0.50, O/D
MN6 – TRANSMISSION,MANUAL 6–SPEED PROVISIONS(MERCHANDISING OPTION)
M30 – TRANSMISSION,AUTOMATIC 4 SPEED,4L60E,ELECTRONIC
M49 – TRANSMISSION MAN 5 SPD, BORG WARNER, 77MM, 3.75 1ST, .76 5TH, O/D
NW9 – TRACTION CONTROL ELECTRONIC

cardiagn.com

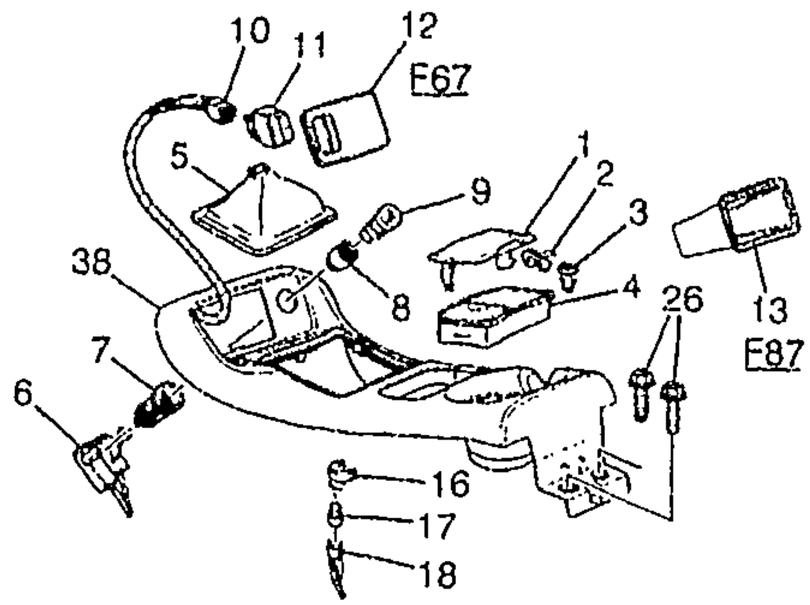

MANUAL

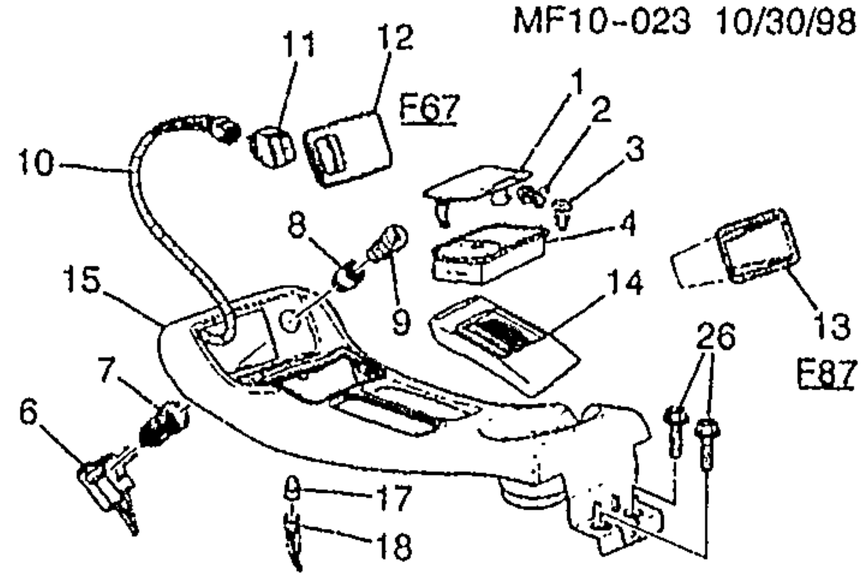

AUTOMATIC

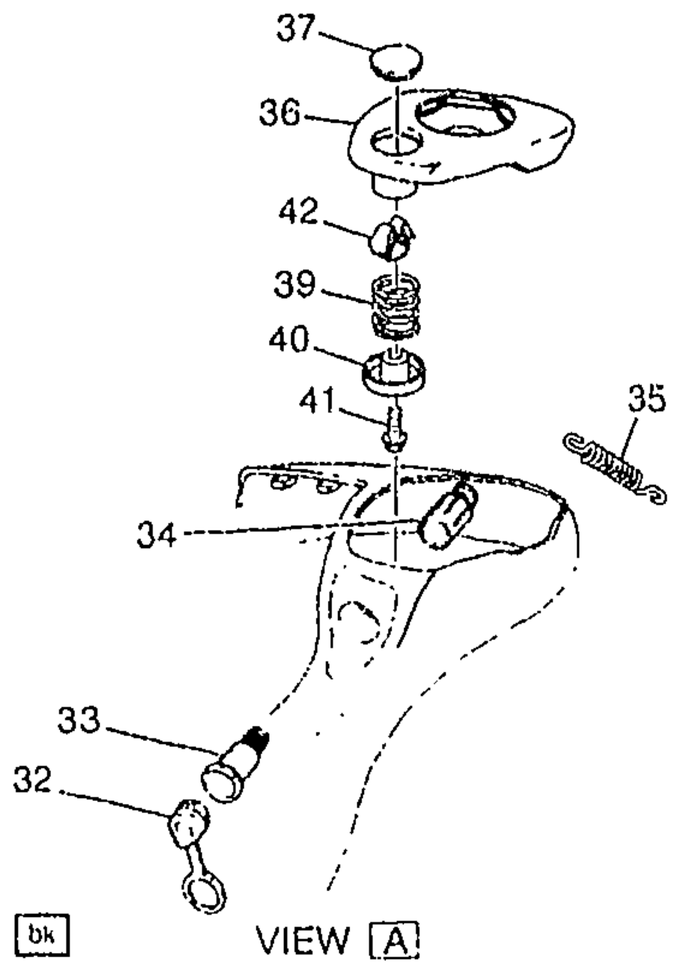

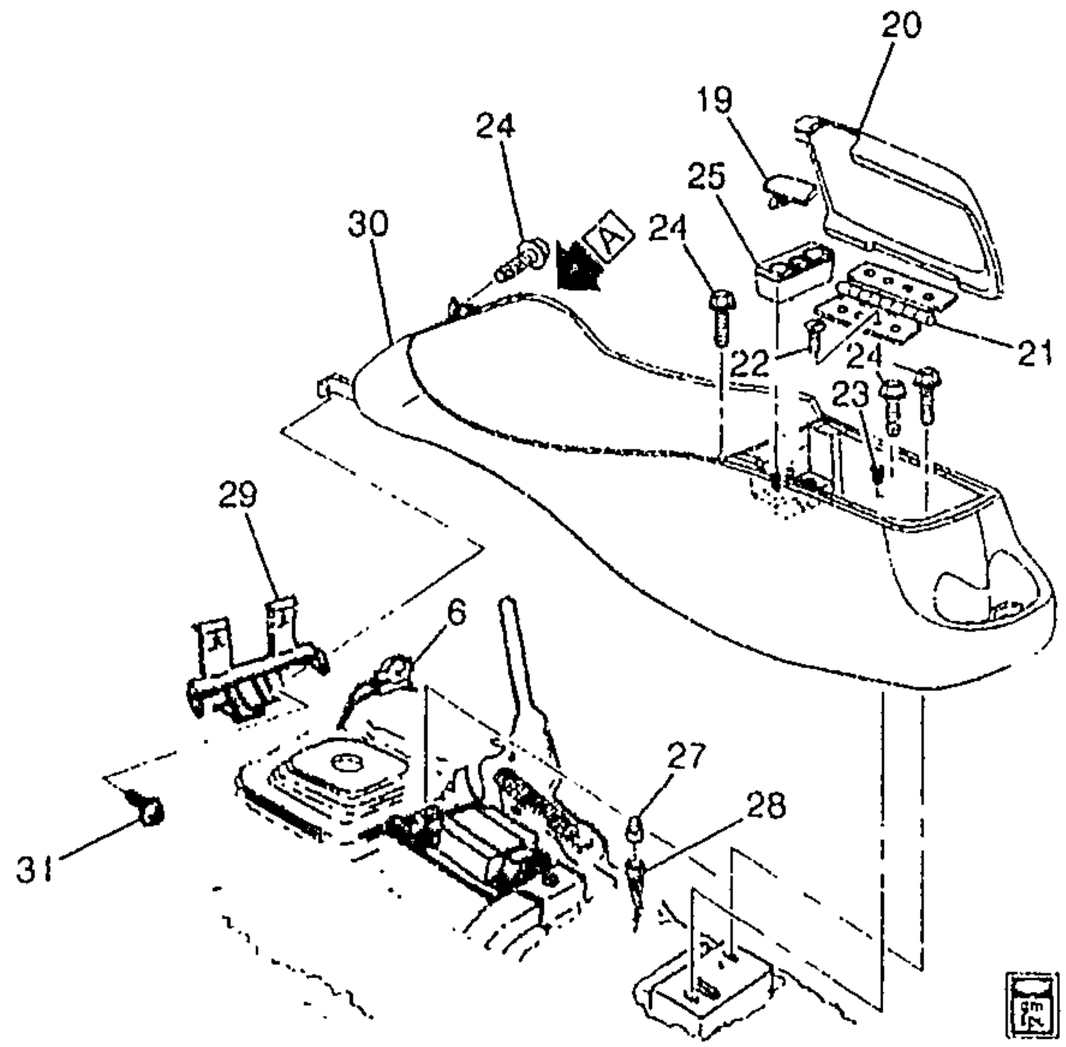

MF10-023

1998-2002 F CONSOLE/FLOOR

1.	9-N16	12.009	COVER, ASHTRAY (PART OF 15, 38)	98-99	F (M49, MM6)	1	10271366
	9-N16	12.009	COVER, ASHTRAY (PART OF 15, 38) (GRAPHITE)	98-02	F (M30)	1	10408634
	9-N16	12.009	COVER, ASHTRAY (PART OF 15, 38) (EBONY)	00-02	F (LS1, L36, M30, GU2, GU5) (EXC TR7)	1	88892218
2.	9-A23	10.242	SPRING, F/FLR CNSL ASHTRAY DR (PART OF 15, 38)	98-02	F	1	10291612
3.	9-A23	10.242	BUMPER, F/FLR CNSL ASHTRAY	98-02	F	2	17997865

cardiagn.com

	9–A23	10.242	**BUMPER**, F/FLR CNSL ASHTRAY DR (PART OF 15, 38) (7.0MM) (12.009)	00–02	F (MM6, M49)	1	17997865
4.	9–A23	10.242	**ASHTRAY**, F/FLR CNSL (PART OF 15, 38) (12.009)	98–99	F	1	10261420
	9–A23	10.242	**ASHTRAY**, F/FLR CNSL (PART OF 15, 38) (12.009)	00–02	F (MM6, M49)	1	10261420
	9–A23	10.242	**ASHTRAY**, F/FLR CNSL. (PART OF 15, 38)	00–02	F (M30)	1	10421435
5.	9–M25 9–M25	4.015	**BOOT**, M/TRNS CONT LVR (GRAY) (ATCH TO CNSL TRIM PLATE)	98–02	F	1	10271369
6.	9–N11	9.709	**CONNECTOR**, C/LTR (2–WAY M/F) (W/LEADS) (USE T/W 11516142 HOUSING C/LTR) (2.535) (AC–DELCO #PT125)	98	F	2	12085504
	9–N11	9.709	**CONNECTOR**, C/LTR (3–WAY F W/LEADS) (AC–DELCO #PT1109)	99–02	F	1	15305919
7.	9–N11	9.709	**HOUSING**, C/LTR (PART OF 15, 38) (MATES W/CONN 12085504, (CASCO) 1–PIN CONN)	98	F	1	11516142
	9–N11	9.709	**HOUSING**, C/LTR (PART OF 15, 38) (RECEPTACLE) (USES RETAINER 12450045)	99–02	F	1	12450043
8.	9–N11	9.709	**RETAINER**, C/LTR HSG (PART OF 15, 38) (CASCO)	98	F	1	11516144
	9–N11	9.709	**RETAINER**, C/LTR HSG (PART OF 15, 38)	98–02	F	1	1999311
	9–N11	9.709	**RETAINER**, C/LTR HSG (PART OF 15, 38) (BLACK) (WITH CAP)	99	F (EXC VJ4)	1	12450047
	9–N11	9.709	**RETAINER**, C/LTR HSG (PART OF 15, 38) (BLACK) (WITH CAP)	00	F (EXC T2J)	1	12450047
	9–N11	9.709	**RETAINER**, C/LTR HSG (PART OF 15, 38) (LIGHTER/APO'S DARK GRAY, FOR 1ST DESIGN SEE 12450047)	01	F (EXC T2J) (2ND DES)	1	1999374
	9–N11	9.709	**RETAINER**, C/LTR HSG (PART OF 15, 38) (BLACK) (WITH CAP) (LIGHTER/APO'S BLACK, FOR 2ND DESIGN SEE 01999374)	01	F (EXC T2J) (1ST DES)	1	12450047
	9–N11	9.709	**RETAINER**, C/LTR HSG (PART OF 15, 38) (BLACK) (WITH CAP)	02	F	1	12450047
9.	9–N11	9.709	**LIGHTER**, CIG (BLACK) (CASCO) (W/LARGE, PLASTIC KNOB)	98–02	F	1	11516140
10.	9–N25	14.483	**CONNECTOR**, SW–F/TOP (BLACK) (8–WAY F W/LEADS, 7–12GA & 4–18GA AS REQ) (2.535) (AC–DELCO #PT1346)	98–02	F67	1	15306189
		N.S.	**CONNECTOR**, SW–ELEK TRACT CONT				
11.	9–N25	14.483	**SWITCH**, CONV TOP (TO BE USED W/CONN 12191825) (BLACK)	98–02	F67	1	10402721
12.	9–A19	10.240	**PLATE**, F/FLR CNSL ACSRY TR	98–99	F67 (EXC TR7)	1	10280510
	9–A19	10.240	**PLATE**, F/FLR CNSL ACSRY TR	00–02	F67 (EXC NW9)	1	10411284

cardiagn.com

	9–A19	10.240	COMPARTMENT, F/FLR CNSL ..	00–02	FP87	1	10411278
14.		N.S.	HOUSING, A/TRNS CONT IND LP (PART OF 15)		.....		
		N.S.	SLIDE, A/TRNS CONT IND (PART OF 15)		.....		
15.	9–A19	10.240	PLATE, F/FLR CNSL TRANS SHFT OPG TR (INCLS 1–4, 7, 8, 14) (NEW C/LTR CONNECTOR P/N 15305919 REQ'D FOR MY 97–98)	98	F (LS1, M30, GU2) (EXC TR7)	1	10297908
	9–A19	10.240	PLATE, F/FLR CNSL TRANS SHFT OPG TR (INCLS 1–4, 7, 8, 14)	99	F (M30) (EXC TR7)	1	10297907
	9–A19	10.240	PLATE, F/FLR CNSL TRANS SHFT OPG TR (INCLS 1–4, 7, 8, 14)	00–02	F (LS1, L36, M30) (EXC TR7)	1	10413134
	9–A19	10.240	PLATE, F/FLR CNSL TRANS SHFT OPG TR (REQUIRES NEW C/LTR CONNECTOR 15305919) (INCLS 1–4, 7, 8, 14)	98	F (LS1, M30, GU5) (EXC TR7)	1	10297907
	9–A19	10.240	PLATE, F/FLR CNSL TRANS SHFT OPG TR (REQUIRES NEW C/LTR CONNECTOR 15305919) (INCLS 1–4, 7, 8, 14)	98	F (L36, M30) (EXC TR7)	1	10297907
16.	9–N16	12.012	HOUSING, ASHTRAY LP (PART OF 38) (PAINT TO MATCH)	98–99	F (MM6, M49)	1	25513268
	9–N16	12.012	HOUSING, ASHTRAY LP (PART OF 38) (MATES W/CONN 12085504, (CASCO) 1–PIN CONN) (9.709)	00–02	F	1	11516142
17.		8.991	TRADE#194, 12V, 2CP (ASHTRAY LP) (AC–DELCO #L194)	98–02	.....	1	9421330
18.	9–N16	12.012	SOCKET, ASHTRAY LP (1–WAY M) (9.709)	98–02	F	1	12125055
19.	9–A25	10.268	LATCH, F/FLR CNSL COMPT DR	98–99	F	1	10273749
	9–A25	10.268	LATCH, F/FLR CNSL COMPT DR	00	F (EXC T2J)	1	10428974
	9–A25	10.268	LATCH, F/FLR CNSL COMPT DR	01–02	F	1	10428974
20.	9–A23	10.242	DOOR, F/FLR CNSL COMPT	98–99	F	1	10273748
	9–A23	10.242	DOOR, F/FLR CNSL COMPT	00–02	F	1	10421355
21.	9–A23	10.242	HINGE, F/FLR CNSL COMPT DR	98–02	F	1	10271241
22.		8.977	SCREW, PAN HD TORX W/FL WA M4.2X1.41X20303 BLK (F/FLR CNSL COMPT DR HGE)	98–02	....	AR	11508561
23.	9–A23	10.242	BUMPER, F/FLR CNSL COMPT DR (7.0MM) (12.009)	98–02	F	1	17997865
	9–A23	10.242	BUMPER, F/FLR CNSL COMPT DR	98	F	2	25695388
	9–A23	10.242	BUMPER, F/FLR CNSL COMPT DR	99–00	F (M30)	2	25695388
24.		8.977	SCREW, HEX TAP M6.3X1.81X20 W/FL WA PH ORG (F/FLR CNSL)	98–02	.....	AR	11504037
25.	9–A19	10.240	HOLDER, F/FLR CNSL COIN (BLACK)	98–02	F	1	10245028
26.	9–A19	10.240	BOLT, F/FLR CNSL TRANS SHFT OPG TR PLT	98–02	F	2	11509374

cardiagn.com

27.	9-A19	10.240	COVER, F/FLR CNSL FRT CUP HLDR TR	98-99	F	1	10288510
	9-A19	10.240	COVER, F/FLR CNSL FRT CUP HLDR TR	00-02	F	1	10421365
28.	9-A19	10.240	HOLDER, F/FLR CNSL CUP (INCL 35, 40)	98-99	F	1	12532456
29.	9-A19	10.240	RETAINER, F/FLR CNSL CUP HLDR (PART OF 30) (ROUND)	98-02	F	1	10281310
	9-A19	10.240	RETAINER, F/FLR CNSL CUP HLDR (PART OF 30) (M4.2X1.41) (PUSH-IN FOR 12MM SQ HOLE) (10.252)	00-02	F	1	17988488
30.	9-A19	10.240	CONSOLE, F/FLR (INCLS 36, 39-42) (COMPLETE)) (COMPLETE) (IT WILL BE NECESSARY TO REPLACE AUX PWR OTLT CONN W/15305985)	98	F	1	10297911
	9-A19	10.240	CONSOLE, F/FLR (INCLS 36, 39-42) (COMPLETE)) (COMPLETE)	99	F (EXC T2J)	1	10297911
	9-A19	10.240	CONSOLE, F/FLR (INCLS 36, 39-42) (EBONY)	00	F (EXC T2J)	1	10411272
	9-A19	10.240	CONSOLE, F/FLR (INCLS 36, 39-42) (EBONY)	01-02	F	1	10411272
	9-A19	10.240	CONSOLE, F/FLR (NEED TO REPLACE AUX POWER OUTLET CONNECTOR W/15305985) (INCLS 36, 39-42) (COMPLETE)) (COMPLETE)	98	F (VJ4) (EXPORT)	1	10421503
31.	9-A19	10.240	SPRING, F/FLR CNSL CUP HLDR (PART OF 30)	98-02	F	1	10281309
32.	9-N11	9.709	PLUG, ACSRY PWR RCPT OPG (NOT USED AFTER 1998)	98	F	1	12450056
33.		8.977	SCREW, PAN HD TORX W/FL WA M4.2X1.41X20303 BLK (PART OF 30)	98-02		AR	11508561
34.	9-A19	10.240	SPRING, F/FLR CNSL CUP HLDR (PART OF 36)	98-02	F	1	10281309
35.	9-N11	9.709	RETAINER, ACSRY PWR RCPT (NOT USED AFTER 1998)	98	F	1	10202971
36.		N.S.	HOLDER, F/FLR CNSL CUP (PART OF 30)	00-02			
37.	9-A19	10.240	RETAINER, F/FLR CNSL CUP HLDR (PART OF 30) (ROUND)	98-02	F	1	10281310
	9-A19	10.240	RETAINER, F/FLR CNSL CUP HLDR (PART OF 30) (M4.2X1.41) (PUSH-IN FOR 12MM SQ HOLE) (10.252)	00-02	F	1	17988488
38.	9-A19	10.240	PLATE, F/FLR CNSL TRANS SHFT OPG TR (INCLS 1-4, 7, 8, 16) (REQUIRES NEW C/LTR CONNECTOR 15305919)	98-99	F (MN6)	1	10297905
	9-A19	10.240	PLATE, F/FLR CNSL TRANS SHFT OPG TR (INCLS 1-4, 7, 8, 16) (REQUIRES NEW C/LTR CONNECTOR 15305919)	98-99	F (M49)	1	10297906

cardiagn.com

9-A19	10.240	PLATE, F/FLR CNSL TRANS SHFT OPG TR (INCLS 1-4, 7, 8, 16)	00-01	F (MN6)	1	10413130
9-A19	10.240	PLATE, F/FLR CNSL TRANS SHFT OPG TR (INCLS 1-4, 7, 8, 16)	00-02	F (MM5, MM6)	1	10413132
39.	N.S.	HOLDER, F/FLR CNSL CUP (PART OF 34-37, 39-42)		.....		
40.	N.S.	RETAINER, F/FLR CNSL CUP HLDR (PART OF 28)		.....		

RPO DEFINITIONS
GU2 -- AXLE,REAR,2.73 RATIO
GU5 - AXLE,REAR,3.23 RATIO
LS1 -- ENGINE GAS, 8 CYL, 5.7L, SFI, ALUMINUM ENGINE
L36 - ENGINE GAS, 6 CYL, 3.8K, MFI, V6, HO (ERV6 SERIES)
MM5 - TRANSMISSION,MANUAL 5-SPEED PROVISIONS(MERCHANDISING OPTION)
MM6 -- TRANSMISSION MAN 6 SPD, BORG WARNER, 85MM, 1ST 2.66, 6TH 0.50, O/D
MN6 - TRANSMISSION,MANUAL 6-SPEED PROVISIONS(MERCHANDISING OPTION)
M30 - TRANSMISSION,AUTOMATIC 4 SPEED,4L60E,ELECTRONIC
M49 - TRANSMISSION MAN 5 SPD, BORG WARNER, 77MM, 3.75 1ST, 76 5TH, O/D
NW9 - TRACTION CONTROL ELECTRONIC
TR7 -- HEADLAMPS CONTROL LEVELING SYSTEM, AUTOMATIC
T2J - ORNAMENTATION,INTERIOR,EXPORT UNIQUE REQUIREMENTS(EXPORT)
VJ4 - LABEL, EXPORT CHILD SEAT LOCATION

cardiagn.com

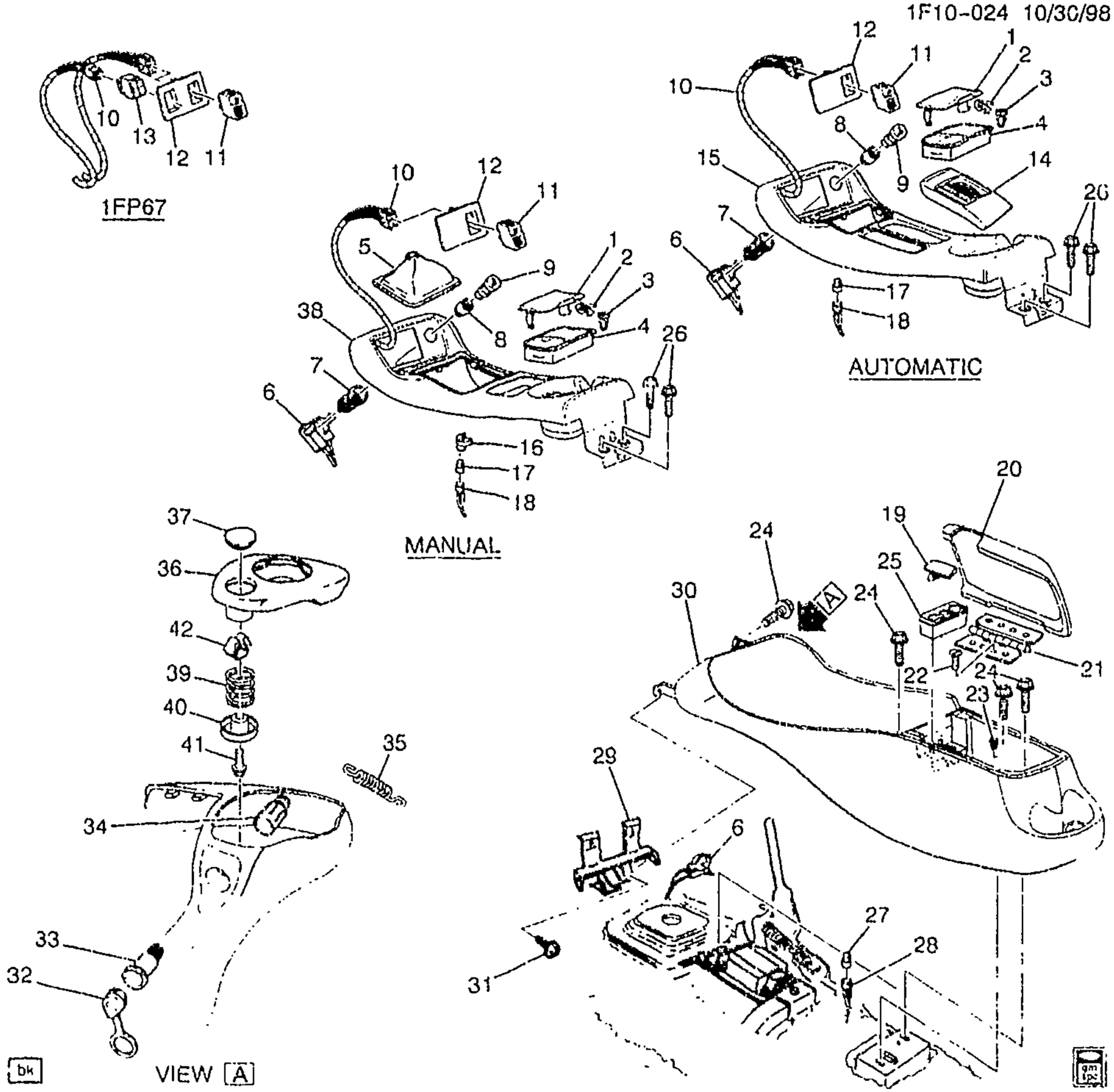

1F10-024

1998-2002 F CONSOLE/FLOOR(T2J,TR7)

1.	9-N16	12.009	COVER, ASHTRAY (PART OF 15, 38)	98-99	F (M49, MM6)	1	10271366
	9-N16	12.009	COVER, ASHTRAY (PART OF 15, 38) (GRAPHITE)	98-99	F (M30)	1	10408634
	9-A23	10.242	COVER, F/FLR CNSL ASHTRAY (PART OF 15, 38) (EBONY)	00-02	F	1	10422531
2.	9-A23	10.242	SPRING, F/FLR CNSL ASHTRAY DR (PART OF 15, 38)	98-02	F	1	10291612
3.	9-A23	10.242	BUMPER, F/FLR CNSL ASHTRAY	98-02	F	2	17997865

cardiagn.com

	9-A23	10.242	**BUMPER**, F/FLR CNSL ASHTRAY DR (PART OF 15, 38) (7.0MM) (12.009)	00-02	F (MM6, M49)	1	17997865
4.	9-A23	10.242	**ASHTRAY**, F/FLR CNSL (PART OF 15, 38) (12.009)	98-99	F	1	10261420
	9-A23	10.242	**ASHTRAY**, F/FLR CNSL (PART OF 15, 38) (12.009)	00-02	F (MM6, M49)	1	10261420
	9-A23	10.242	**ASHTRAY**, F/FLR CNSL (PART OF 15, 38)	00-02	F (M30)	1	10421435
5.	9-M25 9-M25	4.015	**BOOT**, M/TRNS CONT LVR (GRAY) (ATCH TO CNSL TRIM PLATE)	98-02	F	1	10271369
6.	9-N11	9.709	**CONNECTOR**, C/LTR (2-WAY M/F) (W/LEADS) (USE T/W 11516142 HOUSING C/LTR) (2.535) (AC-DELCO #PT125) ...	98	F	2	12085504
	9-N11	9.709	**CONNECTOR**, C/LTR (3-WAY F W/LEADS) (AC-DELCO #PT1109)	99-02	F	1	15305919
7.	9-N11	9.709	**HOUSING**, C/LTR (PART OF 15, 38) (MATES W/CONN 12085504, (CASCO) 1-PIN CONN)	98	F	1	11516142
	9-N11	9.709	**HOUSING**, C/LTR (PART OF 15, 38) (RECEPTACLE) (USES RETAINER 12450045)	99-02	F	1	12450043
8.	9-N11	9.709	**RETAINER**, C/LTR HSG (PART OF 15, 38) (CASCO)	98	F	1	11516144
	9-N11	9.709	**RETAINER**, C/LTR HSG (PART OF 15, 38)	99-02	F	1	1999311
	9-N11	9.709	**RETAINER**, C/LTR HSG (PART OF 15, 38) (BLACK) (WITH CAP) .	99	F (EXC VJ4)	1	12450047
	9-N11	9.709	**RETAINER**, C/LTR HSG (PART OF 15, 38) (BLACK) (WITH CAP) .	02	F	1	12450047
9.	9-N11	9.709	**LIGHTER**, CIG (BLACK) (CASCO) (W/LARGE, PLASTIC KNOB)	98-02	F	1	11516140
10.	9-N25	14.483	**CONNECTOR**, SW-F/TOP (BLACK) (8-WAY F W/LEADS, 7-12GA & 4-18GA AS REQ) (2.535) (AC-DELCO #PT1346) ..	98-02	F67	1	15306189
11.	9-M17	2.737	**SWITCH**, HDLP LVLG ACTR	98-02	F67 (TR7)	1	10402858
	9-M17	2.737	**SWITCH**, HDLP LVLG ACTR	98-02	F87 (TR7)	1	10402857
12.	9-A19	10.240	**PLATE**, F/FLR CNSL ACSRY TR .	00-02	F67 (EXC NW9)	1	10411284
	9-A19	10.240	**PLATE**, F/FLR CNSL ACSRY TR (EBONY)	00-02	F67 (TR7)	1	10411286
	9-A19	10.240	**PLATE**, F/FLR CNSL ACSRY TR (EBONY)	00-02	F87 (TR7)	1	10411289
	9-A19	10.240	**PLATE**, F/FLR CNSL ACSRY TR .	98-99	F67 (TR7) (EXPORT) ...	1	10282752
	9-A19	10.240	**PLATE**, F/FLR CNSL ACSRY TR .	98-99	F87 (TR7) (EXPORT) ...	1	10282753
13.	9-N25	14.483	**SWITCH**, CONV TOP (TO BE USED W/CONN 12191825) (BLACK)	98-02	F67	1	10402721
14.	9-M25	4.020	**HOUSING**, A/TRNS CONT IND LP (PART OF 15)	98-02	F (M30)	1	10406598
		N.S.	**SLIDE**, A/TRNS CONT IND (PART OF 15)		....		
15.	9-A19	10.240	**PLATE**, F/FLR CNSL TRANS SHFT OPG TR (INCLS 1-4, 7, 8,	98	F (LS1, M30, GU2, TR7)	1	10406596

cardiagn.com

	9–A19	10.240	**PLATE**, F/FLR CNSL TRANS SHFT OPG TR (INCLS 1–4, 7, 8, 14)	98	F (LS1, M30, GU5, TR7)	1	10408619
	9–A19	10.240	**PLATE**, F/FLR CNSL TRANS SHFT OPG TR (INCLS 1–4, 7, 8, 14)	98	F (L36, M30, TR7)	1	10408619
	9–A19	10.240	**PLATE**, F/FLR CNSL TRANS SHFT OPG TR (INCLS 1–4, 7, 8, 14)	99	F (M30, TR7) (EXPORT)	1	10403663
	9–A19	10.240	**PLATE**, F/FLR CNSL TRANS SHFT OPG TR (INCLS 1–4, 7, 8, 14)	00–02	F (LS1, L36, M30, TR7) (EXPORT)	1	10413142
16.	9–N16	12.012	**HOUSING**, ASHTRAY LP (PART OF 38) (PAINT TO MATCH)	98–99	F (MM6, M49)	1	25513268
	9–N16	12.012	**HOUSING**, ASHTRAY LP (PART OF 38) (MATES W/CONN 12085504, (CASCO) 1–PIN CONN) (9.709)	00–02	F	1	11516142
17.		8.991	**TRADE#194**, 12V, 2CP (ASHTRAY LP) (AC–DELCO #L194)	98–02		1	9421330
18.	9–N16	12.012	**SOCKET**, ASHTRAY LP (1–WAY M) (9.709)	98–02	F	1	12125055
19.	9–A25	10.268	**LATCH**, F/FLR CNSL COMPT DR (PART OF 20, 30)	98–99	F	1	10273749
	9–A25	10.268	**LATCH**, F/FLR CNSL COMPT DR (PART OF 20, 30)	00	F (T2J, VJ4)	1	10428974
	9–A25	10.268	**LATCH**, F/FLR CNSL COMPT DR (PART OF 20, 30)	01–02	F	1	10428974
20.	9–A23	10.242	**DOOR**, F/FLR CNSL COMPT (INCLS 19, 21, 22) (PART OF 30)	98–99	F	1	10273748
	9–A23	10.242	**DOOR**, F/FLR CNSL COMPT (INCLS 19, 21, 22) (PART OF 30)	00–02	F	1	10421355
21.	9–A23	10.242	**HINGE**, F/FLR CNSL COMPT DR (PART OF 20, 30)	98–02	F	1	10271241
22.		8.977	**SCREW**, PAN HD TORX W/FL WA M4.2X1.41X20303 BLK (PART OF 20, 30)	98–02		AR	11508561
	9–A23	10.242	**NUT**, F/FLR CNSL DR HGE (PART OF 20, 30) (M4 2X1.41) (PUSH–IN FOR 12MM SQ HOLE) (10.252)	98–02	F	6	17988488
23.	9–A23	10.242	**BUMPER**, F/FLR CNSL COMPT DR (PART OF 30) (7.0MM) (12.009)	98–02	F	1	17997805
	9–A23	10.242	**BUMPER**, F/FLR CNSL COMPT DR (PART OF 30)	98	F	2	25695388
	9–A23	10.242	**BUMPER**, F/FLR CNSL COMPT DR (PART OF 30)	99–00	F (M30)	2	25695388
24.		8.977	**SCREW**, HEX TAP M6.3X1.81X20 W/FL WA PH ORG (F/FLR CNSL)	98–02		AR	11504037
25.	9–A19	10.240	**HOLDER**, F/FLR CNSL COIN (BLACK)	98–02	F	1	10245028
26.		8.977	**BOLT**, SCR HEX W/FLAT WA 12 DIA TYPE AB (F/FLR CNSL TRANS SHFT OPG TR PLT)	98–02		2	11509374

cardiagn.com

27.		8.991	**BULB**, WEDGE .08 AMPS 19/32 LG 0.3 POWER (A/TRNS CONT POSN IND) (AC–DELCO #9436790)	98–02	F	1	9436790
28.	9–M26	4.022	**SOCKET**, A/TRNS DIAL IND LP (W/LEADS) (AC–DELCO #LS28)	98–02	F	1	12125966
29.	9–A18	10.230	**BRACKET**, I/P LWR TIE BAR (CTR LWR)	98–02	F	1	10269101
30.		N.S.	**CONSOLE**, F/FLR				
	9–A19	10.240	**CONSOLE**, F/FLR (INCLS 19, 20, 21, 23, 33, 34, 36, 37, 39–42) (COMPLETE)	98	F (VJ4)	1	10421503
	9–A19	10.240	**CONSOLE**, F/FLR (INCLS 19, 20, 21, 23, 33, 34, 36, 37, 39–42) (COMPLETE)	99–02	F (T2J, VJ4)	1	10297911
31.		8.977	**SCREW**, HEX W/FLAT WA (I/P)	98–02	F	2	12337828
32.	9–N11	9.709	**PLUG**, ACSRY PWR RCPT OPG (NOT USED AFTER 1998)	98	F	1	12450056
33.	9–N11	9.709	**RECEPTACLE**, ACSRY PWR (PART OF 30)	98	F	1	10202970
	9–N11	9.709	**RECEPTACLE**, ACSRY PWR (PART OF 30) (CAVITY A IS B+, CAVITY C IS GND, CAVITY B IS FOR LIGHTED RING)	99–02	F	1	12450044
34.	9–N11	9.709	**RETAINER**, ACSRY PWR RCPT (NOT USED AFTER 1998) (PART OF 30)	98	F	1	10202971
35.	9–A19	10.240	**SPRING**, F/FLR CNSL CUP HLDR (PART OF 36)	98–02	F	1	10281309
36.	9–A19	10.240	**HOLDER**, F/FLR CNSL CUP (INCLS 35)	98	F	1	12532456
		N.S.	**HOLDER**, F/FLR CNSL CUP (PART OF 30)	99–02			
37.	9–A19	10.240	**COVER**, F/FLR CNSL FRT CUP HLDR TR (PART OF 30)	98–99	F	1	10288510
	9–A19	10.240	**COVER**, F/FLR CNSL FRT CUP HLDR TR (PART OF 30)	00–02	F	1	10421365
	9–A19	10.240	**COVER**, F/FLR CNSL FRT CUP HLDR TR (PART OF 30)	00–02	F (T2J, VJ4) (EXPORT)	1	10421365
38.	9–A19	10.240	**PLATE**, F/FLR CNSL TRANS SHFT OPG TR (INCLS 1–4, 7, 8, 16) (REQUIRES NEW C/LTR CONNECTOR 15305919)	98–99	F (M49)	1	10297906
	9–A19	10.240	**PLATE**, F/FLR CNSL TRANS SHFT OPG TR (INCLS 1–4, 7, 8, 16)	98–99	F (MN6)	1	10297905
	9–A19	10.240	**PLATE**, F/FLR CNSL TRANS SHFT OPG TR (INCLS 1–4, 7, 8, 16)	00–01	F (MN6)	1	10413130
	9–A19	10.240	**PLATE**, F/FLR CNSL TRANS SHFT OPG TR (INCLS 1–4, 7, 8, 16)	00–02	F (MM5, MM6)	1	10413132
39.	9–A19	10.240	**SPRING**, F/FLR CNSL CUP HLDR (PART OF 30)	98–02	F	1	10281309
40.	9–A19	10.240	**RETAINER**, F/FLR CNSL CUP HLDR (PART OF 30) (ROUND)	98–02	F	1	10281310

cardiagn.com

	9–A19	10.240	RETAINER, F/FLR CNSL CUP HLDR (PART OF 30) (M4.2X1.41) (PUSH–IN FOR 12MM SQ HOLE) (10.252)	00–02	F	1	17988488
	9–A19	10.240	RETAINER, F/FLR CNSL CUP HLDR (PART OF 30) (M4.2X1.41) (PUSH--IN FOR 12MM SQ HOLE) (10.252)	98–02	F	1	17988488
41.		8.977	SCREW, PAN HD TORX W/FL WA M4.2X1.41X20303 BLK (PART OF 30)	98–02	.....	AR	11508561
42.	9–A19	10.240	RETAINER, F/FLR CNSL CUP HLDR (PART OF 30) (ROUND) ...	98–02	F	1	10281310
	9–A19	10.240	RETAINER, F/FLR CNSL CUP HLDR (PART OF 30) (M4.2X1.41) (PUSH–IN FOR 12MM SQ HOLE) (10.252)	00–02	F	1	17988488

RPO DEFINITIONS
GU2 -- AXLE,REAR,2.73 RATIO
GU5 – AXLE,REAR,3.23 RATIO
LS1 – ENGINE GAS, 8 CYL, 5.7L, SFI, ALUMINUM ENGINE
L36 – ENGINE GAS, 6 CYL, 3.8K, MFI, V6, HO (ERV6 SERIES)
MM5 – TRANSMISSION,MANUAL 5–SPEED PROVISIONS(MERCHANDISING OPTION)
MM6 – TRANSMISSION MAN 6 SPD, BORG WARNER, 85MM, 1ST 2.66, 6TH 0.50, O/D
MN6 – TRANSMISSION,MANUAL 6–SPEED PROVISIONS(MERCHANDISING OPTION)
M30 – TRANSMISSION,AUTOMATIC 4 SPEED,4L60E,ELECTRONIC
M49 -- TRANSMISSION MAN 5 SPD, BORG WARNER, 77MM, 3.75 1ST, .76 5TH, O/D
NW9 – TRACTION CONTROL ELECTRONIC
TR7 – HEADLAMPS CONTROL LEVELING SYSTEM, AUTOMATIC
T2J – ORNAMENTATION,INTERIOR,EXPORT UNIQUE REQUIREMENTS(EXPORT)
VJ4 – LABEL, EXPORT CHILD SEAT LOCATION

cardiagn.com

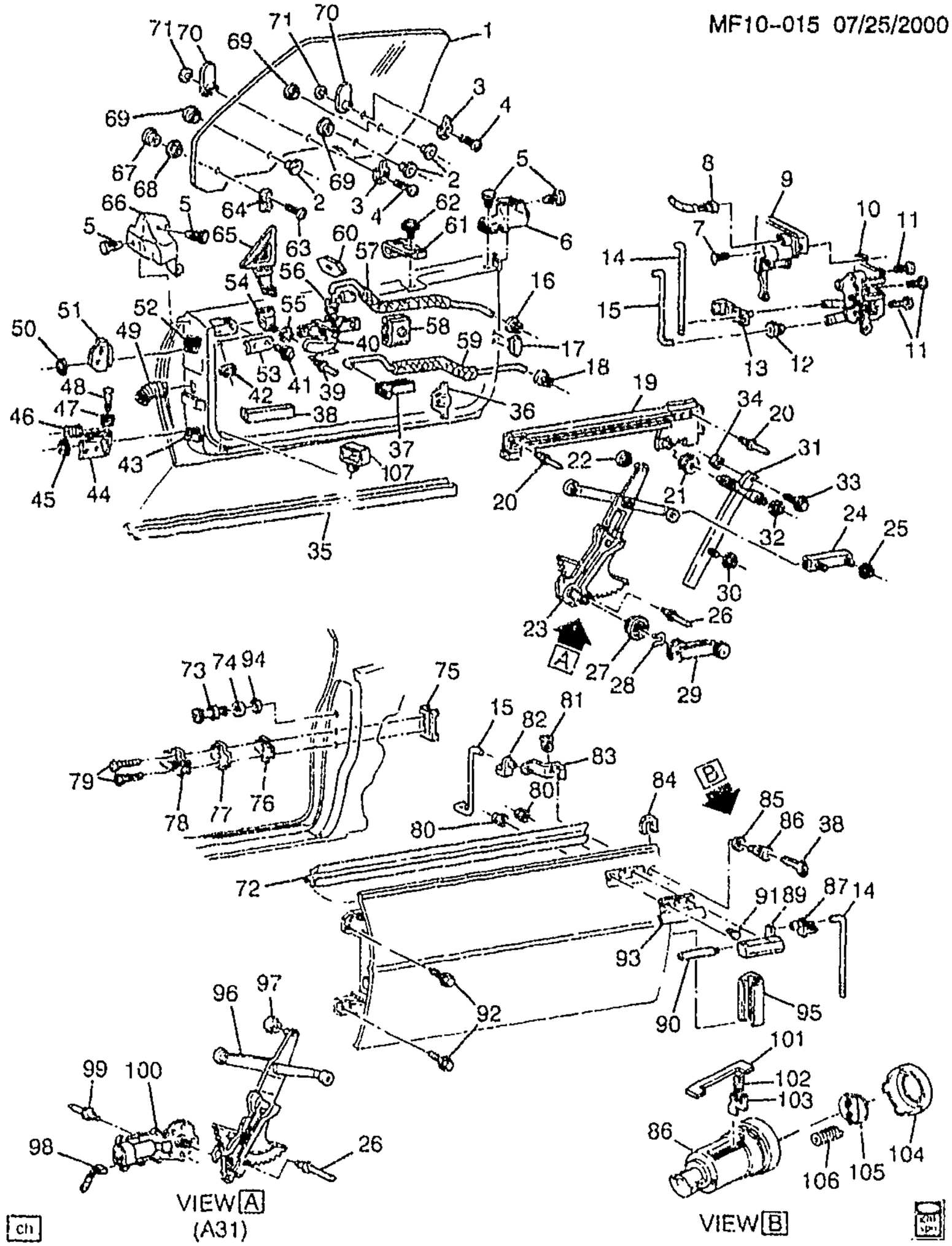

MF10-015

1993-2002 F DOOR HARDWARE/FRONT

1.	9-B7	10.681	WINDOW, FRT S/D	93-97	F	LH	10426522
	9-B7	10.681	WINDOW, FRT S/D	98-02	F (EXC A26)	LH	10426522
	9-B7	10.681	WINDOW, FRT S/D	99-02	F (A26) (EXPORT)	LH	10426524
2.	9-B7	10.685	RETAINER, FRT S/D WDO BUSH	93-02	F	6	20096585
3.	9-B10	10.728	PIN, FRT S/D WDO STAB	93-02	F	4	10165402

cardiagn.com

			(7.0/1.0 NM) (10.570)				
5.	9–A26	10.355	RETAINER, FRT S/D FRT BELT SEAL (PUSH IN) (RETAINER POSITION CHANGED END OF 1994 AS PICTURED) (FULL FLDG) (10.695)	93–02	F	4	8731909
	9–A26	10.355	SEAL, FRT S/D RR BELT	93–02	F	RH	10260335
	9–A26	10.355	SEAL, FRT S/D RR BELT	93–02	F	LH	10260336
6.	9–A26	10.355	SEAL, FRT S/D RR BELT	93–02	F	RH	10260335
	9–A26	10.355	SEAL, FRT S/D RR BELT	93–02	F	LH	10260336
7.	9–A27	10.474	BOLT, FRT S/D LAT (FRM TO HSG) (PART OF 10) (M2.3X1.34X9) (TORX HD)	93–98	F	3	16606574
		N.S.	BOLT, FRT S/D LAT (FRM TO HSG) (PART OF 10)	99–02	.....		
8.	9–A28	10.485	CONNECTOR, MOT–DR LK ACTR (2–WAY F) (W/LEADS) (W/SEAL) (2.535) (AC–DELCO #PT247)	93–02	F (AU3)	1	12101855
9.	9–A28	10.485	ACTUATOR KIT, FRT S/D LK (W/CLIPS & INST SHEET) (W/O ANTI–THEFT SWITCH) (W/DM LP SW) (AC–DELCO #25664287)	93–02	F (AU3)	RH	25664287
	9–A28	10.485	ACTUATOR KIT, FRT S/D LK (W/CLIPS & INST SHEET) (W/O ANTI–THEFT SWITCH) (W/DM LP SW) (AC–DELCO #25664288)	97–02	F (AU3)	LH	25664288
10.	9–A27	10.470	LOCK, FRT S/D (INCLS 7, 12, 13, 16, 18)	93–97	F (EXC AU3)	RH	16629242
	9–A27	10.470	LOCK, FRT S/D (INCLS 7, 12, 13, 16, 18)	93–97	F (EXC AU3)	LH	16629243
	9–A27	10.470	LOCK, FRT S/D (INCLS 7, 12, 13, 16, 18)	98	F (EXC AU3)	RH	16638342
	9–A27	10.470	LOCK, FRT S/D (INCLS 7, 12, 13, 16, 18)	98	F (EXC AU3)	LH	16638343
	9–A27	10.470	LOCK, FRT S/D (LESS ACTR) (INCLS 7, 12, 13, 16, 18)	98	F	RH	16629726
	9–A27	10.470	LOCK, FRT S/D (LESS ACTR) (INCLS 7, 12, 13. 16, 18) (10.473)	98	F	LH	16629727
	9–A27	10.470	LOCK, FRT S/D (LESS ACTR) (INCLS 7, 12, 13, 16, 18)	93–97	F (AU3)	RH	16629726
	9–A27	10.470	LOCK, FRT S/D (LESS ACTR) (INCLS . , 12. 13. 16. 18) (10.473)	93–97	F (AU3)	LH	16629727
	9–A27	10.470	LOCK, FRT S/D (LESS ACTR) (INCLS 7, 12, 13, 16, 18)	98–02	F	RH	16629726
	9–A27	10.470	LOCK, FRT S/D (LESS ACTR) (INCLS 7, 12, 13, 16, 18) (10.473)	98–02	F	LH	16629727
11.	9–A27	10.474	BOLT, FRT S/D LK (M6X1X20) ...	93–02	F	6	10234943
12.	9–B5	10.563	CLIP, F/D LK CYL ROD (PART OF 10) (YELLOW) (10.527)	93–98	F	2	16633853
		N.S.	CLIP, F/D LK CYL ROD (PART OF 10)	99–02	.....		
13.	9–B5	10.565	CLIP, FRT S/D O/S HDL ROD (PART OF 10) (YELLOW) (10.527)	93–99	F	1	16633853

cardiagn.com

	9–B5	10.565	CLIP, FRT S/D O/S HDL ROD (PART OF 10) (BLACK) (16.353)	93–02	F	2	16675980
	9–B5	10.565	CLIP, FRT S/D O/S HDL ROD (PART OF 10) (YELLOW) (10.527) (USED W/ROD WITH (1) 90 DEGREE BENDS) (2ND DES SEE 16640343)	00	F (1ST DES)	1	16633853
	9–B5	10.565	CLIP, FRT S/D O/S HDL ROD (PART OF 10) (YELLOW) (10.527) (USED W/ROD WITH (2) 90 DEGREE BENDS) (1ST DES SEE 16633853)	00	F (2ND DES)	1	16640343
	9–B5	10.565	CLIP, FRT S/D O/S HDL ROD (PART OF 10) (YELLOW) (10.527)	01–02	F	1	16633853
14.	9–B5	10.563	ROD, FRT S/D O/S HDL	93–02	F	2	16625879
15.	9–B5	10.563	ROD, FRT S/D LK CYL	93–02	F	RH	16625884
	9–B5	10.563	ROD, FRT S/D LK CYL	93–02	F	LH	16625885
16.	9–B3	10.515	CLIP, FRT S/D I/S HDL ROD (PART OF 10) (YELLOW) (10.527)	93–02	F	2	16633853
17.	9–B6	10.587	BUMPER, FRT S/D	93–97	F	RH	20376242
	9–B6	10.587	BUMPER, FRT S/D	93–02	F	AR	20376243
18.	9–B5	10.565	CLIP, FRT S/D LKG ROD (PART OF 10) (YELLOW) (10.527)	93–02	F	2	16633853
19.	9–B7	10.685	CHANNEL, FRT S/D WDO REG C/BAL ARM (INCLS 24) (10.687)	93–02	F	LH	16625875
	9–B7	10.685	CHANNEL, FRT S/D WDO REG C/BAL ARM (10.687)	93–02	F	RH	16625874
20.	9–B8	10.705	RIVET, FRT S/D WDO (8.967)	93–02	F	6	12338153
21.		N.S.	ROLLER, FRT S/D WDO (PART OF 19)				
22.		N.S.	ROLLER, FRT S/D WDO REG ARM (PART OF 23)				
23.	9–B11	10.783	REGULATOR, FRT S/D WDO (INCLS 21)	93–02	F (EXC A31)	LH	16625871
	9–B11	10.783	REGULATOR, FRT S/D WDO (INCLS 21)	93–02	F (EXC A31)	RH	16625870
24.	9–B7	10.685	CHANNEL, FRT S/D WDO REG C/BAL ARM (INCLS 21) (6" LONG (153MM)	93–02	F	2	16628898
25.		8.917	NUT, HEX W/CON WA M6X1X5.5, 24–OD 9 PEOR (FRT S/D WDO REG C/BAL ARM CHAN) (8.915)	93–02		4	11508388
26.	9–B11	10.783	RIVET, FRT S/D WDO REG (DOME)	93–02	F	8	10157547
27.	9–B12	10.806	SPACER, FRT S/D WDO REG HDL	93–02	F (EXC A31)	2	10193360
28.	9–B12	10.806	CLIP, FRT S/D WDO REG HDL (PART OF 29) (10.512)	93–02	F (EXC A31)	1	4168122
29.	9–B12	10.797	HANDLE, FRT S/D WDO REG (INCLS 28) (BLACK)	93–96	F (EXC A31)	2	16600094
	9–B12	10.797	HANDLE, FRT S/D WDO REG (INCLS 28)	98–02	F (EXC A31)	2	22656167
	9- B12	10.797	HANDLE, FRT S/D WDO REG (HIGH GLOSS SURF APPEARANCE) (INCLS 28) (BLACK)	97	F (EXC A31) (1ST DES)	2	16600094

cardiagn.com

	9–B12	10.797	HANDLE, FRT S/D WDO REG (LOW GLOSS SURF APPEARANCE) (INCLS 28)	97	F (EXC A31) (2ND DES)	2	22656167
30.		8.917	NUT, HEX W/CON WA M6X1X5.5, 24–OD 9 PEOR (FRT S/D WDO RR GDE CHAN) (8.915)	93–02		2	11508388
31.	9–B8	10.701	CHANNEL, FRT S/D WDO RR (INCLS 33, 34)	93–02	F	2	16629042
32.		8.915	NUT, HEX W/CON WA M8X1.25X9.5 19–OD 9 ZP (FRT S/D WDO RR GDE CHAN) (8.917)	93–02		4	11506117
33.		8.977	SCREW–HEX W/CON TH WA 17.0 DIA (FRT S/D WDO RR CHAN EXT) (PART OF 31)	93–02		2	11503938
34.		N.S.	STOP, FRT S/D WDO UP (PART OF 31)				
35.	9–B7	10.694	SEALING STRIP, FRT S/D BTM AUX	93–02	F	2	10247013
36.	9–B9	10.716	BUMPER, FRT S/D WDO RR	93–02	F	2	10249168
37.	9–B5	10.559	KNOB, FRT S/D LKG ROD	93–02	F	2	10132223
38.		N.S.	BUMPER, FRT S/D WDO FRT				
39.		8.967	RIVET–3/16X.430, STYLE 1C (FRT S/D I/S HDL)	93–02		2	9440392
40.	9–B2	10.512	HANDLE, FRT S/D I/S	93–02	F	RH	16628402
	9–B2	10.512	HANDLE, FRT S/D I/S	93–02	F	LH	16628403
41.		8.900	BOLT, HFH (M6X1X20, 13 THD, 13.6 OD, 9.8 PO) (O/S RR VIEW MIR APLQ) (AC–DELCO #11517518)	93–02		4	11517518
42.		8.917	NUT, HEX W/CON WA 6X1X5.5 16–OD ZP 9 (O/S RR VIEW MIR OPG APLQ)	93–02		2	11517293
43.	9–A27	10.454	PLATE, FRT S/D LWR HGE ANC (DR SI)	93–02	F	RH	10215358
	9–A27	10.454	PLATE, FRT S/D LWR HGE ANC (DR SI)	93–02	F	LH	10215359
44.	9–A27	10.454	HINGE, FRT S/D LWR (INCLS 46, 47, 48) (W/O SPRING)	93–02	F	RH	16628998
	9–A27	10.454	HINGE, FRT S/D LWR (INCLS 46, 47, 48) (W/O SPRING)	93–02	F	LH	16631043
45.	9–A27	10.454	NUT, FRT S/D LWR HGE (DR SI) (4.647)	93–02	F	4	25523369
46.	9–A27	10.455	SPRING, FRT S/D LWR HGE (PART OF 44)	93–02	F	2	20300149
47.	9–A27	10.455	ROLLER, FRT S/D CHK LINK (PART OF 44) (W/BUSH, LUB & ROLLER) (MAY REQUIRE LUBE P/N 1050109 TO EASE INSTALLATION)	93–02	F	2	20056035
48.	9–A27	10.455	PIN, FRT S/D CHK LINK (PART OF 44)	93–02	F	2	20262500
49.		N.S.	GROMMET, FRT S/D DR WRG HARN (PART OF HARNESS, CROSSBODY & FRT S/D WRG)				
50.	9–A27	10.463	NUT, FRT S/D UPR DR SI HGE (4.647)	93–02	F	6	25523369
51.	9–A26	10.450	HINGE, FRT S/D UPR	93–94	F	LH	16626519

cardiagn.com

	9–A26	10.450	HINGE, FRT S/D UPR (MUST ALSO USE #10268960 PLATE) ..	93–02	F	RH	16630874
	9–A26	10.450	HINGE, FRT S/D UPR	93–02	F	LH	16630875
52.	9–A26	10.450	PLATE, FRT S/D UPR DR SI HGE ANC (MUST ALSO USE #16630874 HINGE)	93–02	F	RH	10268960
	9–A26	10.450	PLATE, FRT S/D UPR DR SI HGE ANC	93–02	F	LH	10268961
53.	9–A11	10.185	WASHER, O/S RR VIEW MIR APLQ	93–02	F	2	10165429
54.	9–B9	10.716	GUIDE, FRT S/D WDO UPR	93–02	F	RH	10198210
	9–B9	10.716	GUIDE, FRT S/D WDO UPR	93–02	F	LH	10198211
55.		8.917	NUT, HEX W/CON WA M6X1X5.5, 24–OD 9 PEOR (FRT S/D WDO FRT UP STOP SUPT) (8.915)	93–02	.....	4	11508388
56.	9–B3	10.515	CLIP, FRT S/D I/S HDL ROD (RED) (SNAP–ON) (10.565)	93–02	F	RH	16607593
	9–B3	10.515	CLIP, FRT S/D I/S HDL ROD (RED) (NYLON) (10.527)	93–02	F	LH	16627328
57.	9–B5	10.563	ROD, FRT S/D I/S HDL	93–02	F	RH	16625880
	9–B5	10.563	ROD, FRT S/D I/S HDL	93–02	F	LH	16625881
58.	9–B5	10.565	CLIP, FRT S/D LKG ROD (FOAM)	93–02	F	2	10132220
	9–B5	10.565	CLIP, FRT S/D LKG ROD (YELLOW) (10.527)	93–99	F	AR	16633853
	9–B5	10.565	CLIP, FRT S/D LKG ROD (YELLOW) (10.527) (USED W/ROD WITH (1) 90 DEGREE BENDS) (2ND DES SEE 16640343)	00	F (1ST DES)	AR	16633853
	9–B5	10.565	CLIP, FRT S/D LKG ROD (YELLOW) (10.527) (USED W/ROD WITH (2) 90 DEGREE BENDS) (1ST DES SEE 16633853)	00	F (2ND DES)	AR	16640343
	9–B5	10.565	CLIP, FRT S/D LKG ROD (YELLOW) (10.527)	01–02	F	AR	16633853
59.	9–B5	10.563	ROD, FRT S/D LKG	93–02	F	RH	16628744
	9–B5	10.563	ROD, FRT S/D LKG	93–02	F	LH	16628745
60.	9–B3	10.515	SEAL, FRT S/D I/S HDL	93–02	F	2	10247122
61.	9–B7	10.685	STABILIZER, FRT S/D WDO	93–02	F	4	10257988
62.		8.977	SCREW, HEX W/TT CON WA TYPE C M6X1X20 HRD PT PZOR (FRT S/D WDO STAB)	93–02	.....	4	11508023
63.	9–B9	10.716	BOLT, FRT S/D · DO FRT UP STOP (7.0/1.0 Nm) (10.570)	93–02	F	1	14089531
64.	9–B9	10.716	STOP, FRT S/D WDO FRT UP ...	93–02	F	2	10165403
65.	9–A11	10.185	APPLIQUE, O/S RR VIEW MIR ...	93–02	F	RH	10294284
	9–A11	10.185	APPLIQUE, O/S RR VIEW MIR ...	93–02	F	LH	10294285
66.	9–A26	10.355	SEAL, FRT S/D FRT BELT (RETAINER POSITION CHANGED END OF 1994 AS PICTURED)	93–02	F	RH	10270466
	9–A26	10.355	SEAL, FRT S/D FRT BELT (RETAINER POSITION CHANGED END OF 1994 AS PICTURED) . ..	93–02	F	LH	10270467
67.	9–B9	10.716	NUT, FRT S/D WDO FRT UP STOP (8.0/2.0 MM) (10.728)	93–02	F	2	20213450

cardiagn.com

68.	9-B9	10.716	WASHER, FRT S/D WDO FRT UP STOP (NYLON) (10.685)	93-02	F	2	1705300
69.	9-B7	10.685	BUSHING, FRT S/D WDO (STEEL TYPE)	93-02	F	6	20178799
70.	9-B9	10.716	WEDGE, FRT S/D WDO	93-02	F	4	10198247
71.	9-B7	10.685	NUT, FRT S/D WDO STAB PIN (8.0/2.0 MM) (10.728)	93-97	F	2	20213450
	9-B7	10.685	NUT, FRT S/D WDO STAB PIN (8.0/2.0 MM) (10.728)	98-02	F (EXC A26)	2	20213450
72.	9-B9	10.710	SEALING STRIP, FRT S/D WDO OTR (CLIP PART OF ASM)	93-02	F	RH	10284222
	9-B9	10.710	SEALING STRIP, FRT S/D WDO OTR	93-02	F	LH	10284223
73.	9-N28	14.875	STRIKER, FRT S/D INTLK (AUXILLARY)	93-02	F	2	10213277
74.	9-N28	14.875	SPACER, FRT S/D INTLK STKR	93-02	F	AR	10215009
75.	9-B6	10.571	PLATE, FRT S/D LK STKR ANC	93-02	F	2	10198280
76.	9-B6	10.571	WASHER, FRT S/D LK STKR	93	F	2	22597807
	9-B6	10.571	WASHER, FRT S/D LK STKR	94-02	F	2	10172521
77.	9-B6	10.571	SPACER, FRT S/D LK STKR (1 MM THK) (REPLS SPACER 2 MM THK) (16.335)	93-02	F	AR	15012626
	9-B6	10.571	SPACER, FRT S/D LK STKR	97-02	F	AR	16634372
78.	9-B6	10.569	STRIKER, FRT S/D LK (BLACK) (INCLS PLATE, REINFORCEMENT & STRIKER)	93-02	F	2	21090040
79.	9-B6	10.570	BOLT, FRT S/D LK STKR (M8X1.25X35) (8.908)	93-02	F	4	9442471
80.		8.921	NUT, STAMPED FITS 6.3 STUD-TYPE B SELF THD STL PC (FRT S/D O/S HDL)	93-02		4	11502553
81.	9-B5	10.553	RETAINER, FRT S/D LK CYL TUMB SPR (BAR TYPE)	93-99	F	AR	601261
	9-B5	10.553	RETAINER, FRT S/D LK CYL TUMB SPR (SPR CLIP) (10 550)	93-02	F	5	16600277
82.	9-B4	10.551	RING, FRT S/D LK PAWL RET (BLACK) (MOLDED PLASTIC) (10.474)	93-02	F	RH	20633148
	9-B4	10.551	RING, FRT S/D LK PAWL RET (NATURAL) (MOLDED PLASTIC) (10.474)	93-02	F	LH	20633149
83.	9-B4	10.551	PAWL, FRT S/D LK	93-02	F	RH	16628908
	9-B4	10.551	PAWL, FRT S/D LK	93-02	F	LH	16628909
84.	9-B4	10.551	RETAINER, FRT S/D LK CYL	93-02	F	2	20650005
	9-B4	10.551	RETAINER, FRT S/D LK CYL	01-02	F	2	11518506
85.	9-B4	10.550	GASKET, FRT S/D LK CYL (NOT USED ON 1995 VEHICLES AND SOME 1994 VEHICLES)	93-94	F	2	10224336
86.	9-B4	10.550	CYLINDER KIT, FRT S/D LK (UNCODED) (INCLS 104, 105, 106)	93-02	F	2	12518881
87.	9-B3	10.527	CLIP, FRT S/D O/S HDL (PART OF 89) (RED) (NYLON)	93-00	F	LH	16627328
	9-B3	10.527	CLIP, FRT S/D O/S HDL (PART OF 89) (RED) (SNAP-ON) (10.565)	93-02	F	RH	16607593

cardiagn.com

	9-B3	10.527	CLIP, FRT S/D O/S HDL (PART OF 89) (YELLOW)	98-99	F	2	16633853
	9-B3	10.527	CLIP, FRT S/D O/S HDL (PART OF 89) (YELLOW) (USED W/ROD WITH (1) 90 DEGREE BENDS) (2ND DES SEE 16640343)	00	F (1ST DES)	2	16633853
	9-B3	10.527	CLIP, FRT S/D O/S HDL (PART OF 89) (YELLOW) (USED W/ROD WITH (2) 90 DEGREE BENDS) (1ST DES SEE 16633853)	00	F (2ND DES)	2	16640343
	9-B3	10.527	CLIP, FRT S/D O/S HDL (PART OF 89) (YELLOW)	01-02	F	2	16633853
88.	9-M6	2.187	KEY, DR LK (OVAL HD, GRV H, B&S 320405A, CAN USE 20364745 BOOT)	93-02	F	2	1154607
89.	9-B3	10.527	HANDLE, FRT S/D O/S (INCLS 87, 90, 91) (WHITE)	93	F (B5A)	RH	10280020
	9-B3	10.527	HANDLE, FRT S/D O/S (INCLS 87, 90, 91) (PAINT TO MATCH)	93	F (EXC B5A)	RH	16628414
	9-B3	10.527	HANDLE, FRT S/D O/S (INCLS 87, 90, 91) (PAINT TO MATCH)	93-02	F	LH	16628415
	9-B3	10.527	HANDLE, FRT S/D O/S (INCLS 87, 90, 91) (PAINT TO MATCH)	94-02	F	RH	16628414
	9-B3	10.527	HANDLE, FRT S/D O/S (INCLS 87, 90, 91) (WHITE)	97	F (Z4C)	RH	10280020
	9-B3	10.527	HANDLE, FRT S/D O/S (INCLS 87, 90, 91) (WHITE)	98-02	F (10U)	RH	10280020
	9-B3	10.527	HANDLE, FRT S/D O/S (INCLS 87, 90, 91) (SILVER)	98-02	F (13U)	RH	10287424
	9-B3	10.527	HANDLE, FRT S/D O/S (INCLS 87, 90, 91) (SILVER)	98-02	F (13U)	LH	10287425
	9-B3	10.527	HANDLE, FRT S/D O/S (INCLS 87, 90, 91) (BLUE)	98-02	F (28U)	RH	10287428
	9-B3	10.527	HANDLE, FRT S/D O/S (INCLS 87, 90, 91) (BLUE)	98-02	F (28U)	LH	10287429
	9-B3	10.527	HANDLE, FRT S/D O/S (INCLS 87, 90, 91) (RED)	98-02	F (81U)	RH	10287436
	9-B3	10.527	HANDLE, FRT S/D O/S (INCLS 87, 90, 91) (RED)	98-02	F (81U)	LH	10287437
	9-B3	10.527	HANDLE, FRT S/D O/S (INCLS 87, 90, 91) (BLACK)	98-02	F (41U)	RH	10292377
	9-B3	10.527	HANDLE, FRT S/D O/S (INCLS 87, 90, 91) (TEAL)	98-01	F (79U)	RH	10297456
	9-B3	10.527	HANDLE, FRT S/D O/S (INCLS 87, 90, 91) (RED)	98	F (96U)	LH	10297586
90.		8.939	PIN, SPR, 1/8X7/16 (FRT S/D O/S HDL) (PART OF 89)	93-02	F	1	9410946
91.	9-B3	10.527	BUMPER, FRT S/D O/S HDL (PART OF 89) (10.515)	93-02	F	2	4812932
92.		8.900	BOLT, HEX W/CON WA M10X1.5X30 9.8 POR 20-OD FULL THD (FRT S/D HGE (BODY SI))	93-02		8	11508897
93.	9-B3	10.527	FILLER, FRT S/D O/S HDL	93-97	F	RH	10220455
	9-B3	10.527	FILLER, FRT S/D O/S HDL	93-97	F	LH	10220456
		N.S.	FILLER, FRT S/D O/S HDL	98-02			
94.	9-N28	14.875	WASHER, FRT S/D INTLK STKR	93-02	F	2	10229364
95.		N.S.	PROTECTOR, DR EDGE				

cardiagn.com

96.	9-B11	10.783	REGULATOR, FRT S/D WDO (INCLS 97) (AC-DELCO #10431065)	93-99	F (A31)	RH	10431065
	9-B11	10.783	REGULATOR, FRT S/D WDO (INCLS 97) (AC-DELCO #10431066)	93-02	F (A31)	LH	10431066
	9-B11	10.783	REGULATOR, FRT S/D WDO (INCLS 97) (AC-DELCO #10432922)	99-02	F (A31)	RH	10432922
97.		N.S.	ROLLER, FRT S/D WDO REG ARM (PART OF 96)				
98.	9-B11	10.783	CONNECTOR, MOT-WDO REG (2-WAY F) (W/LEADS) (W/O SEAL) (AC-DELCO #PT407)	93-98	F (A31)	1	12102779
	9-B11	10.783	CONNECTOR, MOT-WDO REG (2-WAY F) (W/LEADS) (W/O SEAL) (AC-DELCO #PT407)	99-02	F	2	12102779
99.		N.S.	RIVET, FRT S/D WDO REG				
100.	9-B11	10.783	MOTOR, FRT S/D WDO REG (AC-DELCO #22137979)	93-02	F (A31)	2	22137979
101.	9-B5	10.553	RETAINER, FRT S/D LK CYL TUMB SPR (BAR TYPE)	93-99	F	AR	601261
	9-B5	10.553	RETAINER, FRT S/D LK CYL TUMB SPR (SPR CLIP) (10.550)	93-02	F	5	16600277
102.	9-B5	10.553	SPRING, FRT S/D LK CYL TUMB (BAR TYPE TUMBLER)	93-02	F	10	3901067
103.	9-B5	10.553	TUMBLER, FRT S/D LK CYL (#1) (SI BAR)	93-02	F	1	3901061
	9-B5	10.553	TUMBLER, FRT S/D LK CYL (#2) (SI BAR)	93-02	F	AR	3901062
	9-B5	10.553	TUMBLER, FRT S/D LK CYL (#4) (SI BAR)	93-02	F	AR	3901064
	9-B5	10.553	TUMBLER, FRT S/D LK CYL (#5) (SI BAR)	93-02	F	AR	3901065
	9-B5	10.553	TUMBLER, FRT S/D LK CYL (#3) (SI BAR)	93-02	F	AR	3901063
104.	9-B4	10.552	CAP, FRT S/D LK CYL (PART OF 86) (BLACK)	93-02	F	2	20496885
	9-B4	10.552	CAP, FRT S/D LK CYL (PART OF 86) (BLACK) (29MM DIA X 7MM HGT) (10.550)	97	F (52B)	1	12503687
	9-B4	10.552	CAP, FRT S/D LK CYL (PART OF 86) (BRIGHT) (10.550)	97	F (52B)	1	20499131
105.	9-B4	10.552	SHUTTER, FRT S/D LK CYL (PART OF 86) (BLACK) (17MM DIA)	93-02	F	1	12503693
	9-B4	10.552	SHUTTER, FRT S/D LK CYL (PART OF 86) (CHROME) (17MM DIA)	97	F (52B)	1	12503692
106.	9-B4	10.552	SPRING, FRT S/D LK CYL SHUTTER (PART OF 86)	93-02	F	1	12503691
107.	9-B6	10.587	BUMPER, FRT S/D LWR	93-02	F	2	10274366
	9-B6	10.587	BUMPER, FRT S/D	93-94	F	RH	20376242
	9-B6	10.587	BUMPER, FRT S/D	93-94	F	AR	20376243

RPO DEFINITIONS
AU3 - LOCK,SIDE DOOR,ELECTRIC
A26 - WINDOW,UNITED KINGDOM AND EUROPEAN GLAZING(EXPORT)

cardiagn.com

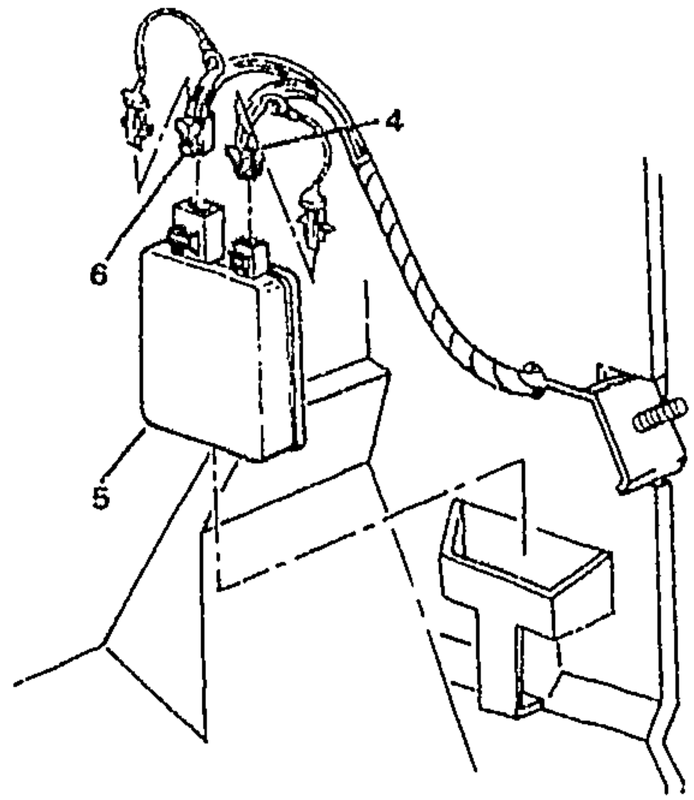

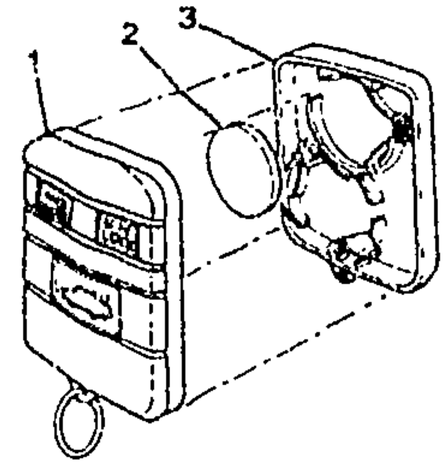

MF10-020

1994-1995 F ENTRY SYSTEM/KEYLESS REMOTE (AU0)

1.	9-A28	10.485	TRANSMITTER, R/CON DR LK (INCLS 2, 3)	94-95	F (AU0)	2	10239647
2.	9-A28	10.485	BATTERY, R/CON DR LK XMTR (PART OF 1) (LITHIUM MAGNESIUM DIOXIDE TYPE) (TRADE NO. CR2016)	94-95	F (AU0)	2	12537045
3.		N.S.	COVER, R/CON DR LK TRANS (PART OF 1)		.....		
4.	9-A28	10.485	CONNECTOR, MDL-R/CON DR LK (BLUE) (8-WAY F) (W/LEADS) (2.535) (AC-DELCO #PT266) ...	94-95	F	1	12101875
5.	9-A28	10.485	RECEIVER, R/CON DR LK	94-95	F (AU0)	1	10273333
6.	9-A28	10.485	CONNECTOR, MDL-R/CON DR LK (BLACK) (8-WAY F W/LEADS, 7-12GA & 4-18GA AS REQ) (2.535) (AC-DELCO #PT1346) ..	94-95	F	1	15306189

RPO DEFINITIONS
AU0 - LOCK CONTROL,REMOTE ENTRY(KEYLESS ENTRY SYSTEM)

cardiagn.com

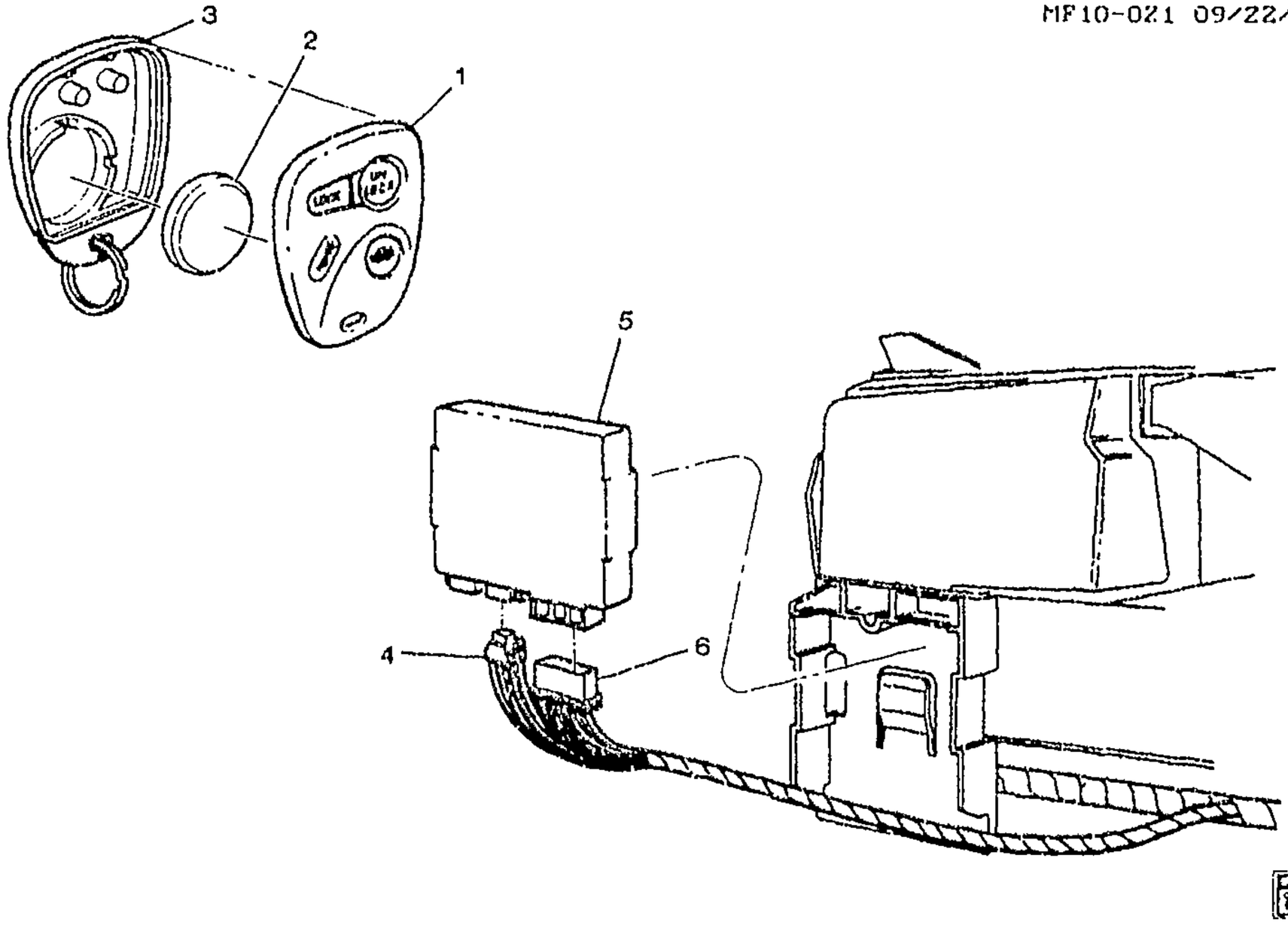

MF10-021

1996-2002 F ENTRY SYSTEM/KEYLESS REMOTE (AU0)

1.	9-A28	10.485	TRANSMITTER, R/CON DR LK (INCLS 2, 3)	96-02	F (AU0, UA6)	AR	16245100
	9-A28	10.485	TRANSMITTER, R/CON DR LK (INCLS 2, 3)	96-98	F (AU0) (EXC UA6)	AR	16245103
2.		N.S.	BATTERY, R/CON DR LK XMTR (PART OF 1)				
3.		N.S.	COVER, R/CON DR LK TRANS (PART OF 1)				
4.	9-M17	2.560	CONNECTOR, MDL-BODY CONT (6-WAY F W/LEADS) (13.090) (AC-DELCO #PT1032)	96-02	F	1	15305888
	9-M17	2.560	CONNECTOR, MDL-BODY CONT (GREEN) (6-WAY F) (16.263)	97-02	F	1	12089527
	9-M17	2.560	CONNECTOR, MDL-BODY CONT (BLUE) (32-WAY F W/O LEADSS) (3.670)	97-02	F	1	12110207
5.	9-M17	2.560	MODULE, BODY CONT	96	F (AU0)	1	16243951
	9-M17	2.560	MODULE, BODY CONT	97	F (AU0)	AR	9353691
	9-M17	2.560	MODULE, BODY CONT	98-02	F (AU0, UA6)	1	9353691
6.		N.S.	CONNECTOR, MDL-ENG CONT				

RPO DEFINITIONS
AU0 - LOCK CONTROL,REMOTE ENTRY(KEYLESS ENTRY SYSTEM)
UA6 - THEFT DETERRENT SYSTEM

cardiagn.com

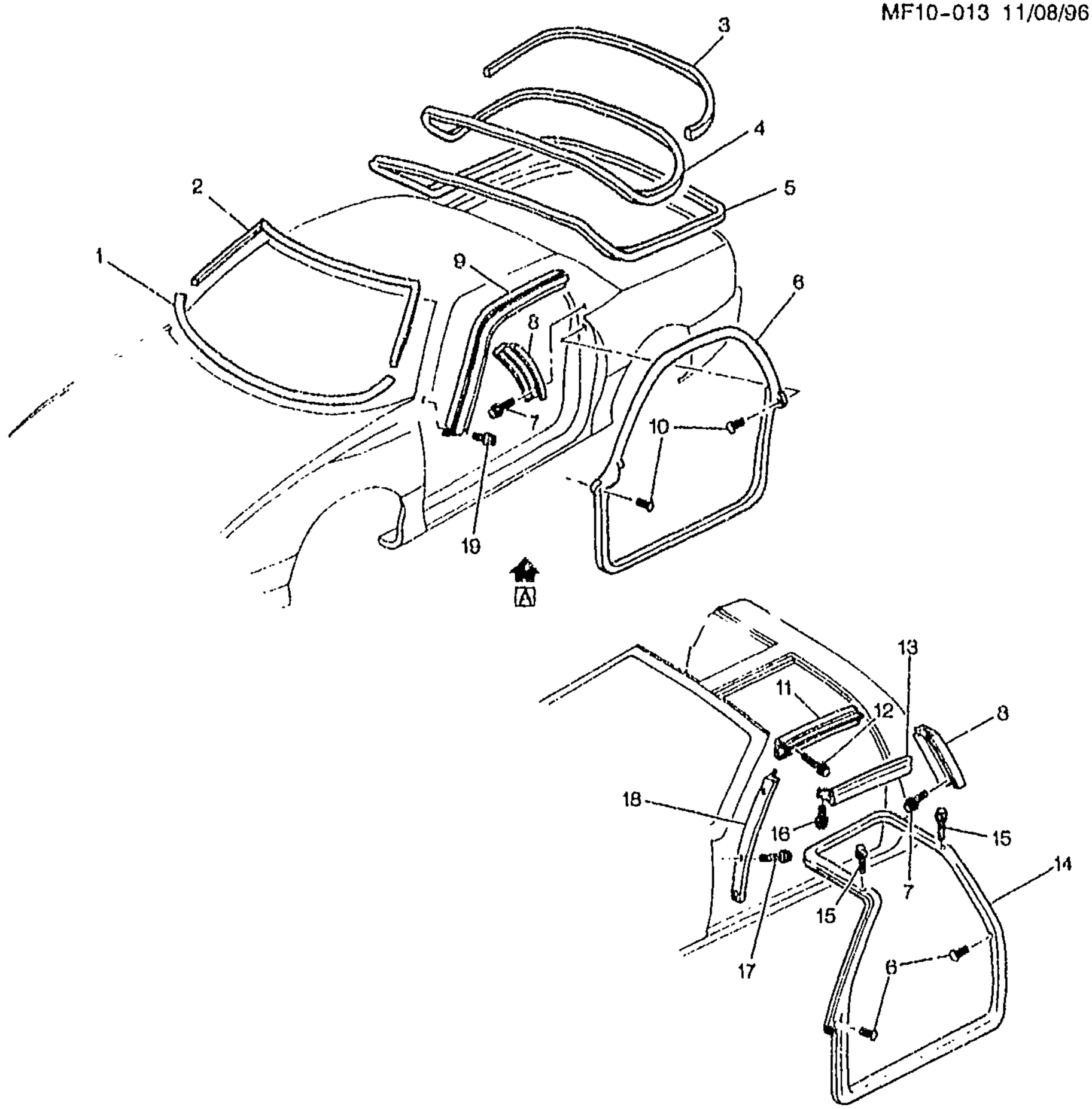

VIEW A
(CC1)

MF10-013

1993-2002 F87 WEATHERSTRIPS

1.	9-A9	10.092	SEALING STRIP, W/S (FOAM TAPE) (223MM LONGER THAN 10130875)	93-02	F	1	10132029
2.	9-A9	10.093	MOLDING, W/S RVL (HIGH	93-00	F87 (EXC CC1)	1	10284786

cardiagn.com

	9–A9	10.093	MOLDING, W/S RVL (LOW GLOSS)	93–00	F87 (CC1)	1	10313067
	9–A9	10.093	MOLDING, W/S RVL (HIGH GLOSS)	93–00	F87 (CC1)	1	10293683
	9–A9	10.093	MOLDING, W/S RVL (HIGH GLOSS) (1ST DES IS HIGH GLOSS, SEE 10313065 FOR 2ND DES.)	01	F87 (EXC CC1) (1ST DES)	1	10284786
	9–A9	10.093	MOLDING, W/S RVL (HIGH GLOSS) (1ST DES IS HIGH GLOSS, FOR 2ND DES SEE 10313067.)	01	F87 (CC1) (1ST DES)	1	10293683
	9–A9	10.093	MOLDING, W/S RVL (LOW GLOSS) (FOR 1ST DES SEE 10284786)	01	F87 (EXC CC1) (2ND DES)	1	10313065
	9–A9	10.093	MOLDING, W/S RVL (LOW GLOSS) (FOR 1ST DES SEE 10293683)	01	F87 (CC1) (2ND DES)	1	10313067
	9–A9	10.093	MOLDING, W/S RVL (LOW GLOSS)	02	F87 (EXC CC1)	1	10313065
	9–A9	10.093	MOLDING, W/S RVL (LOW GLOSS)	02	F87 (CC1)	1	10313067
3.	9–N17	12.269	WEATHERSTRIP, R/CMPT L/WDO AUX	93–94	F87	1	12534759
	9–N17	12.269	WEATHERSTRIP, R/CMPT L/WDO AUX	95–00	F87	1	10294196
	9–N17	12.269	WEATHERSTRIP, R/CMPT L/WDO AUX	02	F87	1	10306248
	9–N17	12.269	WEATHERSTRIP, R/CMPT L/WDO AUX (HIGH GLOSS. SEE P/N 10306248 FOR 2ND DES.)	01	F87 (1ST DES)	1	10433037
	9–N17	12.269	WEATHERSTRIP, R/CMPT L/WDO AUX (LOW GLOSS. SEE P/N 10294196 FOR 1ST DES.)	01	F87 (2ND DES)	1	10306248
4.	9–N17	12.269	WEATHERSTRIP, R/CMPT L/WDO AUX	93–94	F87	1	12534759
	9–N17	12.269	WEATHERSTRIP, R/CMPT L/WDO AUX	95–00	F87	1	10294196
	9–N17	12.269	WEATHERSTRIP, R/CMPT L/WDO AUX	02	F87	1	10306248
	9–N17	12.269	WEATHERSTRIP, R/CMPT L/WDO AUX (HIGH GLOSS. SEE P/N 10306248 FOR 2ND DES.)	01	F87 (1ST DES)	1	10433037
	9–N17	12.269	WEATHERSTRIP, R/CMPT L/WDO AUX (LOW GLOSS. SEE P/N 10294196 FOR 1ST DES.)	01	F87 (2ND DES)	1	10306248
5.	9–N17	12.269	WEATHERSTRIP, R/CMPT L/WDO	93–02	F87	1	10429545
6.	9–B7	10.694	WEATHERSTRIP, FRT S/D	93–95	F87 (EXC CC1)	RH	10262724
	9–B7	10.694	WEATHERSTRIP, FRT S/D	93–02	F87 (EXC CC1)	LH	10302596
	9–B7	10.694	WEATHERSTRIP, FRT S/D	97–02	F87 (EXC CC1)	RH	10286718
	9–B7	10.694	WEATHERSTRIP, FRT S/D (HAS GROOVE IN CENTER OF B–PILLAR SURFACE)	96	F87 (EXC CC1) (2ND DES)	RH	10286718

cardiagn.com

7.		8.977	**SCREW**, LG RND WA HD W/BLK NYL WA, 4.2X 1.41X13, 11-OD, DRILL PT, 6172, PEOR (FRT S/D W/STR RET)	93-02		6	10180421
8.	9-B7	10.694	**RETAINER**, FRT S/D W/STR	93-02	F87	RH	10273941
	9-B7	10.694	**RETAINER**, FRT S/D W/STR	93-02	F87	LH	10273942
9.	9-B8	10.695	**RETAINER**, FRT S/D WDO UPR FRT W/STR (10.721)	93-98	F87	RH	10261684
	9-B8	10.695	**RETAINER**, FRT S/D WDO UPR FRT W/STR (10.721)	93-98	F87	LH	10261685
	9-B8	10.695	**RETAINER**, FRT S/D WDO UPR FRT W/STR (10.721)	99-02	F87 (EXC CC1)	RH	10261684
	9-B8	10.695	**RETAINER**, FRT S/D WDO UPR FRT W/STR (10.721)	99-02	F87 (EXC CC1)	LH	10261685
10.	9-B7	10.694	**RETAINER**, FRT S/D W/STR (FULL FLDG) (10.695)	93-02	F	2	8731909
11.	9-B10	10.721	**RETAINER**, RF S/RL W/STR (W/EXTRUDED AWNING BONDED TO RET)	93-02	F (CC1)	LH	10402079
	9-B10	10.721	**RETAINER**, RF S/RL W/STR (W/EXTRUDED AWNING BONDED TO RET) (10.710)	93-02	F (CC1)	RH	10410058
12.		8.913	**SCREW PAN**, M4.2X1.41X13, 8.15 OD, 6010M, 6138M, C/R, TAP, AB-PT (RAD GRL)	93-02	F87 (CC1)	8	11519838
13.	9-B9	10.710	**WEATHERSTRIP**, FRT S/D WDO UPR (10.721)	93-02	F (CC1)	RH	10261744
	9-B9	10.710	**WEATHERSTRIP**, FRT S/D WDO UPR (10.721)	93-02	F (CC1)	LH	10261745
		N.S.	**WEATHERSTRIP**, FRT S/D WDO UPR	93-98			
14.	9-B7	10.694	**WEATHERSTRIP**, FRT S/D	93-02	F (CC1)	LH	10286717
	9-B7	10.694	**WEATHERSTRIP**, FRT S/D	93-95	F (CC1)	RH	10429541
	9-B7	10.694	**WEATHERSTRIP**, FRT S/D	97-02	F (CC1)	RH	10429541
	9-B7	10.694	**WEATHERSTRIP**, FRT S/D (HAS GROOVE IN CENTER OF B-PILLAR SURFACE)	96	F (CC1) (2ND DES)	RH	10429541
15.	9-N17	12.810	**BOLT**, RF LIFT OFF PNL/WDO SI W/STR (8.900)	93-02	F (CC1)	4	11516084
16.		8.977	**BOLT-SCREW**, M4.2X1.41X13, 5.4 THD, 12.5 OD, GM6172M, GM6138M (RF LIFT OFF WDO BODY SI W/STR)	93-02		4	15714277
17.		8.913	**SCREW PAN**, M4.2X1.41X13, 8.15 OD, 6010M, 6138M, C/R, TAP, AB-PT (RF LIFT WDO BODY SI W/STR W/S FRM RET)	93-02		8	11519838
18.	9-N17	12.810	**RETAINER**, RF LIFT OFF PNL/WDO BODY SI W/STR W/S FRM (10.721)	93-02	F87 (CC1)	RH	10261680
	9-N17	12.810	**RETAINER**, RF LIFT OFF PNL/WDO BODY SI W/STR W/S FRM (10.721)	93-02	F87 (CC1)	LH	10261681
19.		8.977	**SCREW**, LG RND WA HD W/BLK NYL WA, 4.2X 1.41X13, 11-OD,	93-02		14	10180421

cardiagn.com

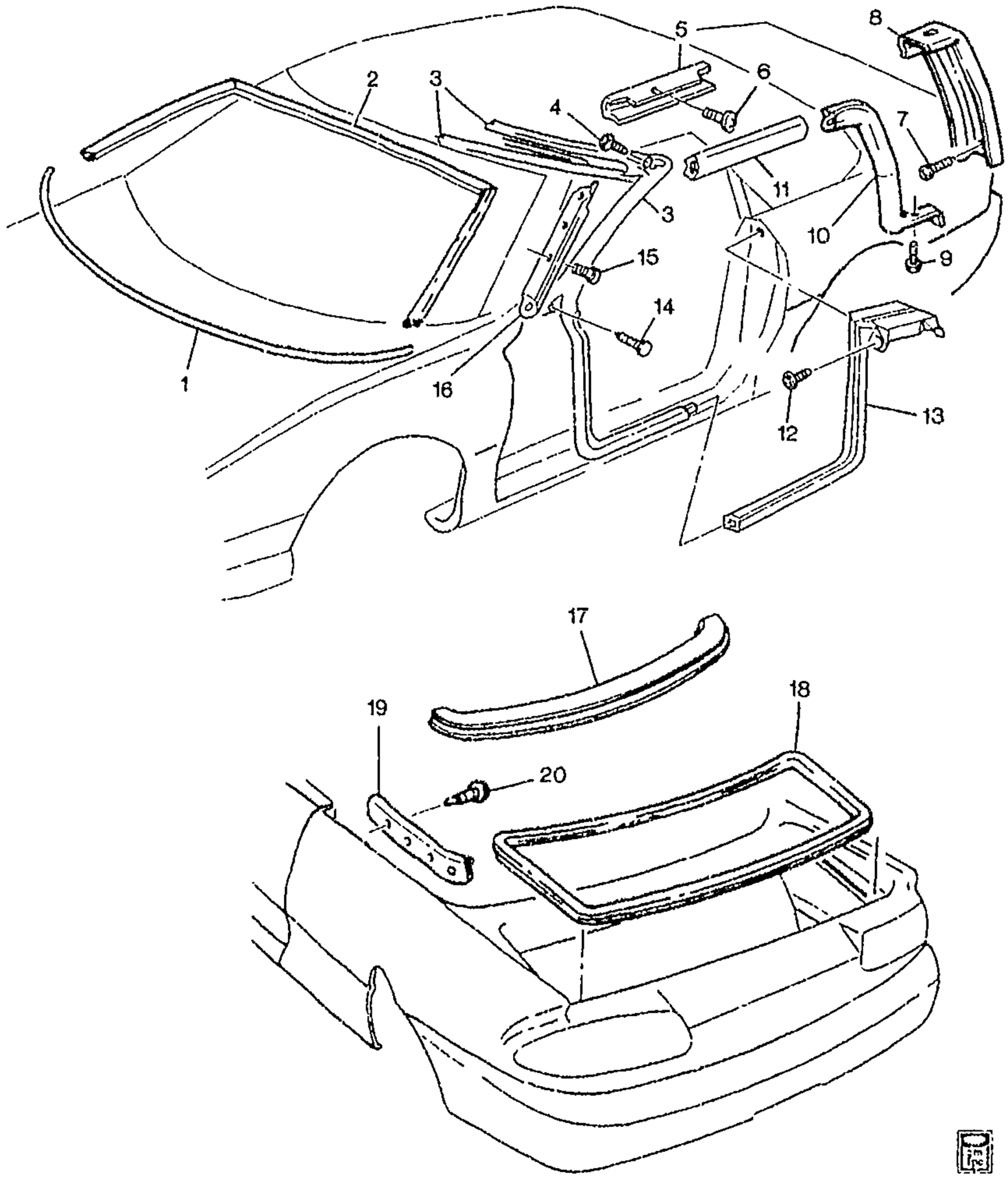

MF10-018

1994-2002 F67 WEATHERSTRIPS

1.	9-A9	10.092	SEALING STRIP W/S (FOAM TAPE) (223MM LONGER THAN 10130875)	94-02 F	1	10132029

cardiagn.com

	9–A9	10.093	**MOLDING**, W/S RVL (HIGH GLOSS) (1ST DES IS HIGH GLOSS, FOR 2ND DES SEE 10313066.)	01	F67 (1ST DES)	1	10284787
	9–A9	10.093	**MOLDING**, W/S RVL (LOW GLOSS) (FOR 1ST DES SEE 10284787)	01	F67 (2ND DES)	1	10313066
	9–A9	10.093	**MOLDING**, W/S RVL (LOW GLOSS)	02	F67	1	10313066
3.	9–N25	14.060	**WEATHERSTRIP**, F/TOP FRT	94–02	F67	1	10277140
4.	9–B7	10.694	**RETAINER**, FRT S/D W/STR (FULL FLDG) (10.695)	94–02	F	2	8731909
5.	9–B10	10.721	**RETAINER**, RF S/RL W/STR	94–02	F67	RH	10253605
	9–B10	10.721	**RETAINER**, RF S/RL W/STR	94–02	F67	LH	10253606
6.	9–B10	10.721	**BOLT**, RF S/RL W/STR RET	94–96	F67	8	10267814
	9–B10	10.721	**BOLT**, RF S/RL W/STR RET (M4.2X1.15X20) (12.810)	97–02	FP67 (10T, 41T, 56T)	8	10092102
7.	9–B9	10.710	**BOLT**, FRT S/D WDO UPR RR W/STR RET (M4.2X1.15X20) (12.810)	94–99	F67	6	10092102
	9–B9	10.710	**BOLT**, FRT S/D WDO UPR RR W/STR (M4.2X1.15X20) (12.810)	00–02	F67	6	10092102
8.	9–B9	10.710	**RETAINER**, FRT S/D WDO UPR RR W/STR	94–02	F67	RH	10253607
	9–B9	10.710	**RETAINER**, FRT S/D WDO UPR RR W/STR	94–02	F67	LH	10253608
9.		8.977	**SCREW**, LG RND WA HD W/BLK NYL WA, 4.2X 1.41X13, 11–OD, DRILL PT, 6172, PEOR (FRT S/D WDO UPR RR W/STR)	94–02		4	10180421
10.	9–B9	10.710	**WEATHERSTRIP**, FRT S/D WDO UPR RR	94–02	F67	RH	10264418
	9–B9	10.710	**WEATHERSTRIP**, FRT S/D WDO UPR RR (BLACK)	94–02	F67	LH	10429548
11.	9–B9	10.710	**WEATHERSTRIP**, FRT S/D WDO UPR (BLACK)	94–02	F67	RH	10429549
	9–B9	10.710	**WEATHERSTRIP**, FRT S/D WDO UPR (BLACK)	94–02	F67	LH	10429550
12.		8.913	**SCREW PAN**, M4.2X1.41X13, 8.15 OD, 6010M, 6138M, C/R, TAP, AB–PT (FRT S/D W/STR)	94–02		AR	11519838
13.	9–B7	10.694	**WEATHERSTRIP**, FRT S/D LWR	94–02	F67	RH	10284313
	9–B7	10.694	**WEATHERSTRIP**, FRT S/D LWR	94–02	F67	LH	10284314
14.	9–B7	10.694	**RETAINER**, FRT S/D W/STR (FULL FLDG) (10.695)	94–02	F	2	8731909
15.		8.913	**SCREW PAN**, M4.2X1.41X13, 8.15 OD, 6010M, 6138M, C/R, TAP, AB–PT (F/TOP FRT W/STR RET)	94–02		AR	11519838
16.	9–N17	12.810	**RETAINER**, RF LIFT OFF PNL/WDO BODY SI W/STR W/S FRM (10.721)	94–02	F67	RH	10261680
	9–N17	12.810	**RETAINER**, RF LIFT OFF PNL/WDO BODY SI W/STR W/S FRM (10.721)	94–02	F67	LH	10261681

cardiagn.com

19.	9–N16	12.118	SEAL, Q/PNL BELT R/MLDG	94–02	F67	RH	10261609
	9–N16	12.118	SEAL, Q/PNL BELT R/MLDG	94–02	F67	LH	10261610
20.		8.908	SCR LGE WASHER HEAD HI–LO BHL (Q/PNL BELT R/MLDG) (8.977)	94–02	F	8	11509231

RPO DEFINITIONS

10T – VINYL TOP COLOR,ARCTIC WHITE
41T – VINYL TOP COLOR,BLACK
56T – VINYL TOP COLOR,MED NEUTRAL

cardiagn.com

ILLUSTRATION INDEX

	TITLE	GRID
1993–2002	F SEAT HARDWARE/REAR MOUNTING	9–I4
1993–1994	F ADJUSTER ASM/SEAT POWER 6–WAY(AC3)	9–I5
1995–2002	F ADJUSTER ASM/SEAT POWER 6–WAY(AG1)	9–I5
1993–1997	F ADJUSTER ASM/SEAT MANUAL 2–WAY (DRIVER)	9–I13
1993–2002	F ADJUSTER ASM/SEAT MANUAL 2–WAY (PASSENGER)(AR9)	9–I15
1993–2002	F ADJUSTER ASM/SEAT MANUAL 4–WAY(AH3)	9–I17
1993–2002	F67 LAMPS/INTERIOR	9–I19
1994–2002	F67 LAMPS/INTERIOR	9–I22

cardiagn.com

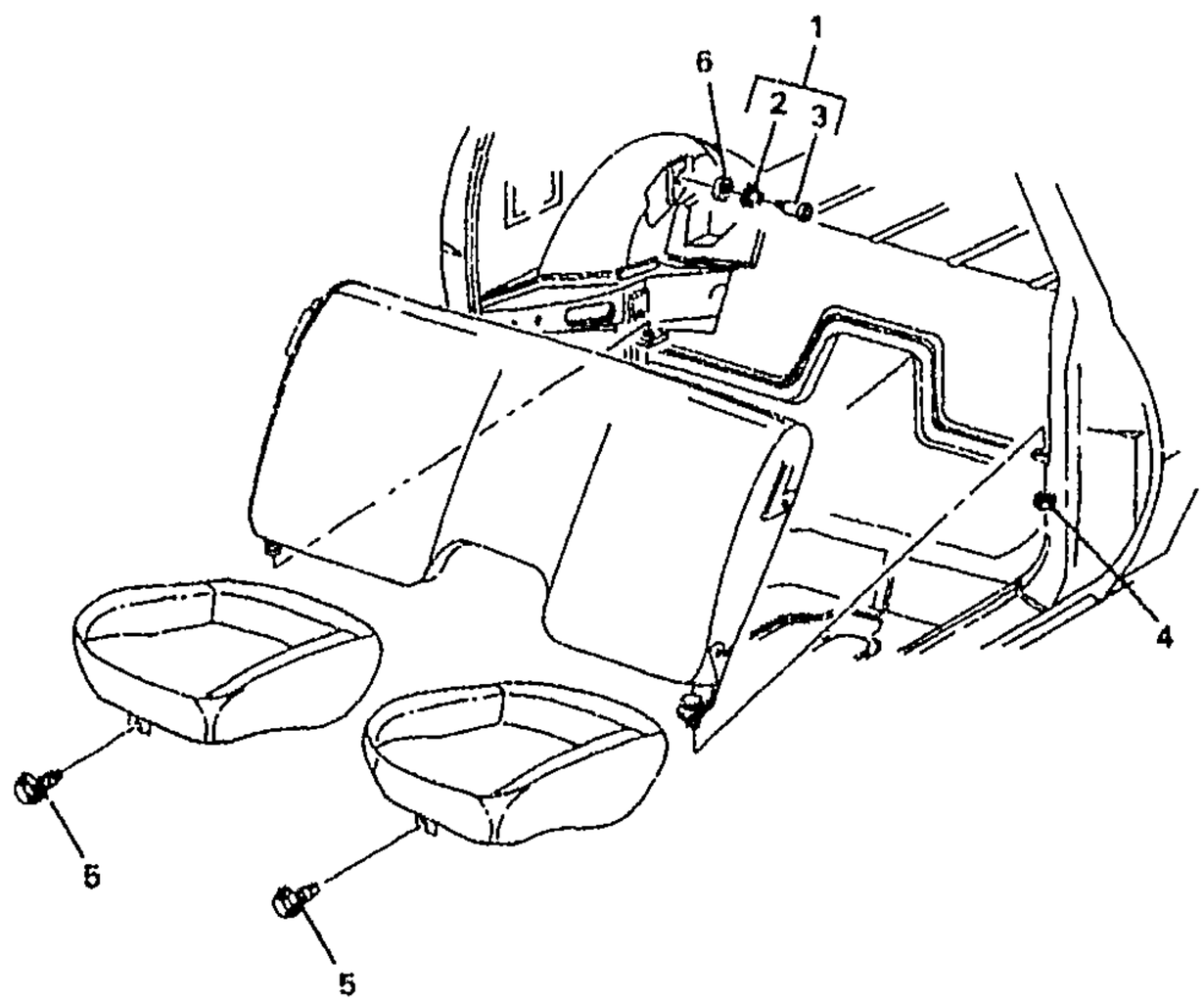

MF11-014

1993–2002 F SEAT HARDWARE/REAR MOUNTING

1.	9–N19	12.981	**BOLT**, R/CMPT ACC DR LK STKR (INCLS 2, 3) (11.390)	93–02	F	2	16718900
	9–N19	12.981	**BOLT**, R/CMPT ACC DR LK STKR (INCLS 2, 3) (M10X1.5X73.5) (W/ WASHER)	02	F	1	11518810
	9–N19	12.981	**BOLT**, R/CMPT ACC DR LK STKR (INCLS 2, 3) (M10X1.5X73.5, 14 THD) (W/O WASHER)	02	F	1	11518811
2.		N.S.	**SLEEVE**, R/SEAT BK CUSH LK STKR (PART OF 1)				
3.	9–C26	11.620	**BOLT**, R/SEAT BK CUSH LK (PART OF 1) (12X54–10X1.5) (RD HD SHLDR) (11.390)	93–02	F	2	20148470
4.		8.917	**NUT ASM**, CON TTH, M8X1.25 THD, 23.5 WA OD (FLDG R/SEAT BK CUSH PIV SUPT)	93–02	F	2	20453625
5.		8.977	**SCREW**, HEX W/WA, M8X1.25X30, THD ROLL, PO (R/SEAT CUSH FRM)	93–02	F	2	11514478
6.		8.929	**WASHER**, FLAT, HARD, 10.25–ID, 25.1–OD, 2.57–THK, 1055, ZP (FLDG 2ND ST BK LAT STKR)	93–02	F	2	1727059

cardiagn.com

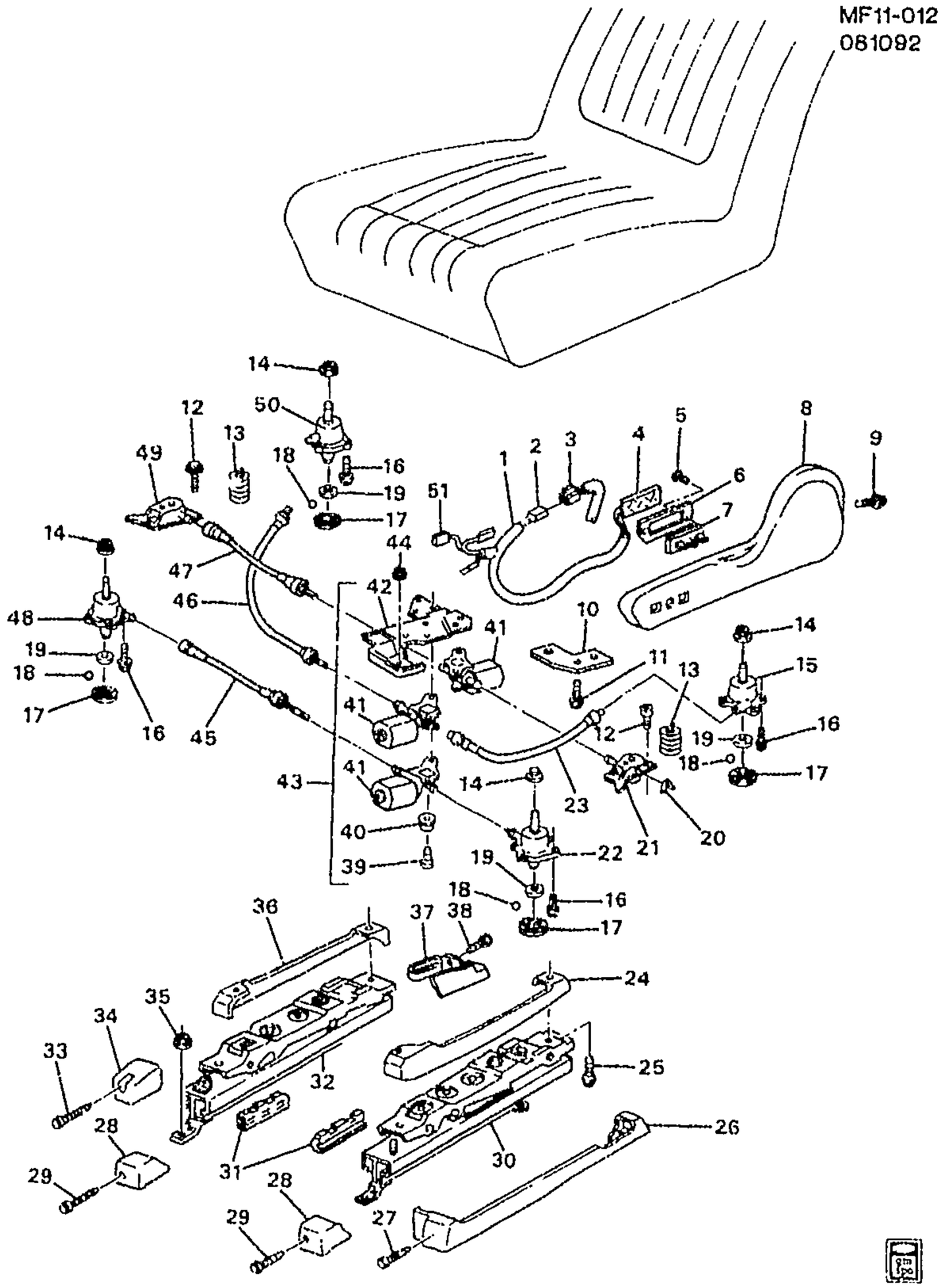

MF11-012

1993-1994 F ADJUSTER ASM/SEAT POWER 6-WAY(AC3)
1995-2002 F ADJUSTER ASM/SEAT POWER 6-WAY(AG1)

1.	9-N19	13.090	HARNESS, D/SEAT ADJR WRG (INCLS 2, 4, 51)	93-94	F (AC3, AR9)	1	12121383
	9-N19	13.090	HARNESS, D/SEAT ADJR WRG (INCLS 2, 4, 51)	95-97	F (AG1, AR9)	1	12121383

cardiagn.com

	9-N19	13.090	HARNESS, D/SEAT ADJR WRG (INCLS 2, 4, 51) (USED WITH TRIM CODE ENDING IN 4)	98-02	F (AG1, AQ9)	1	12181643
	9-N19	13.090	HARNESS, D/SEAT ADJR WRG (INCLS 2, 4, 51) (USED WITH TRIM CODES ENDING IN B, D OR 2)	98-02	F (AG1, AR9)	1	15302898
	9-N19	13.090	HARNESS, D/SEAT ADJR WRG (INCLS 2, 4, 51)	02	F87 (AG1, AR9)	1	15302898
2.		N.S.	CONNECTOR, SW-PWR ST ADJR (PART OF 1)		.....		
3.	9-C18	11.556	CONNECTOR, SW-PWR ST ADJR (W/LEADS) (2-WAY M, W/LEADS) (2.535) (AC-DELCO #PT228)	93-02	F	1	12101836
4.	9-N23	13.100	CONNECTOR, ST ADJR SW (W/LEADS) (PART OF 1) (8-WAY F, W/LEADS) (2.530) (AC-DELCO #PT424)	93-94	F (AC3)	1	12116251
	9-N23	13.100	CONNECTOR, ST ADJR SW (W/LEADS) (PART OF 1) (8-WAY F, W/LEADS) (2.530) (AC-DELCO #PT424)	95-02	F (AG1)	1	12116251
5.		N.S.	BOLT, ST ADJR SW CVR		.....		
6.	9-C20	11.558	BRACKET, D/SEAT ADJR SW (SW TO CVR) (TO SEAT)	93-94	F (AC3, AR9)	1	16601958
	9-C20	11.558	BRACKET, D/SEAT ADJR SW (SW TO CVR) (TO SEAT)	95-02	F (AG1, AR9)	1	16601958
7.	9-C20	11.558	SWITCH, D/SEAT ADJR (EBONY) (6-WAY)	93-94	F (AC3, AR9)	1	22543666
	9-C20	11.558	SWITCH, D/SEAT ADJR (EBONY) (6-WAY)	95-02	F (AG1, AR9)	1	22543666
8.	9-C23	11.573	COVER, D/SEAT OTR ADJR FIN (GRAPHITE)	93	F (AC3, AR9, 12B, 14B, 12C)	1	16724410
	9-C23	11.573	COVER, D/SEAT OTR ADJR FIN (BEIGE)	93	F (AC3, AR9, 64B)	1	16724412
	9-C23	11.573	COVER, D/SEAT OTR ADJR FIN (GRAPHITE)	94	F (AC3, AR9, 12B, 14B, 73B, 122)	1	16724410
	9-C23	11.573	COVER, D/SEAT OTR ADJR FIN (BEIGE)	94	F (AC3, AR9, 64B, 642)	1	16724412
	9-C23	11.573	COVER, D/SEAT OTR ADJR FIN (GRAPHITE)	95	F (AG1, AR9, 12B, 14B, 73B, 122)	1	16724410
	9-C23	11.573	COVER, D/SEAT OTR ADJR FIN (BEIGE)	95	F (AG1, AR9, 64B, 642)	1	16724412
	9-C23	11.573	COVER, D/SEAT OTR ADJR FIN (GRAPHITE)	96	F (AG1, AR9, 12B, 73B, 122)	1	16724410
	9-C23	11.573	COVER, D/SEAT OTR ADJR FIN (GRAY)	96	F (AG1, AR9, 14B)	1	16724411
	9-C23	11.573	COVER, D/SEAT OTR ADJR FIN (NEUTRAL)	96-99	F (AG1, AR9, 52B, 52D, 522)	1	16789718
	9-C23	11.573	COVER, D/SEAT OTR ADJR FIN (PEWTER)	97	F (AG1, AR9, 92I)	1	16802929
	9-C23	11.573	COVER, D/SEAT OTR ADJR FIN (GRAY)	97	F67 (AG1, AR9, 103, 10C, 14B, 142, 73B) ...	1	16802928
	9-C23	11.573	COVER, D/SEAT OTR ADJR FIN (GRAY)	97	F87 (AG1, AR9, 103, 10C, 14B, 142, 73B) ...	1	16802928
	9-C23	11.573	COVER, D/SEAT OTR ADJR FIN (GRAY)	98-99	F67 (AG1, AR9, 102, 14B, 14D, 142, 73B) ...	1	16802928

cardiagn.com

	9-C23	11.573	**COVER**, D/SEAT OTR ADJR FIN (GRAY)	98-99	F87 (AG1, AR9, 102, 14B, 14D, 142, 73B)	1	16802928
	9-C23	11.573	**COVER**, D/SEAT OTR ADJR FIN (NEUTRAL)	00-02	F (AG1, AR9, 52B, 522)	1	16789718
	9-C23	11.573	**COVER**, D/SEAT OTR ADJR FIN (PEWTER)	00-02	F (AG1, AR9, 92B)	1	16802929
	9-C23	11.573	**COVER**, D/SEAT OTR ADJR FIN (NEUTRAL)	02	F (AG1, AR9, 522)	1	16789718
9.	9-C12	11.377	**BOLT**, D/SEAT RECL LWR FIN CVR BRKT (M4.2X1.41X35) (8.977)	93-02	F	2	11514957
10.	9-C20	11.558	**BRACKET**, D/SEAT ADJR SW (TO OTR CVR)	93-02	F	1	16718893
11.		8.913	**SCREW**, PAN HD T-15 TORX 4X.7X10 HDR PT 4.8 PC (BRKT TO CVR)	93-02	F	2	11508744
12.		N.S.	**SCREW**, HORZ ADJ (PART OF 30 & 32)				
13.	9-C25	11.581	**SPRING**, D/SEAT ADJR VERT ASST (PART OF 30 & 32)	93-02			
14.		8.917	**NUT**, HEX PREV TORQ W/SPL CONE, 3/8-16 (PART OF 15, 22, 30, 32, 48, 50)	93-02	Y	AR	16608269
15.	9-C18	11.556	**ACTUATOR**, D/SEAT OTR ADJR RR VERT (INCL 14) (11.561)	93-94	F (AC3, AR9)	1	12392595
	9-C18	11.556	**ACTUATOR**, D/SEAT OTR ADJR RR VERT (INCL 14) (11.561)	95-96	F (AG1, AR9)	1	12392595
	9-C18	11.556	**ACTUATOR**, D/SEAT OTR ADJR RR VERT (INCLS 14, 17, 18, 19)	97	F (AG1, AR9)	1	16807203
	9-C18	11.556	**ACTUATOR**, D/SEAT OTR ADJR RR VERT (INCLS 14, 17, 18, 19)	98-02	F (AG1, AQ9)	1	16807202
	9-C18	11.556	**ACTUATOR**, D/SEAT OTR ADJR RR VERT (INCLS 14, 17, 18, 19)	98-02	F (AG1, AR9)	1	16807202
16.		8.913	**SCREW**, PAN HD SHLDR HI-LO 2" (PART OF 30 & 32)	93-02	F	AR	16624556
17.		N.S.	**BEARING**, D/SEAT THR (PART OF 15, 22, 30, 32, 48, 50)				
18.		8.899	**BALL**, SPECIAL, 3/16 STEEL (PART OF 15, 22, 30, 32, 48, 50) (AC-DELCO #7002117)	93-02		24	7002117
19.	9-C20	11.561	**WASHER**, D/SEAT ADJR VERT ACTR WMGR THR (PART OF 15, 22, 30, 32, 48, 50) (11.556) (AC-DELCO #1919478)	93-02	F	4	1919478
20.	9-C20	11.561	**COUPLING**, D/SEAT ADJR CBL (11.556)	93	F87 (AC3, AR9)	AR	16719247
	9-C20	11.561	**COUPLING**, D/SEAT ADJR CBL (11.556)	98-02	F (AG1, AQ9)	1	16719247
21.		N.S.	**ACTUATOR**, D/SEAT OTR ADJR HORIZ (PART OF 30)				
22.	9-C18	11.556	**ACTUATOR**, D/SEAT OTR ADJR FRT VERT (INCL 14) (PART OF 30) (11.561)	93-94	F (AC3, AR9)	1	12392594
	9-C18	11.556	**ACTUATOR**, D/SEAT OTR ADJR FRT VERT (INCL 14) (PART OF 30) (11.561)	95-96	F (AG1, AR9)	1	12392594

cardiagn.com

	9–C18	11.556	**ACTUATOR**, D/SEAT OTR ADJR FRT VERT (INCLS 14, 17, 18, 19) (HAS CLINCH NUT ON TOP OF JACKSCREW)	97–02	F (AG1, AR9)	1	16607860
	9–C18	11.556	**ACTUATOR**, D/SEAT OTR ADJR FRT VERT (INCLS 14, 17, 18, 19) (HAS CLINCH NUT ON TOP OF JACKSCREW)	98–02	F (AG1, AQ9)	1	16607860
23.	9–C20	11.561	**CABLE**, D/SEAT VERT ADJR (OTR RR) (BLACK) (341.0MM) ...	93–94	F (AC3)	LH	20651072
	9–C20	11.561	**CABLE**, D/SEAT VERT ADJR (OTR RR) (BLACK) (341.0MM) ...	95–02	F (AG1)	LH	20651072
24.	9–C23	11.573	**COVER**, D/SEAT OTR ADJR UPR FIN	93–94	.....		
	9–C23	11.573	**COVER**, D/SEAT OTR ADJR UPR FIN (BLACK)	98–02	F (AG1, AQ9)	1	20564054
25.		8.900	**BOLT**, HWH, M8X1.25X40, SPL FULLTHD, AC PT, 10.9 PZOR (D/SEAT ADJR)	93–02	.....	4	11515758
26.	9–C23	11.573	**COVER**, D/SEAT OTR ADJR LWR FIN (BLACK)	93–94	F (AC3, AR9)	1	16600216
	9–C23	11.573	**COVER**, D/SEAT OTR ADJR LWR FIN (BLACK)	95–02	F	1	16600216
27.		8.977	**SCREW**, OVAL CSK TRIM HD W/WA TYPE AB (4.2X1.4X20) (D/SEAT OTR ADJR LWR) (16.682)	93–02	.....	3	12338093
28.	9–C23	11.573	**COVER**, D/SEAT INR ADJR FRT FIN (BLACK)	93–94	F (AC3, AR9)	1	20564041
	9–C23	11.573	**COVER**, D/SEAT INR ADJR FRT FIN (BLACK)	95–97	F (AG1, AR9)	1	20564041
	9–C23	11.573	**COVER**, D/SEAT INR ADJR FRT FIN (BLACK)	98–02	F (AG1, AQ9, AR9)	1	20564041
	9–C23	11.573	**COVER**, D/SEAT OTR ADJR FRT FIN	93–94	.....		
	9–C23	11.573	**COVER**, D/SEAT OTR ADJR FRT FIN (BLACK)	98–02	F (AG1, AQ9, AR9)	1	20564041
29.		8.977	**SCREW**, PAN HD C/R M4.8X1.59X13 POR (D/SEAT ADJR FRT TR)	93–02	.....	2	11504230
30.	9–C20	11.561	**ADJUSTER**, D/SEAT OTR (INCLS 12–19, 21, 22, 31) (LOW PROFILE)	93–94	F (AC3)	1	16726718
	9–C20	11.561	**ADJUSTER**, D/SEAT OTR (INCLS 12–19, 21, 22, 31) (LOW PROFILE)	95–97	F (AG1)	1	16726718
	9–C20	11.561	**ADJUSTER**, D/SEAT OTR (INCLS 12–19, 21, 22, 31) (6–WAY ELEC)	99–02	F (AG1, AR9, AQ9)	1	16813202
	9–C20	11.561	**ADJUSTER**, D/SEAT OTR (USE W/TRIM CODES ENDING IN B, D, 2) (INCLS 12–19, 21, 22, 31) (LOW PROFILE) (RR VERT CABLE MOUNTED ON OTR SIDE OF ADJ CHANNEL) (FOR 2ND DES SEE 16813202)	98	F (AG1, AR9) (1ST DES)	1	16726718

cardiagn.com

	9-C20	11.561	**ADJUSTER**, D/SEAT OTR (USE W/TRIM CODES ENDING IN B, D, 2) (INCLS 12-19, 21, 22, 31) (6-WAY ELEC) (RR VERT CABLE MOUNTED ON INR SIDE OF ADJ CHANNEL) (FOR 1ST DES SEE16726718)	98	F (AG1, AR9) (2ND DES)	1	16813202
31.		N.S.	**ADJUSTER**, D/SEAT OTR (PART OF 30, 32) (SERVICED BY UP ASM)		F		
		N.S.	**ADJUSTER**, D/SEAT INR (PART OF 30, 32) (SERVICED BY UP ASM)		.....		
32.	9-C20	11.561	**ADJUSTER**, D/SEAT INR (INCLS 12-14, 16-19, 31, 48-50)	93-94	F (AC3, AR9)	1	16726701
	9-C20	11.561	**ADJUSTER**, D/SEAT INR (INCLS 12-14, 16-19, 31, 48-50)	95-97	F (AG1, AR9)	1	16726701
	9-C20	11.561	**ADJUSTER**, D/SEAT INR (INCLS 12-14, 16-19, 31, 48-50) (RR VERT CABLE MOUNTED ON OTR SIDE OF ADJ CHANNEL) (FOR 2ND DES SEE 16813203) .	98	F (AG1, AQ9, AR9) (1ST DES)	1	16726701
	9-C20	11.561	**ADJUSTER**, D/SEAT INR (INCLS 12-14, 16-19, 31, 48-50) (RR VERT CABLE MOUNTED ON INR SIDE OF ADJ CHANNEL) (FOR 1ST DES SEE 16726701)	98	F (AG1, AQ9, AR9) (2ND DES)	1	16813203
	9-C20	11.561	**ADJUSTER**, D/SEAT INR (INCLS 12-14, 16-19, 31, 48-50)	99-02	F (AG1, AR9)	1	16813203
	9-C20	11.561	**ADJUSTER**, D/SEAT INR (USE W/TRIM CODE ENDING IN 4) (INCLS 12-14, 16-19, 31, 48-50)	99-02	F (AG1, AQ9)	1	16813203
33.	9-C23	11.573	**BOLT**, D/SEAT INR ADJR LWR FIN CVR	93-02	.....		
34.	9-C23	11.573	**COVER**, D/SEAT INR ADJR LWR FRT FIN CVR	93-94	.....		
	9-C23	11.573	**COVER**, D/SEAT INR ADJR LWR FRT FIN CVR (BLACK)	98-02	F (AG1, AQ9)	1	20564043
35.		8.917	**NUT ASM**, CON TTH, M8X1.25 THD, 23.5 WA OD (D/SEAT ADJR)	93-02	.....	4	20453625
36.	9-C23	11.573	**COVER**, D/SEAT INR ADJR UPR FIN	93-94	.....		
	9-C23	11.573	**COVER**, D/SEAT INR ADJR UPR FIN (BLACK)	98-02	F (AG1, AQ9)	1	20564052
37.	9-C23	11.573	**COVER**, D/SEAT INR ADJR LWR RR FIN (BLACK)	93-94	F (AC3, AR9)	1	16600220
	9-C23	11.573	**COVER**, D/SEAT INR ADJR LWR RR FIN (BLACK)	95-97	F (AG1, AR9)	1	16600220
	9-C23	11.573	**COVER**, D/SEAT INR ADJR LWR RR FIN (BLACK)	98-00	F (AG1, AQ9, AR9)	1	16600220
	9-C23	11.573	**COVER**, D/SEAT INR ADJR LWR RR FIN (BLACK)	01-02	F (AG1, AR9)	1	16600220
	9-C23	11.573	**COVER**, D/SEAT INR ADJR LWR RR FIN (BLACK)	02	F (AG1, AQ9)	1	16600220

cardiagn.com

38.		8.977	**SCREW**, OVAL CSK TRIM HD W/WA TYPE AB (4.2X1.4X20) (D/SEAT INR ADJR LWR) (16.682)	93–02	.....	1	12338093
39.	9–C20	11.561	**SPACER**, D/SEAT ADJR ACTR MOT (PART OF 41, 43)	93–94	F (AC3)	3	20536328
	9–C20	11.561	**SPACER**, D/SEAT ADJR ACTR MOT (PART OF 41, 43)	95–02	F (AG1)	3	20536328
40.	9–C18	11.556	**INSULATOR**, D/SEAT ADJR ACTR MOT (PART OF 41, 43)	93–94	F (AC3)	3	20536327
	9–C18	11.556	**INSULATOR**, D/SEAT ADJR ACTR MOT (PART OF 41, 43)	95–02	F (AG1)	3	20536327
41.	9–C18	11.556	**MOTOR**, D/SEAT ADJR ACTR (INCLS 39, 40) (PART OF 43) (ITT AUTO ELEC) (AC–DELCO #22138358)	93–02	F	3	22138358
	9–C18	11.556	**MOTOR**, D/SEAT ADJR ACTR (PART OF 43) (LEAR) (6–WAY ELEC KEYANG MTR–ROUND HSG) (AC–DELCO #16606971) .	93–02	F	3	16606971
42.	9–C18	11.556	**BRACKET**, D/SEAT ADJR ACTR (PART OF 43) (MTR SUPT)	93–94	F (AC3, AR9)	1	20651090
	9–C18	11.556	**BRACKET**, D/SEAT ADJR ACTR (PART OF 43) (MTR SUPT)	95–02	F (AG1, AR9)	1	20651090
43.	9–C18	11.556	**ACTUATOR**, D/SEAT ADJR (INCLS 39–42) (AC–DELCO #16739533)	94	F (AC3, AR9)	1	16739533
	9–C18	11.556	**ACTUATOR**, D/SEAT ADJR (INCLS 39–42) (AC–DELCO #16739533)	95–02	F (AG1, AR9)	1	16739533
	9–C18	11.556	**ACTUATOR**, D/SEAT ADJR (INCLS 39–42) (AC–DELCO #16739533)	98–02	F (AG1, AQ9)	1	16739533
	9–C18	11.556	**ACTUATOR**, D/SEAT ADJR (OPTIONAL ADJUSTER) (INCLS 39–42) (KEYANG MTR–ROUND HSG, WITH MOTOR & SUPPORT) (AC–DELCO #16607941)	93–94	F (AC3, AR9)	1	16607941
	9–C18	11.556	**ACTUATOR**, D/SEAT ADJR (OPTIONAL ADJUSTER) (INCLS 39–42) (KEYANG MTR–ROUND HSG, WITH MOTOR & SUPPORT) (AC–DELCO #16607941)	95–99	F (AG1, AR9)	1	16607941
	9–C18	11.556	**ACTUATOR**, D/SEAT ADJR (OPTIONAL ADJUSTER) (INCLS 39–42) (KEYANG MTR–ROUND HSG, WITH MOTOR & SUPPORT) (AC–DELCO #16607941)	98–99	F (AG1, AQ9)	1	16607941
44.		8.917	**NUT**, HFH, M8X1.25, 17.9 OD, 738 THK, 13MM HEX, 10, ZF (D/SEAT ACTR TO ADJ) (8.915) (AC–DELCO #11514596)	93–02	.....	1	11514596
45.	9–C20	11.561	**CABLE**, D/SEAT VERT ADJR (INR FRT) (YELLOW) (290.0MM) .	93–94	F (AC3)	1	20489051
	9–C20	11.561	**CABLE**, D/SEAT VERT ADJR (INR FRT) (YELLOW) (290.0MM) .	95–02	F (AG1)	1	20489051
46.	9–C20	11.561	**CABLE**, D/SEAT VERT ADJR (INR RR) (BROWN) (411.0MM) ...	93–94	F (AC3)	RH	20651135

cardiagn.com

	9–C20	11.561	**CABLE**, D/SEAT VERT ADJR (INR RR) (BROWN) (411.0MM) . . .	95–02	F (AG1)	RH	20651135
47.	9–C20	11.561	**CABLE**, D/SEAT HORIZ ADJR (YELLOW) (290.0MM)	93–94	F (AC3)	1	20489051
	9–C20	11.561	**CABLE**, D/SEAT HORIZ ADJR (YELLOW) (290.0MM)	95–02	F (AG1)	1	20489051
48.	9–C18	11.556	**ACTUATOR**, D/SEAT INR ADJR FRT VERT (INCLS 14) (PART OF 32)	93–94	F (AC3, AR9)	1	16807200
	9–C18	11.556	**ACTUATOR**, D/SEAT INR ADJR FRT VERT (INCLS 14) (PART OF 32)	95–96	F (AG1, AR9)	1	16807200
	9–C18	11.556	**ACTUATOR**, D/SEAT INR ADJR FRT VERT (INCLS 14, 17, 18, 19) .	97	F (AG1, AR9)	1	16807200
	9–C18	11.556	**ACTUATOR**, D/SEAT INR ADJR FRT VERT (INCLS 14, 17, 18, 19) .	98–02	F (AG1, AR9, AQ9)	1	16807200
49.		N.S.	**ACTUATOR**, D/SEAT INR ADJR HORIZ (PART OF 32)		. . . . .		
50.	9–C18	11.556	**ACTUATOR**, D/SEAT INR ADJR RR VERT (INCLS 14) (PART OF 32)	93–94	F (AC3, AR9)	1	16807202
	9–C18	11.556	**ACTUATOR**, D/SEAT INR ADJR RR VERT (INCLS 14) (PART OF 32)	95–02	F (AG1, AR9)	1	16807202
	9–C18	11.556	**ACTUATOR**, D/SEAT INR ADJR RR VERT (INCLS 14) (PART OF 32)	98–02	F (AG1, AQ9)	1	16807202
	9–C18	11.556	**ACTUATOR**, D/SEAT INR ADJR RR VERT (INCLS 14) (PART OF 32)	02	F (AG1, AQ9, AR9)	1	16807203
51.	9–C18	11.556	**CONNECTOR**, MOT–ST VERT ADJR ACTR (FRT) (D/SEAT (PART OF 1)) (2–WAY F W/LEADS) (2.535) (AC–DELCO #PT212)	93–02	F	1	12101820
	9–C18	11.556	**CONNECTOR**, MOT–ST VERT ADJR ACTR (RR) (D/SEAT (PART OF 1)) (BLUE) (2–WAY F W/LEADS) (AC–DELCO #PT398)	93–02	F	1	12102769

RPO DEFINITIONS

AC3 – ADJUSTER,SEAT,6–WAY POWER,BUCKET,DRIVER
AG1 – ADJUSTER,SEAT,6–WAY POWER,DRIVER(60–40)(VAR 2)
AQ9 – SEAT,FRONT BUCKET,DRIVER,PASSENGER,RECLINING
AR9 – SEAT,FRONT BUCKET,DRIVER,PASSENGER,MANUAL RECLINING(EUROPEAN STYLE)
10C – TRIM COMBINATION CLOTH, ARCTIC WHITE (97)
102 – TRIM COMBINATION LEATHER, ARCTIC WHITE (2) (94)
103 – TRIM COMBINATION – LEATHER,ARCTIC WHITE
12B – TRIM COMBINATION CLOTH, GRAPHITE (B) (92)
12C – TRIM COMBINATION CLOTH, GRAPHITE (C) (92)
122 – TRIM COMBINATION LEATHER,GRAPHITE
14B – TRIM COMBINATION – CLOTH, DK GRAY
14D – TRIM COMBINATION CLOTH, LT GRAY
142 – TRIM COMBINATION LEATHER, LT GRAY
52B – TRIM COMBINATION CLOTH, LT NEUTRAL
52D – TRIM COMBINATION CLOTH, NEUTRAL
522 – TRIM COMBINATION – LEATHER, NEUTRAL
64B – TRIM COMBINATION CLOTH, LT BEIGE
642 – TRIM COMBINATION LEATHER, LT BEIGE

cardiagn.com

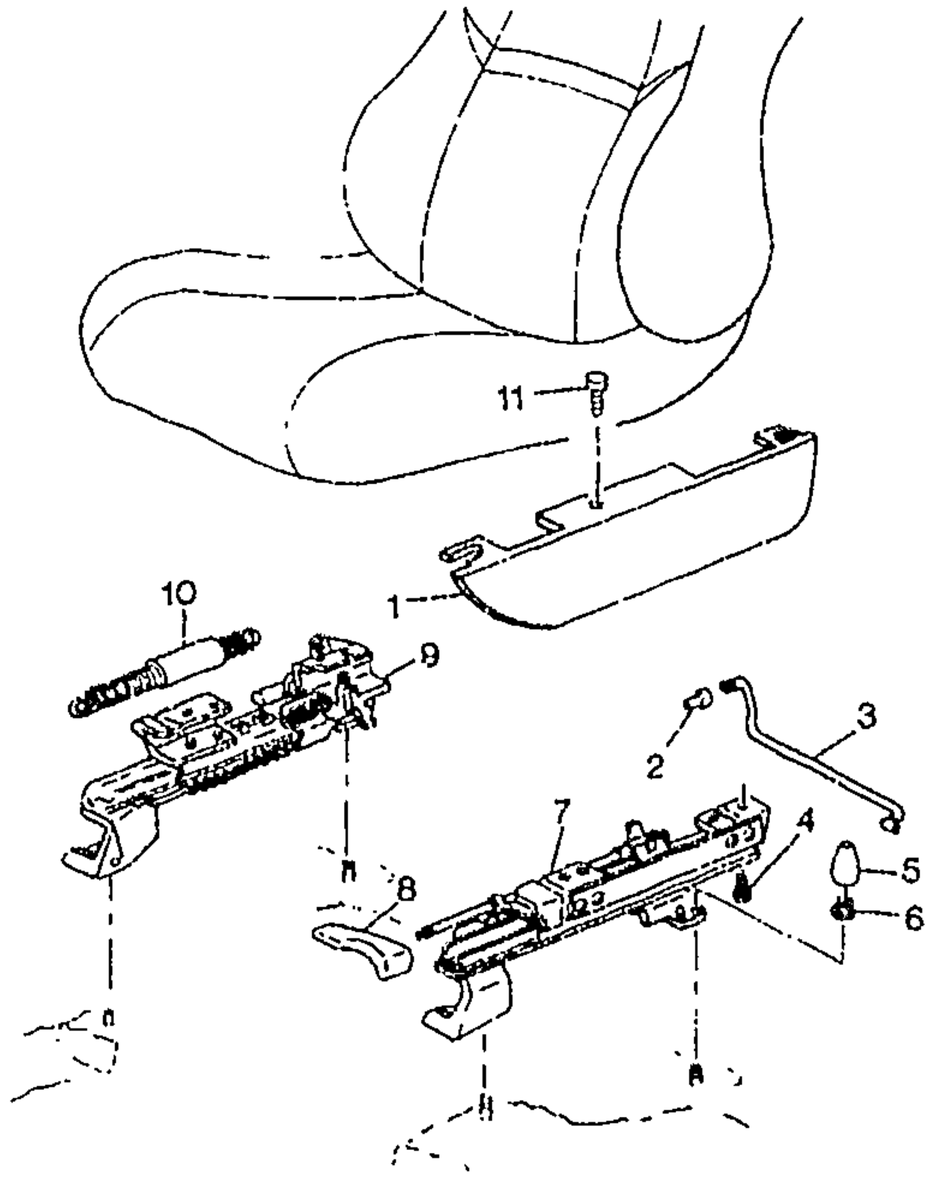

MF11-015

1993-1997 F ADJUSTER ASM/SEAT MANUAL 2-WAY (DRIVER)

1.	9-C23	11.573	**COVER**, D/SEAT OTR ADJR UPR FRT FIN (BLACK)	93-97	F (AR9) (EXC AG1)	1	16723720
2.	9-B5	10.565	**RETAINER**, FRT S/D LK CYL ROD (D/SEAT) (PART OF 9) (YELLOW) (10.527)	93-97	F (AR9)	1	16633853
	9-B5	10.565	**RETAINER**, FRT S/D LK CYL ROD (D/SEAT) (PART OF 9) (YELLOW) (10.527)	93-97	F (AR9) (EXC AC3)	1	16633853
3.	9-C20	11.561	**ROD**, D/SEAT ADJR LAT (INR)	93-97	F	1	16620093
4.		8.900	**BOLT**, HWH, M8X1.25X40, SPL FULLTHD, AC PT, 10.9 PZOR (D/SEAT ADJR)	93-97		4	11515758
5.	9-C20	11.561	**CAP**, D/SEAT ADJR STUD (BLACK)	93-97	F (AR9)	4	16718899
6.		8.817	**NUT ASM**, CON TTH, M8X1.25 THD, 23.5 WA OD (D/SEAT ADJR)	93-97		4	20453625
7.	9-C20	11.561	**ADJUSTER**, D/SEAT OTR (INCLS 8) (2-WAY, DIPPED INTEGRAL TWIST HDL)	95-97	F87 (AG4, AR9)	1	16744320
8.	9-C26	11.588	**HANDLE**, D/SEAT ADJR (OTR/2-WAY MODE) (TWIST KNOB) (PART OF 7) (OTR/2-WAY ADJ, W/DIPPED INTEGRAL TWIST HDL)	93-97	F (AR9)	1	16738037

cardiagn.com

9.	9-C20	11.561	ADJUSTER, D/SEAT INR (INCLS 2)	95	F87 (AG4, AR9)	1	16731995
	9-C20	11.561	ADJUSTER, D/SEAT INR (INCLS 2)	96-97	F87 (AG4, AR9) (EXC VE1)	1	16731995
10.	9-C25	11.581	SPRING, D/SEAT ADJR RTN	93-97	F	1	16719194
11.	9-C23	11.573	RETAINER, D/SEAT ADJR FIN CVR (GRAPHITE) (.70 DIA. HD.) (ROUND HEAD) (15.222)	93-97	F	1	20732399

RPO DEFINITIONS

AC3 – ADJUSTER,SEAT,6-WAY POWER,BUCKET,DRIVER
AG1 – ADJUSTER,SEAT,6-WAY POWER,DRIVER(60-40)(VAR 2)
AG4 – ADJUSTER,MANUAL,2 WAY,VERT,DRIVER
AR9 – SEAT,FRONT BUCKET,DRIVER,PASSENGER,MANUAL RECLINING(EUROPEAN STYLE)
VE1 – PROVISION OPTIONS,JAPAN(EXPORT)

cardiagn.com

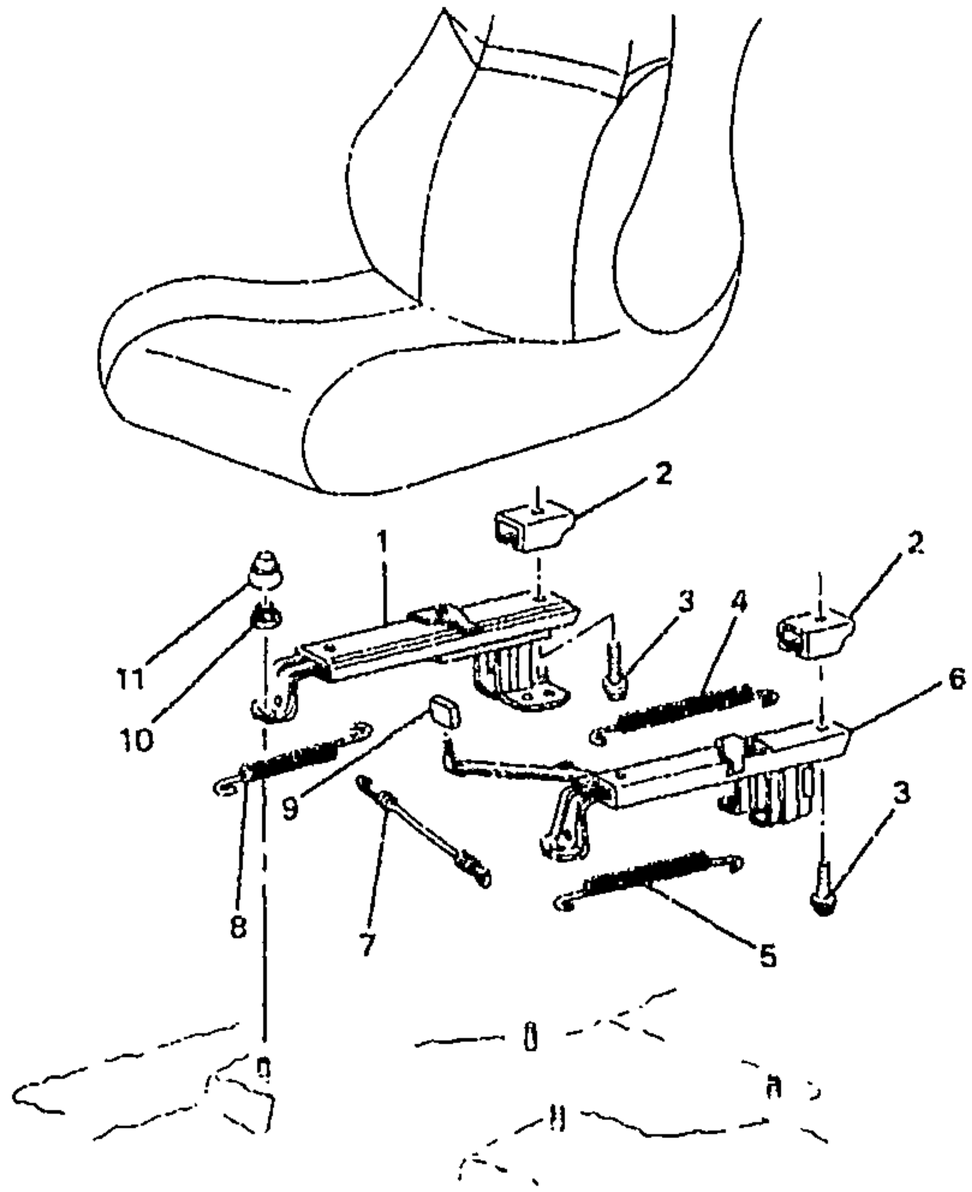

MF11-010

1993-2002 F ADJUSTER ASM/SEAT MANUAL 2-WAY (PASSENGER)(AR9)

1.	9-C20	11.561	ADJUSTER, P/SEAT OTR (INCLS 8) (W/ASST SPR) (WHEN REPLC ON VEH W/ASST SPR, BOTH INR & OTR ADJR MUST BE REPLCD)	93-02	F (AR9)	1	16747076
2.	9-C23	11.573	COVER, P/SEAT INR ADJR UPR FIN (BLACK)	93-02	F	2	20277469
3.		8.900	BOLT, HWH, M8X1.25X40, SPL FULLTHD, AC PT, 10.9 PZOR (P/SEAT ADJR)	93-02		4	11515758
4.	9-C25	11.581	SPRING, P/SEAT ADJR LAT (PART OF 6) (RED)	93-02	F	1	20351007
	9-C25	11.581	SPRING, P/SEAT ADJR LAT (PART OF 6) (GREEN)	93-02	F	1	16735159
5.	9-C25	11.581	SPRING, P/SEAT ADJR RTN (11.561)	93-02	F (AR9)	1	20314750
6.	9-C20	11.561	ADJUSTER, P/SEAT INR (INCLS 4, 9) (W/O ASST SPR) (WHEN REPLC ON VEH W/ASST SPR, BOTH INR & OTR ADJR MUST BE REPLCD)	93-02	F (AR9)	1	16747077
7.	9-C26	11.589	WIRE, P/SEAT ADJR LAT (234.0MM LG)	93-02	F	1	16738842
8.	9-C25	11.581	SPRING, P/SEAT ADJR LAT (PART OF 1) (RED)	93-02	F	1	20351007

cardiagn.com

	9–C25	11.581	**SPRING**, P/SEAT ADJR LAT (PART OF 1) (GREEN)	93–02	F	1	16735159
9.	9–C26	11.588	**KNOB**, P/SEAT ADJR HDL (PART OF 6) (BLACK)	93–02	F (AR9)	1	20524493
10.		8.917	**NUT ASM**, CON TTH, M8X1.25 THD, 23.5 WA OD (P/SEAT ADJR)	93–02	.....	4	20453625
11.	9–C20	11.561	**CAP**, P/SEAT ADJR STUD (BLACK)	93–02	F (AR9)	4	16718899

RPO DEFINITIONS
AR9 – SEAT,FRONT BUCKET,DRIVER,PASSENGER,MANUAL RECLINING(EUROPEAN STYLE)

cardiagn.com

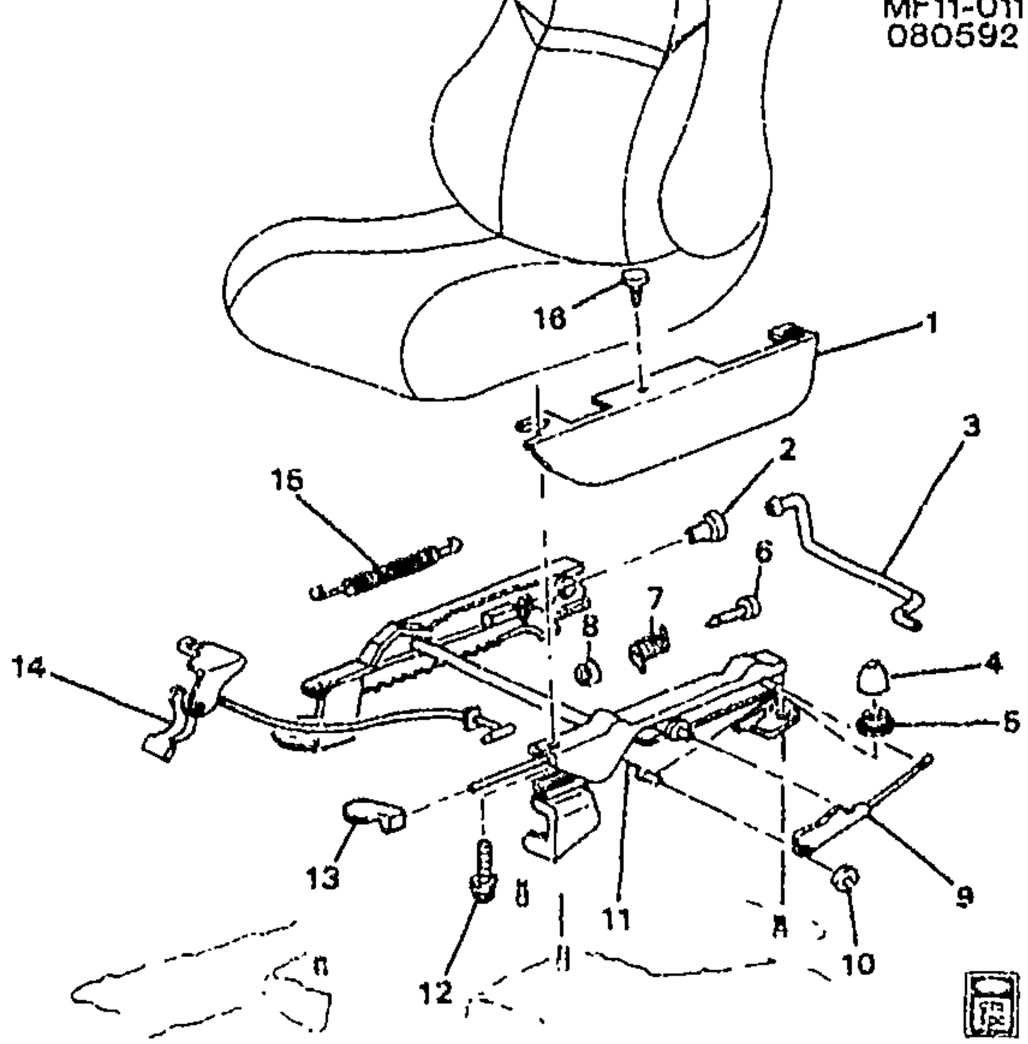

MF11-011

1993-2002 F ADJUSTER ASM/SEAT MANUAL 4-WAY(AH3)

1.	9-C23	11.573	**COVER**, D/SEAT OTR ADJR UPR FRT FIN (BLACK)	93-02	F (AR9) (EXC AG1)	1 16723720
2.	9-C20	11.561	**RETAINER**, D/SEAT ADJR LAT ROD (PART OF 11) (YELLOW) (10.527)	93-02	F	1 16633853
3.	9-C20	11.561	**ROD**, D/SEAT ADJR LAT (INR)	93-02	F	1 16620093
4.	9-C20	11.561	**CAP**, D/SEAT ADJR STUD (BLACK)	93-99	F (AR9)	4 16718899
	9-C20	11.561	**CAP**, D/SEAT ADJR STUD (BLACK)	00-02	F (AQ9, AR9)	4 16718899
5.		8.917	**NUT ASM**, CON TTH, M8X1.25 THD, 23.5 WA OD (D/SEAT ADJR)	93-02		4 20453625
6.		N.S.	**PIN**, D/SEAT ADJR LAT (PART OF 11)			
7.		N.S.	**SPRING**, D/SEAT ADJR LAT (PART OF 11)			
8.		8.921	**NUT**, PUSH ON, 7.51 ID, 1.8 THK, 16.03 OD, 1050 STL, PC, 8 STUD (ST ADJR LIFT BRKT) (PART OF 11)	93-02		1 11505213
9.	9-C20	11.561	**BRAKE**, D/SEAT ADJR VERT ACTR (PART OF 11) (11.556)	93-02	F (AR9)	1 16735154
10.		N.S.	**NUT**, D/SEAT ADJR ACTUATOR (PART OF 11)			
11.	9-C20	11.561	**ADJUSTER**, D/SEAT (INCLS 2, 6-10, 13, 14) (MAN) (DIPPED INTEGRAL TWIST HDL)	93-99	F (AH3, AR9)	1 16744321

cardiagn.com

	9-C20	11.561	**ADJUSTER**, D/SEAT (INCLS 2, 6-10, 13, 14) (MAN) (DIPPED INTEGRAL TWIST HDL)	00-02	F (AR9) (EXC AG1)	1	16744321
12.		8.900	**BOLT**, HWH, M8X1.25X40, SPL FULLTHD, AC PT, 10.9 PZOR (D/SEAT ADJR)	93-02	.. ..	4	11515758
13.	9-C26	11.588	**HANDLE**, D/SEAT ADJR (OTR/2-WAY MODE) (TWIST KNOB) (PART OF 11) (OTR/2-WAY ADJ, W/DIPPED INTEGRAL TWIST HDL)	93-02	F (AH3, AR9)	1	16738837
14.	9-C12	11.377	**HANDLE**, D/SEAT ADJR VERT ACTR (W/CABLE) (4-WAY MAN) (PART OF 11) (4-WAY) (W/CABLE) (11.588)	93-02	F (AH3, AR9)	1	16620090
15.	9-C25	11.581	**SPRING**, D/SEAT ADJR RTN	93-02	F (AR9)	1	16719194
16.	9-C23	11.573	**RETAINER**, D/SEAT ADJR FIN CVR (GRAPHITE) (.70 DIA. HD.) (ROUND HEAD) (15.222)	93-02	F	1	20732399

RPO DEFINITIONS

AG1 – ADJUSTER,SEAT,6-WAY POWER,DRIVER(60-40)(VAR 2)
AH3 – ADJUSTER,SEAT,4-WAY MANUAL,DRIVER
AQ9 – SEAT,FRONT BUCKET,DRIVER,PASSENGER,RECLINING
AR9 – SEAT,FRONT BUCKET,DRIVER,PASSENGER,MANUAL RECLINING(EUROPEAN STYLE)

cardiagn.com

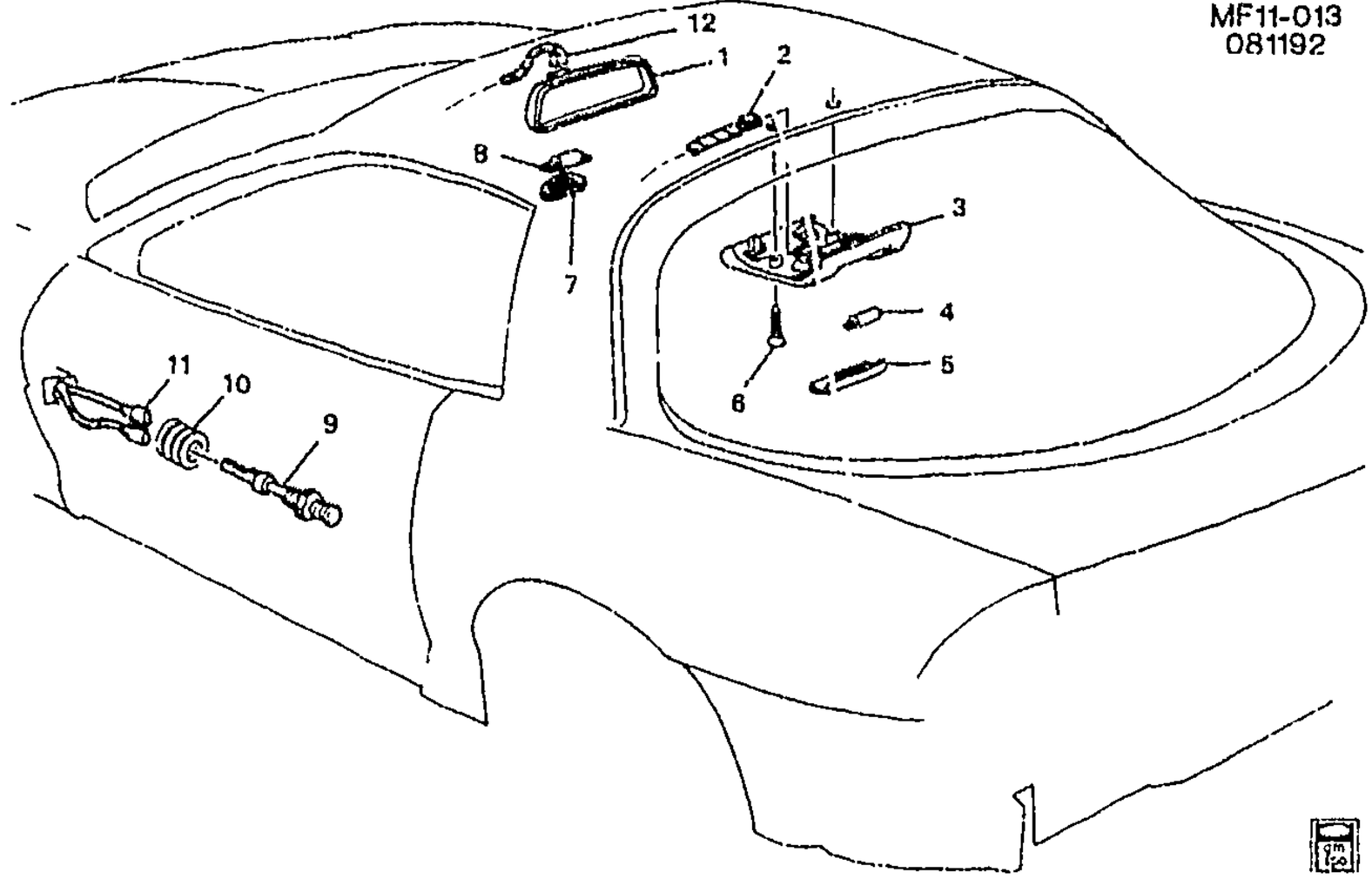

MF11–013

1993–2002 F87 LAMPS/INTERIOR

1.	9–A11	10.185	MIRROR, I/S RR VIEW (INCLS 7, 8) (BLACK)	94–00	F (EXC T2J)	1	10404249
	9–A11	10.185	MIRROR, I/S RR VIEW (INCLS 7, 8) (HAS A 7–PIN CONNECTOR. FOR 1ST DES SEE 10404249–50)	01	F (2ND DES)	1	10304121
	9–A11	10.185	MIRROR, I/S RR VIEW (INCLS 7, 8)	02	F	1	10304121
	9–A11	10.185	MIRROR, I/S RR VIEW (HAS 4–PIN CONNECTOR) (FOR 2ND DES SEE 10304121) (INCLS 7, 8) (BLACK)	01	F (EXC T2J) (1ST DES)	1	10404249
	9–A11	10.185	MIRROR, I/S RR VIEW (IF ONLY REPAIRING MIR SUPT, ORDER REPAIR KIT #12517104) (INCLS 7, 8) (INCLS BULBS)	93	F	1	10206750
	9–A11	10.185	MIRROR, I/S RR VIEW (IF ONLY REPAIRING MIR SUPT, ORDER REPAIR KIT #12517104) (INCLS 7, 8) (BLACK)	93	F	1	10404249
	9–A11	10.185	MIRROR, I/S RR VIEW (IF ONLY REPAIRING MIR SUPT, ORDER REPAIR KIT #12517104) (INCLS 7, 8)	93	F	1	10404250
	9–A11	10.185	MIRROR, I/S RR VIEW (INCLS 7, 8) (INCLS BULBS)	98–00	F (T2J) (EXPORT)	1	10206750
	9–A11	10.185	MIRROR, I/S RR VIEW (INCLS 7, 8)	98–00	F (T2J) (EXPORT)	1	10404250

cardiagn.com

	9-A11	10.185	**MIRROR**, I/S RR VIEW (INCLS 7, 8) (INCLS BULBS) (HAS 4-PIN CONNECTOR. FOR 2ND DES SEE 10304121)	01	F (T2J) (1ST DES) (EXPORT)	1	10206750
	9-A11	10.185	**MIRROR**, I/S RR VIEW (INCLS 7, 8) (HAS 4-PIN CONNECTOR. FOR 2ND DES SEE 10304121)	01	F (T2J) (1ST DES) (EXPORT)	1	10404250
	9-A11	10.185	**MIRROR**, I/S RR VIEW (INCLS 7, 8) (INCLS BULBS) (HAS 4-PIN CONNECTOR. FOR 2ND DES SEE 10304121)	02	F (T2J) (EXPORT)	1	10206750
2.	9-C26	11.927	**CONNECTOR**, LP-DM (GRAY) (2-WAY F W/LEADS) (INDEX TAB CTR CAVITY A&B) (2.535) (AC-DELCO #PT217)	93-02	F87	1	12101825
	9-C26	11.927	**CONNECTOR**, LP-DM (GRAY) (2-WAY F W/LEADS) (INDEX TAB CTR CAVITY A&B) (2.535) (AC-DELCO #PT217)	02	F	1	12101825
3.	9-C26	11.927	**HOUSING**, DM LP (INCLS 4, 5, 6) (GRAPHITE)	93	F87 (12I)	1	10230835
	9-C26	11.927	**HOUSING**, DM LP (INCLS 4, 5, 6) (BEIGE)	93-95	F87 (64I)	1	10230836
	9-C26	11.927	**HOUSING**, DM LP (INCLS 4, 5, 6) (GRAY)	93-95	F87 (14I)	1	10230837
	9-C26	11.927	**HOUSING**, DM LP (INCLS 4, 5, 6) (GRAPHITE)	94-95	F87 (12I, 73I)	1	10230835
	9-C26	11.927	**HOUSING**, DM LP (INCLS 4, 5, 6) (GRAPHITE)	96	F87 (12I, 14I, 73I)	1	10230835
	9-C26	11.927	**HOUSING**, DM LP (INCLS 4, 5, 6) (NEUTRAL)	96-02	F87 (52I)	1	10260032
	9-C26	11.927	**HOUSING**, DM LP (INCLS 4, 5, 6) (GRAY)	97-99	F87 (10I, 14I, 73I)	1	10281904
	9-C26	11.927	**HOUSING**, DM LP (INCLS 4, 5, 6) (PEWTER)	97	F87 (92I)	1	10284302
	9-C26	11.927	**HOUSING**, DM LP (INCLS 4, 5, 6) (PEWTER)	00-02	F87 (92I)	1	10284302
	9-C26	11.927	**HOUSING**, DM LP (INCLS 4, 5, 6) (GRAPHITE)	00-02	FP87 (19I)	1	10410259
4.		8.991	**BULB**, 12CP ID 561 (DM LP) (PART OF 3) (AC-DELCO #L561)	93-02	F87	1	9433040
5.	9-C27	11.928	**LENS**, DM LP (PART OF 3)	93-02	F87	1	10230838
6.	9-C26	11.927	**BOLT**, DM LP (PART OF 3) (M4.2X1.41X35) (8.977)	93-02	F87	2	11514957
7.		N.S.	**LENS**, C/LP (PART OF 1)				
8.		8.991	**BULB**, #214-2 12V 4CP (C/LP) (PART OF 1) (AC-DELCO #L214-2)	93-02		2	9437484
9.	9-C27	11.950	**SWITCH**, DR JAMB (NOT USED AFTER 1997) (AC-DELCO #D6030)	96-97	F	2	20589218
	9-C27	11.950	**SWITCH**, DR JAMB (DOUBLE POLE) (NOT USED AFTER 1997) (AC-DELCO #D6063)	93-95	F	LH	25603977
	9-C27	11.950	**SWITCH**, DR JAMB (SINGLE POLE) (NOT USED AFTER 1997) (AC-DELCO #D6030)	93-95	F	RH	20589218

cardiagn.com

							MFH-013
10.	9-C27	11.950	SEAL, DR JAMB SW (NOT USED AFTER 1997)	93-97	F	2	20057139
11.		N.S.	CONNECTOR, SW-DR JAMB ..		.....		
12.	9-C26	11.927	CONNECTOR, LP-RDG (4-WAY F W/LEADS) (2.535) (AC-DELCO #PT382)	93-02	F	1	12102900

RPO DEFINITIONS

T2J -- ORNAMENTATION,INTERIOR,EXPORT UNIQUE REQUIREMENTS(EXPORT)
10I -- INTERIOR TRIM- ARCTIC WHITE
12I -- INTERIOR TRIM GRAPHITE
14I -- INTERIOR TRIM LT GRAY
19I -- INTERIOR TRIM,BLACK
52I -- INTERIOR TRIM LIGHT NEUTRAL
64I -- INTERIOR TRIM,LIGHT BEIGE
73I -- INTERIOR TRIM,FLAME RED
92I -- INTERIOR TRIM SHALE/PEWTER

cardiagn.com

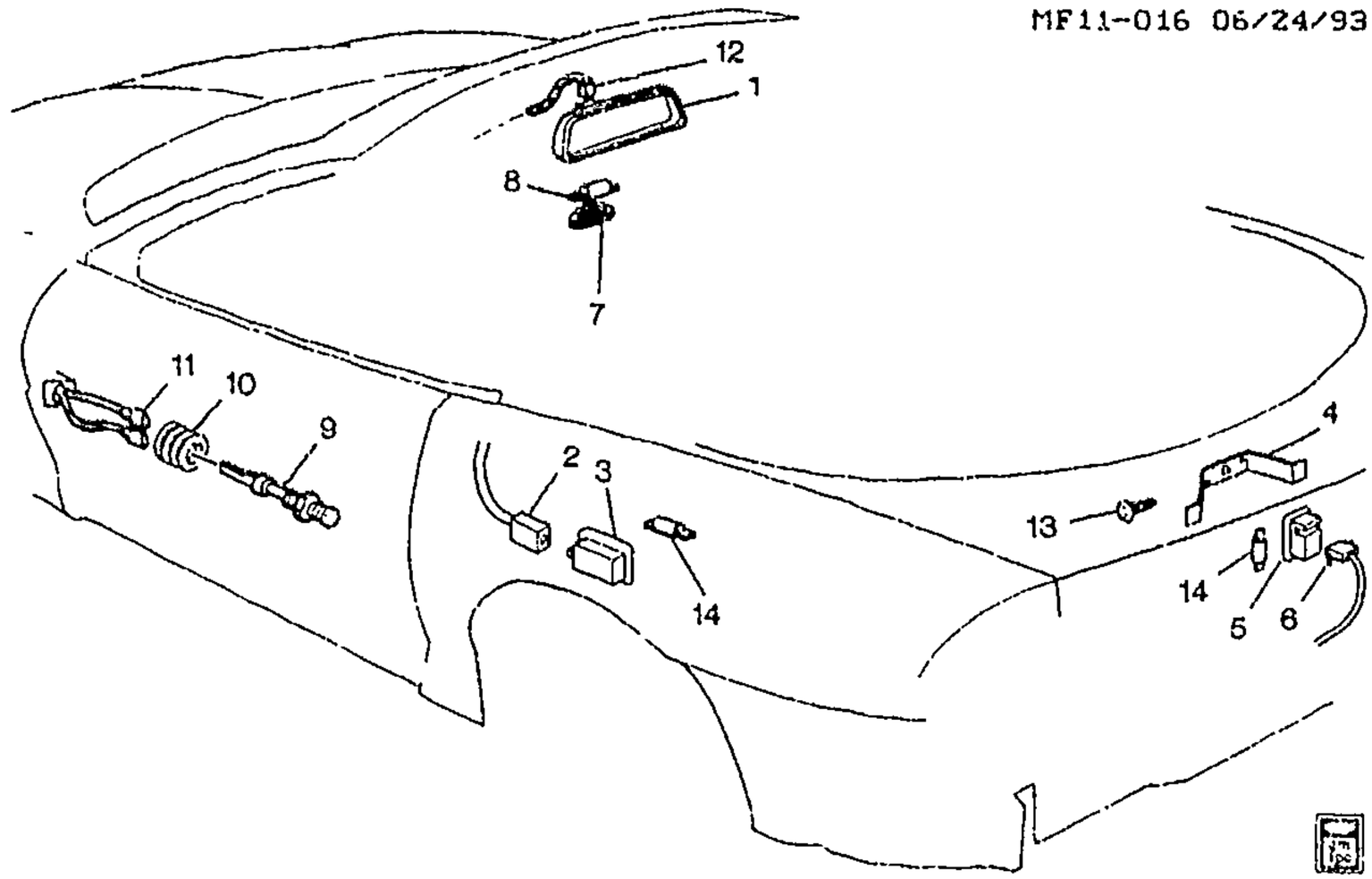

MF11-016

1994-2002 F67 LAMPS/INTERIOR

1.	9-A11	10.185	MIRROR, I/S RR VIEW (INCLS 7, 8) (BLACK)	94-00	F (EXC T2J)	1	10404249
	9-A11	10.185	MIRROR, I/S RR VIEW (INCLS 7, 8) (HAS A 7-PIN CONNECTOR. FOR 1ST DES SEE 10404249--50)	01	F (2ND DES)	1	10304121
	9-A11	10.185	MIRROR, I/S RR VIEW (INCLS 7, 8)	02	F	1	10304121
	9-A11	10.185	MIRROR, I/S RR VIEW (HAS 4-PIN CONNECTOR) (FOR 2ND DES SEE 10304121) (INCLS 7, 8) (BLACK)	01	F (EXC T2J) (1ST DES)	1	10404249
	9-A11	10.185	MIRROR, I/S RR VIEW (INCLS 7, 8) (INCLS BULBS)	98-00	F (T2J) (EXPORT)	1	10206750
	9-A11	10.185	MIRROR, I/S RR VIEW (INCLS 7, 8)	98-00	F (T2J) (EXPORT)	1	10404250
	9-A11	10.185	MIRROR, I/S RR VIEW (INCLS 7, 8) (INCLS BULBS) (HAS 4-PIN CONNECTOR. FOR 2ND DES SEE 10304121)	01	F (T2J) (1ST DES) (EXPORT)	1	10206750
	9-A11	10.185	MIRROR, I/S RR VIEW (INCLS 7, 8) (HAS 4-PIN CONNECTOR. FOR 2ND DES SEE 10304121)	01	F (T2J) (1ST DES) (EXPORT)	1	10404250
	9-A11	10.185	MIRROR, I/S RR VIEW (INCLS 7, 8) (INCLS BULBS) (HAS 4-PIN CONNECTOR. FOR 2ND DES SEE 10304121)	02	F (T2J) (EXPORT)	1	10206750
2.	9-C26	11.927	CONNECTOR, LP-CTSY (AT INT RR QTR TRIM PNL) (2-WAY F)	94-02	F67	2	12125650
3.	9-C26	11.927	LAMP, QTR CTSY (INCLS 14) (9.988)	94-02	F67	2	10253755

cardiagn.com

							MF11-016
4.	9-C26	11.927	SHIELD, C/LP LGT	94-02	F67	1	10237021
5.	9-N15	9.988	LAMP, R/CMPT CTSY (INCLS 14)	94-02	F67	2	10253755
	9-N15	9.988	LAMP, R/CMPT CTSY (INCLS 14) (12 CP BULB (9433040)	94-02	F67	1	3523031
6.	9-C26	11.927	CONNECTOR, LP-CTSY (AT INT RR QTR TRIM PNL) (R/CMPT) (2--WAY F)	94-02	F67	2	12125650
7.		N.S.	LENS, C/LP (PART OF 1)				
8.		8.991	BULB, #214-2 12V 4CP (C/LP) (PART OF 1) (AC-DELCO #L214-2)	94-02		2	9437484
9.	9-C27	11.950	SWITCH, DR JAMB (NOT USED AFTER 1997) (AC-DELCO #D6030)	96-97	F	2	20589218
	9-C27	11.950	SWITCH, DR JAMB (DOUBLE POLE) (NOT USED AFTER 1997) (AC-DELCO #D6063)	94-95	F	LH	25603977
	9-C27	11.950	SWITCH, DR JAMB (SINGLE POLE) (NOT USED AFTER 1997) (AC-DELCO #D6030)	94-95	F	RH	20589218
10.	9-C27	11.950	SEAL, DR JAMB SW (NOT USED AFTER 1997)	94-97	F	2	20057139
11.		N.S.	CONNECTOR, SW-DR JAMB				
12.	9-C26	11.927	CONNECTOR, LP-RDG (4-WAY F W/LEADS) (2.535) (AC-DELCO #PT382)	94-02	F	1	12102900
13.		8.950	RETAINER, FITS .250 HOLE, 1.01LG.700-OD NYLON BLACK (QTR CTSY)	94-02	F67	2	10121502
14.		8.991	BULB, 12CP ID 561 (C/LP) (PART OF 3, 5) (AC-DELCO #L561)	94-02	F67	3	9433040

RPO DEFINITIONS
T2J -- ORNAMENTATION,INTERIOR,EXPORT UNIQUE REQUIREMENTS/EXPORT)

cardiagn.com

CHEVROLET
BODY GROUP 12.000

ILLUSTRATION INDEX

	TITLE	GRID
1993–1997	F87 MOLDINGS/BODY	10–C4
1994–1997	F67 MOLDINGS/BODY	10–C8
1996–1997	F MOLDINGS/BODY ("RS")(Y3F)	10–C12
1998–2002	F87 MOLDINGS/BODY	10–C14
1998–2002	F67 MOLDINGS/BODY	10–C18
1998–2002	F MOLDINGS/BODY (Y3F)	10–C22
1998–2002	F MOLDINGS/BODY ("SS")(WU8)	10–C24
1993	F STRIPES/BODY (W/INDY PKG B5A)	10–C26
1997	F STRIPES/BODY (W/30TH ANNIV PKG Z4C)	10–D2
1994–2002	F67 COVER/TONNEAU	10–D4
1994–2002	F67 DECK LID HARDWARE	10–D6
1993–2002	F87 LIFTGATE HARDWARE	10–D10
1993	F87 SHEET METAL/BODY PART 4–UNDERBODY	10–D16
1993–2002	F SHEET METAL/BODY PART 1–ENGINE COMPARTMENT & DASH	10–D20
1993–2002	F87 SHEET METAL/BODY PART 2–DOOR & ROOF	10–D24
1993–2002	F87 SHEET METAL/BODY PART 3–RR QUARTER & LIFTGATE	10–E2
1994–2002	F67 SHEET METAL/BODY PART 2–DOOR & ROOF	10–E5
1994–2002	F67 SHEET METAL/BODY PART 3–RR QUARTER & DECKLID	10–E7
1994–2002	F87 SHEET METAL/BODY PART 4–UNDERBODY	10–E10
1994–2002	F67 SHEET METAL/BODY PART 4–UNDERBODY	10–E14
1993–2002	F87 ROOF HARDWARE/LIFT OFF PANELS (CC1)	10–E18

cardiagn.com

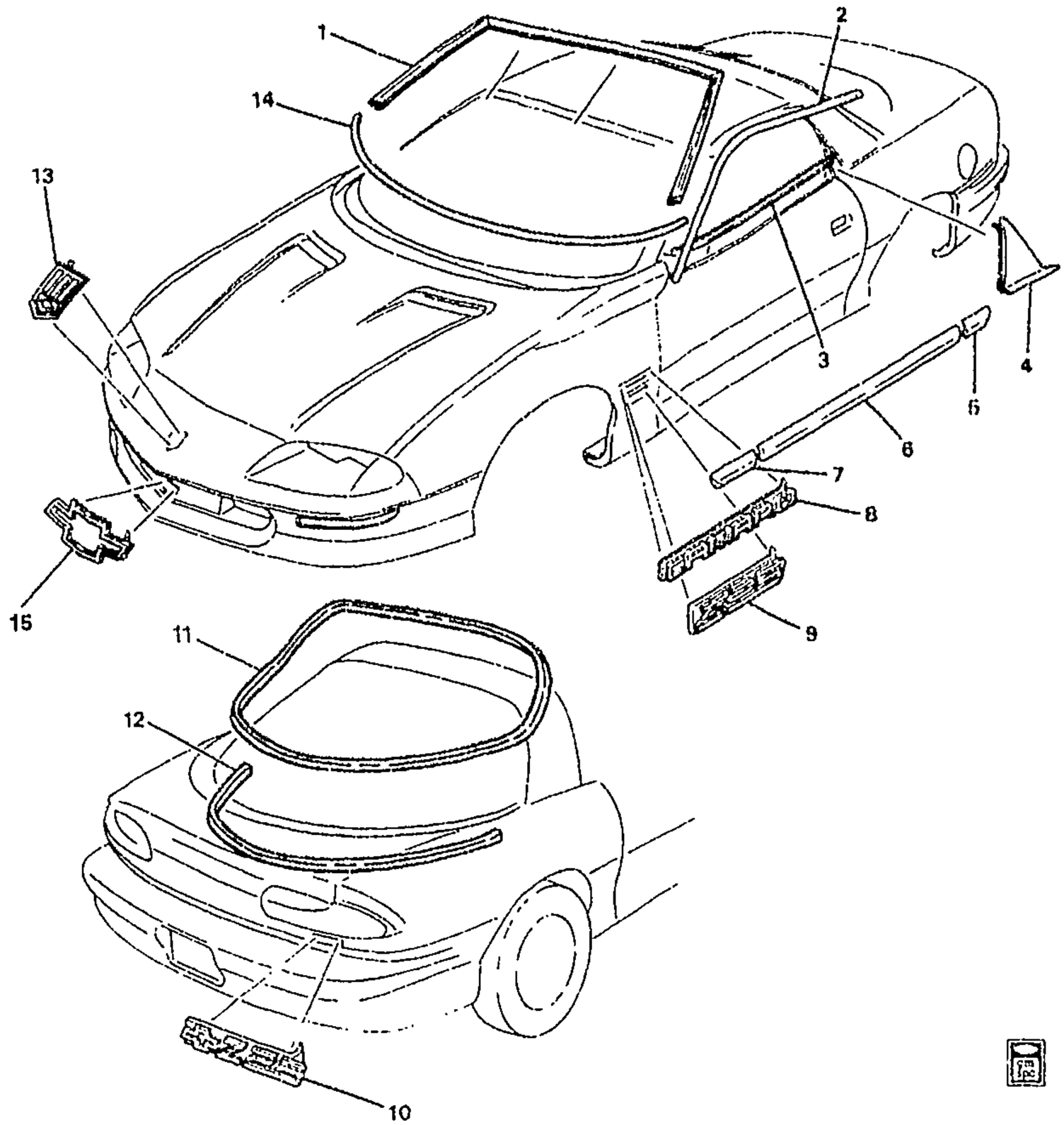

1F12–051

1993–1997 F87 MOLDINGS/BODY

1.	10–N17	10.093	MOLDING, W/S RVL (HIGH GLOSS)	93–97	F87 (EXC CC1)	1	10284786
	10–N17	10.093	MOLDING, W/S RVL (HIGH GLOSS)	93–97	F87 (CC1)	1	10293683
	10–N17	10.093	MOLDING, W/S RVL (LOW GLOSS)	93–97	F87 (EXC CC1)	1	10313065
	10–N17	10.093	MOLDING, W/S RVL (LOW GLOSS)	93–97	F87 (CC1)	1	10313067
2.	10–A8	12.075	MOLDING, RF DRIP SCP	93–97	F87 (EXC CC1)	RH	10156338
	10–A8	12.075	MOLDING, RF DRIP SCP	93–97	F87 (EXC CC1)	LH	10156339
3.	10–N21	10.710	SEALING STRIP, FRT S/D WDO OTR (CLIP PART OF ASM)	93–97	F	RH	10284222
	10–N21	10.710	SEALING STRIP, FRT S/D WDO OTR	93–97	F	LH	10284223
4.	10–A22	12.812	APPLIQUE, Q/PNL UPR	93–97	F87	RH	10240164

cardiagn.com

	10-A22	12.812	APPLIQUE, Q/PNL UPR	93-97	F87	LH	10240165
5.	10-A9	12.116	MOLDING, Q/PNL CTR (PURPLE)	93-94	F (B84, 91Q)	RH	10179160
	10-A9	12.116	MOLDING, Q/PNL CTR (PURPLE)	93-94	F (B84, 91Q)	LH	10179161
	10-A9	12.116	MOLDING, Q/PNL CTR (BLACK)	93-97	F (B84, 41Q)	RH	10179162
	10-A9	12.116	MOLDING, Q/PNL CTR (BLACK)	93-97	F (B84, 41Q)	LH	10179163
	10-A9	12.116	MOLDING, Q/PNL CTR (RED)	93-95	F (B84, 71Q)	RH	10179164
	10-A9	12.116	MOLDING, Q/PNL CTR (RED)	93-95	F (B84, 71Q)	LH	10179165
	10-A9	12.116	MOLDING, Q/PNL CTR (RED)	93-97	F (B84, 81Q)	RH	10179166
	10-A9	12.116	MOLDING, Q/PNL CTR (RED)	93-97	F (B84, 81Q)	LH	10179167
	10-A9	12.116	MOLDING, Q/PNL CTR (BLUE)	93-96	F (B84, 80Q)	RH	10179168
	10-A9	12.116	MOLDING, Q/PNL CTR (WHITE)	93-97	F (B84, 10Q)	RH	10256548
	10-A9	12.116	MOLDING, Q/PNL CTR (WHITE)	93-97	F (B84, 10Q)	LH	10256549
	10-A9	12.116	MOLDING, Q/PNL CTR (PAINT TO MATCH, REPLS ALL COLORS)	93-97	F	RH	88892068
	10-A9	12.116	MOLDING, Q/PNL CTR (PAINT TO MATCH, REPLS ALL COLORS)	93-97	F	LH	88892069
	10-A9	12.116	MOLDING, Q/PNL CTR (TEAL)	94-96	F (B84, 37Q)	RH	10228502
	10-A9	12.116	MOLDING, Q/PNL CTR (TEAL)	94-96	F (B84, 37Q)	LH	10228503
	10-A9	12.116	MOLDING, Q/PNL CTR (YELLOW GREEN)	94-97	F (B84, 48Q)	RH	10244260
	10-A9	12.116	MOLDING, Q/PNL CTR (YELLOW GREEN)	94-97	F (B84, 48Q)	LH	10244261
	10-A9	12.116	MOLDING, Q/PNL CTR (CYCLAMEN)	95-97	F (B84, 05Q)	RH	10251124
	10-A9	12.116	MOLDING, Q/PNL CTR (CYCLAMEN)	95-97	F (B84, 05Q)	LH	10251125
	10-A9	12.116	MOLDING, Q/PNL CTR (SILVER)	95-97	F (B84, 13Q)	RH	10251126
	10-A9	12.116	MOLDING, Q/PNL CTR (SILVER)	95-97	F (B84, 13Q)	LH	10251127
	10-A9	12.116	MOLDING, Q/PNL CTR (RED)	96-97	F (B84, 96U)	RH	10265970
	10-A9	12.116	MOLDING, Q/PNL CTR (TEAL)	96-97	F (B84, 79Q)	RH	10285863
	10-A9	12.116	MOLDING, Q/PNL CTR (TEAL)	96-97	F (B84, 79Q)	LH	10285864
	10-A9	12.116	MOLDING, Q/PNL CTR (GREEN)	97	F (B84, 31Q)	RH	10277583
6.	10-A8	12.112	MOLDING, FRT S/D CTR (GREEN GRAY)	93-94	F (B84, 18Q)	2	10179144
	10-A8	12.112	MOLDING, FRT S/D CTR (PURPLE)	93-94	F (B84, 91Q)	2	10179146
	10-A8	12.112	MOLDING, FRT S/D CTR (BLACK)	93-97	F (B84, 41Q)	2	10179148
	10-A8	12.112	MOLDING, FRT S/D CTR (RED)	93-95	F (B84, 71Q)	2	10179150
	10-A8	12.112	MOLDING, FRT S/D CTR (RED)	93-97	F (B84, 81Q)	2	10179152
	10-A8	12.112	MOLDING, FRT S/D CTR (BLUE)	93-96	F (B84, 80Q)	2	10179154
	10-A8	12.112	MOLDING, FRT S/D CTR (WHITE)	93-97	F (B84, 10Q)	2	10256546
	10-A8	12.112	MOLDING, FRT S/D CTR (PAINT TO MATCH)	93-97	F (B84)	2	88892065
	10-A8	12.112	MOLDING, FRT S/D CTR (TEAL)	94-96	F (B84, 37Q)	2	10228501
	10-A8	12.112	MOLDING, FRT S/D CTR (YELLOW GREEN)	94-97	F (B84, 48Q)	2	10244256
	10-A8	12.112	MOLDING, FRT S/D CTR (CYCLAMEN)	95-97	F (B84, 05Q)	2	10251112
	10-A8	12.112	MOLDING, FRT S/D CTR (SILVER)	95-97	F (B84, 13Q)	2	10251113
	10-A8	12.112	MOLDING, FRT S/D CTR (RED)	96-97	F (B84, 96Q)	2	10265949

cardiagn.com

	10-A8	12.112	MOLDING, FRT S/D CTR (GREEN)	97	F (B84, 31Q)	2	10277578
	10-A8	12.112	MOLDING, FRT S/D CTR (PURPLE)	97	F (B84, 88Q)	2	10277656
7.	10-N14	8.132	MOLDING, F/FDR CTR RR (GREEN GRAY)	93-94	F (B84, 18Q)	RH	10179172
	10-N14	8.132	MOLDING, F/FDR CTR RR (PURPLE)	93-94	F (B84, 91Q)	RH	10179174
	10-N14	8.132	MOLDING, F/FDR CTR RR (BLACK)	93-97	F (B84, 41Q)	RH	10179176
	10-N14	8.132	MOLDING, F/FDR CTR RR (BLACK)	93-97	F (B84, 41Q)	LH	10179177
	10-N14	8.132	MOLDING, F/FDR CTR RR (RED)	93-95	F (B84, 71Q)	RH	10179178
	10-N14	8.132	MOLDING, F/FDR CTR RR (RED)	93-95	F (B84, 71Q)	LH	10179179
	10-N14	8.132	MOLDING, F/FDR CTR RR (RED)	93-97	F (B84, 81Q)	RH	10179180
	10-N14	8.132	MOLDING, F/FDR CTR RR (RED)	93-97	F (B84, 81Q)	LH	10179181
	10-N14	8.132	MOLDING, F/FDR CTR RR (BLUE)	93-96	F (B84, 80Q)	RH	10179182
	10-N14	8.132	MOLDING, F/FDR CTR RR (BLUE)	93-96	F (B84, 80Q)	LH	10179183
	10-N14	8.132	MOLDING, F/FDR CTR RR (WHITE)	93-97	F (B84, 10Q)	RH	10256552
	10-N14	8.132	MOLDING, F/FDR CTR RR (WHITE)	93-97	F (B84, 10Q)	LH	10256553
	10-N14	8.132	MOLDING, F/FDR CTR RR (PAINT TO MATCH) (REPL ALL COLORS)	93-97	F	RH	88892066
	10-N14	8.132	MOLDING, F/FDR CTR RR (PAINT TO MATCH) (REPL ALL COLORS)	93-97	F (B84)	LH	88892067
	10-N14	8.132	MOLDING, F/FDR CTR RR (TEAL)	94-96	F (B84, 37Q)	RH	10228504
	10-N14	8.132	MOLDING, F/FDR CTR RR (TEAL)	94-96	F (B84, 37Q)	LH	10228505
	10-N14	8.132	MOLDING, F/FDR CTR RR (YELLOW GREEN)	94-97	F (B84, 48Q)	RH	10244274
	10-N14	8.132	MOLDING, F/FDR CTR RR (YELLOW GREEN)	94-97	F (B84, 48Q)	LH	10244275
	10-N14	8.132	MOLDING, F/FDR CTR RR (CYCLAMEN)	95-97	F (B84, 05Q)	RH	10251143
	10-N14	8.132	MOLDING, F/FDR CTR RR (CYCLAMEN)	95-97	F (B84, 05Q)	LH	10251144
	10-N14	8.132	MOLDING, F/FDR CTR RR (SILVER)	95-97	F (B84, 13Q)	RH	10251145
	10-N14	8.132	MOLDING, F/FDR CTR RR (SILVER)	95-97	F (B84, 13Q)	LH	10251146
	10-N14	8.132	MOLDING, F/FDR CTR RR (TEAL)	95	F (B84, 79Q)	LH	10251148
	10-N14	8.132	MOLDING, F/FDR CTR RR (RED)	96-97	F (B84, 96Q)	RH	10265978
	10-N14	8.132	MOLDING, F/FDR CTR RR (RED)	96-97	F (B84, 96Q)	LH	10265979
	10-N14	8.132	MOLDING, F/FDR CTR RR (TEAL)	96-97	F (B84, 79Q)	RH	10285867
	10-N14	8.132	MOLDING, F/FDR CTR RR (TEAL)	96-97	F (B84, 79Q)	LH	10285868
8.	10-N15	8.147	EMBLEM, F/FDR ("CAMARO") (NO LONGER USED AFTER 1994) (BLACK)	93-94	F (EXC Z28)	2	10139556

cardiagn.com

9.	10–N15	8.147	**EMBLEM**, F/FDR ("Z28") (BLACK)	93–97	F (Z28)	2	10139552
10.	10–A12	12.182	**EMBLEM**, R/END FIN PNL (BLACK/RED) (BOWTIE Z28)	93–97	F	RH	10154591
	10–A12	12.182	**EMBLEM**, R/END FIN PNL (RED/BLACK) (BOWTIE RS)	96–97	F	1	12530095
11.	10–A17	12.269	**WEATHERSTRIP**, R/CMPT L/WDO AUX	93–94	F87	1	12534759
	10–A17	12.269	**WEATHERSTRIP**, R/CMPT L/WDO AUX	95–97	F87	1	10294196
12.	10–A17	12.269	**WEATHERSTRIP**, R/CMPT L/WDO AUX	93–94	F87	1	12534759
	10–A17	12.269	**WEATHERSTRIP**, R/CMPT L/WDO AUX	95–97	F87	1	10294196
13.	10–N14	7.832	**EMBLEM**, FRT BPR FASCIA	93	F (EXC B5A)	1	10193494
	10–N14	7.832	**EMBLEM**, FRT BPR FASCIA	94–97	F	1	10193494
14.	10–N17	10.092	**SEALING STRIP**, W/S (FOAM TAPE) (223MM LONGER THAN 10130875)	93–97	F	1	10132029
15.	10–M27	1.303	**EMBLEM**, RAD GRL	93–96	F	1	10166783
	10–M27	1.303	**EMBLEM**, RAD GRL	97	F (EXC Z4C)	1	10166783

RPO DEFINITIONS

B5A – PACKAGE – "INDY COUPE"
B84 -- ORNAMENTATION,EXTERIOR,BODY SIDE MOLDING
CC1 – ROOF,HATCH,REMOVABLE PANELS,GLASS
Z28 – SPECIAL PERFORMANCE PACKAGE,(MERCHANDISING OPTION)
Z4C – APPEARANCE PACKAGE 30TH ANNIVERSARY
05Q – MOLDING COLOR CYCLAMEN (95)
10Q – MOLDING COLOR,ARCTIC WHITE
13Q – MOLDING COLOR,SILVER METALLIC
18Q – MOLDING COLOR,DK GREEN GRAY METALLIC
31Q – MOLDING COLOR BRIGHT GREEN MET (97)
37Q – MOLDING COLOR,DARK BRIGHT TEAL,MET
41Q – MOLDING COLOR,BLACK
48Q – MOLDING COLOR DK YELLOW GREEN MET (91)
71Q – MOLDING COLOR,RED
79Q – MOLDING COLOR – MYSTIC TEAL PEARL
80Q – MOLDING COLOR MED QUASAR BLUE MET (91)
81Q – MOLDING COLOR – BRIGHT RED
88Q – MOLDING COLOR BRIGHT PURPLE MET (97)
91Q – MOLDING COLOR,EXTERIOR,PURPLE PEARL
96Q – MOLDING COLOR CAYENNE RED MET
96U – PRIMARY COLOR– EXTERIOR,CAYENNE RED MET(95)

cardiagn.com

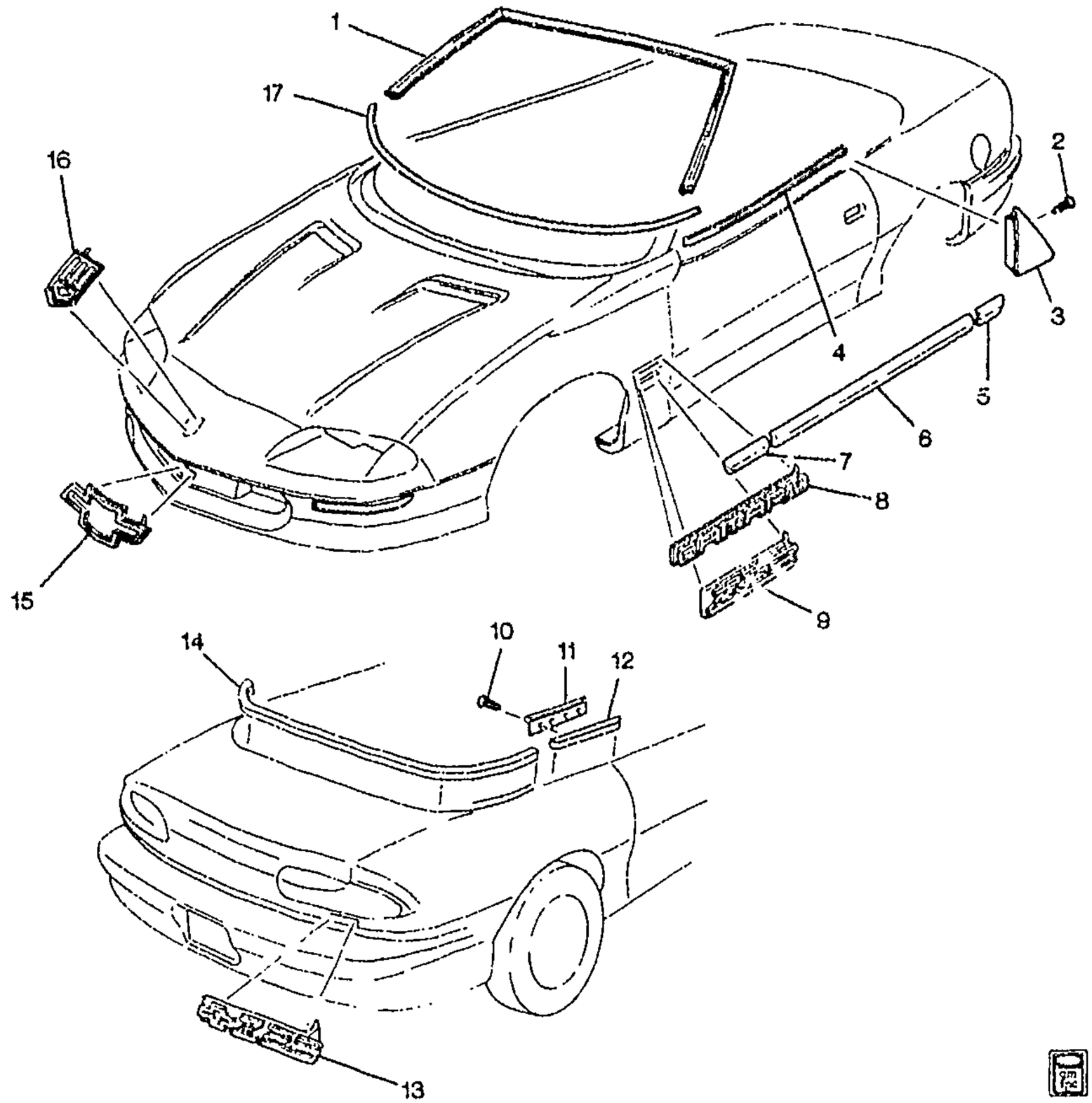

1F12-062

1994-1997 F67 MOLDINGS/BODY

1.	10-N17	10.093	MOLDING, W/S RVL (HIGH GLOSS)	94-97	F67	1	10284787
	10-N17	10.093	MOLDING, W/S RVL (LOW GLOSS)	94-97	F67	1	10313066
2.	10-N21	11.011	BOLT, F/TOP Q/WDO FIL (14.310)	94	F67	4	10224623
	10-N21	11.011	BOLT, F/TOP Q/WDO FIL (BLACK)	95-97	F67	4	10273792
3.	10-N21	11.011	FILLER, F/TOP Q/WDO	94-97	F67	RH	10286318
	10-N21	11.011	FILLER, F/TOP Q/WDO	94-97	F67	LH	10286319
4.	10-N21	10.710	SEALING STRIP, FRT S/D WDO OTR (CLIP PART OF ASM)	94-97	F	RH	10284222
	10-N21	10.710	SEALING STRIP, FRT S/D WDO OTR	94-97	F	LH	10284223
5.	10-A9	12.116	MOLDING, Q/PNL CTR (PURPLE)	94	F (B84, 91Q)	RH	10179160

cardiagn.com

	10–A9	12.116	MOLDING, Q/PNL CTR (PURPLE)	94	F (B84, 91Q)	LH	10179161
	10–A9	12.116	MOLDING, Q/PNL CTR (BLACK)	94–97	F (B84, 41Q)	RH	10179162
	10–A9	12.116	MOLDING, Q/PNL CTR (BLACK)	94–97	F (B84, 41Q)	LH	10179163
	10–A9	12.116	MOLDING, Q/PNL CTR (RED)	94–95	F (B84, 71Q)	RH	10179164
	10–A9	12.116	MOLDING, Q/PNL CTR (RED)	94–95	F (B84, 71Q)	LH	10179165
	10–A9	12.116	MOLDING, Q/PNL CTR (RED)	94–97	F (B84, 81Q)	RH	10179166
	10–A9	12.116	MOLDING, Q/PNL CTR (RED)	94–97	F (B84, 81Q)	LH	10179167
	10–A9	12.116	MOLDING, Q/PNL CTR (BLUE)	94–96	F (B84, 80Q)	RH	10179168
	10–A9	12.116	MOLDING, Q/PNL CTR (WHITE)	94–97	F (B84, 10Q)	RH	10256548
	10–A9	12.116	MOLDING, Q/PNL CTR (WHITE)	94–97	F (B84, 10Q)	LH	10256549
	10–A9	12.116	MOLDING, Q/PNL CTR (PAINT TO MATCH, REPLS ALL COLORS)	94–97	F	RH	88892068
	10–A9	12.116	MOLDING, Q/PNL CTR (PAINT TO MATCH, REPLS ALL COLORS)	94–97	F	LH	88892069
	10–A9	12.116	MOLDING, Q/PNL CTR (TEAL)	94–96	F (B84, 37Q)	RH	10228502
	10–A9	12.116	MOLDING, Q/PNL CTR (TEAL)	94–96	F (B84, 37Q)	LH	10228503
	10–A9	12.116	MOLDING, Q/PNL CTR (YELLOW GREEN)	94–97	F (B84, 48Q)	RH	10244260
	10–A9	12.116	MOLDING, Q/PNL CTR (YELLOW GREEN)	94–97	F (B84, 48Q)	LH	10244261
	10–A9	12.116	MOLDING, Q/PNL CTR (CYCLAMEN)	95–97	F (B84, 05Q)	RH	10251124
	10–A9	12.116	MOLDING, Q/PNL CTR (CYCLAMEN)	95–97	F (B84, 05Q)	LH	10251125
	10–A9	12.116	MOLDING, Q/PNL CTR (SILVER)	95–97	F (B84, 13Q)	RH	10251126
	10–A9	12.116	MOLDING, Q/PNL CTR (SILVER)	95–97	F (B84, 13Q)	LH	10251127
	10–A9	12.116	MOLDING, Q/PNL CTR (RED)	96–97	F (B84, 96U)	RH	10265970
	10–A9	12.116	MOLDING, Q/PNL CTR (TEAL)	96–97	F (B84, 79Q)	RH	10285863
	10–A9	12.116	MOLDING, Q/PNL CTR (TEAL)	96–97	F (B84, 79Q)	LH	10285864
	10–A9	12.116	MOLDING, Q/PNL CTR (GREEN)	97	F (B84, 31Q)	RH	10277583
6.	10–A8	12.112	MOLDING, FRT S/D CTR (GREEN GRAY)	94	F (B84, 18Q)	2	10179144
	10–A8	12.112	MOLDING, FRT S/D CTR (PURPLE)	94	F (B84, 91Q)	2	10179146
	10–A8	12.112	MOLDING, FRT S/D CTR (BLACK)	94–97	F (B84, 41Q)	2	10179148
	10–A8	12.112	MOLDING, FRT S/D CTR (RED)	94–95	F (B84, 71Q)	2	10179150
	10–A8	12.112	MOLDING, FRT S/D CTR (RED)	94–97	F (B84, 81Q)	2	10179152
	10–A8	12.112	MOLDING, FRT S/D CTR (BLUE)	94–96	F (B84, 80Q)	2	10179154
	10–A8	12.112	MOLDING, FRT S/D CTR (WHITE)	94–97	F (B84, 10Q)	2	10256546
	10–A8	12.112	MOLDING, FRT S/D CTR (PAINT TO MATCH)	94–97	F (B84)	2	88892065
	10–A8	12.112	MOLDING, FRT S/D CTR (TEAL)	94–96	F (B84, 37Q)	2	10228501
	10–A8	12.112	MOLDING, FRT S/D CTR (YELLOW GREEN)	94–97	F (B84, 48Q)	2	10244256
	10–A8	12.112	MOLDING, FRT S/D CTR (CYCLAMEN)	95–97	F (B84, 05Q)	2	10251112
	10–A8	12.112	MOLDING, FRT S/D CTR (SILVER)	95–97	F (B84, 13Q)	2	10251113
	10–A8	12.112	MOLDING, FRT S/D CTR (RED)	96–97	F (B84, 96Q)	2	10265949
	10–A8	12.112	MOLDING, FRT S/D CTR (TEAL)	96–97	F (B84, 79Q)	2	10285859
	10–A8	12.112	MOLDING, FRT S/D CTR (GREEN)	97	F (B84, 31Q)	2	10277578

cardiagn.com

	10–A8	12.112	**MOLDING**, FRT S/D CTR (PURPLE)	97	F (B84, 88Q)	2	10277056
7.	10–N14	8.132	**MOLDING**, F/FDR CTR RR (GREEN GRAY)	94	F (B84, 18Q)	RH	10179172
	10–N14	8.132	**MOLDING**, F/FDR CTR RR (PURPLE)	94	F (B84, 91Q)	RH	10179174
	10–N14	8.132	**MOLDING**, F/FDR CTR RR (BLACK)	94–97	F (B84, 41Q)	RH	10179176
	10–N14	8.132	**MOLDING**, F/FDR CTR RR (BLACK)	94–97	F (B84, 41Q)	LH	10179177
	10–N14	8.132	**MOLDING**, F/FDR CTR RR (RED)	94–95	F (B84, 71Q)	RH	10179178
	10–N14	8.132	**MOLDING**, F/FDR CTR RR (RED)	94–95	F (B84, 71Q)	LH	10179179
	10–N14	8.132	**MOLDING**, F/FDR CTR RR (RED)	94–97	F (B84, 81Q)	RH	10179180
	10–N14	8.132	**MOLDING**, F/FDR CTR RR (RED)	94–97	F (B84, 81Q)	LH	10179181
	10–N14	8.132	**MOLDING**, F/FDR CTR RR (BLUE)	94–96	F (B84, 80Q)	RH	10179182
	10–N14	8.132	**MOLDING**, F/FDR CTR RR (BLUE)	94–96	F (B84, 80Q)	LH	10179183
	10–N14	8.132	**MOLDING**, F/FDR CTR RR (WHITE)	94–97	F (B84, 10Q)	RH	10256552
	10–N14	8.132	**MOLDING**, F/FDR CTR RR (WHITE)	94–97	F (B84, 10Q)	LH	10256553
	10–N14	8.132	**MOLDING**, F/FDR CTR RR (PAINT TO MATCH) (REPL ALL COLORS)	94–97	F	RH	88892066
	10–N14	8.132	**MOLDING**, F/FDR CTR RR (PAINT TO MATCH) (REPL ALL COLORS)	94–97	F (B84)	LH	88892067
	10–N14	8.132	**MOLDING**, F/FDR CTR RR (TEAL)	94–96	F (B84, 37Q)	RH	10228504
	10–N14	8.132	**MOLDING**, F/FDR CTR RR (TEAL)	94–96	F (B84, 37Q)	LH	10228505
	10–N14	8.132	**MOLDING**, F/FDR CTR RR (YELLOW GREEN)	94–97	F (B84, 48Q)	RH	10244274
	10–N14	8.132	**MOLDING**, F/FDR CTR RR (YELLOW GREEN)	94–97	F (B84, 48Q)	LH	10244275
	10–N14	8.132	**MOLDING**, F/FDR CTR RR (CYCLAMEN)	95–97	F (B84, 05Q)	RH	10251143
	10–N14	8.132	**MOLDING**, F/FDR CTR RR (CYCLAMEN)	95–97	F (B84, 05Q)	LH	10251144
	10–N14	8.132	**MOLDING**, F/FDR CTR RR (SILVER)	95–97	F (B84, 13Q)	RH	10251145
	10–N14	8.132	**MOLDING**, F/FDR CTR RR (SILVER)	95–97	F (B84, 13Q)	LH	10251146
	10–N14	8.132	**MOLDING**, F/FDR CTR RR (TEAL)	95	F (B84, 79Q)	LH	10251148
	10–N14	8.132	**MOLDING**, F/FDR CTR RR (RED)	96–97	F (B84, 96Q)	RH	10265978
	10–N14	8.132	**MOLDING**, F/FDR CTR RR (RED)	96–97	F (B84, 96Q)	LH	10265979
	10–N14	8.132	**MOLDING**, F/FDR CTR RR (TEAL)	96–97	F (B84, 79Q)	RH	10285867
	10–N14	8.132	**MOLDING**, F/FDR CTR RR (TEAL)	96–97	F (B84, 79Q)	LH	10285868
8.	10–N15	8.147	**EMBLEM**, F/FDR ("CAMARO") (NO LONGER USED AFTER 1994) (BLACK)	94	F (EXC Z28)	2	10139556
9.	10–N15	8.147	**EMBLEM**, F/FDR ("RS")	96–97	F (Y3F)	2	12529243
	10–N15	8.147	**EMBLEM**, F/FDR ("Z28") (BLACK)	94–97	F (Z28)	2	10139552

cardiagn.com

							1F12-062
10.		8.977	**SCREW**, PAN HD TORX W/FL WA TAP M6.3X 1.81X20 SS BLK 17 OD (QTR BELT R/MLDG)	94-97	.....	8	11508762
11.	10-A10	12.118	**SEAL**, Q/PNL BELT R/MLDG	94-97	F67	RH	10261609
	10-A10	12.118	**SEAL**, Q/PNL BELT R/MLDG	94-97	F67	LH	10261610
12.	10-A9	12.116	**MOLDING**, Q/PNL BELT RVL	94-97	F67	RH	10243370
	10-A9	12.116	**MOLDING**, Q/PNL BELT RVL	94-97	F67	LH	10243371
13.	10-A12	12.182	**EMBLEM**, R/END FIN PNL (BLACK/RED) (BOWTIE Z28)	94-97	F	RH	10154591
	10-A12	12.182	**EMBLEM**, R/END FIN PNL (RED/BLACK) (BOWTIE RS)	96-97	F	1	12530095
14.	10-A26	12.971	**WEATHERSTRIP**, R/CMPT LID FRT AUX	94-97	F67	1	10415695
15.	10-M27	1.303	**EMBLEM**, RAD GRL	94-96	F	1	10166783
	10-M27	1.303	**EMBLEM**, PAD GRL	97	F (EXC Z4C)	1	10166783
	10-M27	1.303	**EMBLEM**, RAD GRL (RED EMBLEM ON WHITE BACKGROUND)	97	F (Z4C)	1	10290781
16.	10-N14	7.832	**EMBLEM**, FRT BPR FASCIA	94-97	F	1	10193494
17.	10-N17	10.092	**SEALING STRIP**, W/S (FOAM TAPE) (223MM LONGER THAN 10130875)	94-97	F	1	10132029

RPO DEFINITIONS

B84 – ORNAMENTATION,EXTERIOR,BODY SIDE MOLDING
Y3F – SALES PACKAGE RS CAMARO UPFITTER
Z28 – SPECIAL PERFORMANCE PACKAGE,(MERCHANDISING OPTION)
Z4C – APPEARANCE PACKAGE 30TH ANNIVERSARY
05Q – MOLDING COLOR CYCLAMEN (95)
10Q – MOLDING COLOR,ARCTIC WHITE
13Q – MOLDING COLOR,SILVER METALLIC
18Q – MOLDING COLOR,DK GREEN GRAY METALLIC
31Q – MOLDING COLOR BRIGHT GREEN MET (97)
37Q – MOLDING COLOR,DARK BRIGHT TEAL,MET
41Q – MOLDING COLOR,BLACK
48Q – MOLDING COLOR DK YELLOW GREEN MET (91)
71Q – MOLDING COLOR,RED
79Q – MOLDING COLOR – MYSTIC TEAL PEARL
80Q – MOLDING COLOR MED QUASAR BLUE MET (91)
81Q – MOLDING COLOR – BRIGHT RED
88Q – MOLDING COLOR BRIGHT PURPLE MET (97)
91Q – MOLDING COLOR,EXTERIOR,PURPLE PEARL
96Q – MOLDING COLOR CAYENNE RED MET
96U – PRIMARY COLOR– EXTERIOR,CAYENNE RED MET(95)

cardiagn.com

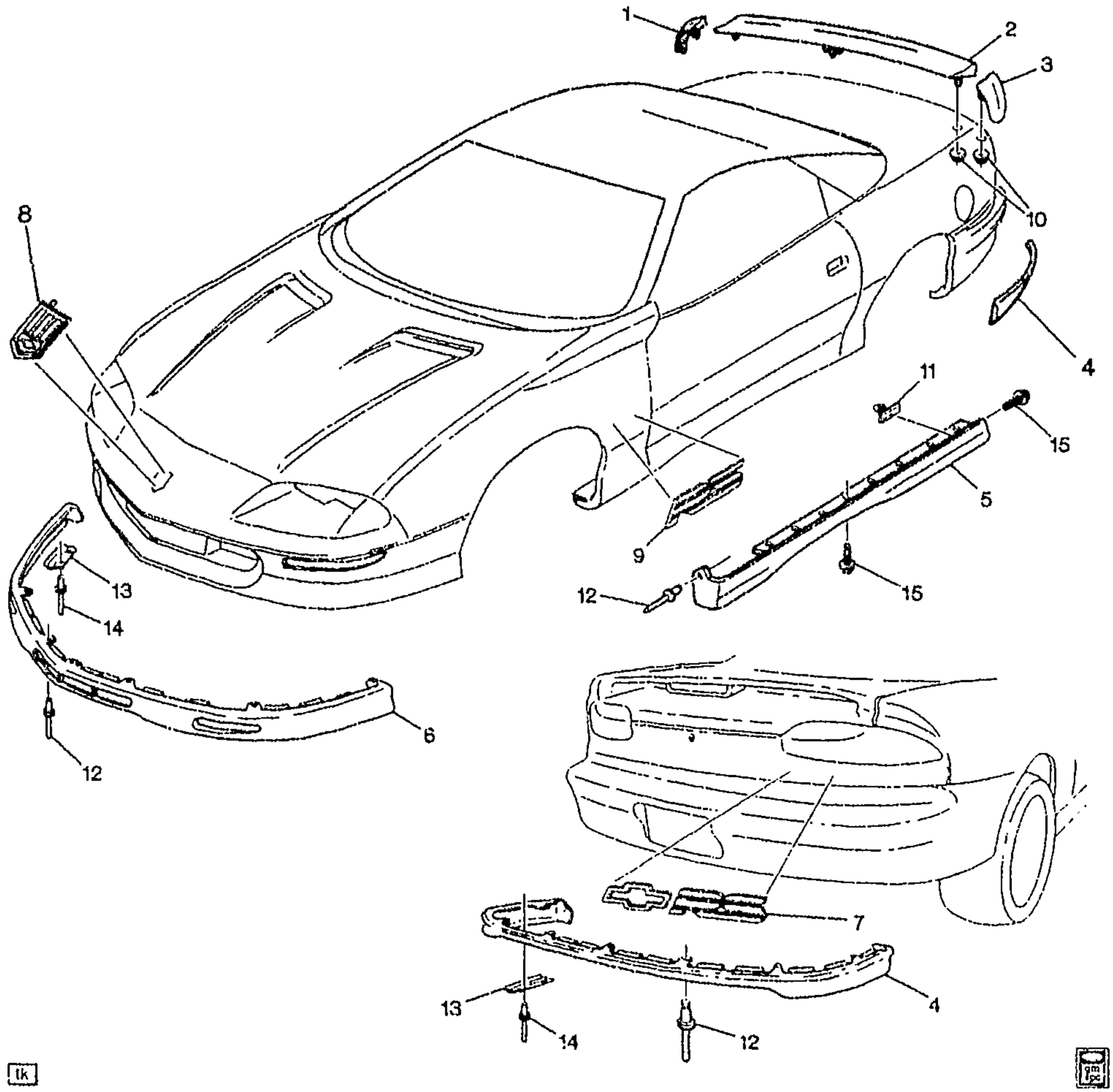

1F12-063

1996-1997 F MOLDINGS/BODY ("RS")(Y3F)

1.	10-A11	12.181	EXTENSION KIT, R/END SPLR (INCLS 10)	96-97	F (Y3F)	RH	12531224
2.	10-A11	12.181	SPOILER KIT, R/END (INCLS 10) (INCLS SPLR, NUTS, BOLT ONLY)	96-97	F (Y3F)	1	12531222
3.	10-A11	12.181	EXTENSION KIT, R/END SPLR (INCLS 10)	96-97	F (Y3F)	LH	12531223
4.	10-N14	7.832	MOLDING KIT, RR BPR FASCIA	96-97	F (Y3F)	1	12530102
5.	10-N16	8.304	MOLDING KIT, RKR PNL	96-97	F (Y3F)	LH	12530100

cardiagn.com

6.	10–N14	7.833	**PANEL KIT**, FRT BPR VAL (LOWER) (PAINT TO MATCH) (1.263)	96–97	F (Y3F)	1	12530101
	10–M27	1.269	**TEMPLATE**, F/END FASCIA MLDG ATCH	96–97	F (Y3F)	1	12530096
7.	10–A12	12.182	**EMBLEM**, R/END FIN PNL (BLACK/RED) (BOWTIE Z28)	96–97	F	RH	10154591
	10–A12	12.182	**EMBLEM**, R/END FIN PNL (RED/BLACK) (BOWTIE RS)	96–97	F	1	12530095
8.	10–N14	7.832	**EMBLEM**, FRT BPR FASCIA	96–97	F	1	10193494
9.	10–N15	8.147	**EMBLEM**, F/FDR ("RS")	96–97	F (Y3F)	2	12529243
10.		8.921	**NUT**, STAMPED FITS 6.3 STUD–TYPE B SELF THD STL PC (PART OF 1–3)	96–97		11	11502553
11.	10–N16	8.309	**RETAINER**, RKR PNL MLDG	96–97	F (Y3F)	16	12531209
12.	10–N13	7.831	**RIVET**, FRT BPR FASCIA REINF (PLASTIC)	96–97	F (Y3F)	26	10184895
13.	10–M27	1.303	**RETAINER**, F/END FASCIA MLDG (1.269)	96–97	F (Y3F)	28	12531210
14.	10–N13	7.831	**RIVET**, FRT BPR FASCIA REINF (PLASTIC)	96–97	F (Y3F)	69	10184895
15.	10–N16	8.309	**BOLT**, RKR PNL MLDG	96–97	F	14	25543139

RPO DEFINITIONS
Y3F – SALES PACKAGE RS CAMARO UPFITTER

cardiagn.com

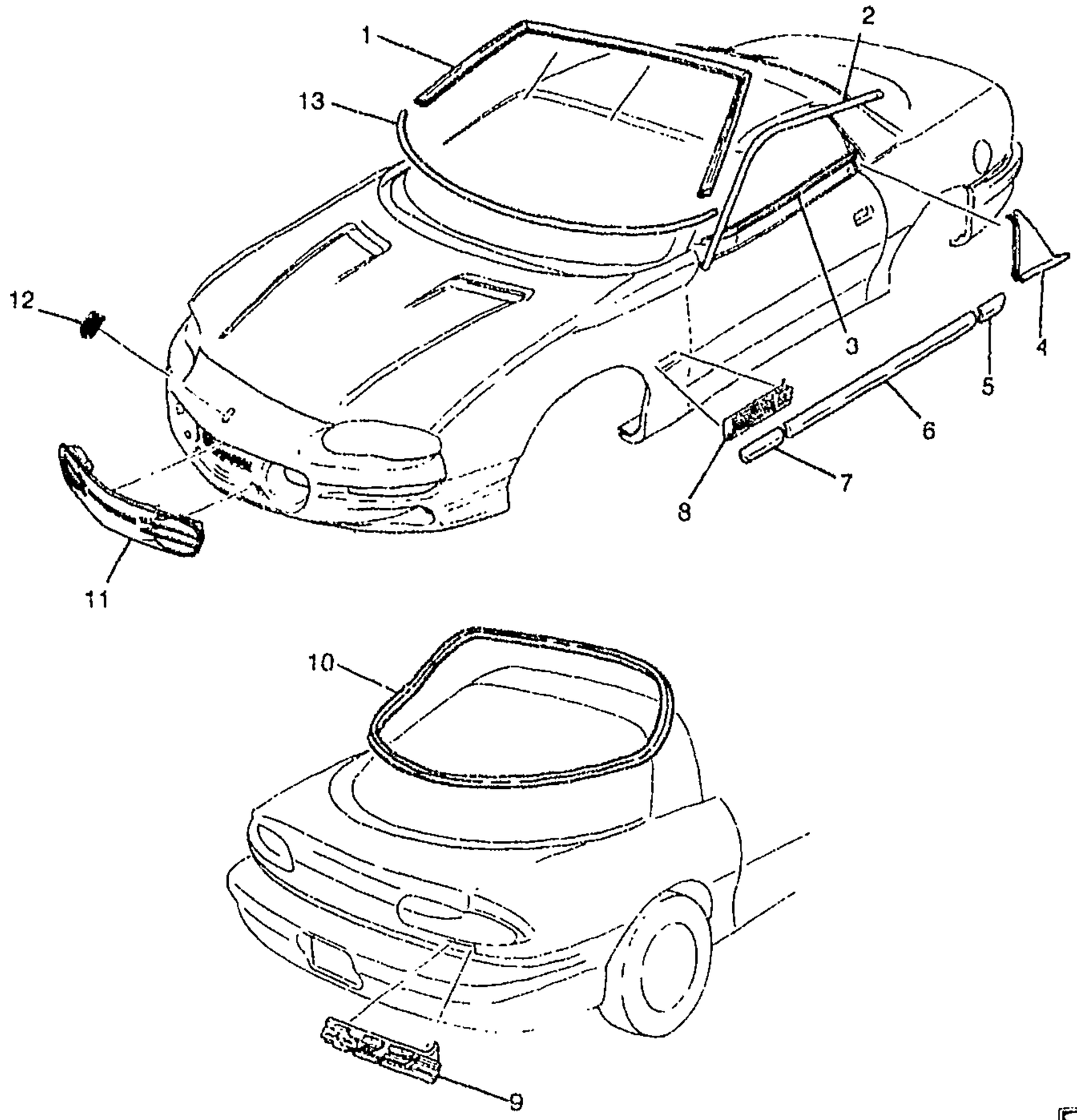

1F12-052

1998-2002 F87 MOLDINGS/BODY

1.	10-N17	10.093	MOLDING, W/S RVL (HIGH GLOSS)	98-00	F87 (EXC CC1)	1	10284786
	10-N17	10.093	MOLDING, W/S RVL (LOW GLOSS)	98-00	F87 (EXC CC1)	1	10313065
	10-N17	10.093	MOLDING, W/S RVL (HIGH GLOSS)	98-00	F87 (CC1)	1	10293683
	10-N17	10.093	MOLDING, W/S RVL (LOW GLOSS)	98-00	F87 (CC1)	1	10313067

cardiagn.com

	10–N17	10.093	MOLDING, W/S RVL (HIGH GLOSS) (1ST DES IS HIGH GLOSS, SEE 10313065 FOR 2ND DES.)	01	F87 (EXC CC1) (1ST DES)	1	10284786
	10–N17	10.093	MOLDING, W/S RVL (HIGH GLOSS) (1ST DES IS HIGH GLOSS, FOR 2ND DES SEE 10313067.)	01	F87 (CC1) (1ST DES)	1	10293683
	10–N17	10.093	MOLDING, W/S RVL (LOW GLOSS) (FOR 1ST DES SEE 10284786)	01	F87 (EXC CC1) (2ND DES)	1	10313065
	10–N17	10.093	MOLDING, W/S RVL (LOW GLOSS) (FOR 1ST DES SEE 10293683)	01	F87 (CC1) (2ND DES)	1	10313067
	10–N17	10.093	MOLDING, W/S RVL (LOW GLOSS)	02	F87 (EXC CC1)	1	10313065
	10–N17	10.093	MOLDING, W/S RVL (LOW GLOSS)	02	F87 (CC1)	1	10313067
2.	10–A8	12.075	MOLDING, RF DRIP SCP	98–02	F87 (EXC CC1)	RH	10156338
	10–A8	12.075	MOLDING, RF DRIP SCP	98–02	F87 (EXC CC1)	LH	10156339
3.	10–N21	10.710	SEALING STRIP, FRT S/D WDO OTR (CLIP PART OF ASM)	98–02	F	RH	10284222
	10–N21	10.710	SEALING STRIP, FRT S/D WDO OTR	98–02	F	LH	10284223
4.	10–A22	12.812	APPLIQUE, Q/PNL UPR	98–02	F87	RH	10240164
	10–A22	12.812	APPLIQUE, Q/PNL UPR	98–02	F87	LH	10240165
5.	10–A9	12.116	MOLDING, Q/PNL CTR (BLACK)	98–02	F (B84, 41Q)	RH	10179162
	10–A9	12.116	MOLDING, Q/PNL CTR (BLACK)	98–02	F (B84, 41Q)	LH	10179163
	10–A9	12.116	MOLDING, Q/PNL CTR (RED)	98–02	F (B84, 81Q)	RH	10179166
	10–A9	12.116	MOLDING, Q/PNL CTR (RED)	98–02	F (B84, 81Q)	LH	10179167
	10–A9	12.116	MOLDING, Q/PNL CTR (WHITE)	98–02	F (B84, 10Q)	RH	10256548
	10–A9	12.116	MOLDING, Q/PNL CTR (WHITE)	98–02	F (B84, 10Q)	LH	10256549
	10–A9	12.116	MOLDING, Q/PNL CTR (PAINT TO MATCH, REPLS ALL COLORS)	98–02	F	RH	88892068
	10–A9	12.116	MOLDING, Q/PNL CTR (PAINT TO MATCH, REPLS ALL COLORS)	98–02	F	LH	88892069
	10–A9	12.116	MOLDING, Q/PNL CTR (SILVER)	98–02	F (B84, 13Q)	RH	10251126
	10–A9	12.116	MOLDING, Q/PNL CTR (SILVER)	98–02	F (B84, 13Q)	LH	10251127
	10–A9	12.116	MOLDING, Q/PNL CTR (RED)	98	F (B84, 96U)	RH	10265970
	10–A9	12.116	MOLDING, Q/PNL CTR (TEAL)	98–01	F (B84, 79Q)	RH	10285863
	10–A9	12.116	MOLDING, Q/PNL CTR (TEAL)	98–01	F (B84, 79Q)	LH	10285864
	10–A9	12.116	MOLDING, Q/PNL CTR (GREEN)	98–99	F (B84, 31Q)	RH	10277583
	10–A9	12.116	MOLDING, Q/PNL CTR (SAPPHIRE)	98–02	F (B84, 28Q)	RH	10285732
	10–A9	12.116	MOLDING, Q/PNL CTR (SAPPHIRE)	98–02	F (B84, 28Q)	LH	10285733
	10–A9	12.116	MOLDING, Q/PNL CTR (PEWTER)	98–02	F (B84, 11Q)	RH	10400710
	10–A9	12.116	MOLDING, Q/PNL CTR (PEWTER)	98–02	F (B84, 11Q)	LH	10400711
	10–A9	12.116	MOLDING, Q/PNL CTR (BLUE)	99–00	F (B84, 20Q)	LH	10296467
	10–A9	12.116	MOLDING, Q/PNL CTR (ORANGE)	00–02	F (B84, 71Q)	RH	10426721
	10–A9	12.116	MOLDING, Q/PNL CTR (ORANGE)	00–02	F (B84, 71Q)	LH	10426722

cardiagn.com

6.	10–A8	12.112	MOLDING, FRT S/D CTR (BLACK)	98–02	F (B84, 41Q)	2	10179148
	10–A8	12.112	MOLDING, FRT S/D CTR (RED)	98–02	F (B84, 81Q)	2	10179152
	10–A8	12.112	MOLDING, FRT S/D CTR (WHITE)	98–02	F (B84, 10Q)	2	10256546
	10–A8	12.112	MOLDING, FRT S/D CTR (PAINT TO MATCH)	98–02	F (B84)	2	88892065
	10–A8	12.112	MOLDING, FRT S/D CTR (SILVER)	98–02	F (B84, 13Q)	2	10251113
	10–A8	12.112	MOLDING, FRT S/D CTR (RED)	98	F (B84, 96Q)	2	10265949
	10–A8	12.112	MOLDING, FRT S/D CTR (TEAL)	98–02	F (B84, 79Q)	2	10285859
	10–A8	12.112	MOLDING, FRT S/D CTR (GREEN)	98–99	F (B84, 31Q)	2	10277578
	10–A8	12.112	MOLDING, FRT S/D CTR (PURPLE)	98	F (B84, 88Q)	2	10277656
	10–A8	12.112	MOLDING, FRT S/D CTR (SAPPHIRE)	98–02	F (B84, 28Q)	2	10285488
	10–A8	12.112	MOLDING, FRT S/D CTR (PEWTER)	98–02	F (B84, 11Q)	2	10400686
	10–A8	12.112	MOLDING, FRT S/D CTR (BLUE)	99–02	F (B84, 20Q)	2	10296394
	10–A8	12.112	MOLDING, FRT S/D CTR (ORANGE)	99	F (B84, 99Q)	2	10296396
	10–A8	12.112	MOLDING, FRT S/D CTR (RED)	99–02	F (B84, 44Q)	2	10413015
	10–A8	12.112	MOLDING, FRT S/D CTR (ORANGE)	00	F (B84)	2	10296396
	10–A8	12.112	MOLDING, FRT S/D CTR (ORANGE)	00–02	F (B84, 71Q)	2	10426725
7.	10–N14	8.132	MOLDING, F/FDR CTR RR (BLACK)	98–02	F (B84, 41Q)	RH	10179176
	10–N14	8.132	MOLDING, F/FDR CTR RR (BLACK)	98–02	F (B84, 41Q)	LH	10179177
	10–N14	8.132	MOLDING, F/FDR CTR RR (RED)	98–02	F (B84, 81Q)	RH	10179180
	10–N14	8.132	MOLDING, F/FDR CTR RR (RED)	98–02	F (B84, 81Q)	LH	10179181
	10–N14	8.132	MOLDING, F/FDR CTR RR (WHITE)	98–02	F (B84, 10Q)	RH	10256552
	10–N14	8.132	MOLDING, F/FDR CTR RR (WHITE)	98–02	F (B84, 10Q)	LH	10256553
	10–N14	8.132	MOLDING, F/FDR CTR RR (PAINT TO MATCH) (REPL ALL COLORS)	98–02	F	RH	88892066
	10–N14	8.132	MOLDING, F/FDR CTR RR (PAINT TO MATCH) (REPL ALL COLORS)	98–02	F (B84)	LH	88892067
	10–N14	8.132	MOLDING, F/FDR CTR RR (SILVER)	98–02	F (B84, 13Q)	RH	10251145
	10–N14	8.132	MOLDING, F/FDR CTR RR (SILVER)	98–02	F (B84, 13Q)	LH	10251146
	10–N14	8.132	MOLDING, F/FDR CTR RR (RED)	98	F (B84, 96Q)	RH	10265978
	10–N14	8.132	MOLDING, F/FDR CTR RR (RED)	98	F (B84, 96Q)	LH	10265979
	10–N14	8.132	MOLDING, F/FDR CTR RR (TEAL)	98–01	F (B84, 79Q)	RH	10285867
	10–N14	8.132	MOLDING, F/FDR CTR RR (TEAL)	98–01	F (B84, 79Q)	LH	10285868
	10–N14	8.132	MOLDING, F/FDR CTR RR (SAPPHIRE)	98–02	F (B84, 28Q)	RH	10285882
	10–N14	8.132	MOLDING, F/FDR CTR RR (SAPPHIRE)	98–02	F (B84, 28Q)	LH	10285883

cardiagn.com

	10-N14	8.132	**MOLDING**, F/FDR CTR RR (PEWTER)	98-02	F (B84, 11Q)	RH	10400715
	10-N14	8.132	**MOLDING**, F/FDR CTR RR (PEWTER)	98-02	F (B84, 11Q)	LH	10400716
	10-N14	8.132	**MOLDING**, F/FDR CTR RR (RED)	99-02	F (B84, 44Q)	RH	10413020
	10-N14	8.132	**MOLDING**, F/FDR CTR RR (RED)	99-02	F (B84, 44Q)	LH	10413021
	10-N14	8.132	**MOLDING**, F/FDR CTR RR (ORANGE)	00-02	F (B84, 71Q)	RH	10426730
	10-N14	8.132	**MOLDING**, F/FDR CTR RR (ORANGE)	00-02	F (B84, 71Q)	LH	10426731
8.	10-N15	8.147	**EMBLEM**, F/FDR	02	FP87-87 (Z4C)	2	10307879
	10-N15	8.147	**EMBLEM**, F/FDR ("Z28") (BLACK)	98-02	F (Z28)	2	10139552
9.	10-A12	12.182	**EMBLEM**, R/END FIN PNL (BLACK/RED) (BOWTIE Z28)	98-02	F	RH	10154591
	10-A12	12.182	**EMBLEM**, R/END FIN PNL (RED/BLACK) (BOWTIE RS)	98-02	F	1	12530095
	10-A12	12.182	**EMBLEM**, R/END FIN PNL (RED, USED ONLY ON BLACK VEHICLES) (SS)	98-02	F	1	12369965
	10-A12	12.182	**EMBLEM**, R/END FIN PNL (SILVER, USED ON ALL COLORS EXCEPT BLACK) (SS)	98-02	F	1	12369966
10.	10-A17	12.269	**WEATHERSTRIP**, R/CMPT L/WDO AUX	98-00	F87	1	10294196
	10-A17	12.269	**WEATHERSTRIP**, R/CMPT L/WDO AUX	02	F87	1	10306248
	10-A17	12.269	**WEATHERSTRIP**, R/CMPT L/WDO AUX (HIGH GLOSS. SEE P/N 10306248 FOR 2ND DES.)	01	F87 (1ST DES)	1	10433037
	10-A17	12.269	**WEATHERSTRIP**, R/CMPT L/WDO AUX (LOW GLOSS. SEE P/N 10294196 FOR 1ST DES.)	01	F87 (2ND DES)	1	10306248
11.	10-M27	1.266	**GRILLE**, RAD ("CAMARO")	98-02	F	1	10280356
12.	10-N14	7.832	**EMBLEM**, FRT BPR FASCIA	98-02	F	1	10193494
13.	10-N17	10.092	**SEALING STRIP**, W/S (FOAM TAPE) (223MM LONGER THAN 10130875)	98-02	F	1	10132029

RPO DEFINITIONS

B84 – ORNAMENTATION,EXTERIOR,BODY SIDE MOLDING
CC1 – ROOF,HATCH,REMOVABLE PANELS,GLASS
Z28 – SPECIAL PERFORMANCE PACKAGE,(MERCHANDISING OPTION)
Z4C – APPEARANCE PACKAGE 35TH ANNIVERSARY
10Q – MOLDING COLOR,ARCTIC WHITE
11Q – MOLDING COLOR,WHITE
13Q – MOLDING COLOR,SILVER METALLIC
20Q – MOLDING COLOR LT QUASAR BLUE MET (91)
28Q – MOLDING COLOR,BLACK SAPPHIRE METALLIC
31Q – MOLDING COLOR BRIGHT GREEN MET (97)
41Q – MOLDING COLOR,BLACK
44Q – MOLDING COLOR EXTERIOR,MED RED METALLIC(00)
71Q – MOLDING COLOR,SUNSET ORANGE METALLIC(01)
79Q – MOLDING COLOR – MYSTIC TEAL PEARL
81Q – MOLDING COLOR – BRIGHT RED
88Q – MOLDING COLOR BRIGHT PURPLE MET (97)
96Q – MOLDING COLOR CAYENNE RED MET
96U – PRIMARY COLOR– EXTERIOR,CAYENNE RED MET(95)
99Q – MOLDING COLOR,DARK SLATE METALLIC

cardiagn.com

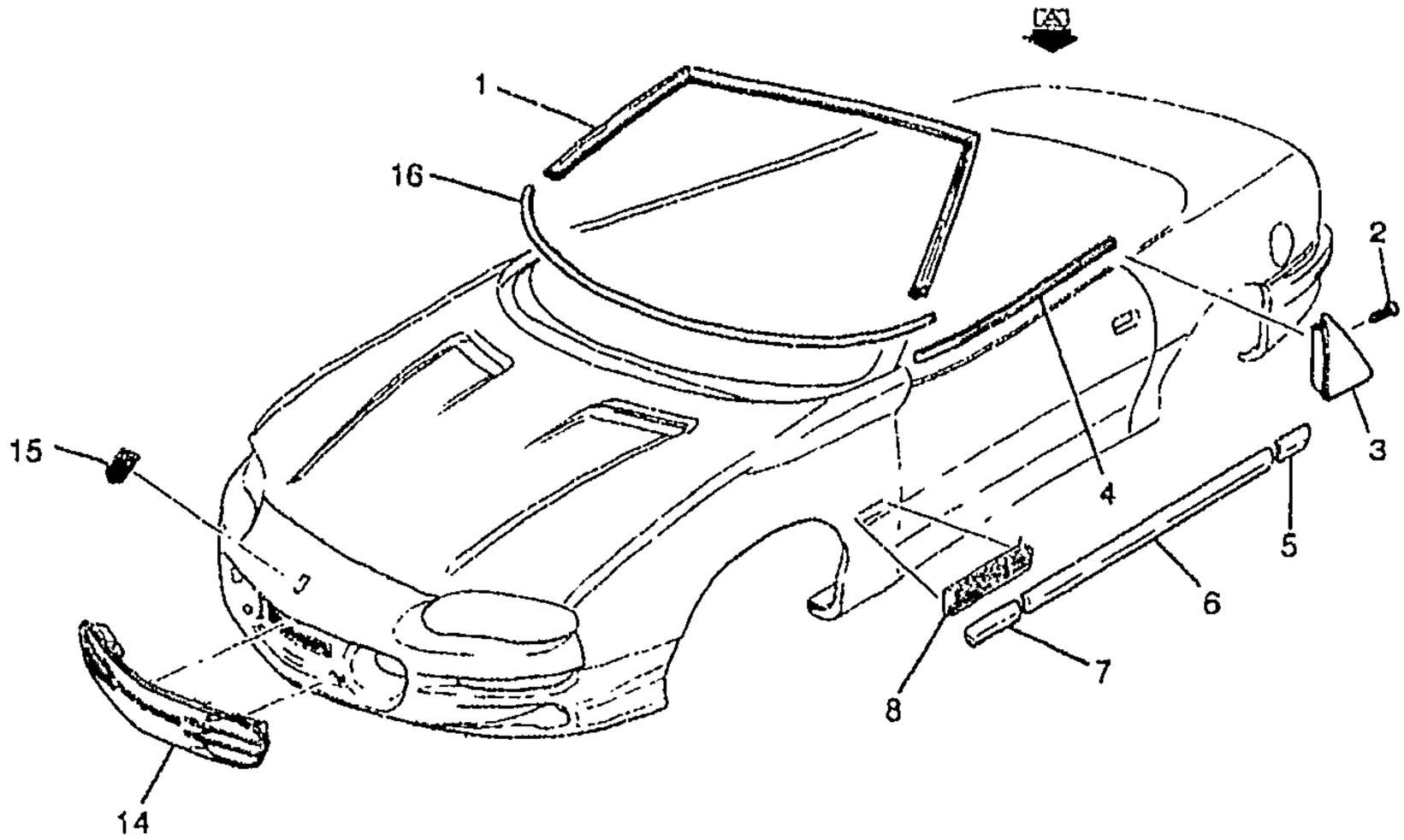

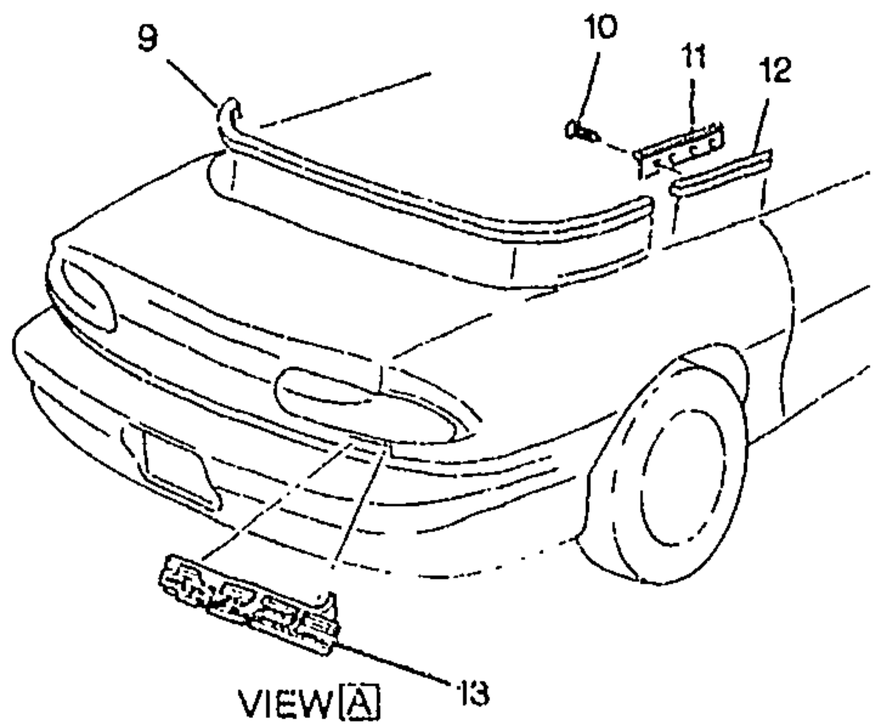

1F12-054

1998-2002 F67 MOLDINGS/BODY

1.	10-N17	10.093	MOLDING, W/S RVL (HIGH GLOSS)	98-00	F67	1	10284787
	10-N17	10.093	MOLDING, W/S RVL (LOW GLOSS)	98-00	F67	1	10313066
	10-N17	10.093	MOLDING, W/S RVL (HIGH GLOSS) (1ST DES IS HIGH GLOSS, FOR 2ND DES SEE 10313066.)	01	F67 (1ST DES)	1	10284787
	10-N17	10.093	MOLDING, W/S RVL (LOW GLOSS) (FOR 1ST DES SEE 10284787)	01	F67 (2ND DES)	1	10313066

cardiagn.com

	10–A8	12.112	MOLDING, FRT S/D CTR (SAPPHIRE)	98–02	F (B84, 28Q)	2	10285488
	10–A8	12.112	MOLDING, FRT S/D CTR (PEWTER)	98–02	F (B84, 11Q)	2	10400686
	10–A8	12.112	MOLDING, FRT S/D CTR (BLUE)	99–02	F (B84, 20Q)	2	10296394
	10–A8	12.112	MOLDING, FRT S/D CTR (ORANGE)	99	F (B84, 99Q)	2	10296396
	10–A8	12.112	MOLDING, FRT S/D CTR (RED)	99–02	F (B84, 44Q)	2	10413015
	10–A8	12.112	MOLDING, FRT S/D CTR (ORANGE)	00	F (B84)	2	10296396
	10–A8	12.112	MOLDING, FRT S/D CTR (ORANGE)	00–02	F (B84, 71Q)	2	10426725
7.	10–N14	8.132	MOLDING, F/FDR CTR RR (BLACK)	98–02	F (B84, 41Q)	RH	10179176
	10–N14	8.132	MOLDING, F/FDR CTR RR (BLACK)	98–02	F (B84, 41Q)	LH	10179177
	10–N14	8.132	MOLDING, F/FDR CTR RR (RED)	98–02	F (B84, 81Q)	RH	10179180
	10–N14	8.132	MOLDING, F/FDR CTR RR (RED)	98–02	F (B84, 81Q)	LH	10179181
	10–N14	8.132	MOLDING, F/FDR CTR RR (WHITE)	98–02	F (B84, 10Q)	RH	10256552
	10–N14	8.132	MOLDING, F/FDR CTR RR (WHITE)	98–02	F (B84, 10Q)	LH	10256553
	10–N14	8.132	MOLDING, F/FDR CTR RR (PAINT TO MATCH) (REPL ALL COLORS)	98–02	F	RH	88892066
	10–N14	8.132	MOLDING, F/FDR CTR RR (PAINT TO MATCH) (REPL ALL COLORS)	98–02	F (B84)	LH	88892067
	10–N14	8.132	MOLDING, F/FDR CTR RR (SILVER)	98–02	F (B84, 13Q)	RH	10251145
	10–N14	8.132	MOLDING, F/FDR CTR RR (SILVER)	98–02	F (B84, 13Q)	LH	10251146
	10–N14	8.132	MOLDING, F/FDR CTR RR (RED)	98	F (B84, 96Q)	RH	10265978
	10–N14	8.132	MOLDING, F/FDR CTR RR (RED)	98	F (B84, 96Q)	LH	10265979
	10–N14	8.132	MOLDING, F/FDR CTR RR (TEAL)	98–01	F (B84, 79Q)	RH	10285867
	10–N14	8.132	MOLDING, F/FDR CTR RR (TEAL)	98–01	F (B84, 79Q)	LH	10285868
	10–N14	8.132	MOLDING, F/FDR CTR RR (SAPPHIRE)	98–02	F (B84, 28Q)	RH	10285882
	10–N14	8.132	MOLDING, F/FDR CTR RR (SAPPHIRE)	98–02	F (B84, 28Q)	LH	10285883
	10–N14	8.132	MOLDING, F/FDR CTR RR (PEWTER)	98–02	F (B84, 11Q)	RH	10400715
	10–N14	8.132	MOLDING, F/FDR CTR RR (PEWTER)	98–02	F (B84, 11Q)	LH	10400716
	10–N14	8.132	MOLDING, F/FDR CTR RR (RED)	99–02	F (B84, 44Q)	RH	10413020
	10–N14	8.132	MOLDING, F/FDR CTR RR (RED)	99–02	F (B84, 44Q)	LH	10413021
	10–N14	8.132	MOLDING, F/FDR CTR RR (ORANGE)	00–02	F (B84, 71Q)	RH	10426730
	10–N14	8.132	MOLDING, F/FDR CTR RR (ORANGE)	00–02	F (B84, 71Q)	LH	10426731
8.	10–N15	8.147	EMBLEM, F/FDR	02	FP67–87 (Z4C)	2	10307879
	10–N15	8.147	EMBLEM, F/FDR ("Z28") (BLACK)	98–02	F (Z28)	2	10139552
9.	10–A26	12.971	WEATHERSTRIP, R/CMPT LID FRT AUX	98–02	F67	1	10415695

cardiagn.com

10.		8.977	SCREW, PAN HD TORX W/FL WA TAP M6.3X 1.81X20 SS BLK 17 OD (Q/PNL BELT R/MLDG)	98-02	.....	AR	11508762
11.	10-A10	12.118	SEAL, Q/PNL BELT R/MLDG	98-02	F67	RH	10261609
	10-A10	12.118	SEAL, Q/PNL BELT R/MLDG	98-02	F67	LH	10261610
12.	10-A9	12.116	MOLDING, Q/PNL BELT RVL	98-02	F67	RH	10243370
	10-A9	12.116	MOLDING, Q/PNL BELT RVL	98-02	F67	LH	10243371
13.	10-A12	12.182	EMBLEM, R/END FIN PNL (BLACK/RED) (BOWTIE Z28)	98-02	F	RH	10154591
	10-A12	12.182	EMBLEM, R/END FIN PNL (RED/BLACK) (BOWTIE RS)	98-02	F	1	12530095
	10-A12	12.182	EMBLEM, R/END FIN PNL (RED, USED ONLY ON BLACK VEHICLES) (SS)	98-02	F	1	12369965
	10-A12	12.182	EMBLEM, R/END FIN PNL (SILVER, USED ON ALL COLORS EXCEPT BLACK) (SS)	98-02	F	1	12369966
14.	10-M27	1.266	GRILLE, RAD ("CAMARO")	98-02	F	1	10280356
15.	10-N14	7.832	EMBLEM, FRT SPR FASCIA	98-02	F	1	10193494
16.	10-N17	10.092	SEALING STRIP, W/S (FOAM TAPE) (223MM LONGER THAN 10130875)	98-02	F	1	10132029

RPO DEFINITIONS

B84 -- ORNAMENTATION,EXTERIOR,BODY SIDE MOLDING
Z28 -- SPECIAL PERFORMANCE PACKAGE,(MERCHANDISING OPTION)
Z4C -- APPEARANCE PACKAGE 35TH ANNIVERSARY
10Q -- MOLDING COLOR,ARCTIC WHITE
11Q -- MOLDING COLOR,WHITE
13Q -- MOLDING COLOR,SILVER METALLIC
20Q -- MOLDING COLOR LT QUASAR BLUE MET (91)
28Q -- MOLDING COLOR,BLACK SAPPHIRE METALLIC
31Q -- MOLDING COLOR BRIGHT GREEN MET (97)
41Q -- MOLDING COLOR,BLACK
44Q -- MOLDING COLOR EXTERIOR,MED RED METALLIC(00)
71Q -- MOLDING COLOR,SUNSET ORANGE METALLIC(01)
79Q -- MOLDING COLOR -- MYSTIC TEAL PEARL
81Q -- MOLDING COLOR -- BRIGHT RED
88Q -- MOLDING COLOR BRIGHT PURPLE MET (97)
96Q -- MOLDING COLOR CAYENNE RED MET
96U -- PRIMARY COLOR-- EXTERIOR,CAYENNE RED MET(95)
99Q -- MOLDING COLOR,DARK SLATE METALLIC

cardiagn.com

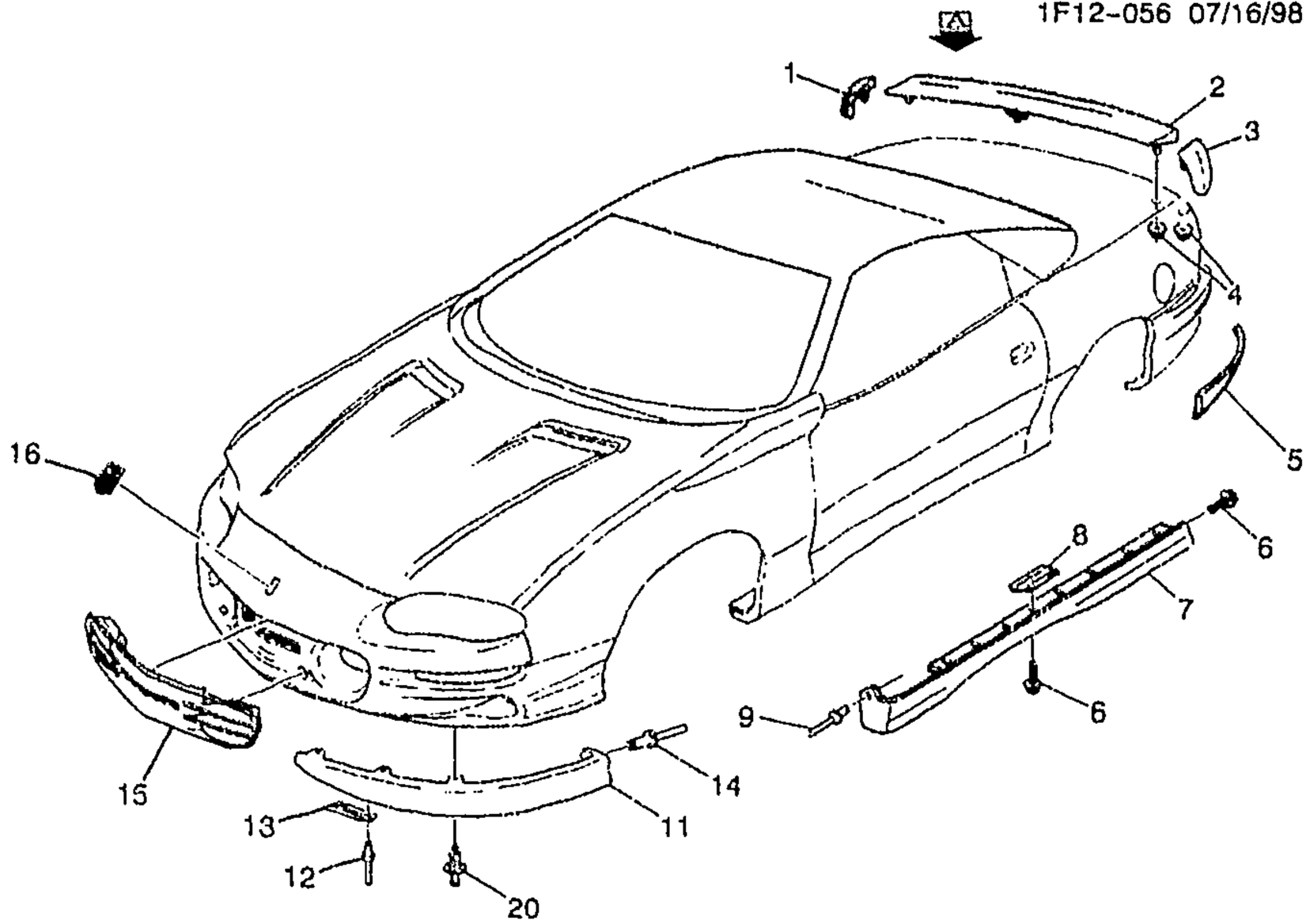

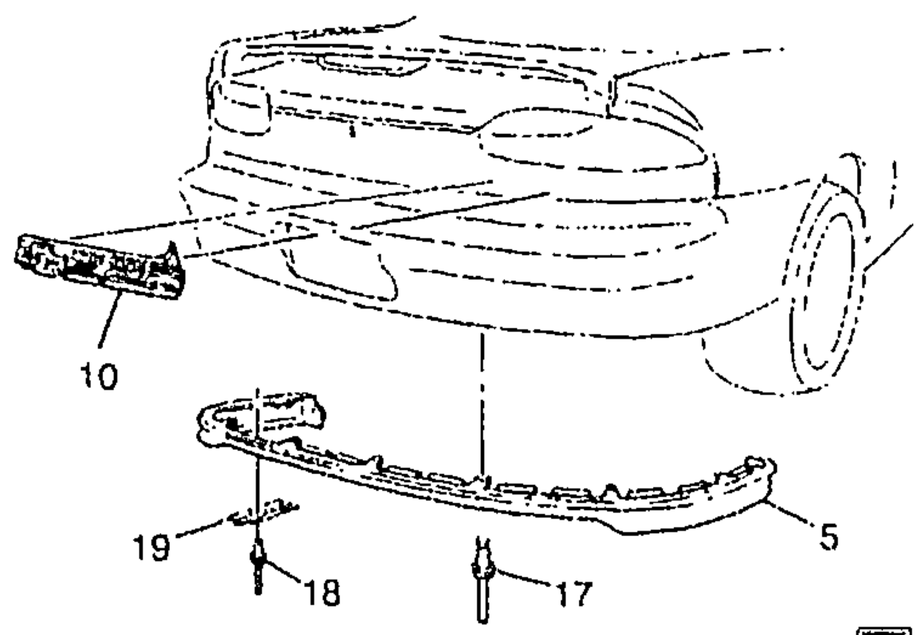

bb

VIEW A

1F12-056

1998-2002 F MOLDINGS/BODY (Y3F)

1.	10-A11	12.181	EXTENSION KIT, R/END SPLR ..		.....	RH	12531223
2.	10-A11	12.181	SPOILER KIT, R/END (INCLS SPLR, NUTS, BOLT ONLY)	98-02	F (Y3F)	1	12531222
3.	10-A11	12.181	EXTENSION KIT, R/END SPLR ..	98-02	F (Y3F)	LH	12531223
4.		8.921	NUT, STAMPED FITS 6.3 STUD-TYPE B SELF THD STL PC (C/WDO R/MLDG)	98-02	.....	11	11502553
5.	10-N14	7.832	MOLDING KIT, RR BPR FASCIA (INCLS 17-19)	98-02	F (Y3F)	1	12530102

cardiagn.com

6.	10–N16	8.309	**BOLT**, RKR PNL MLDG (PART OF 7)	98–02	F	14	25543139
7.	10–N16	8.304	**MOLDING KIT**, RKR PNL (INCLS 6, 8, 9)	98–02	F (Y3F)	RH	12456137
	10–N16	8.304	**MOLDING KIT**, RKR PNL (INCLS 6, 8, 9)	98–02	F (Y3F)	LH	12456138
8.	10–M27	1.303	**RETAINER**, F/END FASCIA MLDG (PART OF 7) (1.269)	98–02	F (Y3F)	6	12531210
9.	10–N13	7.831	**RIVET**, FRT BPR FASCIA REINF (PART OF 7) (PLASTIC)	98–02	F (Y3F)	2	10184895
10.	10–A12	12.182	**EMBLEM**, R/END FIN PNL (BLACK/RED) (BOWTIE Z28)	98–02	F	RH	10154591
	10–A12	12.182	**EMBLEM**, R/END FIN PNL (RED/BLACK) (BOWTIE RS)	98–02	F	1	12530095
	10–A12	12.182	**EMBLEM**, R/END FIN PNL (RED, USED ONLY ON BLACK VEHICLES) (SS)	98–02	F	1	12369965
	10–A12	12.182	**EMBLEM**, R/END FIN PNL (SILVER, USED ON ALL COLORS EXCEPT BLACK) (SS)	98–02	F	1	12369966
11.	10–M27	1.263	**MOLDING KIT**, F/END FASCIA (INCLS 12–14, 20) (2–PIECE))	98–02	F	RH	12455117
	10–M27	1.263	**MOLDING KIT**, F/END FASCIA (INCLS 12–14, 20) (2–PIECE))	98–02	F	LH	12455118
12.	10–N13	7.831	**RIVET**, FRT BPR FASCIA REINF (PART OF 11) (PLASTIC)	98–02	F (Y3F)	21	10184895
13.	10–M27	1.303	**RETAINER**, F/END FASCIA MLDG (PART OF 11) (1.269)	98–02	F (Y3F)	3	12531210
14.	10–N13	7.831	**RIVET**, FRT BPR FASCIA REINF (PART OF 11) (PLASTIC)	98–02	F (Y3F)	2	10184895
15.	10–M27	1.266	**GRILLE**, RAD ("CAMARO")	98–02	F	1	10280356
16.	10–N14	7.832	**EMBLEM**, FRT BPR FASCIA	98–02	F	1	10193494
17.	10–N13	7.831	**RIVET**, FRT BPR FASCIA REINF (PART OF 5) (PLASTIC)	98–02	F (Y3F)	11	10184895
18.	10–N19	10.485	**RIVET**, RR S/D LK ACTR (PART OF 5) (7.831)	98–02	F (Y3F)	28	12531204
19.	10–M27	1.303	**RETAINER**, F/END FASCIA MLDG (PART OF 5) (1.269)	98–02	F (Y3F)	14	12531210
20.	10–N13	7.831	**RETAINER**, RR BPR FASCIA EXTN (PART OF 11)	98–02	F (Y3F)	3	12533567

RPO DEFINITIONS
Y3F – SALES PACKAGE RS CAMARO UPFITTER

cardiagram.com

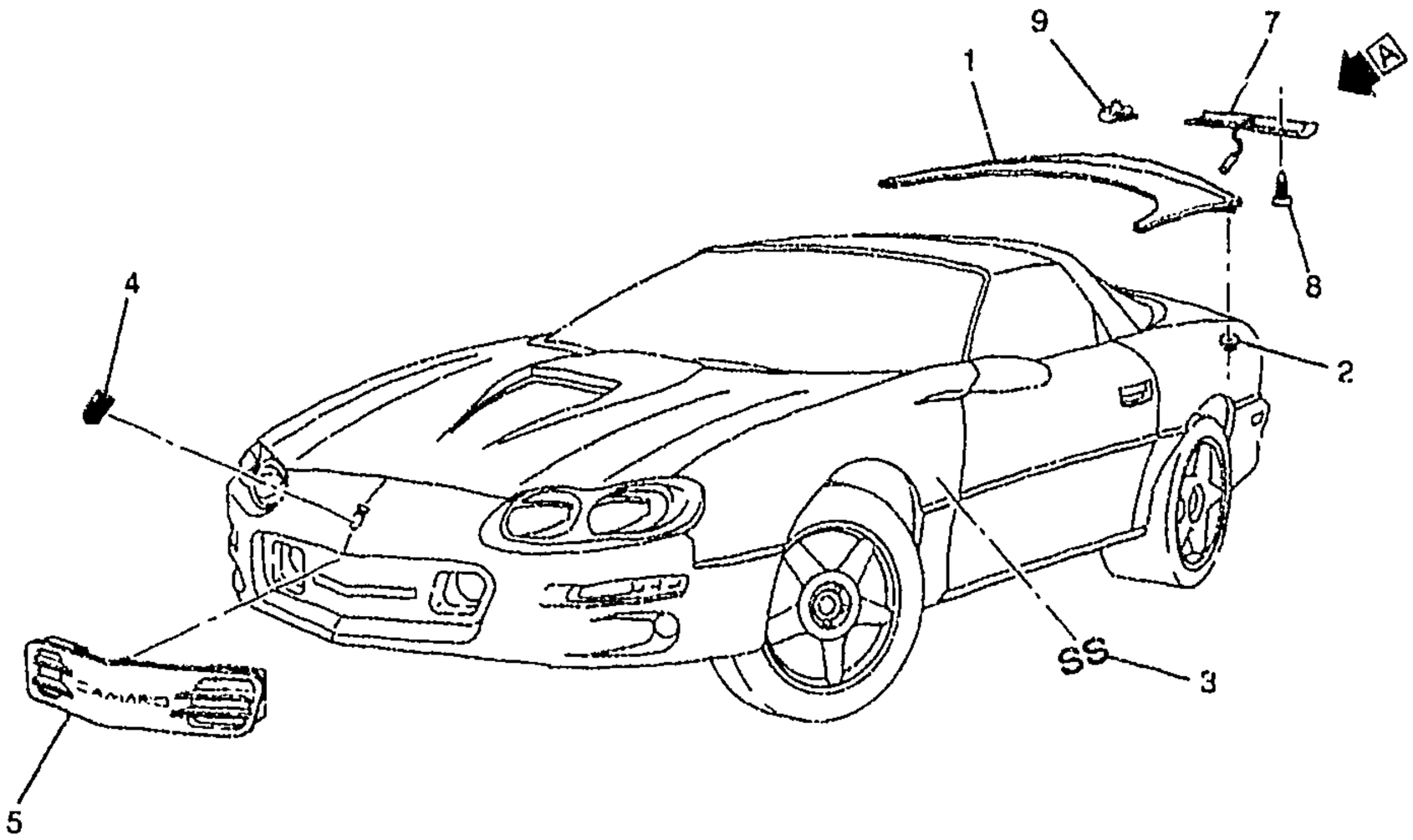

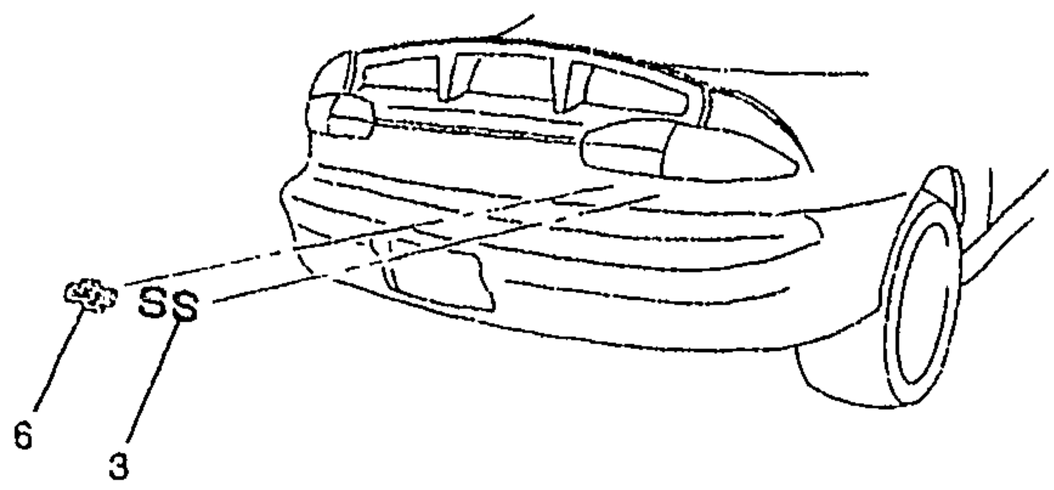

VIEW A

bb

1F12-064

1998-2002 F MOLDINGS/BODY ("SS")(WU8)

1.	10-A11	12.181	SPOILER, R/END	98-02	F (EXC T2H)	1	10253518
	10-A11	12.181	SPOILER, R/END	98-02	F (T2H) (EXPORT)	1	10253519
2.		8.921	NUT, STAMPED FITS 6.3 STUD-TYPE B SELF THD STL PC (Q/WDO R/MLDG)	98-02	.....	11	
3.	10-A12	12.182	EMBLEM, R/END FIN PNL (SILVER, USED ON ALL COLORS EXCEPT BLACK) (SS)	98-02	F (WU8)	3	12369966
	10-A12	12.182	EMBLEM, R/END FIN PNL (RED, USED ONLY ON BLACK VEHICLES) (SS)	98-02	F (WU8)	3	12369965
4.	10-N14	7.832	EMBLEM, FRT BPR FASCIA	98-02	F	1	10193494

cardiagn.com

							1F12-064
5.	10-M27	1.266	GRILLE, RAD ("CAMARO")	98-02	F	1	10280356
6.	10-A12	12.182	EMBLEM, R/END FIN PNL (BLACK/RED) (BOWTIE Z28)	98-02	F (WU8)	RH	10154591
7.	10-N10	2.679	LAMP, HIGH MT STOP (INCLS 8, 9) (LED STYLE LAMP, INCLUDES CONNECTOR)	98-02	F (WU8)	1	12369969
8.		8.977	SCREW, PAN HD TORX TAP M4.2X1.41X25 SS BL OX (PART OF 7)	98-02	F (WU8)	3	11504662
9.		8.921	NUT, U TYPE, MULTI THD, PREV TORQ, M4.2X1.41TAP, 8.1REACH, 0.65-3.80 PNLS 1065 PZOR (PART OF 7) (AC-DELCO #11513599)	98-02	F (WU8)	3	11513599

RPO DEFINITIONS
T2H – ORNAMENTATION,UNIQUE REQUIREMENTS(EXPORT)
WU8 – SALES PACKAGE Z28 SS UPFITTER

cardiagn.com

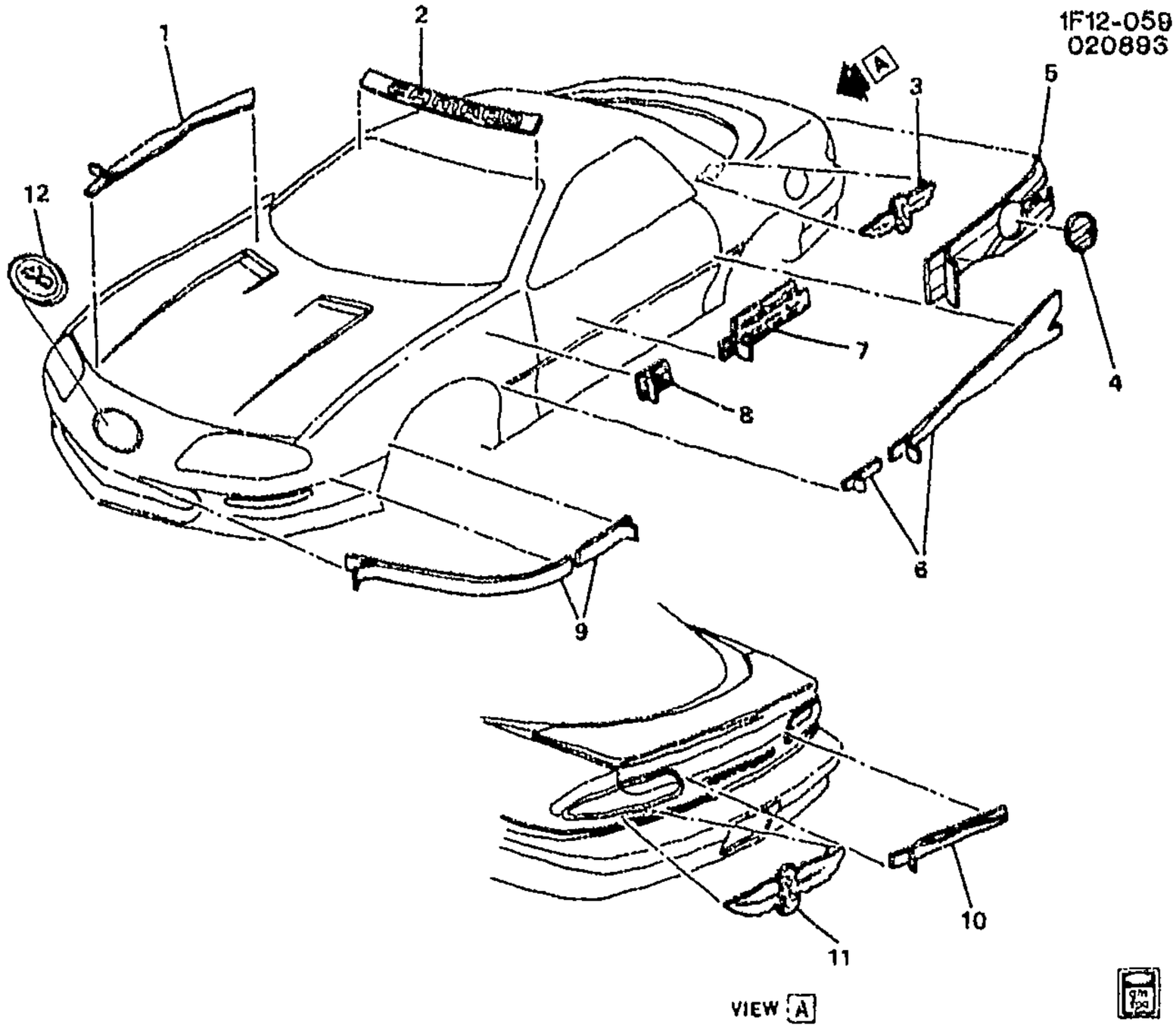

1F12-059

1993 F STRIPES/BODY (W/INDY PKG B5A)

1.	10-N14	8.055	STRIPE, HOOD OUTBOARD (FOR RH & LH)	93	F (B5A)	1	10229442
2.	10-N16	10.027	DECAL, W/S NA	93	F (B5A)	1	10229455
3.	10-A22	12.812	EMBLEM, RF SI	93	F (B5A)	2	10230113
4.	10-A9	12.116	DECAL, R/Q	93	F (B5A)	1	10229451
5.		DISCON	STRIPE, BODY SI RR (12.116)	93	F (B5A)	LH	10229449
6.		DISCON	STRIPE, BODY SI (8.132)	93	F (B5A)	LH	10243675
	10-N14	8.132	STRIPE, BODY SI	93	F (B5A)	RH	10243676
7.		DISCON	DECAL, FRT S/D UPR (OFFICIAL PACE CAR)	93	F (B5A)	LH	10229443
	10-A8	12.112	DECAL, FRT S/D UPR (OFFICIAL PACE CAR)	93	F (B5A)	RH	10229444
8.		DISCON	DECAL, F/FDR NA (INDIANAPOLIS 500/SEVENTY SEVENTH) (8.147)	93	F (B5A)	1	10229453
9.	10-N14	7.832	STRIPE, FRT BPR FASCIA	93	F (B5A)	LH	10229447
	10-N14	7.832	STRIPE, FRT BPR FASCIA	93	F (B5A)	RH	10229448
10.	10-A12	12.182	STRIPE, R/CMPT LID	93	F (B5A)	1	10229454
11.	10-A12	12.182	EMBLEM, R/END FIN PNL (BLACK/RED) (BOWTIE Z28)	93	F	RH	10154591

cardiagn.com

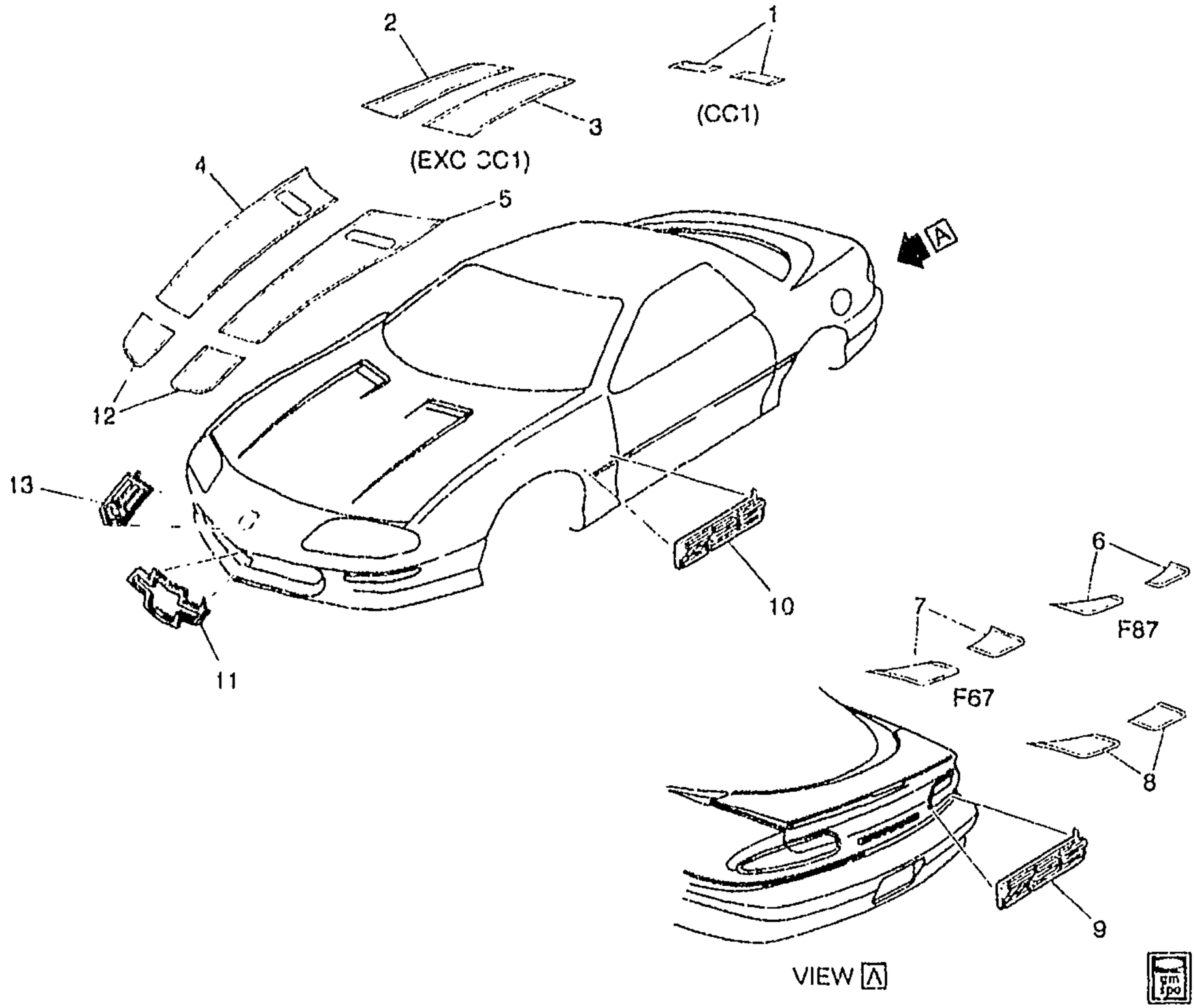

1F12-057

1997 F STRIPES/BODY (W/30TH ANNIV PKG Z4C)

1.	10-A22	12.812	STRIPE, RF PNL RR	97	F87 (CC1, Z4C) (EXC WU9)	1	10276925
2.	10-A22	12.812	STRIPE, RF PNL	97	F87 (Z4C) (EXC CC1, WU9)	RH	10280478
3.	10-A22	12.812	STRIPE, RF PNL	97	F87 (Z4C) (EXC CC1, WU9)	LH	10280479
4.	10-N14	8.055	STRIPE, HOOD OUTBOARD	97	F (Z4C) (EXC WU9)	RH	10276922
5.	10-N14	8.055	STRIPE, HOOD OUTBOARD	97	F (Z4C) (EXC WU9)	LH	10276923
6.	10-A12	12.182	STRIPE, R/CMPT LID	97	F87 (Z4C) (EXC WU9)	1	10276926
7.	10-A12	12.182	STRIPE, R/CMPT LID	97	F67 (Z4C) (EXC WU9)	1	10276928
8.	10-A12	12.182	STRIPE, R/END SPLR UPR	97	F (Z4C) (EXC WU9)	1	10276927
9.	10-A12	12.182	EMBLEM, R/END FIN PNL (BLACK/RED) (BOWTIE Z28)	97	F	RH	10154591
10.	10-N15	8.147	EMBLEM, F/FDR ("Z28")	97	F (Z28)	2	10139552

cardiagn.com

11.	10–M27	1.303	**EMBLEM**, RAD GRL (RED EMBLEM ON WHITE BACKGROUND)	97	F (Z4C)	1	10290781
12.	10–M27	1.263	**STRIPE**, F/END FASCIA (7.832) ..	97	F (Z4C) (EXC WU9)	1	10280475
13.	10–N14	7.832	**EMBLEM**, FRT BPR FASCIA	97	F	1	10193494

RPO DEFINITIONS

CC1 – ROOF,HATCH,REMOVABLE PANELS,GLASS
WU9 – SALES PKG ANNIVERSARY Z28 SS
Z28 – SPECIAL PERFORMANCE PACKAGE,(MERCHANDISING OPTION)
Z4C – APPEARANCE PACKAGE 30TH ANNIVERSARY

cardiagn.com

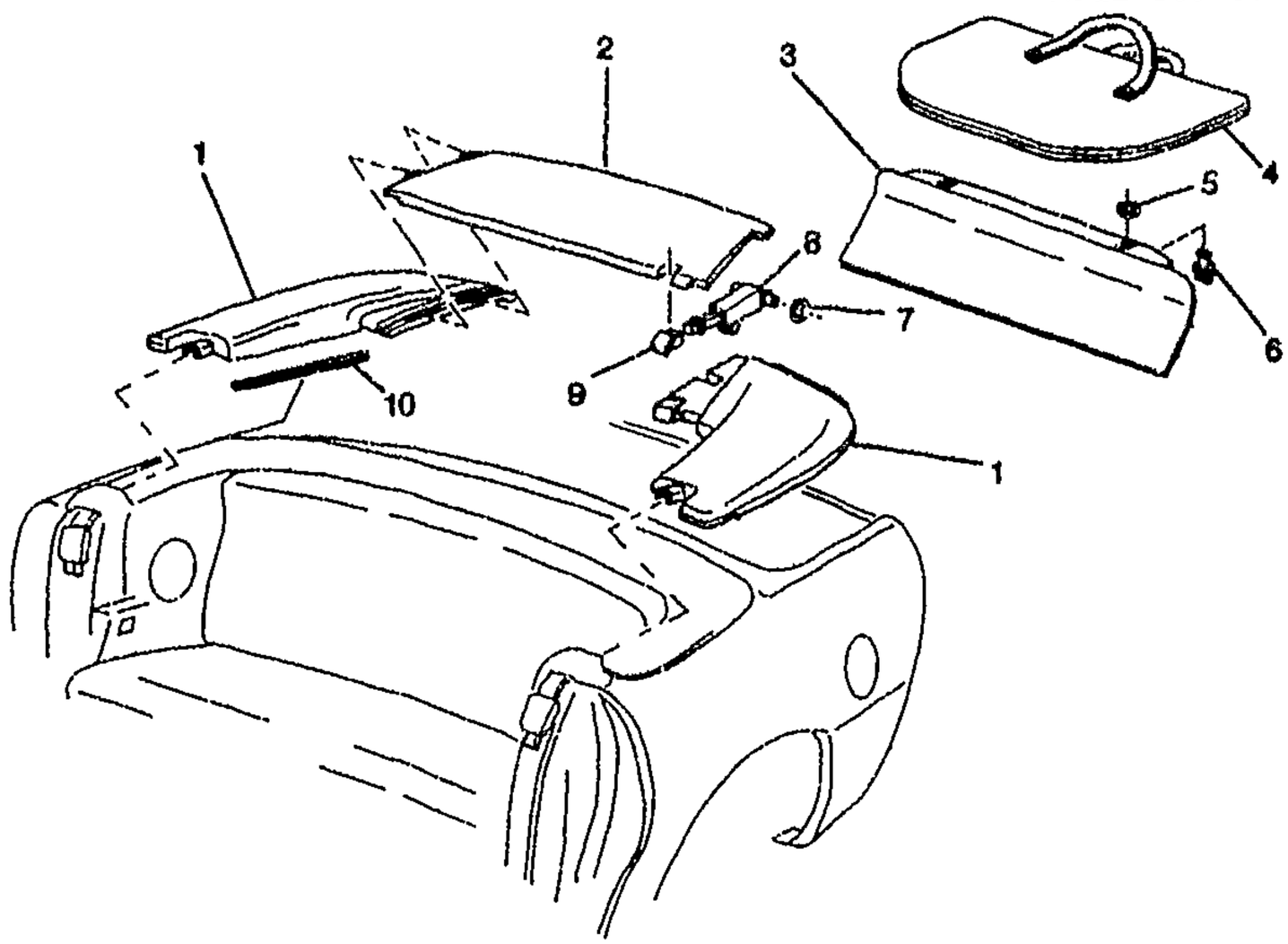

MF12-009

1994-2002 F67 COVER/TONNEAU

1.	10-A10	12.170	**EXTENSION**, F/TOP STOW COMPT CVR (INCLS 10) (GRAPHITE)	94-99	F67	RH	10294888
	10-A10	12.170	**EXTENSION**, F/TOP STOW COMPT CVR (INCLS 10) (GRAPHITE)	94-99	F67 (10I, 14I, 73I)	LH	10294889
	10-A10	12.170	**EXTENSION**, F/TOP STOW COMPT CVR (INCLS 10) (NEUTRAL)	94-02	F67	LH	10294891
	10-A10	12.170	**EXTENSION**, F/TOP STOW COMPT CVR (INCLS 10) (NEUTRAL)	96-02	F67	RH	10294890
	10-A10	12.170	**EXTENSION**, F/TOP STOW COMPT CVR (INCLS 10) (EBONY)	00-02	F67	LH	10431845
	10-A10	12.170	**EXTENSION**, F/TOP STOW COMPT CVR (INCLS 10) (EBONY)	00-02	F67	RH	10431846
2.	10-A10	12.170	**COVER**, F/TOP STOW COMPT (GRAPHITE)	94-99	F67	1	10294886
	10-A10	12.170	**COVER**, F/TOP STOW COMPT (NEUTRAL)	96-02	F67	1	10294887
	10-A10	12.170	**COVER**, F/TOP STOW COMPT (EBONY)	00-02	F67	1	10431843
3.	10-A27	12.981	**PANEL**, R/CMPT CLOSEOUT (INCLS 5, 6) (GRAPHITE) (15.222)	94-02	F67	1	10246550
4.	10-B14	13.450	**BAG**, F/TOP STOW COMPT BOOT	94-02	F67	1	10193284

cardiagn.com

5.	10–N28	15.222	**WASHER**, R/CMPT CLOSEOUT PNL LAT (PART OF 3)	94–02	F67	2	10215551
6.	10–N28	15.222	**LATCH**, R/CMPT CLOSEOUT PNL (PART OF 3) (GRAPHITE) ...	94–02	F67	1	10230884
7.		8.921	**NUT**, PUSH–ON, M6X1, SPR STL, STYLE 1, POR (F/TOP STOW COMPT CVR LAT REL LINK)	94–02	.....	2	14093869
8.	10–A10	12.170	**LATCH**, F/TOP STOW COMPT CVR	94–02	F67	1	10225726
9.	10–N22	14.080	**PUSHBUTTON**, F/TOP FRT LAT REL (GRAPHITE)	94–95	F67	1	10225727
	10–N22	14.080	**PUSHBUTTON**, F/TOP FRT LAT REL (GRAPHITE)	96	F67 (12I, 14I, 73I)	1	10225727
	10–N22	14.080	**PUSHBUTTON**, F/TOP FRT LAT REL (NEUTRAL)	96–02	F67 (52I)	1	10276436
	10–N22	14.080	**PUSHBUTTON**, F/TOP FRT LAT REL (GRAPHITE)	97–99	F67 (10I, 14I, 73I)	1	10225727
	10–N22	14.080	**PUSHBUTTON**, F/TOP FRT LAT REL	00–02	F67 (19I, 73I, 92I)	1	10431844
	10–N22	14.080	**PUSHBUTTON**, F/TOP FRT LAT REL	02	F67 (19I, 92I)	1	10431844
10.	10–A10	12.170	**WEATHERSTRIP**, F/TOP STOW COMPT CVR (PART OF 1)	94–02	F67	2	10225725

RPO DEFINITIONS

10I – INTERIOR TRIM – ARCTIC WHITE
12I – INTERIOR TRIM GRAPHITE
14I – INTERIOR TRIM LT GRAY
19I – INTERIOR TRIM,BLACK
52I – INTERIOR TRIM LIGHT NEUTRAL
73I – INTERIOR TRIM,FLAME RED
92I – INTERIOR TRIM SHALE/PEWTER

cardiagn.com

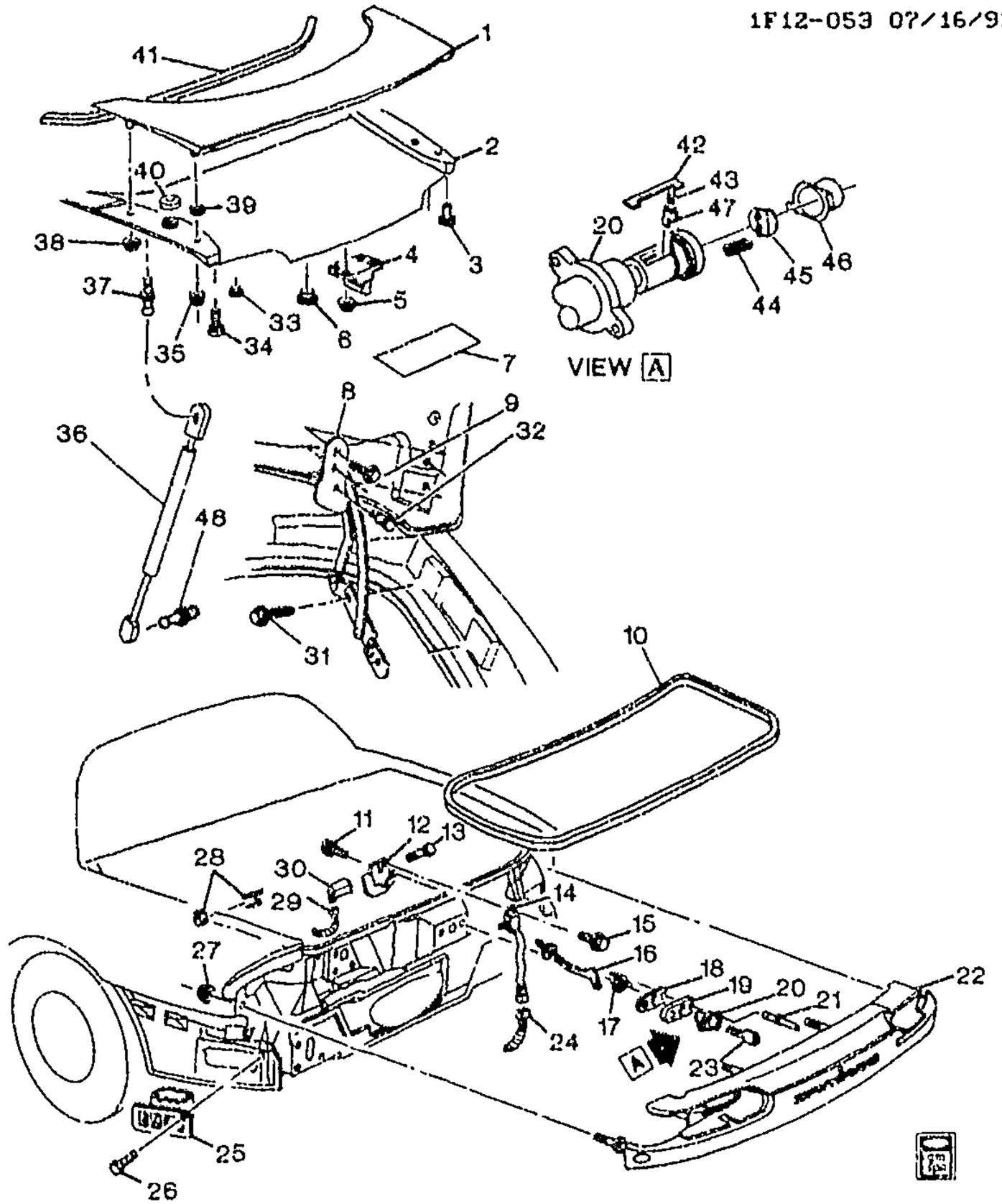

1F12-053

1994-2002 F67 DECK LID HARDWARE

1.	10-A11	12.181	SPOILER, R/END	94-02	F (EXC T2H)	1	10253518
	10-A11	12.181	SPOILER, R/END	94-02	F (T2H) (EXPORT)	1	10253519
2.	10-A11	12.181	PANEL, R/CMPT LID	94-02	F67	1	10258597
3.		8.973	PLUG, RD 1 3/4 HOLE PLASTIC (R/CMPT LID INR PNL ACC HOLE)	94-02		AR	6256958
4.	10-A15	12.237	STRIKER, R/CMPT L/WDO LK (HOLE SIZE 11MM)	94-98	F01		16603996
	10-A10	12.170	STRIKER, F/TOP STOW COMPT LID LAT (HOLE SIZE 11MM) (12.237)	99-02	F		16603996
	10-A15	12.237	STRIKER, R/CMPT L/WDO LK (HOLE SIZE 9MM)	99-02	F01		16639359

cardiagn.com

5.		8.917	NUT, HFH M6X1X6.5 ZOD 9 (R/CMPT L/WDO LK STKR)	94-02		4	3530297
6.		8.973	PLUG, BUTTON 3/4 HOLE, BLACK PLASTIC (E/GATE DRN) (9.647) (AC-DELCO #15632415)	94-02		AR	15632415
		8.973	PLUG, BUTTON 3/4 HOLE, BLACK PLASTIC (E/GATE DRN)	94-02		AR	4725594
7.		N.S.	LABEL, F/TOP DMG NTC				
8.	10-A12	12.184	HINGE, R/CMPT LID	94-02	F67	RH	10257986
	10-A12	12.184	HINGE, R/CMPT LID	94-02	F67	LH	10257987
9.		8.900	BOLT-HEX, M8X1.25X30, 22 THD, 24MM OD, 9.8, 7114M (R/CMPT LID HGE)	94-02		4	11516594
10.	10-A17	12.269	WEATHERSTRIP, R/CMPT LID	94-02	F67	1	10261606
11.		8.900	BOLT-HEX, M6X1X16, 9 THD, 17 OD, 9.8, 6280M (E/GATE LAT)	94		3	11517483
	10-A15	12.242	BOLT, E/GATE LAT (M6X1X18) (1.060)	95-98	F	3	52464988
	10-A15	12.242	BOLT, R/CMPT L/WDO LAT	99-02	F	3	11517753
	10-A15	12.242	BOLT, R/CMPT L/WDO LAT (8.900)	99-02	F	3	11517887
12.	10-A15	12.242	LATCH, E/GATE	01	F67 (2ND DES)	1	10307835
	10-A15	12.242	LATCH, E/GATE	01	F67 (1ST DES)	1	16629978
	10-A15	12.242	LATCH, E/GATE	94-98	F	1	16629978
	10-A15	12.242	LATCH, E/GATE	99-00	F67	1	16629978
	10-A15	12.242	LATCH, E/GATE	02	F67	1	16629978
	10-A15	12.242	LATCH, E/GATE (VEHICLES BUILT EMERGENCY TRUNKRELEASE LATCH SYSTEM ORDER 2ND DES FOR 1ST DES SEE 16629978)	01	F67 (2ND DES)	1	10307835
	10-A15	12.242	LATCH, E/GATE (VEHICLES BUILT W/O EMERGENCY TRUNKRELEASE LATCH SYSTEM ORDER 1ST DES FOR 2ND DES SEE 10307835)	01	F67 (1ST DES)	1	16629978
13.		8.977	SCREW, HEX W/FL WA, M4.8X1.6X13, BZ (R/CMPT LID LK REL ACTR)	94-02		2	11515440
14.	10-A16	12.243	SWITCH, R/CMPT LID AJAR IND (LOCATED ON LAT IN TRUNK) (AC-DELCO #D1459C)	94-02	F	1	16608046
15.		8.977	SCREW, PAN HD C/R TAP M4.2X1.41X10 PC (AJAR SW TO LAT) (AC-DELCO #11501265)	94-02		1	11501265
16.	10-A17	12.252	SHAFT, R/CMPT LID LK CYL	94-02	F	1	16620897
17.	10-A17	12.249	SPRING, R/CMPT LID LK CYL RTN	94-02	F	1	7001087
18.		N.S.	GASKET, R/CMPT LID LK CYL				
19.	10-A17	12.249	SPACER, R/CMPT LID LK CYL (TO PNL) (W/GSKT) (12.247)	94-02	F	1	16621101
20.	10-A17	12.248	CYLINDER, R/CMPT LID LK (INCLS 44, 45, 46)	94-02	F	1	12506775
21.		8.967	RIVET, POP, TYPE MH SPLIT SELF PLUG, 1/4X.937SHANK, .51 DOME HD, .531-.593 GRIP, PL (R/CMPT LID LK CYL)	94-02	F	2	12338153

cardiagn.com

22.	10-A26	12.966	**PANEL**, R/END FIN	94-02	F	1	10262039
23.	10-M27	2.187	**KEY**, DR LK (OVAL HD, GRV H, B&S 320405A, CAN USE 20364745 BOOT)	94-02	F	2	1154607
24.	10-A16	12.243	**CONNECTOR**, SW-R/CMPT LID AJAR IND (BLACK) (3-WAY F W/LEADS) (2.535) (AC-DELCO #PT256)	94-02	F		12101864
25.	10-A23	12.940	**VALVE**, QTR OTR PNL PRESS RLF	94-96	F	1	10244394
	10-A23	12.940	**VALVE**, QTR OTR PNL PRESS RLF	97-02	F	1	10440792
26.		8.977	**BOLT**, SCR HEX W/FLAT WA 12 DIA TYPE AB (QTR OTR PNL PRESS RLF VLV)	94-02		4	11509374
27.		8.917	**NUT ASM**, HEX W/TT CON WA & SEALING WA, M6X1X5.5, 24 OD, (9), PS (R/END FIN PNL)	94-02		4	11509567
28.		8.950	**CLIP**, DELRIN, ADHESIVE (3.2 TO 12.7 DIA) (I/P WRG HARN)	94-02		2	555806
29.	10-A16	12.243	**CONNECTOR**, SOL-R/CMPT LID LAT REL ACTR (GRAY) (2-WAY F W/LEADS) (INDEX TAB CTR CAVITY A&B) (2.535) (AC-DELCO #PT217)	94-02	F	1	12101825
30.	10-A16	12.243	**ACTUATOR**, R/CMPT LID LAT REL (AC-DELCO #16630424)	94-98	F	1	16630424
	10-A16	12.243	**ACTUATOR**, R/CMPT LID LAT REL (AC-DELCO #16630424)	99	F67 (A90)	1	16630424
	10-A16	12.243	**ACTUATOR**, R/CMPT LID LAT REL (AC-DELCO #16630424)	00-02	F67	1	16630424
31.	10-A12	12.184	**BOLT**, R/CMPT LID HGE	94-02	F67	4	10223901
32.	10-A12	12.184	**BUMPER**, R/CMPT LID HGE ADJ BOLT	94-02	F67	2	10253234
33.		8.973	**PLUG**, RD 1 3/4 HOLE PLASTIC (SMALL)	94-02		AR	6256958
34.	10-A15	12.212	**BUMPER**, R/CMPT L/WDO	94-02	F	2	10292972
35.		8.917	**NUT**, HEX W/CON WA M6X1X5 5, 24-OD 9 PEOR (R/END SPLR) (8.915)	94-02		2	11508388
36.	10-A13	12.187	**STRUT**, R/CMPT LID	94-02	F67	RH	10193275
37.	10-A13	12.187	**STUD**, R/CMPT LID STRUT BALL (LID SI)	94-02	F67	2	10220170
38.		8.917	**NUT**, HEX W/CON WA M6X1X5.5, 24-OD 9 PEOR (R/END SPLR) (8.915)	94-02	F	2	11508388
39.		8.927	**WASHER**, SEALING, 4 ID, 25 OD, M4 THK, RUB (R/END SPLR)	94-02		4	20733729
40.	10-A11	12.181	**SEAL**, R/END SPLR (12.183)	94-02	F	1	10189355
41.	10-A26	12.971	**WEATHERSTRIP**, R/CMPT LID FRT AUX	94-02	F67	1	10415695
42.	10-A17	12.249	**RETAINER**, R/CMPT LID LK CYL TUMB SPR (BAR TYPE) (10.553)	94-02	F	2	601261
43.	10-A17	12.248	**SPRING**, R/CMPT LID LK CYL TUMB (BAR TYPE TUMBLER) (10.553)	94-02	F	5	3901067
44.	10-A17	12.249	**SPRING**, R/CMPT LID LK CYL SHUTTER (PART OF 20) (10.552)	94-02	F	2	12503691

cardiagn.com

45.	10-A17	12.249	**SHUTTER**, R/CMPT LID LK CYL (PART OF 20) (BLACK) (17MM DIA) (10.552)	94-02	F	1	12503693
46.	10-A17	12.249	**CAP**, R/CMPT LID LK CYL (PART OF 20) (20MM DIA X 19MM HGT) (W/FLANGE)	94-02	F	1	12503690
47.	10-A17	12.248	**TUMBLER**, R/CMPT LID LK CYL (#1) (SI BAR) (10.553)	94-02	F	1	3901061
	10-A17	12.248	**TUMBLER**, R/CMPT LID LK CYL (#2) (SI BAR) (10.553)	94-02	F	AR	3901062
	10-A17	12.248	**TUMBLER**, R/CMPT LID LK CYL (#3) (SI BAR) (10.553)	94-02	F	AR	3901063
	10-A17	12.248	**TUMBLER**, R/CMPT LID LK CYL (#4) (SI BAR) (10.553)	94-02	F	AR	3901064
	10-A17	12.248	**TUMBLER**, R/CMPT LID LK CYL (#5) (SI BAR) (10.553)	94-02	F	AR	3901065
48.	10-A13	12.187	**STUD**, R/CMPT LID STRUT BALL (LID SI) (PART OF 8)	94-02	F67	2	10220170

RPO DEFINITIONS

A90 – LOCK,REAR COMPARTMENT LID,REMOTE CONTROL,ELECTRIC RELEASE

T2H – ORNAMENTATION,UNIQUE REQUIREMENTS(EXPORT)

cardiagn.com

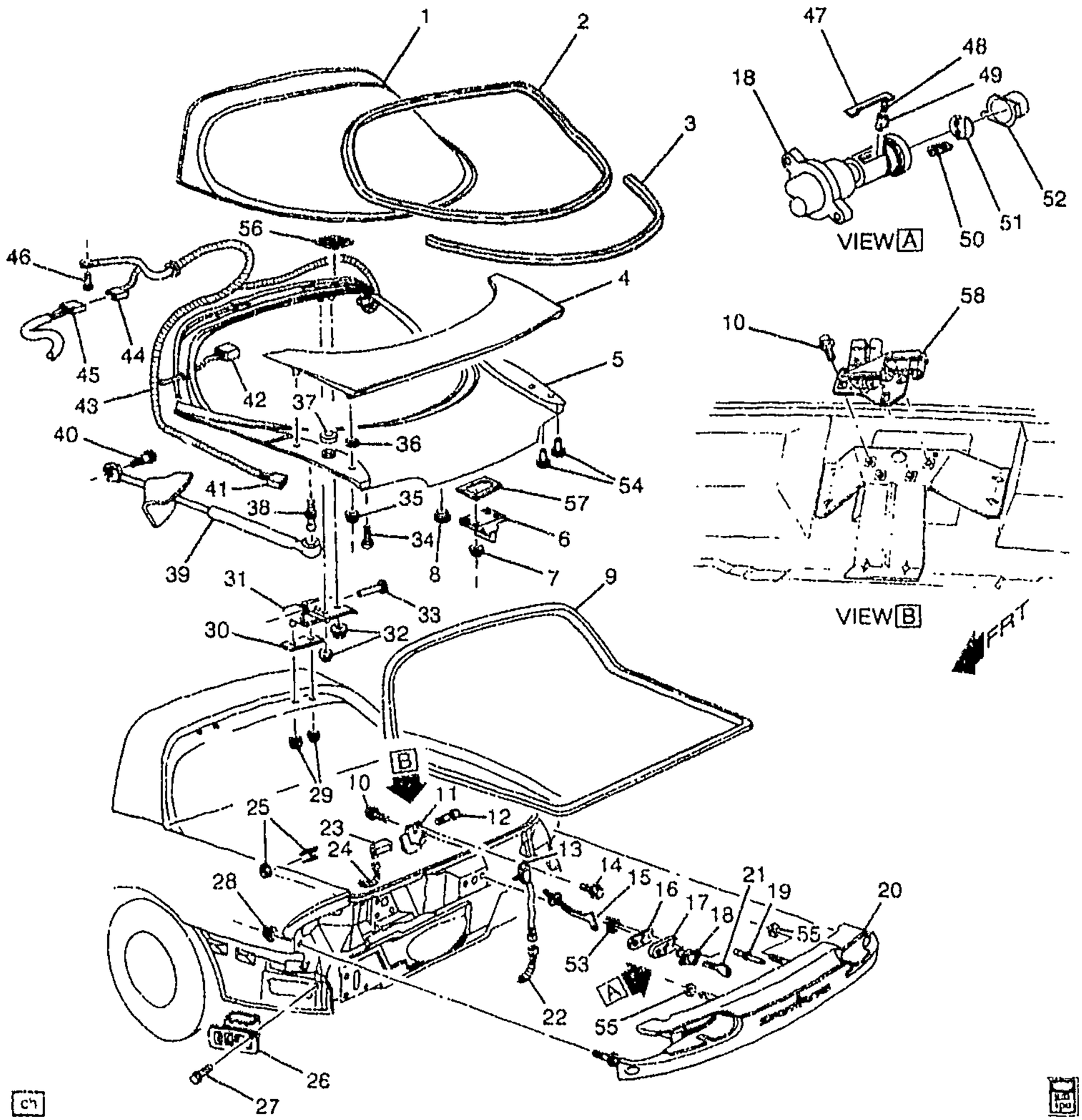

1F12-055

1993-2002 F87 LIFTGATE HARDWARE

1.	10-A11	12.180	WINDOW, R/CMPT LIFT	93-02	F87 (EXC C49)	1	10277010
	10-A11	12.180	WINDOW, R/CMPT LIFT	93-97	F87 (C49)	1	10277011
	10-A11	12.180	WINDOW, R/CMPT LIFT	98-02	F87 (C49) (EXC A26) ..	1	10277011
	10-A11	12.180	WINDOW, R/CMPT LIFT	02	F87 (A26, C49)	1	10277012
	10-A11	12.180	WINDOW, R/CMPT LIFT	98-02	F87 (A26, C49) (EXPORT)	1	10277012
2.	10-A17	12.269	WEATHERSTRIP, R/CMPT L/WDO AUX	93-94	F87	1	12534759

cardiagn.com

	10–A17	12.269	WEATHERSTRIP, R/CMPT L/WDO AUX	95–00	F87	1	10294196
	10–A17	12.269	WEATHERSTRIP, R/CMPT L/WDO AUX	02	F87	1	10306248
	10–A17	12.269	WEATHERSTRIP, R/CMPT L/WDO AUX (HIGH GLOSS. SEE P/N 10306248 FOR 2ND DES.)	01	F87 (1ST DES)	1	10433037
	10–A17	12.269	WEATHERSTRIP, R/CMPT L/WDO AUX (LOW GLOSS. SEE P/N 10294196 FOR 1ST DES.)	01	F87 (2ND DES)	1	10306248
3.	10–A17	12.269	WEATHERSTRIP, R/CMPT L/WDO AUX	93–94	F87	1	12534759
	10–A17	12.269	WEATHERSTRIP, R/CMPT L/WDO AUX	95–00	F87	1	10294196
	10–A17	12.269	WEATHERSTRIP, R/CMPT L/WDO AUX	02	F87	1	10306248
	10–A17	12.269	WEATHERSTRIP, R/CMPT L/WDO AUX (HIGH GLOSS. SEE P/N 10306248 FOR 2ND DES.)	01	F87 (1ST DES)	1	10433037
	10–A17	12.269	WEATHERSTRIP, R/CMPT L/WDO AUX (LOW GLOSS. SEE P/N 10294196 FOR 1ST DES.)	01	F87 (2ND DES)	1	10306248
4.	10–A11	12.181	SPOILER, R/END	93–02	F (EXC T2H)	1	10253518
	10–A11	12.181	SPOILER, R/END	93–02	F (T2H) (EXPORT)	1	10253519
5.	10–A11	12.181	PANEL, R/CMPT L/WDO	93–02	FP87	1	10255116
6.	10–A15	12.237	STRIKER, R/CMPT L/WDO LK (HOLE SIZE 11MM)	93–98	F	1	16603996
	10–A15	12.237	STRIKER, R/CMPT L/WDO LK (HOLE SIZE 9MM)	99–02	F87	1	16539359
7.		8.917	NUT, HFH M6X1X6.5 ZOR 9 (R/CMPT L/WDO LK STKR)	93–02		4	3530297
8.		8.973	PLUG, BUTTON 3/4 HOLE, BLACK PLASTIC (E/GATE DRN) (9.647) (AC–DELCO #15632415)	93–02		2	15632415
		8.973	PLUG, BUTTON 3/4 HOLE, BLACK PLASTIC (LARGE) (9.647) (AC–DELCO #15632415)	95–02	F87	2	15632415
9.	10–A17	12.269	WEATHERSTRIP, R/CMPT L/WDO	93–02	F87	1	10429545
10.		8.900	BOLT–HEX, M6X1X16, 9 THD, 17 OD, 9.8, 8280M (E/GATE LAT)	93–94		3	11517483
		8.977	SCREW, PAN HD C/R TAP M4.2X1.41X10 PC (E/GATE LAT) (AC–DELCO #11501265)	93–02		AR	11501265
	10–A15	12.242	BOLT, R/CMPT L/WDO LAT	99–02	F	3	11517753
	10–A15	12.242	BOLT, R/CMPT L/WDO LAT (8.900)	99–02	F	3	11517887
	10–A15	12.242	BOLT, E/GATE LAT (M6X1X18) (1.060)	95–99	F	3	52464988
11.		N.S.	LATCH, E/GATE				
12.		8.977	SCREW, HEX W/FL WA, M4.8X1.6X13, BZ (R/CMPT LID LK REL ACTR)	93–02		2	11515440
13.	10–A16	12.243	SWITCH, R/CMPT LID AJAR IND (LOCATED ON LAT IN TRUNK) (AC–DELCO #D1459C)	93–02	F	1	16608046

cardiagn.com

14.		8.977	**SCREW**, PAN HD C/R TAP M4.2X1.41X10 PC (AJAR SW TO LAT) (AC–DELCO #11501265)	93–02		1	11501265
15.	10–A17	12.252	**SHAFT**, R/CMPT LID LK CYL	93–02	F	1	16620897
16.		N.S.	**GASKET**, R/CMPT LID LK CYL (PART OF 17)				
17.	10–A17	12.249	**SPACER**, R/CMPT LID LK CYL (TO PNL) (INCLS 16) (W/GSKT) (12.247)	93–02	F	1	16621101
18.	10–A17	12.248	**CYLINDER**, R/CMPT LID LK (INCLS 50, 51, 52)	93–02	F	1	12506775
19.	10–A17	12.249	**RIVET**, R/CMPT LID LK CYL (8.967)	93–02	F	2	12338153
20.	10–A26	12.966	**PANEL**, R/END FIN	93–02	F	1	10262039
21.	10–M27	2.187	**KEY**, DR LK (OVAL HD, GRV H, B&S 320405A, CAN USE 20364745 BOOT)	93–02	F	2	1154607
22.	10–A16	12.243	**CONNECTOR**, SW–R/CMPT LID AJAR IND (BLACK) (3–WAY F W/LEADS) (2.535) (AC–DELCO #PT256)	93–02	F	1	12101864
23.	10–A16	12.243	**ACTUATOR**, R/CMPT LID LAT REL (AC–DELCO #16630424)	93–98	F	1	16630424
	10–A16	12.243	**ACTUATOR**, R/CMPT LID LAT REL (AC–DELCO #16634740)	99–02	F87 (A90)	1	16634740
24.	10–A16	12.243	**CONNECTOR**, SOL–R/CMPT LID LAT REL ACTR (GRAY) (2–WAY F W/LEADS) (INDEX TAB CTR CAVITY A&B) (2.535) (AC–DELCO #PT217)	93–02	F	1	12101825
25.		8.950	**CLIP**, DELRIN, ADHESIVE (3.2 TO 12.7 DIA) (I/P WRG HARN)	93–02		2	555806
26.	10–A23	12.940	**VALVE**, QTR OTR PNL PRESS RLF	93–96	F	1	10244394
	10–A23	12.940	**VALVE**, QTR OTR PNL PRESS RLF	97–02	F	1	10440792
27.		8.977	**BOLT**, SCR HEX W/FLAT WA 12 DIA TYPE AB (QTR OTR PNL PRESS RLF VLV)	93–02		4	11509374
28.		8.917	**NUT ASM**, HEX W/TT CON WA & SEALING WA, M6X1X5.5, 24 OD, (9), PS (R/END FIN PNL)	93–02		4	11509567
29.		8.917	**NUT**, HFH, M8X1.25, 17.9 OD, 738 THK, 13MM HEX, 10, ZF (R/CMPT L/WDO BODY SI HGE) (8.915) (AC–DELCO #11514596)	93–02		4	11514596
30.	10–A12	12.184	**GASKET**, R/CMPT LID BODY SI HGE	93–02	F87	2	10178033
31.	10–A12	12.184	**HINGE**, R/CMPT L/WDO (INCLS 33)	93–02	F87	2	10150216
32.		8.917	**NUT**, HFH, M8X1.25, 17.9 OD, 738 THK, 13MM HEX, 10, ZF (R/CMPT L/WDO WDO SI HGE) (8.915) (AC–DELCO #11514596)	93–02		4	11514596
33.	10–A12	12.186	**PIN**, R/CMPT LID HGE (PART OF 31) (12.184)	93–02	F87	1	16609573
34.	10–A15	12.212	**BUMPER**, R/CMPT L/WDO	93–02	F	2	10292972

cardiagn.com

35.		8.917	NUT, HEX W/CON WA 6X1X5.5 16-OD ZP 9 (R/END SPLR)	93-02		4	11517293
		8.927	WASHER, SEALING, 4 ID, 25 OD, M4 THK, RUB (R/END SPLR)	93-02		4	20733729
36.		8.927	WASHER, SEALING, 4 ID, 25 OD, M4 THK, RUB (R/END SPLR)	93-02		4	20733729
37.	10-A11	12.181	SEAL, R/END SPLR (12.183)	93-02	F	1	10189355
38.	10-A13	12.187	STUD, R/CMPT L/WDO STRUT	93-02	F87	2	10143220
	10-A13	12.187	STUD, R/CMPT L/WDO STRUT (12.203)	01-02	F87	2	10198279
39.	10-A13	12.187	STRUT, R/CMPT L/WDO (P/N PAINTED ON HATCH END OF STRUT)	98-02	F87	RH	10284059
	10-A13	12.187	STRUT, R/CMPT L/WDO	98-02	F87	LH	10419989
	10-A13	12.187	STRUT, R/CMPT L/WDO	02	FP87	LH	10419989
	10-A13	12.187	STRUT, R/CMPT L/WDO (IF REPLC NON-IDENTICAL PART #S, REPLC MUST BE DONE IN PAIRS) (P/N PAINTED ON HATCH END OF STRUT)	93-94	F87	RH	10284059
	10-A13	12.187	STRUT, R/CMPT L/WDO (IF REPLC NON-IDENTICAL PART #S, REPLC MUST BE DONE IN PAIRS)	93-94	F87	LH	10419989
	10-A13	12.187	STRUT, R/CMPT L/WDO (IF REPLC NON-IDENTICAL PART #S, REPLC MUST BE DONE IN PAIRS) (P/N PAINTED ON HATCH END OF STRUT) (VIN 230984 & GREATER) (FOR 1ST DES SEE 10251723)	95	F87 (2ND DES)	RH	10284059
	10-A13	12.187	STRUT, R/CMPT L/WDO (IF REPLC NON-IDENTICAL PART #S, REPLC MUST BE DONE IN PAIRS) (VIN 230984 & GREATER)	95	F87 (2ND DES)	LH	10419989
	10-A13	12.187	STRUT, R/CMPT L/WDO (IF REPLC NON-IDENTICAL PART #S, REPLC MUST BE DONE IN PAIRS) (P/N PAINTED ON HATCH END OF STRUT)	96-97	F87	RH	10284059
	10-A13	12.187	STRUT, R/CMPT L/WDO (IF REPLC NON-IDENTICAL PART #S, REPLC MUST BE DONE IN PAIRS)	96-97	F87	LH	10419989
40.	10-A13	12.187	STUD, R/CMPT L/WDO STRUT	93-02	F87	2	10143220
	10-A13	12.187	STUD, R/CMPT L/WDO STRUT (12.203)	01-02	F87	2	10198279
41.	10-N10	2.694	CONNECTOR, LP-HIGH MT STOP (PART OF 43) (2-WAY F W/LEADS, W/INDEX TAB OTR EDGE OF CAVITY B) (2.535) (AC-DELCO #PT146)	93-02	F	AR	12085535
	10-N10	2.694	CONNECTOR, LP-HIGH MT STOP (PART OF 43) (BLACK) (2-WAY M W/LEADS) (2.535) (AC-DELCO #PT103)	93-02	F	1	12085481

cardiagn.com

42.	10–N16	9.778	CONNECTOR, INLINE–TO R/WDO DEFG (PART OF 43) (1–WAY F) (W/LEADS) (M/P 630 SELF LK) (AC–DELCO #PT798) .	93–98	F87 (C49)	2	12167133
	10–N16	9.778	CONNECTOR, INLINE–TO R/WDO DEFG (PART OF 43) (1–WAY F) (W/LEADS) (M/P 480) (8.965) (AC–DELCO #PT486) ...	94–98	F	1	12117353
	10–N16	9.778	CONNECTOR, INLINE–TO R/WDO DEFG (PART OF 43) (1–WAY F) (W/LEADS) (M/P 630 SELF LK) (AC–DELCO #PT798) .	99–02	F87 (C49) (EXC T79) ..	2	12167133
43.	10–N10	2.694	HARNESS, HIGH MT S/LP WRG (INCLS 41, 42, 44)	93–97	F87	1	12145132
	10–N10	2.694	HARNESS, HIGH MT S/LP WRG (INCLS 41, 42, 44)	98–02	F87 (EXC T79)	1	12177551
	10–N10	2.694	HARNESS, HIGH MT S/LP WRG (INCLS 41, 42, 44)	98–02	F87 (T79) (EXPORT) ...	1	12177635
44.	10–N2	2.530	CONNECTOR, INLINE–TO I/P HARN (PART OF 43) (3–WAY F) (W/LEADS) (2.535) (AC–DELCO #PT126)	93–97	F	1	12085505
	10–N2	2.530	CONNECTOR, INLINE–TO I/P HARN (PART OF 43) (BLACK) (2–WAY F W/LEADS) (2.535) (AC–DELCO #PT159)	98–02	F	1	12101888
45.		N.S.	CONNECTOR, R/CMPT LID WRG HARN		.....		
46.		8.977	SCREW, MET HEX HD (M6.3X1.81) (HIGH MT S/LP WRG HARN GND)	93–02	F	1	11502707
47.	10–A17	12.249	RETAINER, R/CMPT LID LK CYL TUMB SPR (BAR TYPE) (10.553) .	93–02	F	2	601261
48.	10–A17	12.248	SPRING, R/CMPT LID LK CYL TUMB (BAR TYPE TUMBLER) (10.553)	93–02	F	5	3901067
49.	10–A17	12.248	TUMBLER, R/CMPT LID LK CYL (#1) (SI BAR) (10.553)	93–02	F	1	3901061
	10–A17	12.248	TUMBLER, R/CMPT LID LK CYL (#2) (SI BAR) (10.553)	93–02	F	AR	3901062
	10–A17	12.248	TUMBLER, R/CMPT LID LK CYL (#3) (SI BAR) (10.553)	93–02	F	AR	3901063
	10–A17	12.248	TUMBLER, R/CMPT LID LK CYL (#4) (SI BAR) (10.553)	93–02	F	AR	3901064
	10–A17	12.248	TUMBLER, R/CMPT LID LK CYL (#5) (SI BAR) (10.553)	93–02	F	AR	3901065
50.	10–A17	12.249	SPRING, R/CMPT LID LK CYL SHUTTER (PART OF 18) (10.552)	93–02	F	2	12503691
51.	10–A17	12.249	SHUTTER, R/CMPT LID LK CYL (PART OF 18) (BLACK) (17MM DIA) (10.552)	93–02	F	1	12503693
52.	10–A17	12.249	CAP, R/CMPT LID LK CYL (PART OF 18) (20MM DIA X 19MM HGT) (W/FLANGE)	93–02	F	1	12503690
53.	10–A17	12.249	SPRING, R/CMPT LID LK CYL RTN	93–02	F	1	7001087
54.	10–A11	12.181	PLUG, E/GATE DRN (SMALL) ...	93–02	.....	5	10231979

cardiagn.com

55.		8.929	WASHER, PL, CD OR ZC (R/END FIN PNL)	93–02	F	2	120392
56.		8.958	TAPE, DUAL LK FSTN (44.5MM X 44 5MM – 5 PER PKG) (R/COMPT L/WDO WDO SI FSTN) (2.483)	93–02		2	12520053
57.	10–A15	12.237	SPACER, R/CMPT L/WDO LAT STKR (1999 ONLY)	99	F87	1	10423491
58.	10–A15	12.242	LOCK, R/CMPT L/WDO ((MANUAL)	99–02	F87	1	16635227
	10–A15	12.242	LOCK, R/CMPT L/WDO ((MANUAL)	02	FP87 (EXC A90)	1	16635227
	10–A15	12.242	LOCK, R/CMPT L/WDO ((MANUAL)	02	FS87 (A90)	1	16635227
		N.S.	LATCH, E/GATE ((MANUAL)	93	F	1	
		N.S.	LATCH, E/GATE ((MANUAL)	94–98	F	1	

RPO DEFINITIONS

A26 – WINDOW,UNITED KINGDOM AND EUROPEAN GLAZING(EXPORT)
A90 – LOCK,REAR COMPARTMENT LID,REMOTE CONTROL,ELECTRIC RELEASE
C49 – DEFOGGER,REAR WINDOW,ELECTRIC
T2H – ORNAMENTATION,UNIQUE REQUIREMENTS(EXPORT)
T79 – LAMPS,REAR FOG(EXPORT)

cardiagn.com

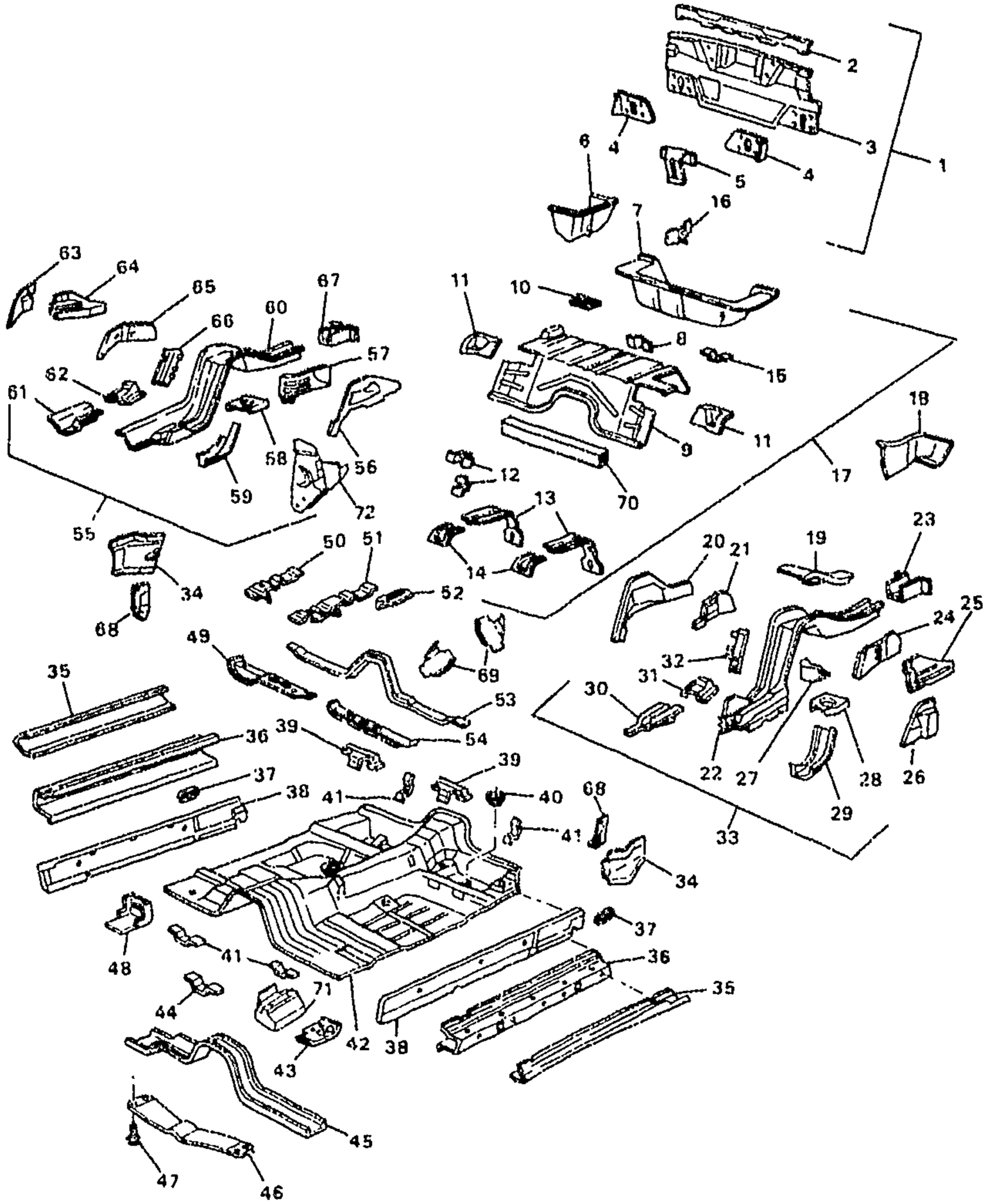

bk

MF12-004

1993 F87 SHEET METAL/BODY PART 4--UNDERBODY

1.	10-A26	12.066	PANEL, R/END (INCLUDES R/CMPT LID LK SUPT & RR BPR FASCIA BRKT) (INCLS 2-5)	93 F	1 12515662
2.		N.S.	BRACKET, RR BPR FASCIA (PART OF 1)	.....	
3.		N.S.	PANEL, R/END (PART OF 1)	....	

cardiagn.com

4.		N.S.	**REINFORCEMENT**, R/END PNL BPR SUPT (PART OF 1)					
5.		N.S.	**SUPPORT**, R/CMPT LID LAT (PART OF 1)					
6.	10-A27	12.981	**FILLER**, R/CMPT FLR PNL (TO QTR OTR PNL)	93	F		RH	10264701
7.		N.S.	**PANEL**, R/CMPT RR (PART OF 17)					
8.		N.S.	**PLATE**, SPA WHL STOW ANC (PART OF 17)					
9.		N.S.	**PANEL**, R/CMPT FRT (PART OF 17)					
10.	10-A19	12.810	**BRACKET**, RF LIFT OFF WDO STOW RET	93	F (AN4)		1	14098141
11.		N.S.	**FILLER**, R/CMPT PNL RR S/ABS (PART OF 17)					
12.	10-N12	3.690	**BRACKET**, CTLTC CONV H/SHLD RR INR (PART OF 17)	93	F		3	20134572
13.		N.S.	**REINFORCEMENT**, F/TNK STRP (PART OF 17)					
14.		N.S.	**BRACKET**, F/TNK STRP (PART OF 17)					
15.		N.S.	**BRACKET**, CTLTC CONV H/SHLD (PART OF 17)					
16.	10-A19	12.810	**BRACKET**, RF LIFT OFF PNL/WDO STOW RET	93	F (CC1)		2	10191846
17.	10-A27	12.981	**PANEL**, R/CMPT (INCLS 7-9, 11-15 & 70)	93	F		1	10297993
18.	10-A27	12.981	**FILLER**, R/CMPT FLR PNL (TO QTR OTR PNL)	93	F		LH	10150259
19.		N.S.	**EXTENSION**, R/CMPT PNL LGTDNL RL (PART OF 33)					
20.		N.S.	**EXTENSION**, R/CMPT PNL LGTDNL RL (PART OF 33)					
21.		N.S.	**REINFORCEMENT**, R/CMPT PNL LGTDNL RL RR SPR ST INR (PART OF 33)					
22.		N.S.	**RAIL**, R/CMPT PNL LGTDNL (PART OF 33)					
23.		N.S.	**REINFORCEMENT**, R/CMPT PNL LGTDNL RL RR BPR IMP BAR (PART OF 33)					
24.		N.S.	**REINFORCEMENT**, R/CMPT PNL LGTDNL RL RR SPR ST OTR (PART OF 33)					
25.		N.S.	**EXTENSION**, R/CMPT PNL LGTDNL RL (PART OF 33)					
26.		N.S.	**BRACKET**, RR SUSP JOUNCE BPR (PART OF 33)					
27.		N.S.	**BRACKET**, R/AXL TIE ROD (PART OF 33, 55)				LH	
	10-N13	5.418	**BRACKET**, R/AXL TIE ROD (PART OF 55)	93	F		RH	10245902
28.		N.S.	**REINFORCEMENT**, RR SPR ST (PART OF 33)					
29.		N.S.	**REINFORCEMENT**, R/CMPT FLR LGTDNL RL (PART OF 33)					

cardiagn.com

30.		N.S.	REINFORCEMENT, RR SUSP LWR CONT ARM (PART OF 33)					
31.		N.S.	REINFORCEMENT, R/CMPT FRT PNL LGTDNL RL (PART OF 33)					
32.		N.S.	PLATE, RR STAB SHF ANC (PART OF 33)					
33.	10-A27	12.986	RAIL, R/CMPT PNL LGTDNL (INCLS 19-32)	93	F		LH	10400604
34.	10-A24	12.942	EXTENSION, BODY L/PLR BR (TO W/H) (12.944)	93	F		RH	10141476
	10-A24	12.942	EXTENSION, BODY L/PLR BR (TO W/H) (12.944)	93	F		LH	10141477
35.	10-A23	12.934	PANEL, RKR OTR	93	F		RH	12529163
	10-A23	12.934	PANEL, RKR OTR	93	F		LH	12529164
36.	10-A23	12.934	REINFORCEMENT, RKR OTR PNL (INCLS 37)	93	F87		RH	10286194
	10-A23	12.934	REINFORCEMENT, RKR OTR PNL (INCLS 37)	93	F87		LH	10286195
37.		N.S.	PLATE, F/SEAT BELT ANC (PART OF 36, 38)					
38.	10-A23	12.934	PANEL, RKR INR (INCLS 37)	93	F		RH	10401912
	10-A23	12.934	PANEL, RKR INR (INCLS 37)	93	F		LH	10401913
39.		N.S.	PLATE, R/SEAT CUSH ANC					
40.		N.S.	PLUG, FLR PNL DRN HOLE					
41.		N.S.	RETAINER, BRK & FUEL PIPE					
42.		N.S.	PANEL, FLR					
43.		N.S.	REINFORCEMENT, FLR PNL #1 BAR					
44.	10-N12	3.616	BRACKET, EXH PIPE FRT H/SHLD (3.690)	93	F		1	20134572
45.		N.S.	BAR, FLR PNL #1					
46.	10-A26	12.980	REINFORCEMENT, FLR PNL AT TUN PNL (TO UNDERBODY BRKTS)	93	F87		1	10419512
47.		8.900	BOLT, HEX W/CONICAL WA, M8X1.25X30, 28.8 THD, 17 OD, 6 DG PT, 9.8, PE (FLR PNL CTR REINF)	93			4	11515659
48.		N.S.	SUPPORT, I/P CTR					
49.		N.S.	BAR, FLR PNL #2					
50.		N.S.	REINFORCEMENT, FLR PNL (PARK BRK LVR)					
51.		N.S.	REINFORCEMENT, FLR PNL (PARK BRK LVR)					
52.		N.S.	BRACKET, PARK BRK FRT CBL					
53.		N.S.	BAR, FLR PNL #3					
54.		N.S.	BAR, FLR PNL #2					
55.	10-A27	12.986	RAIL, R/CMPT PNL LGTDNL (INCLS 27, 56-67)	93	F		RH	10292630
56.		N.S.	EXTENSION, R/CMPT PNL LGTDNL RL (PART OF 55)					
57.		N.S.	REINFORCEMENT, R/CMPT PNL LGTDNL RL RR SPR ST INR (PART OF 55)					
58.		N.S.	REINFORCEMENT, RR SPR ST (PART OF 55)					
59.		N.S.	REINFORCEMENT, R/CMPT FLR LGTDNL RL (PART OF 55)					

cardiagn.com

61.		N.S.	REINFORCEMENT, RR SUSP LWR CONT ARM (PART OF 55) ..					
62.		N.S.	REINFORCEMENT, R/CMPT FRT PNL LGTDNL RL (PART OF 55) ..					
63.		N.S.	BRACKET, RR SUSP JOUNCE BPR (PART OF 55)					
64.		N.S.	EXTENS'ON, R/CMPT PNL LGTDN: . L (PART OF 55)					
65.		N.S.	REINFORCEMENT, R/CMPT PNL LGTDNL RL RR SPR ST OTR (PART OF 55)					
66.		N.S.	PLATE, RR STAB SHF ANC (PART OF 55)					
67.		N.S.	REINFORCEMENT, R/CMPT PNL LGTDNL RL RR BPR IMP BAR (PART OF 55)					
68.		N.S.	SUPPORT, R/SEAT BK CUSH PIV					
69.	10–N8	2.559	CLIP, I/P WRG HARN	93	F	AR	22591058
70.		N.S.	BAR, R/CMPT PNL FRT CR				
71.	10–N12	3.163	PROTECTOR, FUEL FEED & EVAP EMIS & RTN PIPE	93	F	2	10232676
	10–N11	3.145	PROTECTOR, FUEL FEED & EVAP EMIS & RTN PIPE (3.163) ..	93	F	2	10232676
72.	10–N13	5.418	BRACKET, R/AXL TIE ROD	93	F	RH	10245902

RPO DEFINITIONS
AN4 – RESTRAINT PROVISIONS,CHILD(CANADIAN)
CC1 – ROOF,HATCH,REMOVABLE PANELS,GLASS

cardiagn.com

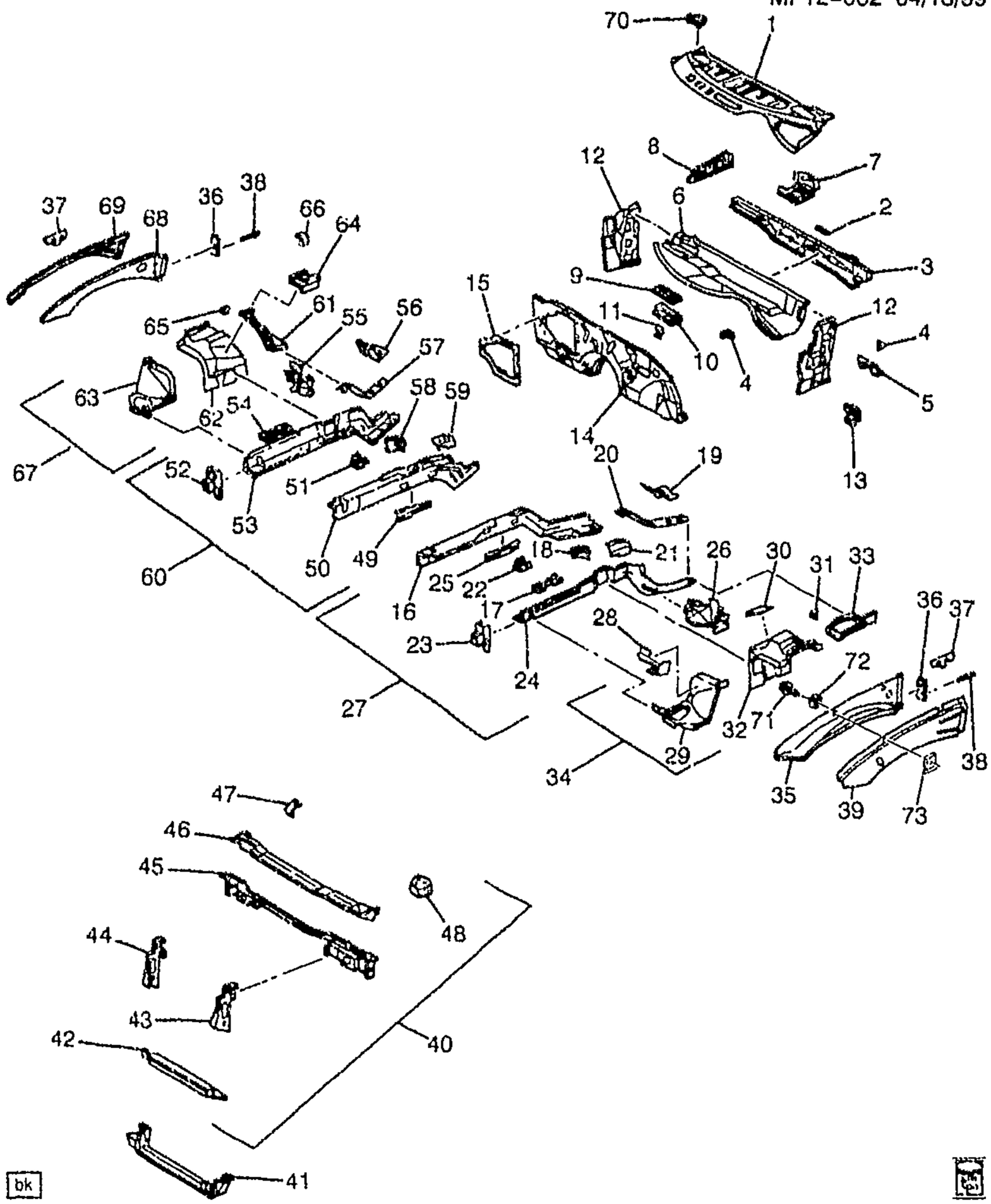

MF12-002

1993-2002 F SHEET METAL/BODY PART 1-ENGINE COMPARTMENT & DASH

1.	10-N16	10.027	SUPPORT, W/S (INCLS SUPPORT & NUT)	93-02	F	1	10292598
2.		N.S.	PLATE, BRK PED BRKT ANC				
3.		N.S.	REINFORCEMENT, W/S LWR FRM				
4.	10-N17	10.230	SUPPORT, I/P OTR	93-02	F	2	10159394
5.		N.S.	BRACKET, STRG COL UPR SUPT				

cardiagn.com

7.		N.S.	REINFORCEMENT, WSW MOT					
8.		N.S.	SUPPORT, DA PNL					
9.		N.S.	SEALING STRIP, PLNM WAT DFL (PART OF 10)					
10.	10–A18	12.804	DEFLECTOR, PLNM WAT (INCLS 9, 11) (2.8/3.6 THICK)	93–02	F		1	10243240
11.	10–N16	9.789	RETAINER, PLNM S/PNL WAT DFL (PART OF 10) (9.264)	93–02	F		4	15607103
12.	10–A18	12.659	REINFORCEMENT, BODY H/PLR INR PNL	93–02	F		RH	10239695
	10–A18	12.659	REINFORCEMENT, BODY H/PLR INR PNL	93–97	F		LH	10243250
	10–A18	12.659	REINFORCEMENT, BODY H/PLR INR PNL	98–02	F		1	10243258
13.		N.S.	BRACKET, BODY H/PLR TR					
14.		N.S.	PANEL, DA LWR EXTN					
15.		N.S.	REINFORCEMENT, DA PNL HTR OPG					
16.		N.S.	RAIL, F/CMPT OTR SI (PART OF 27)					
17.		N.S.	NUT, FRT STAB SHF BRKT (PART OF 27)					
18.		N.S.	REINFORCEMENT, F/CMPT OTR S/RL (PART OF 27)					
19.		N.S.	REINFORCEMENT, F/CMPT S/RL AT DA (PART OF 27)					
20.		N.S.	REINFORCEMENT, F/CMPT INR S/RL (PART OF 27)					
21.		N.S.	REINFORCEMENT, F/CMPT S/RL CTR (PART OF 27)					
22.		N.S.	BRACKET, DRIVETRAIN & FRT SUSP FRM (PART OF 27)					
23.	10–N13	7.009	EXTENSION, FRT BPR ENGY ABS E/CMPT S/RL (PART OF 27)	93–02	F		LH	10273673
24.		N.S.	RAIL, F/CMPT INR SI (PART OF 27)					
25.		N.S.	GUSSET, F/CMPT INR S/RL (PART OF 27)					
26.	10–N13	7.006	BRACE, F/CMPT INR S/RL RR (PART OF 27)	93–02	F		LH	10292612
27.	10–N13	7.006	RAIL, F/CMPT SI (INCLS 16–26)	93–02	F		LH	10273785
28.	10–M28	2.483	BRACKET, FUSE BLK RET (PART OF 34)	93–97				10275277
	10–M28	2.483	BRACKET, FUSE BLK RET (PART OF 34)	98–02				10290128
29.	10–N15	153	PANEL, FRT W/H FRT (PART OF 34)	93–97	F		LH	10275275
	10–N15	8.153	PANEL, FRT W/H FRT (PART OF 34)	98	F		LH	10407756
	10–N15	8.153	PANEL, FRT W/H FRT (PART OF 34)	99–02	F		LH	10425579
30.		N.S.	REINFORCEMENT, FRT W/H CTR PNL (PART OF 34)					
31.		N.S.	BRACKET, HOOD STRUT (PART OF 34)					

cardiagn.com

32.		N.S.	PANEL, FRT W/H CTR (PART OF 34)				
33.		N.S.	PANEL, FRT W/H RR (PART OF 34)				
34.	10–N15	0.153	PANEL KIT, FRT W/H (INCLS 28–33)	93–97	F	LH	12533903
	10–N15	8.153	PANEL KIT, FRT W/H (INCLS 28–33)	98–02	F	LH	12369529
35.		N.S.	RAIL, FRT W/H PNL UPR INR SI (*KIT1)				
36.		N.S.	BAFFLE, F/CMPT S/RL W/H PNL				
37.		N.S.	REINFORCEMENT, HOOD HGE				
38.		N.S.	RIVET, F/CMPT S/RL W/H PNL BFL				
39.	10–N13	7.006	RAIL, F/CMPT FRT OTR SI	93–02	F	LH	10242503
40.	10–M27	1.270	PANEL, F/CMPT FRT (INCLS 42–48)	93–97	F	1	12515647
	10–M27	1.270	PANEL, F/CMPT FRT (INCLS 42–48)	98–02	F	1	12455736
41.	10–M27	1.270	REINFORCEMENT, RAD LWR SUPT	93–02	F	1	10292597
42.	10–M27	1.270	SUPPORT, RAD LWR (PART OF 40)	93–02	F	1	10231933
43.	10–M27	1.263	PANEL, F/END (PART OF 40)	93–02	F	LH	10150235
44.	10–M27	1.263	PANEL, F/END (PART OF 40)	93–02	F	RH	10150234
45.		N.S.	PANEL, F/CMPT FRT (PART OF 40)				
46.		N.S.	BAR, F/END UPR TIE (PART OF 40)				
47.		N.S.	SUPPORT, HOOD ADJ FRT BPR (PART OF 40)				
48.		N.S.	SUPPORT, HOOD ADJ FRT BPR (PART OF 40)				
49.		N.S.	GUSSET, F/CMPT INR S/RL (PART OF 60)				
50.		N.S.	RAIL, F/CMPT INR SI (PART OF 60)				
51.		N.S.	BRACKET, DRIVETRAIN & FRT SUSP FRM (PART OF 60)				
52.	10–N13	7.009	EXTENSION, FRT BPR ENGY ABS E/CMPT S/RL (PART OF 60)	93–02	F	RH	10273672
53.		N.S.	RAIL, F/CMPT OTR SI (PART OF 60)				
54.		N.S.	NUT, FRT STAB SHF BRKT (PART OF 60)				
55.	10–N13	7.006	BRACE, F/CMPT INR S/RL RR (PART OF 60)	93–02	F	RH	10292611
56.		N.S.	REINFORCEMENT, F/CMPT S/RL AT DA (PART OF 60)				
57.		N.S.	REINFORCEMENT, F/CMPT INR S/RL (PART OF 60)				
58.		N.S.	REINFORCEMENT, F/CMPT OTR S/RL (PART OF 60)				
59.		N.S.	REINFORCEMENT, F/CMPT S/RL CTR (PART OF 60)				
60.	10–N13	7.006	RAIL, F/CMPT SI (INCLS 49–59)	93–02	F	RH	10273780
61.		N.S.	PANEL, FRT W/H RR (INCL 67) (PART OF 67)				

cardiagn.com

62.		N.S.	PANEL, FRT W/H CTR (PART OF 67)				
63.	10–N15	8.153	PANEL, FRT W/H FRT (PART OF 67)	93–98	F	RH	12458776
	10–N15	8.153	PANEL, FRT W/H FRT (PART OF 67)	98–02	F	RH	10296364
64.		N.S.	REINFORCEMENT, FRT W/H CTR PNL (PART OF 67)				
65.		N.S.	BRACKET, HOOD STRUT (PART OF 67)				
66.		N.S.	BRACKET, ECM (PART OF 67)				
67.	10–N15	8.153	PANEL KIT, FRT W/H (INCLS 61–66)	93–97	F	RH	12521580
	10–N15	8.153	PANEL KIT, FRT W/H (INCLS 61–66)	93–97	F	LH	12533903
	10–N15	8.153	PANEL KIT, FRT W/H (INCLS 61–66)	98–02	F	RH	12369528
	10–N15	8.153	PANEL KIT, FRT W/H (INCLS 61–66)	98–02	F	LH	12369529
68.		N.S.	RAIL, FRT W/H PNL UPR INR SI (*KIT2)				
69.	10–N13	7.006	RAIL, F/CMPT FRT OTR SI	93–02	F	RH	10242502
70.	10–N17	10.256	COVER, I/P NUT ACC HOLE	93–02	F	2	10191871
71.		8.977	SCREW, HWH TAP W/FL WA M6.3X1.81X25 POR (SERVICE ONLY) (*KIT1, KIT2)	93–02		AR	11505023
72.	10–N13	7.006	WASHER, FRT W/H PNL UPR INR S/RL (*KIT1, KIT2)	93–02	F	AR	12520407
73.	10–N15	8.153	NUT, FRT W/H PNL (M6.3 X 1.81) (*KIT1, KIT2) (2.485)	93–02	F	6	10079170

SERVICE KITS

1.	10–N13	7.006	RAIL KIT, FRT W/H PNL UPR SI (INCLS 35, 71, 72, 73)	93–02	F	LH	12521403
2.	10–N13	7.006	RAIL KIT, FRT W/H PNL UPR SI (INCLS 68, 71, 72, 73)	93–02	F	RH	12521402

cardiagn.com

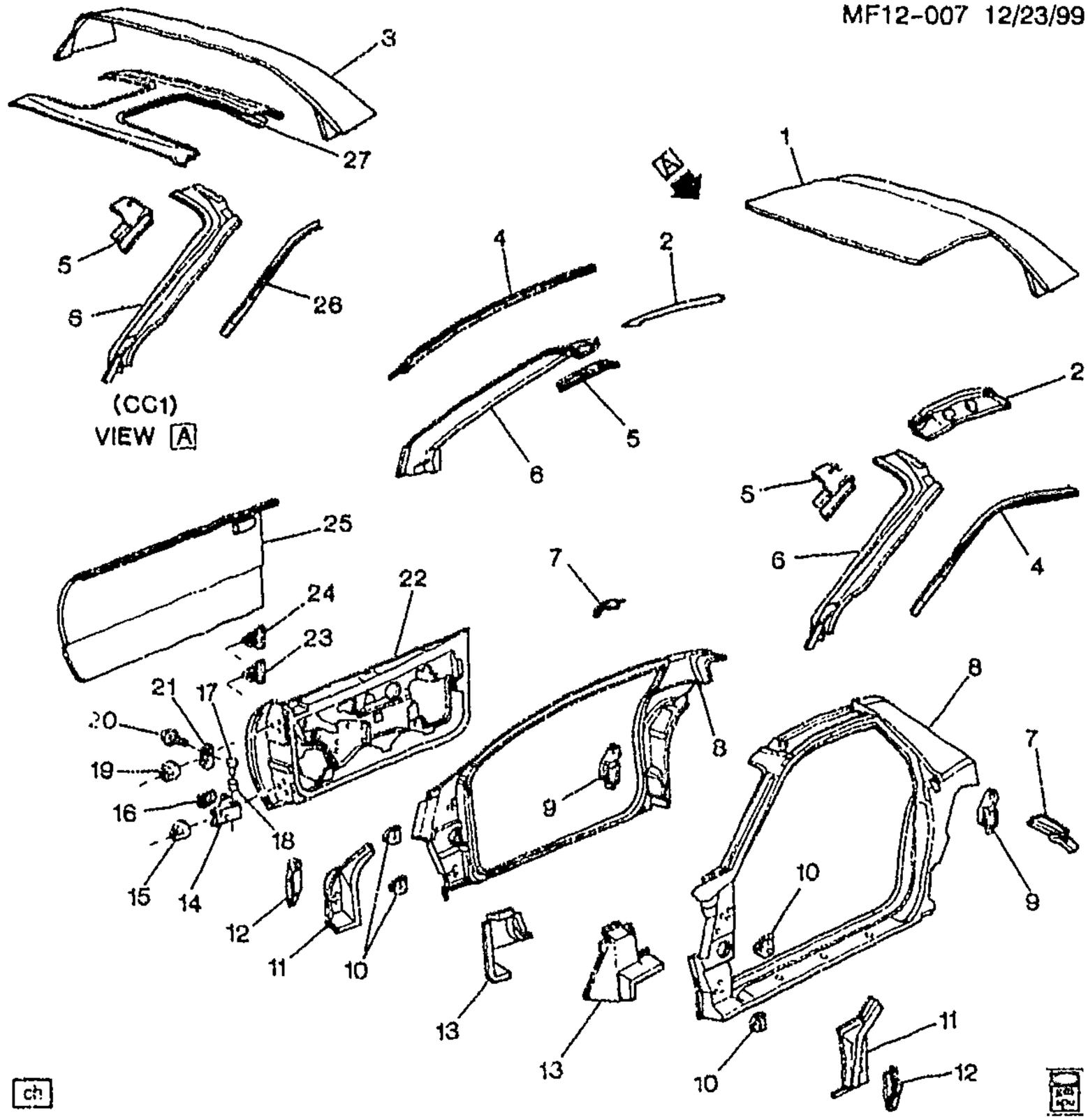

MF12-007

1993-2002 F87 SHEET METAL/BODY PART 2-DOOR & ROOF

1.	10-A19	12.810	PANEL, RF	93-02	F87 (EXC CC1)	1	10253596
2.	10-A26	12.957	RAIL, RF INR SI	93-02	F87 (EXC CC1)	RH	10282725
	10-A26	12.957	RAIL, RF INR SI	93-02	F87 (EXC CC1)	LH	10282726
3.	10-A19	12.810	PANEL, RF RR (PAINT TO MATCH)	93-02	F (CC1)	1	10254708
4.	10-N16	10.027	SUPPORT, W/S	93-02	F87 (EXC CC1)	RH	10150290
	10-N16	10.027	SUPPORT, W/S	93-02	F87 (EXC CC1)	LH	10150291
5.		N.S.	BRACE, W/S LWR INR SI FRM (PART OF 6)				
6.	10-A18	12.807	FRAME, W/S INR SI (INCLS 5)	93-96	F		12515653
	10-A18	12.807	FRAME, W/S INR SI (INCLS 5)	00-02	F		10276912
7.		N.S.	BRACE, R/WDO PNL				
8.	10-N20	10.695	FRAME, FRT S/D OPG (10.351)	93	F	RH	12525868
	10-N20	10.695	FRAME, FRT S/D OPG (10.351)	93	F	LH	12525869
	10-N20	10.695	FRAME, FRT S/D OPG (10.351)	94-02	F87	RH	12525868
	10-N20	10.695	FRAME, FRT S/D OPG (10.351)	94-02	F87	LH	12525869

cardiagn.com

9.	10-N20	10.571	RETAINER, FRT S/D LK STKR ANC PLT	93-02	F	RH	10211193
	10-N20	10.571	RETAINER, FRT S/D LK STKR ANC PLT	93-02	F	LH	10211194
10.		N.S.	PLATE, FRT S/D HGE ANC (BODY SI) (PART OF 11)				
11.	10-A18	12.659	REINFORCEMENT, FRT S/D UPR HGE (BODY SI) (INCLS 10)	93-02	F	RH	10245034
	10-A18	12.659	REINFORCEMENT, FRT S/D UPR HGE (BODY SI) (INCLS 10)	93-02	F	LH	10245035
12.	10-A18	12.659	PLATE, FRT S/D UPR HGE ANC (BODY SI)	93-02	F	RH	10231715
	10-A18	12.659	PLATE, FRT S/D UPR HGE ANC (BODY SI)	93-02	F	LH	10231716
13.	10-A18	12.659	REINFORCEMENT, FRT S/D LWR HGE (BODY SI)	93-02	F	RH	10286188
	10-A18	12.659	REINFORCEMENT, FRT S/D LWR HGE (BODY SI)	93-02	F	LH	10286189
14.	10-N18	10.454	HINGE, FRT S/D LWR (INCLS 16, 17, 18) (W/O SPRING)	93-02	F	RH	16626998
	10-N18	10.454	HINGE, FRT S/D LWR (INCLS 16, 17, 18) (W/O SPRING)	93-02	F	LH	16631043
15.	10-N18	10.454	NUT, FRT S/D LWR HGE (DR SI) (4.647)	93-02	F87	4	25523369
16.	10-N18	10.455	SPRING, FRT S/D LWR HGE (PART OF 14)	93-02	F	2	20300149
17.	10-N18	10.455	PIN, FRT S/D CHK LINK (PART OF 14)	93-02	F	2	20262500
18.	10-N18	10.455	ROLLER, FRT S/D CHK LINK (PART OF 14) (W/BUSH, LUB & ROLLER) (MAY REQUIRE LUBE P/N 1050109 TO EASE INSTALLATION)	93-02	F	2	20058035
19.		8.900	BOLT ASM-M10X1.5X30, 25 THD, 20 OD, 10.9, 7114M (FRT S/D UPR DR SI HGE)	93-02		AR	11516918
20.		8.900	BOLT, 10X1 5X25, 9.5, PC (FRT S/D HGE (BODY SI))	93		AR	2056550
		8.800	SEALANT (TRANS BOLT) (1.097)	93		AR	12345493
		8.900	BOLT, HEX W/CON WA M10X1.5X30 9.8 POR 20-OD FULL THD (FRT S/D HGE (BODY SI))	94-02		8	11508897
21.	10-N18	10.450	HINGE, FRT S/D UPR	93-94	F	LH	16626519
	10-N18	10.450	HINGE, FRT S/D UPR	93-02	F	RH	16630874
	10-N18	10.450	HINGE, FRT S/D UPR	93-02	F	LH	16630875
22.	10-N18	10.351	DOOR, FRT SI (INCLS 25) (LESS HGE)	93-02	F	RH	10274371
	10-N18	10.351	DOOR, FRT SI (INCLS 25) (LESS HGE)	93-02	F	LH	10274372
23.	10-N18	10.454	PLATE, FRT S/D LWR HGE ANC (DR SI)	93-02	F	RH	10215358
	10-N18	10.454	PLATE, FRT S/D LWR HGE ANC (DR SI)	93-02	F	LH	10215359
24.	10-N18	10.450	PLATE, FRT S/D UPR DR SI HGE ANC	93-02	F	RH	10268960
	10-N18	10.450	PLATE, FRT S/D UPR DR SI HGE ANC	93-02	F	LH	10268961

cardiagn.com

							MF12–007
25.	10–A23	12.895	PANEL, FRT S/D OTR (PART OF 22)	93–02	F	RH	10250650
	10–A23	12.895	PANEL, FRT S/D OTR (PART OF 22)	93–02	F	LH	10250651
26.	10–N16	10.027	SUPPORT, W/S	93–02	F87 (CC1)	RH	10242691
	10–N16	10.027	SUPPORT, W/S	93–02	F87 (CC1)	LH	10242692
27.	10–A19	12.810	PANEL, RF	93–02	F87	1	10253596
	10–A19	12.810	PANEL, RF	93–02	F87	1	10262549

RPO DEFINITIONS
CC1 – ROOF,HATCH,REMOVABLE PANELS,GLASS

cardiagn.com

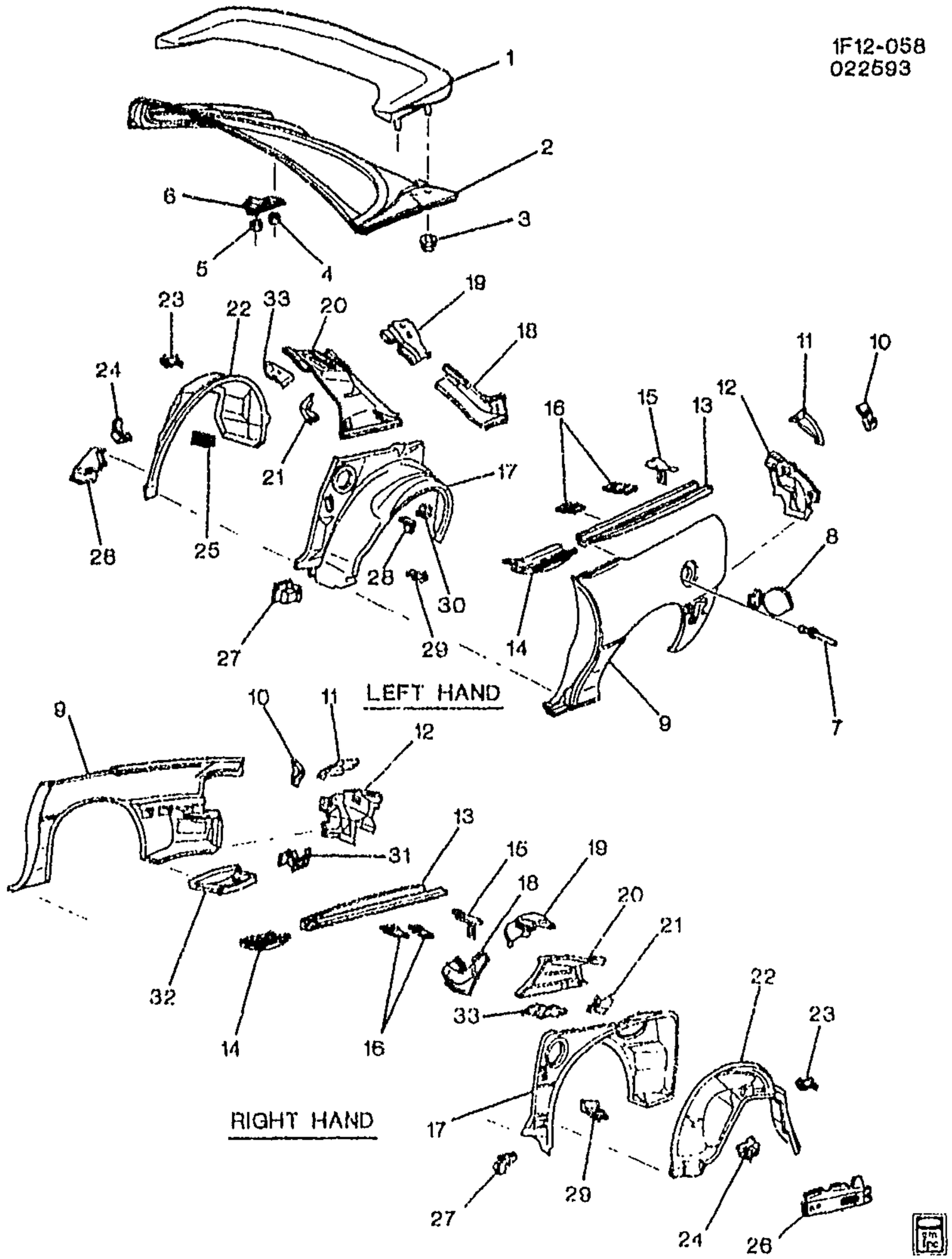

1F12-058

1993-2002 F87 SHEET METAL/BODY PART 3-RR QUARTER & LIFTGATE

1.	10-A11	12.181	SPOILER, R/END	93-02	F (EXC T2H)	1	10253518
	10-A11	12.181	SPOILER, R/END	93-02	F (T2H) (EXPORT)	1	10253519
2.	10-A11	12.181	PANEL, R/CMPT L/WDO	93-02	FP87	1	10255116
3.		8.917	NUT, HEX W/CON WA 6X1X5.5	93-02		4	11517283

cardiagn.com

							1F12-056
4.		8.917	NUT, HFH, M8X1.25, 17.9 OD, 738 THK, 13MM HEX, 10, ZF (R/CMPT L/WDO WDO SI HGE) (8.915) (AC-DELCO #11514596)	93-02	.....	4	11514596
5.		8.917	NUT, HFH, M8X1.25, 17.9 OD, 738 THK, 13MM HEX, 10, ZF (R/CMPT L/WDO BODY SI HGE) (8.915) (AC-DELCO #11514596)	93-02	.....	4	11514596
6.	10-A12	12.184	HINGE, R/CMPT L/WDO	93-02	F87	2	10150216
7.		8.967	RIVET, BLIND LG DOME, 1/8X0.255, 0.129- 0.133HOLE, 0.063-0.125 GRIP, 0.375 HD ODSTL, PZOR (F/TNK FIL DR HGE)	93-02	.....	4	9441669
8.	10-A25	12.945	DOOR, F/TNK FIL	93-97	F	1	16629244
	10-A25	12.945	DOOR, F/TNK FIL	98-02	F	1	10284454
9.	10-A23	12.940	PANEL, QTR OTR (INCLS 10-14, 31)	93-02	F87	RH	12512748
	10-A23	12.940	PANEL, QTR OTR (INCLS 10-14, 31)	93-95	F87	LH	12512749
	10-A23	12.940	PANEL, QTR OTR (INCLS 10-14, 31) (USE W/VALVE 10281903) ...	96-02	F87	LH	12369981
10.	10-A15	12.212	REINFORCEMENT, R/CMPT L/WDO BPR R/END PNL (PART OF 9)	93-02	F	RH	10132316
	10-A15	12.212	REINFORCEMENT, R/CMPT L/WDO BPR R/END PNL (PART OF 9)	93-02	F	LH	10132317
11.	10-A23	12.940	EXTENSION, QTR OTR PNL UPR RR (PART OF 9)	93-02	F	RH	10235568
	10-A23	12.940	EXTENSION, QTR OTR PNL UPR RR (PART OF 9)	93-02	F	LH	10235569
12.	10-A23	12.940	EXTENSION, QTR OTR PNL LWR RR (PART OF 9)	93-02	F	RH	10285693
	10-A23	12.940	EXTENSION, QTR OTR PNL LWR RR (PART OF 9)	93-02	F	LH	10285694
13.	10-A23	12.940	EXTENSION, QTR OTR PNL (TO R/WDO DRN PNL) (PART OF 9) ..	93-02	F87	RH	10406354
	10-A23	12.940	EXTENSION, QTR OTR PNL (TO R/WDO DRN PNL) (PART OF 9) ..	93-02	F87	LH	10406355
14.	10-A23	12.940	EXTENSION, QTR OTR PNL UPR FRT (PART OF 9)	93-02	F87	RH	10406352
	10-A23	12.940	EXTENSION, QTR OTR PNL UPR FRT (PART OF 9)	93-02	F87	LH	10406353
15.	10-N23	15.100	SUPPORT, QTR LWR TR FIN PNL (RR)	93-02	F	LH	10191815
	10-N23	15.100	SUPPORT, QTR LWR TR FIN PNL (RR)	93-02	F	RH	10191814
16.	10-N23	15.100	SUPPORT, QTR LWR TR FIN PNL (FRT)	93-02	F87	LH	10191855
	10-N23	15.100	SUPPORT, QTR LWR TR FIN PNL (FRT)	93-02	F87	RH	10191854
17.	10-A24	12.941	PANEL, QTR INR & RR W/H (OTR)	93-02	F87	RH	10401925
	10-A24	12.941	PANEL, QTR INR & RR W/H (OTR)	93-02	F87	LH	10401926
18.	10-A25	12.944	REINFORCEMENT, QTR INR & RR W/H PNL	93-02	F87	RH	10244384

cardiagn.com

							1F12-058
	10-A25	12.944	REINFORCEMENT, QTR INR & RR W/H PNL	93-02	F87	LH	10244385
19.		N.S.	REINFORCEMENT, RF INR S/RL F/SEAT BELT RETR (PART OF 20)				
20.	10-A24	12.941	PANEL, QTR INR UPR (INCLS 19, 21)	93-02	F87	RH	10246501
	10-A24	12.941	PANEL, QTR INR UPR (INCLS 19, 21)	93-02	F87	LH	10246502
21.		N.S.	BRACKET, R/CMPT L/WDO STRUT (BODY SI) (PART OF 20)				
22.	10-A25	12.944	PANEL, RR W/H INR (INCLS 23, 24, 25)	93-02	F87	RH	12532484
23.		N.S.	BRACKET, R/SEAT SHLDR BELT RETR (PART OF 22)				
24.		N.S.	SUPPORT, R/SEAT BK CUSH LK STKR (PART OF 22)				
25.		N.S.	BRACKET, EVAP EMIS CNSTR HARN (PART OF 22)				
26.	10-A24	12.942	BRACE, BODY L/PLR (TO W/H)	93-02	F87	RH	10273485
	10-A24	12.942	BRACE, BODY L/PLR (TO W/H)	93-02	F87	LH	10273486
27.	10-A25	12.944	EXTENSION, RR W/H OTR PNL	93-02	F	RH	10191802
	10-A25	12.944	EXTENSION, RR W/H OTR PNL	93-02	F	LH	10191803
28.	10-N11	3.003	BRACKET, F/TNK FIL PIPE SHLD UPR	93-02	F	1	20278773
29.	10-N13	7.831	BRACKET, RR BPR FASCIA SI FRT	93-02	F	RH	10178066
	10-N13	7.831	BRACKET, RR BPR FASCIA SI FRT	93-02	F	LH	10178067
30.	10-N11	3.003	BRACKET, F/TNK FIL PIPE SHLD RR (12.945)	93-02	F	1	20274857
31.		N.S.	RETAINER, SPA WHL STOW (PART OF 9)				
32.	10-A27	12.981	POCKET, SPA WHL	93-02	F	1	10156361
33.	10-A24	12.941	REINFORCEMENT, QTR INR UPR PNL	93-02	F87 (CC1)	RH	10235590
	10-A24	12.941	REINFORCEMENT, QTR INR UPR PNL	93-02	F87 (CC1)	LH	10235591

RPO DEFINITIONS
CC1 -- ROOF,HATCH,REMOVABLE PANELS,GLASS
T2H – ORNAMENTATION,UNIQUE REQUIREMENTS(EXPORT)

cardiagn.com

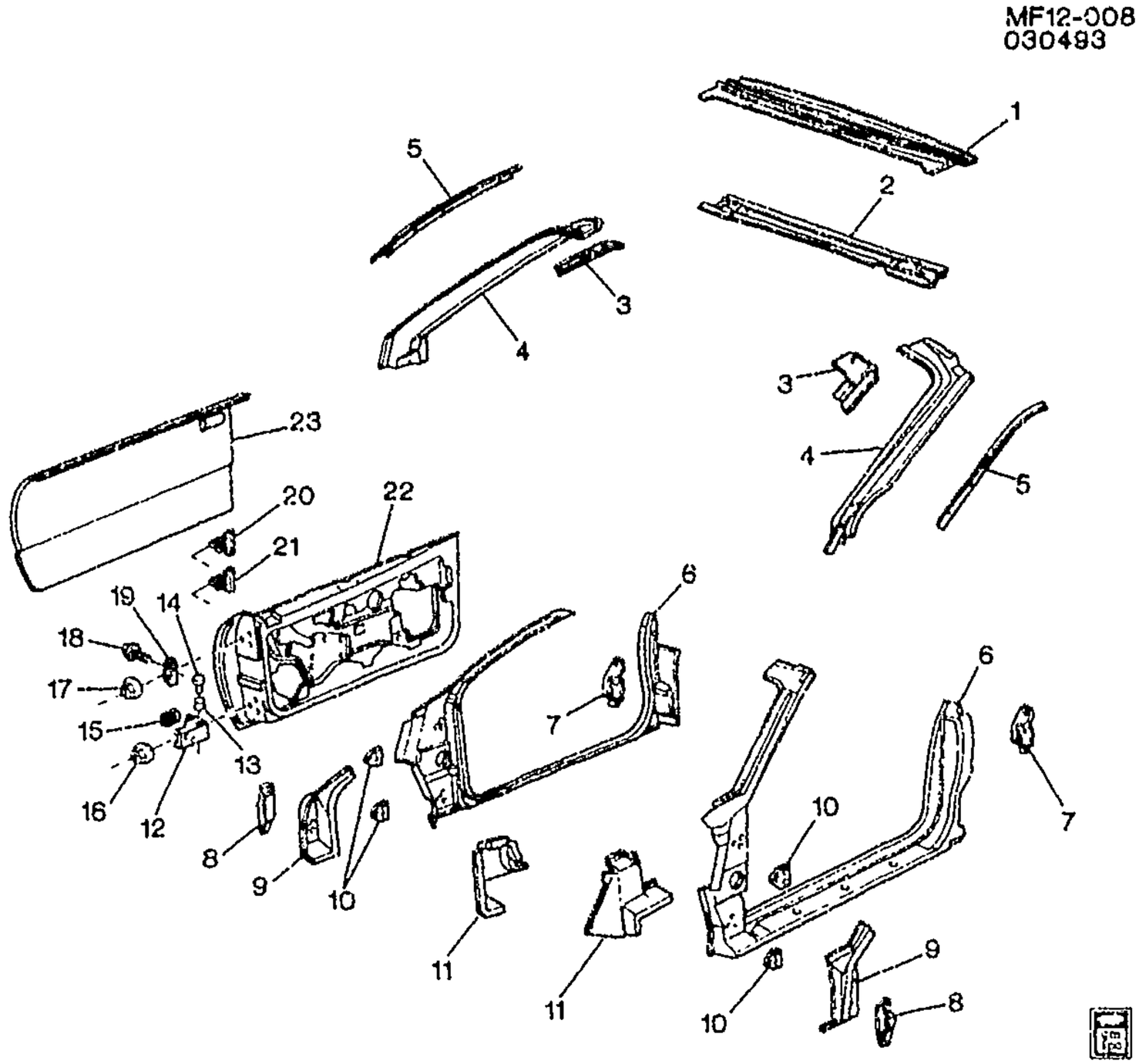

MF12–008

1994–2002 F67 SHEET METAL/BODY PART 2–DOOR & ROOF

1.	10–A18	12.807	FRAME, W/S OTR UPR	94–02	F67	1	10273409
2.	10–A18	12.807	FRAME, W/S INR SI	94–02	F67	1	10276912
3.		N.S.	BRACE, W/S LWR INR SI FRM				
4.	10–A18	12.807	FRAME, W/S INR SI	94–02	F	RH	12515652
	10–A18	12.807	FRAME, W/S INR SI	94–02	F	LH	12515653
	10–A18	12.807	FRAME, W/S INR SI	94–02	F67	1	10276912
5.	10–N16	10.027	SUPPORT, W/S	94–02	F67	RH	10242691
	10–N16	10.027	SUPPORT, W/S	94–02	F67	LH	10242692
6.	10–N20	10.695	FRAME, FRT S/D OPG (10.351)	94–02	F67	RH	12529165
	10–N20	10.695	FRAME, FRT S/D OPG (10.351)	94–02	F67	LH	12529166
7.	10–N20	10.571	RETAINER, FRT S/D LK STKR ANC PLT	94–02	F	RH	10211193
	10–N20	10.571	RETAINER, FRT S/D LK STKR ANC PLT	94–02	F	LH	10211194
8.	10–A18	12.659	PLATE, FRT S/D UPR HGE ANC (BODY SI)	94–02	F	RH	10231715
	10–A18	12.659	PLATE, FRT S/D UPR HGE ANC (BODY SI)	94–02	F	LH	10231716
9.	10–A18	12.659	REINFORCEMENT, FRT S/D UPR	94–02	F	RH	10245034

cardiagn.com

	10-A18	12.659	REINFORCEMENT, FRT S/D UPR HGE (BODY SI)	94-02	F	LH	10245035
10.		N.S.	PLATE, FRT S/D HGE ANC (BODY SI) (PART OF 11)				
11.	10-A18	12.659	REINFORCEMENT, FRT S/D LWR HGE (BODY SI) (INCLS 10)	94-02	F	RH	10286188
	10-A18	12.659	REINFORCEMENT, FRT S/D LWR HGE (BODY SI) (INCLS 10)	94-02	F	LH	10286189
12.	10-N18	10.454	HINGE, FRT S/D LWR (INCLS 13, 14) (W/O SPRING)	94-02	F	RH	16628998
	10-N18	10.454	HINGE, FRT S/D LWR (INCLS 13, 14) (W/O SPRING)	94-02	F	LH	16631043
13.	10-N18	10.455	ROLLER, FRT S/D CHK LINK (PART OF 12) (W/BUSH, LUB & ROLLER) (MAY REQUIRE LUBE P/N 1050109 TO EASE INSTALLATION)	94-02	F	2	20058035
14.	10-N18	10.455	PIN, FRT S/D CHK LINK (PART OF 12)	94-02	F	2	20262500
15.	10-N18	10.455	SPRING, FRT S/D LWR HGE	94-02	F	2	20300149
16.	10-N18	10.454	NUT, FRT S/D LWR HGE (DR SI) (4.647)	94-02	F	4	25523369
17.	10-N18	10.463	NUT, FRT S/D UPR DR SI HGE (4.647)	94-02	F	6	25523369
18.		8.900	BOLT, HEX W/CON WA M10X1.5X30 9.8 POR 20-OD FULL THD (FRT S/D HGE (BODY SI))	94-02		8	11508897
19.	10-N18	10.450	HINGE, FRT S/D UPR	94	F	LH	16626519
	10-N18	10.450	HINGE, FRT S/D UPR	94-02	F	RH	16630874
	10-N18	10.450	HINGE, FRT S/D UPR	94-02	F	LH	16630875
20.	10-N18	10.450	PLATE, FRT S/D UPR DR SI HGE ANC (MUST ALSO USE #16630874 HINGE)	94-02	F	RH	10268960
	10-N18	10.450	PLATE, FRT S/D UPR DR SI HGE ANC	94-02	F	LH	10268961
21.	10-N18	10.454	PLATE, FRT S/D LWR HGE ANC (DR SI)	94-02	F	RH	10215358
	10-N18	10.454	PLATE, FRT S/D LWR HGE ANC (DR SI)	94-02	F	LH	10215359
22.	10-N18	10.351	DOOR, FRT SI (INCLS 23) (LESS HGE)	94-02	F	RH	10274371
	10-N18	10.351	DOOR, FRT SI (INCLS 23) (LESS HGE)	94-02	F	LH	10274372
23.	10-A23	12.895	PANEL, FRT S/D OTR (PART OF 22)	94-02	F	RH	10250650
	10-A23	12.895	PANEL, FRT S/D OTR (PART OF 22)	94-02	F	LH	10250651

cardiaco.com

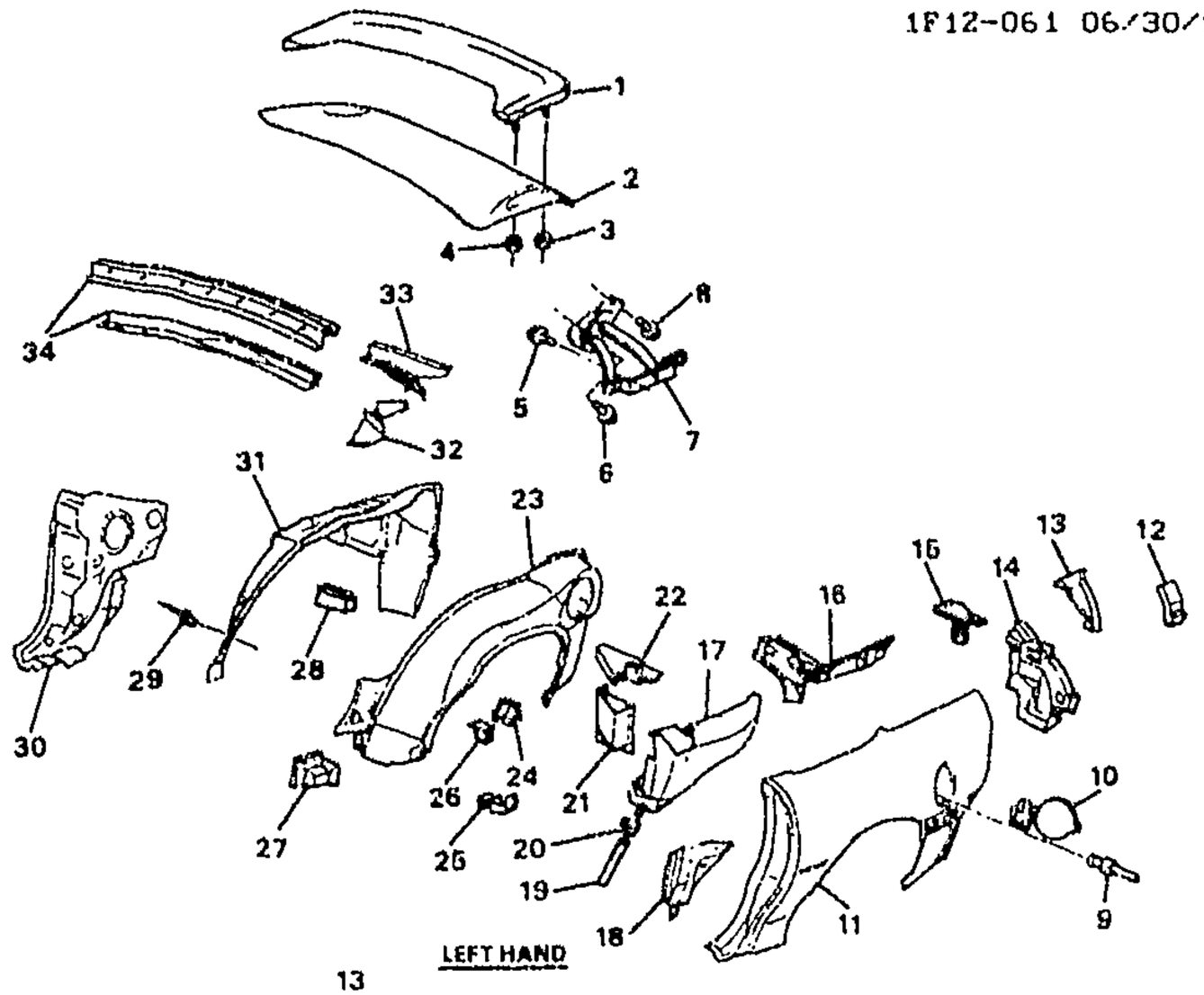

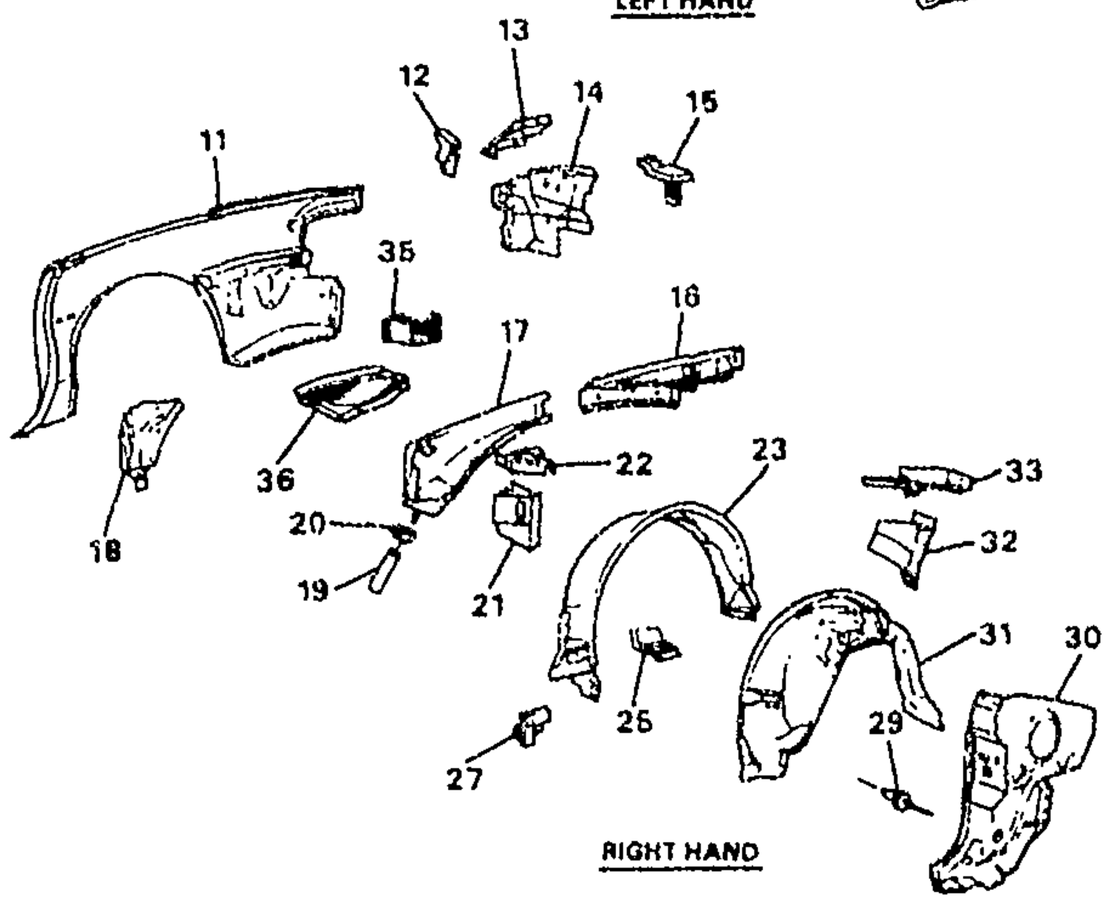

1F12-061

1994-2002 F67 SHEET METAL/BODY PART 3--RR QUARTER & DECKLID

1.	10-A11	12.181	SPOILER, R/END	94-02	F (EXC T2H)	1	10253518
	10-A11	12.181	SPOILER, R/END	94-02	F (T2H) (EXPORT)	1	10253519
2.	10-A11	12.181	PANEL, R/CMPT LID	94-02	F67	1	10258597
3.		8.917	NUT, HEX W/CON WA M6X1X5.5, 24-OD 9 PEOR (R/END SPLR) (8.915)	94-02		2	11508388

cardiagn.com

4.		8.917	NUT, HEX W/CON WA M6X1X5.5, 24-OD 9 PEOR (R/END SPLR) (8.915)	94-02		2	11508388
5.	10-A12	12.184	BOLT, R/CMPT LID HGE	94-02	F67	4	10223901
6.	10-A12	12.184	BUMPER, R/CMPT LID HGE ADJ BOLT	94-02	F67	2	10253234
7.	10-A12	12.184	HINGE, R/CMPT LID	94-02	F67	RH	10257986
	10-A12	12.184	HINGE, R/CMPT LID	94-02	F67	LH	10257987
8.		8.900	BOLT-HEX, M8X1.25X30, 22 THD, 24MM OD, 9.8, 7114M (R/CMPT LID HGE)	94-02		4	11516594
9.		8.967	RIVET, BLIND LG DOME, 1/8X0.255, 0.129- 0.133HOLE, 0.063-0.125 GRIP, 0.375 HD ODSTL, PZOR (F/TNK FIL DR HGE)	94-02		4	9441669
10.	10-A25	12.945	DOOR, F/TNK FIL	94-97	F	1	16629244
	10-A25	12.945	DOOR F/TNK FIL	98-02	F	1	10284454
11.	10-A23	12.940	PANEL, QTR OTR (INCLS 12-17, 35)	94-02	F	RH	12529167
	10-A23	12.940	PANEL, QTR OTR (INCLS 12-17) (USE W/VALVE 10281903)	94-02	F	LH	12369983
12.	10-A15	12.212	REINFORCEMENT, R/CMPT L/WDO BPR R/END PNL (PART OF 11)	94-02	F	RH	10132316
	10-A15	12.212	REINFORCEMENT, R/CMPT L/WDO BPR R/END PNL (PART OF 11)	94-02	F	LH	10132317
13.	10-A23	12.940	EXTENSION, QTR OTR PNL UPR RR (PART OF 11)	94-02	F	RH	10235568
	10-A23	12.940	EXTENSION, QTR OTR PNL UPR RR (PART OF 11)	94-02	F	LH	10235569
14.	10-A23	12.940	EXTENSION, QTR OTR PNL LWR RR (PART OF 11)	94-02	F	RH	10285693
	10-A23	12.940	EXTENSION, QTR OTR PNL LWR RR (PART OF 11)	94-02	F	LH	10285694
15.	10-N23	15.100	SUPPORT, QTR LWR TR FIN PNL (RR) (PART OF 11)	94-02	F	RH	10191814
	10-N23	15.100	SUPPORT, QTR LWR TR FIN PNL (RR) (PART OF 11)	94-02	F	LH	10191815
16.	10-A26	12.971	EXTENSION, R/WDO PNL (PART OF 11)	94-02	F67	LH	10195327
	10-A26	12.971	EXTENSION, R/WDO PNL (PART OF 11)	94-02	F67	RH	10261414
17.	10-A23	12.940	REINFORCEMENT, QTR OTR PNL BELT (PART OF 11)	94-02	F67	RH	10195320
	10-A23	12.940	REINFORCEMENT, QTR OTR PNL BELT (PART OF 11)	94-02	F67	LH	10195321
18.	10-A24	12.941	REINFORCEMENT, QTR INR PNL	94-02	F67	RH	10195336
	10-A24	12.941	REINFORCEMENT, QTR INR PNL	94-02	F67	LH	10195337
19.	10-A26	12.971	HOSE, R/WDO DRN PNL DRN	94-02	F67	2	10243495
20.		8.948	CLAMP, 28.6-86.2 DIA WORM GEAR (R/WDO DRN PNL DRN HOSE) (AC-DELCO #12338017)	94-02		2	12338017
21.	10-N23	14.310	BRACKET, F/TOP PIV	94-02	F	RH	10195328
	10-N23	14.310	BRACKET, F/TOP PIV	94-02	F	LH	10195329

cardiagn.com

22.	10–N23	14.875	BRACKET, D/SEAT SHLDR BELT GDE	94–02	F67	1	10269637
	10–N23	14.875	BRACKET, P/SEAT SHLDR BELT GDE	94–02	F67	1	10269638
23.	10–A25	12.944	PANEL, RR W/H OTR	97–02	F67	RH	12532454
	10–A25	12.944	PANEL, RR W/H OTR	97–02	F67	LH	12532455
	10–A25	12.944	PANEL, RR W/H OTR (FASCIA ATCH HOLE MAY HAVE TO BE DRILLED)	94–96	F67	RH	12529178
	10–A25	12.944	PANEL, RR W/H OTR (FASCIA ATCH HOLE MAY HAVE TO BE DRILLED)	94–96	F67	LH	12529179
24.	10–N11	3.003	BRACKET, F/TNK FIL PIPE SHLD RR (12.945)	94–02	F	1	20274857
25.	10–N13	7.831	BRACKET, RR BPR FASCIA SI FRT	94–02	F	RH	10178066
	10–N13	7.831	BRACKET, RR BPR FASCIA SI FRT	94–02	F	LH	10178067
26.	10–N11	3.003	BRACKET, F/TNK FIL PIPE SHLD UPR	94–02	F	1	20278773
27.	10–A25	12.944	EXTENSION, RR W/H OTR PNL	94–02	F	RH	10191802
	10–A25	12.944	EXTENSION, RR W/H OTR PNL	94–02	F	LH	10191803
28.		N.S.	BRACKET, EVAP EMIS CNSTR HARN				
29.		8.967	RIVET–3/16X.430, STYLE 1C (BODY S/PNL)	94–02		2	9440392
30.	10–A24	12.942	REINFORCEMENT, BODY L/PLR	94–96	F67	RH	10262083
	10–A24	12.942	REINFORCEMENT, BODY L/PLR	94–96	F67	LH	10262084
	10–A24	12.942	REINFORCEMENT, BODY L/PLR	97–02	F67	RH	10276221
	10–A24	12.942	REINFORCEMENT, BODY L/PLR	97–02	F67	LH	10276222
31.	10–A25	12.944	PANEL, RR W/H INR	94–02	F67	RH	10212056
	10–A25	12.944	PANEL, RR W/H INR (INCL EVAP EMIS CNSTR)	94–02	F67	LH	10212057
32.	10–A26	12.964	BRACE, R/WDO DRN PNL	94–02	F67	LH	10262563
	10–A26	12.964	BRACE, R/WDO DRN PNL	94–02	F67	RH	10271636
33.	10–A26	12.964	REINFORCEMENT, R/WDO DRN PNL EXTN	94–02	F67	RH	10195368
	10–A26	12.964	REINFORCEMENT, R/WDO DRN PNL EXTN	94–02	F67	LH	10261141
34.	10–A26	12.971	PANEL, R/WDO DRN	94–02	F67	1	10272040
35.		N.S.	RETAINER, SPA WHL STOW				
36.	10–A27	12.981	POCKET, SPA WHL	94–02	F	1	10156361

RPO DEFINITIONS

T2H – ORNAMENTATION,UNIQUE REQUIREMENTS(EXPORT)

cardiagn.com

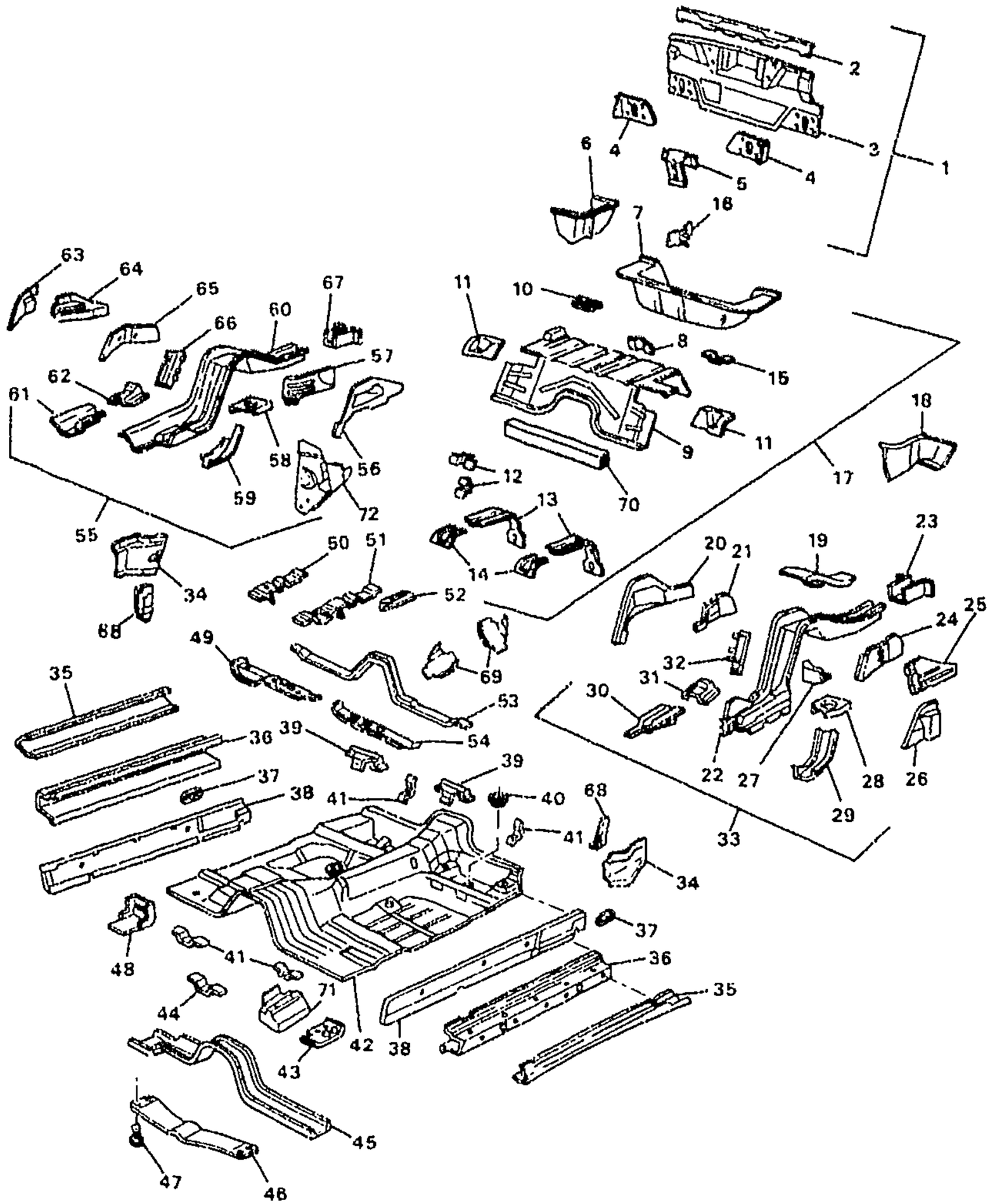

bk

MF12-0041

1994-2002 F87 SHEET METAL/BODY PART 4-UNDERBODY

1.	10-A26	12.966	PANEL, R/END (INCLUDES R/CMPT LID LK SUPT & RR BPR FASCIA BRKT) (INCLS 2-5)	94-02	F 1	12515662
2.		N.S.	BRACKET, RR BPR FASCIA (PART OF 1)		....	
3.		N.S.	PANEL, R/END (PART OF 1)		.....	

cardiagn.com

4.		N.S.	**REINFORCEMENT**, R/END PNL BPR SUPT (PART OF 1)				
5.		N.S.	**SUPPORT**, R/CMPT LID LAT (PART OF 1)	94			
	10-A15	12.237	**SUPPORT**, R/CMPT LID LAT (PART OF 1)	95-02	F	1	10402406
6.	10-A27	12.981	**FILLER**, R/CMPT FLR PNL (TO QTR OTR PNL)	94-02	F	RH	10264701
7.	10-A27	12.981	**PANEL**, R/CMPT RR (PART OF 17)	94-02	F	1	10178020
8.		N.S.	**PLATE**, SPA WHL STOW ANC (PART OF 17)				
9.		N.S.	**PANEL**, R/CMPT FRT (PART OF 17)				
10.	10-A19	12.810	**BRACKET**, RF LIFT OFF WDO STOW RET	94-99	F (AN4)	1	14098141
		N.S.	**BRACKET**, RF LIFT OFF WDO STOW RET	00-02			
11.		N.S.	**FILLER**, R/CMPT PNL RR S/ABS (PART OF 17)				
12.	10-N12	3.690	**BRACKET**, CTLTC CONV H/SHLD RR INR	94-02	F	3	20134572
13.		N.S.	**REINFORCEMENT**, F/TNK STRP (PART OF 17)				
14.		N.S.	**BRACKET**, F/TNK STRP (PART OF 17)				
15.	10-N12	3.690	**BRACKET**, CTLTC CONV H/SHLD (PART OF 17)	94-02	F	2	10297991
16.	10-A19	12.810	**BRACKET**, RF LIFT OFF PNL/WDO STOW RET	94-02	F (CC1)	2	10191846
17.	10-A27	12.981	**PANEL**, R/CMPT (INCLS 7-9, 11, 13-15, 70)	94-97	F	1	10297993
	10-A27	12.981	**PANEL**, R/CMPT (INCLS 7-9, 11, 13-15, 70)	98-02	F	1	10418823
18.	10-A27	12.981	**FILLER**, R/CMPT FLR PNL (TO QTR OTR PNL)	94-02	F	LH	10150259
19.		N.S.	**EXTENSION**, R/CMPT PNL LGTDNL RL (PART OF 33)				
20.		N.S.	**EXTENSION**, R/CMPT PNL LGTDNL RL (PART OF 33)				
21.		N.S.	**REINFORCEMENT**, R/CMPT PNL LGTDNL RL RR SPR ST INR (PART OF 33)				
22.		N.S.	**RAIL**, R/CMPT PNL LGTDNL (PART OF 33)				
23.		N.S.	**REINFORCEMENT**, R/CMPT PNL LGTDNL RL RR BPR IMP BAR (PART OF 33)				
24.		N.S.	**REINFORCEMENT**, R/CMPT PNL LGTDNL RL RR SPR ST OTR (PART OF 33)				
25.		N.S.	**EXTENSION**, R/CMPT PNL LGTDNL RL (PART OF 33)				
26.		N.S.	**BRACKET**, RR SUSP JOUNCE BPR (PART OF 33)				
27.		N.S.	**BRACKET**, R/AXL TIE ROD (PART OF 55)			LH	

cardiagn.com

	10-N13	5.418	**BRACKET**, R/AXL TIE ROD (PART OF 55)	94-02	F	RH	10245902
28.		N.S.	**REINFORCEMENT**, RR SPR ST (PART OF 33)				
29.		N.S.	**REINFORCEMENT**, R/CMPT FLR LGTDNL RL (PART OF 33)				
30.		N.S.	**REINFORCEMENT**, RR SUSP LWR CONT ARM (PART OF 33)				
31.		N.S.	**REINFORCEMENT**, R/CMPT FRT PNL LGTDNL RL (PART OF 33)				
32.		N.S.	**PLATE**, RR STAB SHF ANC (PART OF 33)				
33.	10-A27	12.986	**RAIL**, R/CMPT PNL LGTDNL (INCLS 19-32)	94-02	F	LH	10400604
34.	10-A24	12.942	**EXTENSION**, BODY L/PLR BR (TO W/H) (12 944)	94-02	F	RH	10141476
	10-A24	12.942	**EXTENSION**, BODY L/PLR BR (TO W/H) (12.944)	94-02	F	LH	10141477
35.	10-A23	12.934	**PANEL**, RKR OTR	94-02	F	RH	12529163
	10-A23	12.934	**PANEL**, RKR OTR	94-02	F	LH	12529164
36.	10-A23	12.934	**REINFORCEMENT**, RKR OTR PNL (INCLS 37)	94-02	F87	RH	10286194
	10-A23	12.934	**REINFORCEMENT**, RKR OTR PNL (INCLS 37)	94-02	F87	LH	10286195
37.		N.S.	**PLATE**, F/SEAT BELT ANC (PART OF 36)				
38.	10-A23	12.934	**PANEL**, RKR INR (INCLS 37)	94-02	F	RH	10401912
	10-A23	12.934	**PANEL**, RKR INR (INCLS 37)	94-02	F	LH	10401913
39.		N.S.	**PLATE**, R/SEAT CUSH ANC				
40.	10-A26	12.980	**PLUG**, FLR PNL DRN HOLE	94-02	F	12	10208798
41.		N.S.	**RETAINER**, BRK & FUEL PIPE				
42.		N.S.	**PANEL**, FLR				
43.		N.S.	**REINFORCEMENT**, FLR PNL #1 BAR				
44.	10-N12	3.616	**BRACKET**, EXH PIPE FRT H/SHLD (3.690)	94-02	F	1	20134572
45.		N.S.	**BAR**, FLR PNL #1				
46.	10-A26	12.980	**REINFORCEMENT**, FLR PNL AT TUN PNL (TO UNDERBODY BRKTS)	94-02	F87	1	10419512
47.		8.900	**BOLT**, HEX W/CONICAL WA, M8X1.25X30, 28.8 THD, 17 OD, 6 DG PT, 9.8, PE (FLR PNL CTR REINF)	94-02	F	4	11515659
48.		N.S.	**SUPPORT**, I/P CTR				
49.		N.S.	**BAR**, FLR PNL #2				
50.		N.S.	**REINFORCEMENT**, FLR PNL (PARK BRK LVR)				
51.		N.S.	**REINFORCEMENT**, FLR PNL (PARK BRK LVR)				
52.		N.S.	**BRACKET**, PARK BRK FRT CBL				
53.		N.S.	**BAR**, FLR PNL #3				
54.		N.S.	**BAR**, FLR PNL #2				
55.	10-A27	12.986	**RAIL**, R/CMPT PNL LGTDNL (INCLS 27, 56-67)	94-02	F	RH	10292630
56.		N.S.	**EXTENSION**, R/CMPT PNL LGTDNL RL (PART OF 55)				

cardiagn.com

57.		N.S.	**REINFORCEMENT**, R/CMPT PNL LGTDNL RL RR SPR ST INR (PART OF 55)					
58.		N.S.	**REINFORCEMENT**, RR SPR ST (PART OF 55)					
59.		N.S.	**REINFORCEMENT**, R/CMPT FLR LGTDNL RL (PART OF 55)					
60.		N.S.	**RAIL**, R/CMPT PNL LGTDNL (PART OF 55)					
61.		N.S.	**REINFORCEMENT**, RR SUSP LWR CONT ARM (PART OF 55)					
62.		N.S.	**REINFORCEMENT**, R/CMPT FRT PNL LGTDNL RL (PART OF 55)					
63.		N.S.	**BRACKET**, RR SUSP JOUNCE BPR (PART OF 55)					
64.		N.S.	**EXTENSION**, R/CMPT PNL LGTDNL RL (PART OF 55)					
65.		N.S.	**REINFORCEMENT**, R/CMPT PNL LGTDNL RL RR SPR ST OTR (PART OF 55)					
66.		N.S.	**PLATE**, RR STAB SHF ANC (PART OF 55)					
67.		N.S.	**REINFORCEMENT**, R/CMPT PNL LGTDNL RL RR BPR IMP BAR (PART OF 55)					
68.	10-N21	11.620	**SUPPORT**, R/SEAT BK CUSH PIV (ON WHL/HS)	94-02	F		RH	20334410
	10-N21	11.620	**SUPPORT**, R/SEAT BK CUSH PIV (ON WHL/HS)	94-02	F		LH	20334411
69.	10-N8	2.559	**CLIP**, I/P WRG HARN	94-02	F		AR	22591058
	10-N8	2.559	**CLIP**, I/P WRG HARN (8.965) (AC-DELCO #1839906)	94-95	F		2	1839906
	10-N8	2.559	**CLIP**, I/P WRG HARN (1/2 DIA HARD STL)	94-95	F87		AR	1864022
	10-N8	2.559	**CLIP**, I/P WRG HARN (ADHESIVE CORD CLIP)	96	F		4	15971423
	10-N8	2.559	**CLIP**, I/P WRG HARN (ADHESIVE CORD CLIP)	97-02	F87		4	15971423
70.		N.S.	**BAR**, R/CMPT PNL FRT CR (PART OF 17)					
71.	10-N12	3.163	**PROTECTOR**, FUEL FEED & EVAP EMIS & RTN PIPE (NOT USED IN 1998)	94-97	F		2	10232676
	10-N11	3.145	**PROTECTOR**, FUEL FEED & EVAP EMIS & RTN PIPE (NOT USED IN 1998) (3.163)	94-97	F		2	10232676
72.	10-N13	5.418	**BRACKET**, R/AXL TIE ROD	94-02	F		RH	10245902

RPO DEFINITIONS
AN4 - RESTRAINT PROVISIONS,CHILD(CANADIAN)
CC1 - ROOF,HATCH,REMOVABLE PANELS,GLASS

cardiagn.com

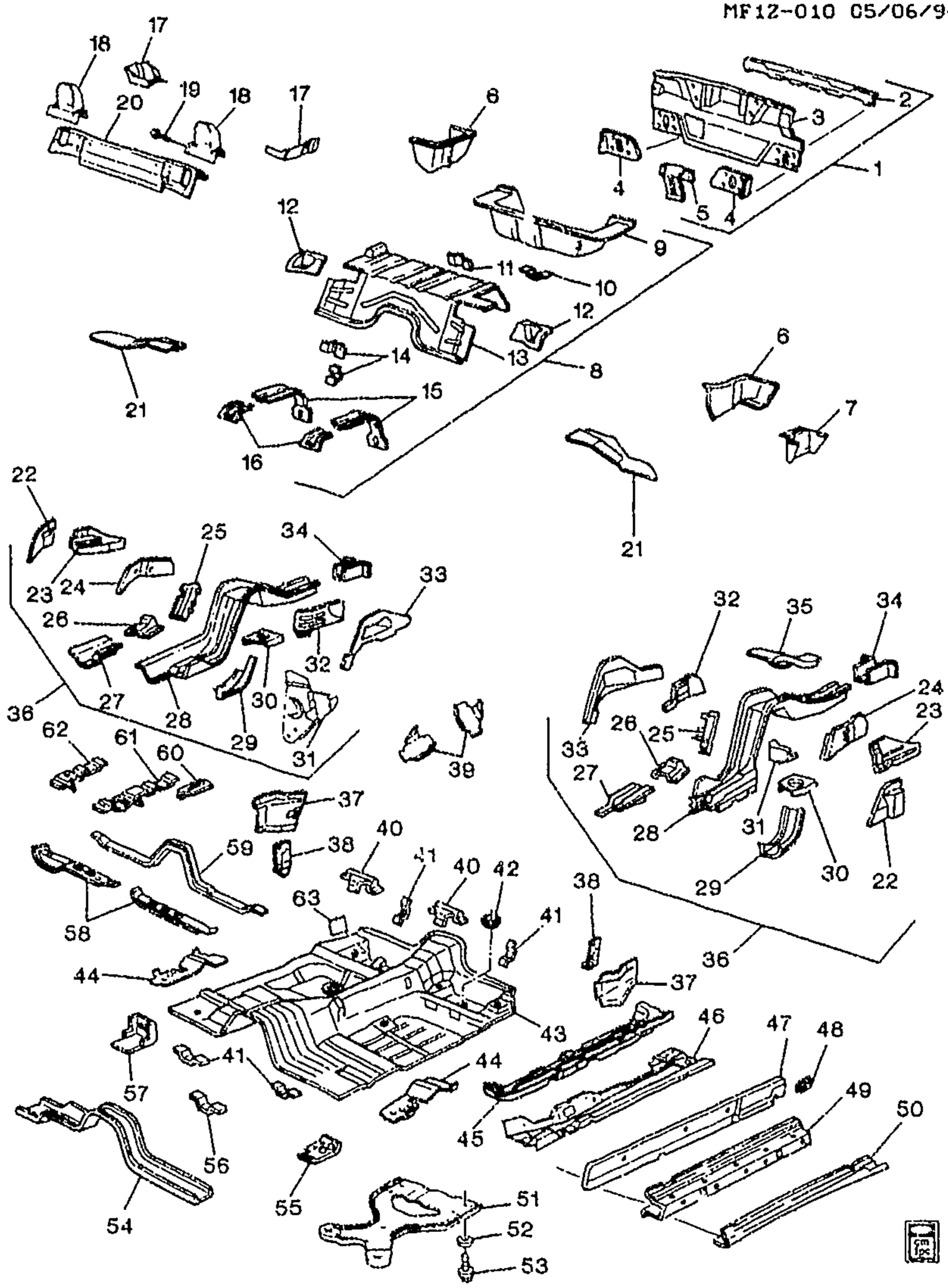

MF12-010

1994-2002 F67 SHEET METAL/BODY PART 4-UNDERBODY

1.	10-A26	12.966	PANEL, R/END (INCLUDES R/CMPT LID LK SUPT & RR BPR FASCIA BRKT) (INCLS 2-4)	94-02 F	1	12515662
2.		N.S.	BRACKET, RR BPR FASCIA	.....		

cardiagn.com

3.		N.S.	PANEL, R/END (PART OF 1)				
4.		N.S.	REINFORCEMENT, R/END PNL BPR SUPT (PART OF 1)				
5.	10-A15	12.237	SUPPORT, R/CMPT LID LAT	94	F67	1	10402406
	10-A15	12.237	SUPPORT, R/CMPT LID LAT	95-02	F	1	10402406
6.	10-A27	12.981	FILLER, R/CMPT FLR PNL (TO QTR OTR PNL)	94-02	F	LH	10150259
	10-A27	12.981	FILLER, R/CMPT FLR PNL (TO QTR OTR PNL)	94-02	F	RH	10264701
7.	10-N23	14.482	BRACKET, F/TOP PUMP (TO BODY)	94-02	F67	1	10195371
8.	10-A27	12.981	PANEL, R/CMPT (INCLS 9-16)	94-97	F	1	10297993
	10-A27	12.981	PANEL, R/CMPT (INCLS 9-16)	98-02	F	1	10418823
9.	10-A27	12.981	PANEL, R/CMPT RR (PART OF 8)	94-02	F	1	10178020
10.	10-N12	3.690	BRACKET, CTLTC CONV H/SHLD (PART OF 8)	94-02	F	2	10297991
11.		N.S.	PLATE, SPA WHL STOW ANC (PART OF 8)				
12.		N.S.	FILLER, R/CMPT PNL RR S/ABS (PART OF 8)				
13.		N.S.	PANEL, R/CMPT FRT (PART OF 8)				
14.	10-N12	3.616	BRACKET, EXH PIPE FRT H/SHLD (PART OF 8) (3.690)	94-02	F	1	20134572
15.		N.S.	REINFORCEMENT, F/TNK STRP (PART OF 8)				
16.		N.S.	BRACKET, F/TNK STRP (PART OF 8)				
17.		N.S.	REINFORCEMENT, FLR PNL RR				
18.	10-N23	14.875	BRACKET, R/SEAT SHLDR BELT RETR	94-02	F67	RH	10280914
	10-N23	14.875	BRACKET, R/SEAT SHLDR BELT RETR	94-02	F67	LH	10280915
19.		8.900	BOLT, HEX W/CONICAL WA, M8X1 25X30, 28.8 THD, 17 OD, 6 DG PT, 9.8, PE (FLDG 2ND ST SHLDR BELT RETR)	94-02		12	11515659
20.	10-A25	12.944	BAR, R/CMPT FRT UPR CR	94-02	F67	1	10266577
21.	10-A27	12.981	EXTENSION, R/CMPT PNL FRT C/BAR	94-02	F67	RH	10195352
	10-A27	12.981	EXTENSION, R/CMPT PNL FRT C/BAR	94-02	F67	LH	10195353
22.		N.S.	BRACKET, RR SUSP JOUNCE BPR (PART OF 36)				
23.		N.S.	EXTENSION, R/CMPT PNL LGTDNL RL (PART OF 36)				
24.		N.S.	REINFORCEMENT, R/CMPT PNL LGTDNL RL RR SPR ST OTR (PART OF 36)				
25.		N.S.	PLATE, RR STAB SHF ANC (PART OF 36)				
26.		N.S.	REINFORCEMENT, R/CMPT FRT PNL LGTDNL RL (PART OF 36)				
27.		N.S.	REINFORCEMENT, RR SUSP LWR CONT ARM (PART OF 36)				
28.		N.S.	RAIL, R/CMPT PNL LGTDNL (PART OF 36)				

cardiagn.com

29.		N.S.	**REINFORCEMENT**, R/CMPT FLR LGTDNL RL (PART OF 36)				
30.		N.S.	**REINFORCEMENT**, RR SPR ST (PART OF 36)				
31.		N.S.	**BRACKET**, R/AXL TIE ROD (PART OF 36)			LH	
	10-N13	5.418	**BRACKET**, R/AXL TIE ROD (PART OF 36)	94-02	F	RH	10245902
32.		N.S.	**REINFORCEMENT**, R/CMPT PNL LGTDNL RL RR SPR ST INR (PART OF 36)				
33.		N.S.	**EXTENSION**, R/CMPT PNL LGTDNL RL (PART OF 36)				
34.		N.S.	**REINFORCEMENT**, R/CMPT PNL LGTDNL RL RR BPR IMP BAR (PART OF 36)				
35.		N.S.	**EXTENSION**, R/CMPT PNL LGTDNL RL (PART OF 36)				
36.	10-A27	12.986	**RAIL**, R/CMPT PNL LGTDNL (INCLS 22-35)	94-02	F	RH	10292630
	10-A27	12.986	**RAIL**, R/CMPT PNL LGTDNL (INCLS 22-35)	94-02	F	LH	10400604
37.	10-A24	12.942	**EXTENSION**, BODY L/PLR BR (TO W/H) (12.944)	94-02	F	RH	10141476
	10-A24	12.942	**EXTENSION**, BODY L/PLR BR (TO W/H) (12.944)	94-02	F	LH	10141477
38.	10-N21	11.620	**SUPPORT**, R/SEAT BK CUSH PIV (ON WHL/HS)	94-02	F	RH	20334410
	10-N21	11.620	**SUPPORT**, R/SEAT BK CUSH PIV (ON WHL/HS)	94-02	F	LH	20334411
39.	10-N8	2.559	**CLIP**, I/P WRG HARN	94-02	F	AR	22591058
	10-N8	2.559	**CLIP**, I/P WRG HARN (8.965) (AC-DELCO #1839906)	94-95	F	2	1839906
	10-N8	2.559	**CLIP**, I/P WRG HARN (ADHESIVE CORD CLIP)	96	F	4	15971423
	10-N8	2.559	**CLIP**, I/P WRG HARN (ADHESIVE CORD CLIP)	97-02	F67	3	15971423
40.		N.S.	**PLATE**, R/SEAT CUSH ANC				
41.		N.S.	**RETAINER**, BRK & FUEL PIPE				
42.	10-A26	12.980	**PLUG**, FLR PNL DRN HOLE	94-02	F	12	10208798
43.		N.S.	**PANEL**, FLR				
44.		N.S.	**REINFORCEMENT**, RKR INR PNL FRT				
45.		N.S.	**REINFORCEMENT**, RKR INR PNL				
46.	10-A23	12.934	**REINFORCEMENT**, RKR OTR PNL	94-02	F67	RH	10267188
	10-A23	12.934	**REINFORCEMENT**, RKR OTR PNL	94-02	F67	LH	10278988
47.	10-A23	12.934	**PANEL**, RKR INR (INCLS 48)	94-02	F	RH	10401912
	10-A23	12.934	**PANEL**, RKR INR (INCLS 48)	94-02	F	LH	10401913
48.		N.S.	**PLATE**, F/SEAT BELT ANC (PART OF 47)				
49.	10-A23	12.934	**REINFORCEMENT**, RKR OTR PNL	94-02	F67	RH	10286192
	10-A23	12.934	**REINFORCEMENT**, RKR OTR PNL	94-02	F67	LH	10286193
50.	10-A23	12.934	**PANEL**, RKR OTR	94-02	F	RH	12529163
	10-A23	12.934	**PANEL**, RKR OTR	94-02	F	LH	12529164

cardiagn.com

51.	10-A26	12.980	**REINFORCEMENT**, FLR PNL CTR	94-97	F67 (LT1, MM6)	1	10277247
	10-A26	12.980	**REINFORCEMENT**, FLR PNL CTR	94-97	F67 (LT1, M30)	1	10293609
	10-A26	12.980	**REINFORCEMENT**, FLR PNL CTR	94-95	F67 (L32)	1	10293609
	10-A26	12.980	**REINFORCEMENT**, FLR PNL CTR	95-97	F67 (L36)	1	10293609
	10-A26	12.980	**REINFORCEMENT**, FLR PNL CTR	98-02	F67 (LS1, M30)	1	10292668
52.	10-A26	12.980	**WASHER**, FLR PNL CTR REINF (3.706)	94-97	F67	4	15647208
	10-A26	12.980	**WASHER**, FLR PNL CTR REINF (5.812)	98-02	F67 (LS1, M30)	3	10293972
53.		8.900	**BOLT**, HEX W/CONICAL WA, M8X1.25X30, 28.8 THD, 17 OD, 6 DG PT, 9.8, PE (FLR PNL CTR REINF)	94-02	F	6	11515659
54.		N.S.	**BAR**, FLR PNL #1				
55.		N.S.	**REINFORCEMENT**, FLR PNL #1 BAR				
56.	10-N12	3.690	**BRACKET**, CTLTC CONV H/SHLD RR INR	94-02	F	3	20134572
57.		N.S.	**SUPPORT**, I/P CTR				
58.		N.S.	**BAR**, FLR PNL #2				
59.		N.S.	**BAR**, FLR PNL #3				
60.		N.S.	**BRACKET**, PARK BRK FRT CBL				
61.		N.S.	**REINFORCEMENT**, FLR PNL (PARK BRK LVR)				
62.		N.S.	**REINFORCEMENT**, FLR PNL (PARK BRK LVR)				
63.	10-A23	12.934	**SEALING STRIP**, RKR INR PNL TO BODY H/PLR INR PNL (4 1/4"X7 1/2") (TRIM AS REQ'D) (15.492)	94-02	F67	2	11515174

RPO DEFINITIONS

LS1 -- ENGINE GAS, 8 CYL., 5.7L, SFI, ALUMINUM ENGINE
LT1 -- ENGINE--GAS, 8 CYL, 5.7L(5.7P),MFI,HO
L32 -- ENGINE,3.4L,V6,(3.4S),SFI,OHV
L36 -- ENGINE GAS, 6 CYL, 3.8K, MFI, V6, HO (ERV6 SERIES)
MM6 -- TRANSMISSION MAN 6 SPD, BORG WARNER, 85MM, 1ST 2.66, 6TH 0.50, O/D
M30 -- TRANSMISSION,AUTOMATIC 4 SPEED,4L60E,ELECTRONIC

cardiagn.com

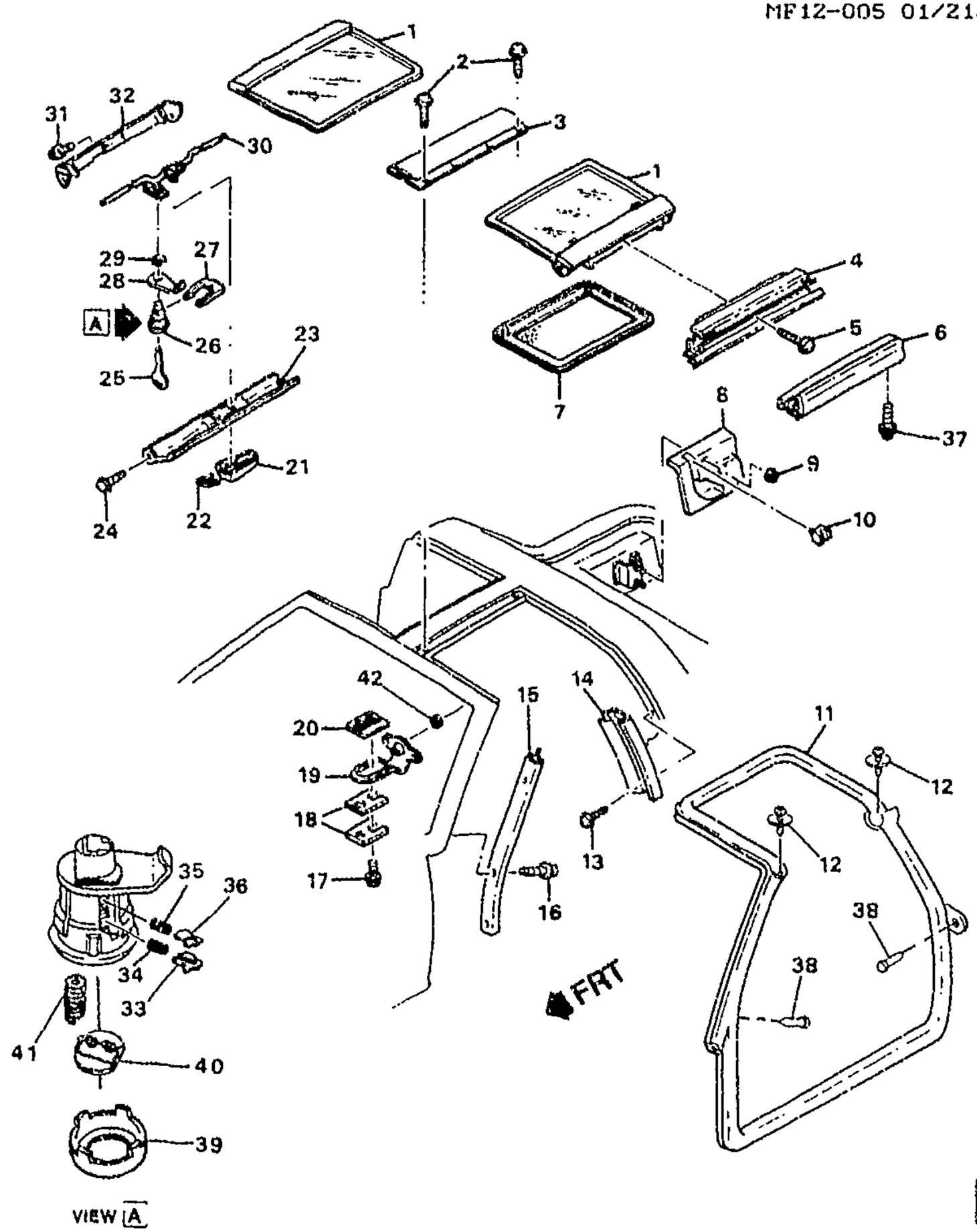

MF12-005

1993-2002 F87 ROOF HARDWARE/LIFT OFF PANELS (CC1)

1.		21.552	TOP PKG, T-TYPE (INCLS 30, 31, 32)	93-94			
	10-A19	12.810	WINDOW, RF LIFT OFF (INCLS 30, 31, 32)	95-97	F87 (CC1)	RH	10429585
	10-A19	12.810	WINDOW, RF LIFT OFF (INCLS 30, 31, 32)	95-97	F87 (CC1)	LH	10429586
	10-A19	12.810	WINDOW, RF LIFT OFF (INCLS 30, 31, 32)	98-02	F87 (CC1) (EXC A26)	RH	10429585
	10-A19	12.810	WINDOW, RF LIFT OFF (INCLS 30, 31, 32)	98-02	F87 (CC1) (EXC A26)	LH	10429586

cardiagn.com

	10–A19	12.810	**WINDOW**, RF LIFT OFF (INCLS 30, 31, 32)	99–02	F87 (A26, CC1) (EXPORT)	RH	10429587
	10–A19	12.810	**WINDOW**, RF LIFT OFF (INCLS 30, 31, 32)	99–02	F87 (A26, CC1) (EXPORT)	LH	10429588
2.		8.977	**SCREW**, LRG WA HD W/SEALER BSSD (4.2 X 14) (RF PNL LGTDNL BOW)	93–02		8	11509153
3.	10–A22	12.812	**MOLDING**, RF PNL LGTDNL BOW FIN (CPS) (12.810)	93–02	F87 (CC1)	1	10282361
	10–A22	12.812	**CAP**, RF LIFT OFF WDO FRT R/MLDG END	93–02	F87 (CC1)	1	10248550
	10–A22	12.812	**CAP**, RF LIFT OFF WDO RR R/MLDG END	93–02	F87 (CC1)	1	10248551
4.	10–N21	10.721	**RETAINER**, RF S/RL W/STR (W/EXTRUDED AWNING BONDED TO RET)	93–02	F (CC1)	LH	10402079
	10–N21	10.721	**RETAINER**, RF S/RL W/STR (W/EXTRUDED AWNING BONDED TO RET) (10.710)	93–02	F (CC1)	RH	10410058
5.		8.913	**SCREW PAN**, M4.2X1.41X13, 8.15 OD, 6010M, 6138M, C/R, TAP, AB–PT (RF LIFT OFF PNL/WDO BODY SI W/STR W/S FRM RET)	93–02	F87 (CC1)	8	11519838
6.	10–N21	10.710	**WEATHERSTRIP**, FRT S/D WDO UPR (10.721)	93–02	(CC1)	RH	10261744
	10–N21	10.710	**WEATHERSTRIP**, FRT S/D WDO UPR (10.721)	93–02	(CC1)	LH	10261745
7.	10–A19	12.810	**SUNSHADE**, RF LIFT OFF WDO (GRAPHITE) (INSTL W/O DUAL LK ATCHD TO T–TOP GLS, USE W/12520053)	93–95	F87 (CC1, DE4, 12I, 73I)	RH	10280591
	10–A19	12.810	**SUNSHADE**, RF LIFT OFF WDO (GRAPHITE) (INSTL W/O DUAL LK ATCHD TO T–TOP GLS, USE W/12520053)	93–95	F87 (CC1, DE4, 12I, 73I)	LH	10280592
	10–A19	12.810	**SUNSHADE**, RF LIFT OFF WDO (BEIGE) (INSTL W/O DUAL LK ATCHD TO T–TOP GLS, USE W/12520053)	93–95	F87 (CC1, DE4, 64I)	RH	10280593
	10–A19	12.810	**SUNSHADE**, RF LIFT OFF WDO (BEIGE) (INSTL W/O DUAL LK ATCHD TO T–TOP GLS, USE W/12520053)	93–95	F87 (CC1, DE4, 64I)	LH	10280594
	10–A19	12.810	**SUNSHADE**, RF LIFT OFF WDO (GRAY) (INSTL W/O DUAL LK ATCHD TO T–TOP GLS, USE W/12520053)	93–95	F87 (CC1, DE4, 14I)	RH	10280595
	10–A19	12.810	**SUNSHADE**, RF LIFT OFF WDO (GRAY) (INSTL W/O DUAL LK ATCHD TO T–TOP GLS, USE W/12520053)	93–95	F87 (CC1, DE4, 14I)	LH	10280596
	10–A19	12.810	**SUNSHADE**, RF LIFT OFF WDO (GRAPHITE)	96	F87 (CC1, DE4, 12I, 14I, 73I)	RH	10280591
	10–A19	12.810	**SUNSHADE**, RF LIFT OFF WDO (GRAPHITE)	96	F87 (CC1, DE4, 12I, 14I, 73I)	LH	10280592
	10–A19	12.810	**SUNSHADE**, RF LIFT OFF WDO (NEUTRAL)	96–02	F87 (CC1, DE4, 52I)	RH	10280597

cardiagn.com

	10–A19	12.810	**SUNSHADE**, RF LIFT OFF WDO (NEUTRAL)	96–02	F87 (CC1, DE4, 52I)	LH	10280598
	10–A19	12.810	**SUNSHADE**, RF LIFT OFF WDO (GRAY)	97–99	F87 (CC1, DE4, 10I, 14I, 73I)	RH	10278956
	10–A19	12.810	**SUNSHADE**, RF LIFT OFF WDO (GRAY)	97–99	F87 (CC1, DE4, 10I, 14I, 73I)	LH	10278957
	10–A19	12.810	**SUNSHADE**, RF LIFT OFF WDO (PEWTER)	97	F87 (CC1, DE4, 92I)	RH	10284292
	10–A19	12.810	**SUNSHADE**, RF LIFT OFF WDO (PEWTER)	97	F87 (CC1, DE4, 92I)	LH	10284293
	10–A19	12.810	**SUNSHADE**, RF LIFT OFF WDO (PEWTER)	00–02	F87 (CC1, DE4, 92I)	RH	10284292
	10–A19	12.810	**SUNSHADE**, RF LIFT OFF WDO (PEWTER)	00–02	F87 (CC1, DE4, 92I)	LH	10284293
8.	10–A19	12.810	**RETAINER**, RF LIFT OFF PNL/WDO STOW (INCLS 10)	93–02	F87 (CC1)	LH	10435203
	10–A19	12.810	**RETAINER**, RF LIFT OFF PNL/WDO STOW (INCLS 10)	93–02	F87 (CC1)	RH	10435202
9.		8.917	**NUT**, HEX W/CON WA 6X1X5.5 16–OD ZP 9 (RF LIFT OFF PNL/WDO STOW RR BRKT)	93–02		4	11517293
10.		N.S.	**INSULATOR**, RF LIFT OFF PNL/WDO FRM (PART OF 8) (ON EARLY MODELS ONLY; USED ONLY WITH 10229357 & 10229358. NOT REQ. WITH LATER VERSIONS.)				
11.	10–N20	10.694	**WEATHERSTRIP**, FRT S/D	93–02	F (CC1)	LH	10286717
	10–N20	10.694	**WEATHERSTRIP**, FRT S/D	93–95	F (CC1)	RH	10429541
	10–N20	10.694	**WEATHERSTRIP**, FRT S/D	97–02	F (CC1)	RH	10429541
	10–N20	10.694	**WEATHERSTRIP**, FRT S/D (HAS GROOVE IN CENTER OF B–PILLAR SURFACE)	96	F (CC1) (2ND DES)	RH	10429541
	10–N20	10.695	**STIFFENER**, FRT S/D W/STR (FRT) (PART OF FRT S/D W/STR) (13.346)	93–95	F	RH	10260724
	10–N20	10.695	**STIFFENER**, FRT S/D W/STR (FRT) (PART OF FRT S/D W/STR) (13.346)	93–95	F	LH	10260725
	10–N20	10.695	**STIFFENER**, FRT S/D W/STR (FRT) (PART OF FRT S/D W/STR) (13.346) (W/STR HAS SMOOTH B–PLR SURF, NO COMPARABLE 2ND DES)	96	F (1ST DES)	RH	10260724
	10–N20	10.695	**STIFFENER**, FRT S/D W/STR (FRT) (PART OF FRT S/D W/STR) (13.346) (W/STR HAS SMOOTH B–PLR SURF, NO COMPARABLE 2ND DES)	96	F (1ST DES)	LH	10260725
	10–N20	10.695	**STIFFENER**, FRT S/D W/STR (RR) (PART OF FRT S/D W/STR) (13.346)	93–95	F	RH	10245336
	10–N20	10.695	**STIFFENER**, FRT S/D W/STR (RR) (PART OF FRT S/D W/STR) (13.346)	93–95	F	LH	10245337

cardiagn.com

	10-N20	10.695	**STIFFENER**, FRT S/D W/STR (RR) (PART OF FRT S/D W/STR) (13.346) (W/STR HAS SMOOTH B-PLR SURF, NO COMPARABLE 2ND DES)	96	F (1ST DES)	RH	10245336
	10-N20	10.695	**STIFFENER**, FRT S/D W/STR (RR) (PART OF FRT S/D W/STR) (13.346) (W/STR HAS SMOOTH B-PLR SURF, NO COMPARABLE 2ND DES)	96	F (1ST DES)	LH	10245337
		N.S.	**STIFFENER**, FRT S/D W/STR (PART OF FRT S/D W/STR)	97-02			
12.	10-A19	12.810	**BOLT**, RF LIFT OFF PNL/WDO SI W/STR (8.900)	93-02	F (CC1)	4	11516084
13.		8.977	**SCREW**, LG RND WA HD W/BLK NYL WA, 4.2X 1.41X13, 11-OD, DRILL PT, 6172, PEOR (FRT S/D W/STR RET)	93-02		6	10180421
14.	10-N20	10.694	**RETAINER**, FRT S/D W/STR	93-02	F87	RH	10273941
	10-N20	10.694	**RETAINER**, FRT S/D W/STR	93-02	F87	LH	10273942
15.	10-A19	12.810	**RETAINER**, RF LIFT OFF PNL/WDO BODY SI W/STR W/S FRM (10.721)	93-02	F87 (CC1)	RH	10261680
	10-A19	12.810	**RETAINER**, RF LIFT OFF PNL/WDO BODY SI W/STR W/S FRM (10.721)	93-02	F87 (CC1)	LH	10261681
16.		8.913	**SCREW PAN**, M4.2X1.41X13, 8.15 OD, 6010M, 6138M, C/R, TAP, AB-PT (RF LIFT WDO BODY SI W/STR W/S FRM RET)	93-02		8	11519838
17.		8.900	**BOLT**, HEX W/CON WA, M6X1X25, 20 THD, 9.8, DO (RF RR PNL LAT STKR)	93-02	F87	8	15650674
18.	10-A19	12.810	**PLATE**, RF LIFT OFF PNL/WDO FRT STKR BRKT (APPROX "2" PER SIDE "4" PER VEHICLE) (1MM THICK)	93-02	F87 (CC1)	AR	10178052
	10-A19	12.810	**PLATE**, RF LIFT OFF PNL/WDO FRT STKR BRKT (APPROX "2" PER SIDE "4" PER VEHICLE) (2MM THICK)	93-02	F87 (CC1)	AR	10178053
	10-A19	12.810	**PLATE**, RF LIFT OFF PNL/WDO RR STKR BRKT BKG (APPROX "2" PER SIDE "4" PER VEHICLE) (1MM THICK)	93-02	F87 (CC1)	AR	10178052
	10-A19	12.810	**PLATE**, RF LIFT OFF PNL/WDO RR STKR BRKT BKG (APPROX "2" PER SIDE "4" PER VEHICLE) (2MM THICK)	93-02	F87 (CC1)	AR	10178053
19.	10-A22	12.811	**STRIKER**, RF LIFT OFF PNL/WDO FRT	93-02	F87 (CC1)	2	10262548
	10-A22	12.811	**STRIKER**, RF LIFT OFF PNL/WDO RR	93-02	F87 (CC1)	2	10262548
20.	10-A19	12.810	**RETAINER**, RF LIFT OFF PNL/WDO FRT NUT PLT	93-02	F87 (CC1)	4	10214021
21.	10-A19	12.810	**HANDLE**, RF LIFT OFF PNL/WDO LAT (INCLS 22)	93-02	F87 (CC1)	RH	10200256

cardiagn.com

	10–A19	12.810	**HANDLE**, RF LIFT OFF PNL/WDO LAT (INCLS 22)	93–02	F87 (CC1)	LH	10200257
22.	10–A19	12.810	**SPRING**, RF LIFT OFF PNL HDL (PART OF 21) (10.512)	93–02	F87 (CC1)	2	4168122
23.	10–A22	12.811	**COVER**, RF LIFT OFF PNL/WDO LAT TR	93–99	F87 (CC1)	RH	10246779
	10–A22	12.811	**COVER**, RF LIFT OFF PNL/WDO LAT TR	93–99	F87 (CC1)	LH	10246780
	10–A22	12.811	**COVER**, RF LIFT OFF PNL/WDO LAT TR	00–02	F87 (CC1)	RH	10436823
	10–A22	12.811	**COVER**, RF LIFT OFF PNL/WDO LAT TR	00–02	F87 (CC1)	LH	10436824
24.	10–A22	12.811	**BOLT**, RF LIFT OFF PNL/WDO LAT TR CVR (M4.8X1.59X13 NKEL) (12.810)	93–02	F87 (CC1)	4	20356151
25.	10–M27	2.187	**KEY**, DR LK (OVAL HD, GRV H, B&S 320405A, CAN USE 20364745 BOOT)	93–02	F	2	1154607
26.	10–A19	12.810	**CYLINDER**, RF LIFT OFF PNL/WDO LK (INCLS 39, 40, 41) (10.266)	93–02	F (CC1)	2	12506783
27.	10–A19	12.810	**RETAINER**, RF LIFT OFF PNL/WDO LK CYL (10.267)	93–02	F87 (CC1)	2	12337954
28.	10–A19	12.810	**LATCH**, RF LIFT OFF WDO LK CYL (PAWL)	93–98	F (CC1)	1	16622591
	10–A19	12.810	**LATCH**, RF LIFT OFF PNL/WDO LK CYL (PAWL)	99–02	F (CC1)	1	16622591
29.	10–N19	10.551	**RETAINER**, RR S/D LK LVR (12.945)	93–02	F (CC1)	2	20650814
30.		N.S.	**LATCH**, RF LIFT OFF PNL/WDO (PART OF 1)				
31.	10–A22	12.811	**BOLT**, RF LIFT OFF PNL/WDO LAT (PART OF 1) (14.875)	93–02	F (CC1)	2	20693449
32.		N.S.	**SUPPORT**, RF LIFT OFF PNL/WDO LAT (PART OF 1)				
33.	10–N18	10.266	**TUMBLER**, I/P COMPT DR LK CYL ANTI–ROTATION (10.260)	93–02	F	1	12508607
34.	10–A19	12.810	**SPRING**, RF LIFT OFF WDO LK CYL TUMB (ANTI–RATTLE) (10.266)	93–02	F	2	20496065
35.	10–A19	12.810	**SPRING**, RF LIFT OFF WDO LK CYL TUMB (SNAP IN) (10.268)	93–02	F	2	6259315
36.	10–A19	12.810	**TUMBLER**, RF LIFT OFF PNL/WDO LK CYL (#1) (SNAP IN) (10.553)	93–02	F	1	6259309
	10–A19	12.810	**TUMBLER**, RF LIFT OFF PNL/WDO LK CYL (#2) (SNAP IN) (10.266)	93–99	F	1	6259310
	10–A19	12.810	**TUMBLER**, RF LIFT OFF PNL/WDO LK CYL (#3) (SNAP IN) (10.266)	93–99	F	1	6259311
	10–A19	12.810	**TUMBLER**, RF LIFT OFF PNL/WDO LK CYL (#4) (SNAP IN) (10.266)	93–99	F	1	6259312
	10–A19	12.810	**TUMBLER**, RF LIFT OFF PNL/WDO LK CYL (#5) (SNAP IN) (10.266)	93–99	F	AR	6259313

cardiagn.com

37.		8.977	**BOLT-SCREW**, M4.2X1.41X13, 5.4 THD, 12.5 OD, GM6172M, GM6138M (RF LIFT OFF WDO BODY SI W/STR)	93-02	.....	4	15714277
38.	10-N20	10.694	**RETAINER**, FRT S/D W/STR (FULL FLDG) (10.695)	93-02	F	2	8731909
39.	10-A19	12.810	**CAP**, RF LIFT OFF WDO LK CYL (PART OF 26) (12.248)	93-02	F (CC1)	1	20496886
40.	10-A19	12.810	**SHUTTER**, RF LIFT OFF WDO LK CYL (PART OF 26) (12.945)	93-02	F (CC1)	1	12503695
41.	10-A19	12.810	**SPRING**, RF LIFT OFF WDO LK CYL SHUTTER (PART OF 26) (10.552)	93-02	F (CC1)	2	12503691
42.	10-A22	12.811	**BUSHING**, RF LIFT OFF PNL/WDO LAT	93-02	F	1	10241173

RPO DEFINITIONS
A26 – WINDOW,UNITED KINGDOM AND EUROPEAN GLAZING(EXPORT)
CC1 – ROOF,HATCH,REMOVABLE PANELS,GLASS
DE4 – SUNSHADE,REMOVABLE HATCH ROOF
10I – INTERIOR TRIM– ARCTIC WHITE
12I – INTERIOR TRIM GRAPHITE
14I – INTERIOR TRIM LT GRAY
52I – INTERIOR TRIM LIGHT NEUTRAL
64I – INTERIOR TRIM,LIGHT BEIGE
73I – INTERIOR TRIM,FLAME RED
92I – INTERIOR TRIM SHALE/PEWTER

cardiagn.com

ILLUSTRATION INDEX

	TITLE	GRID
1994–2002	F67 FOLDING TOP COVER	10–F4

cardiagn.com

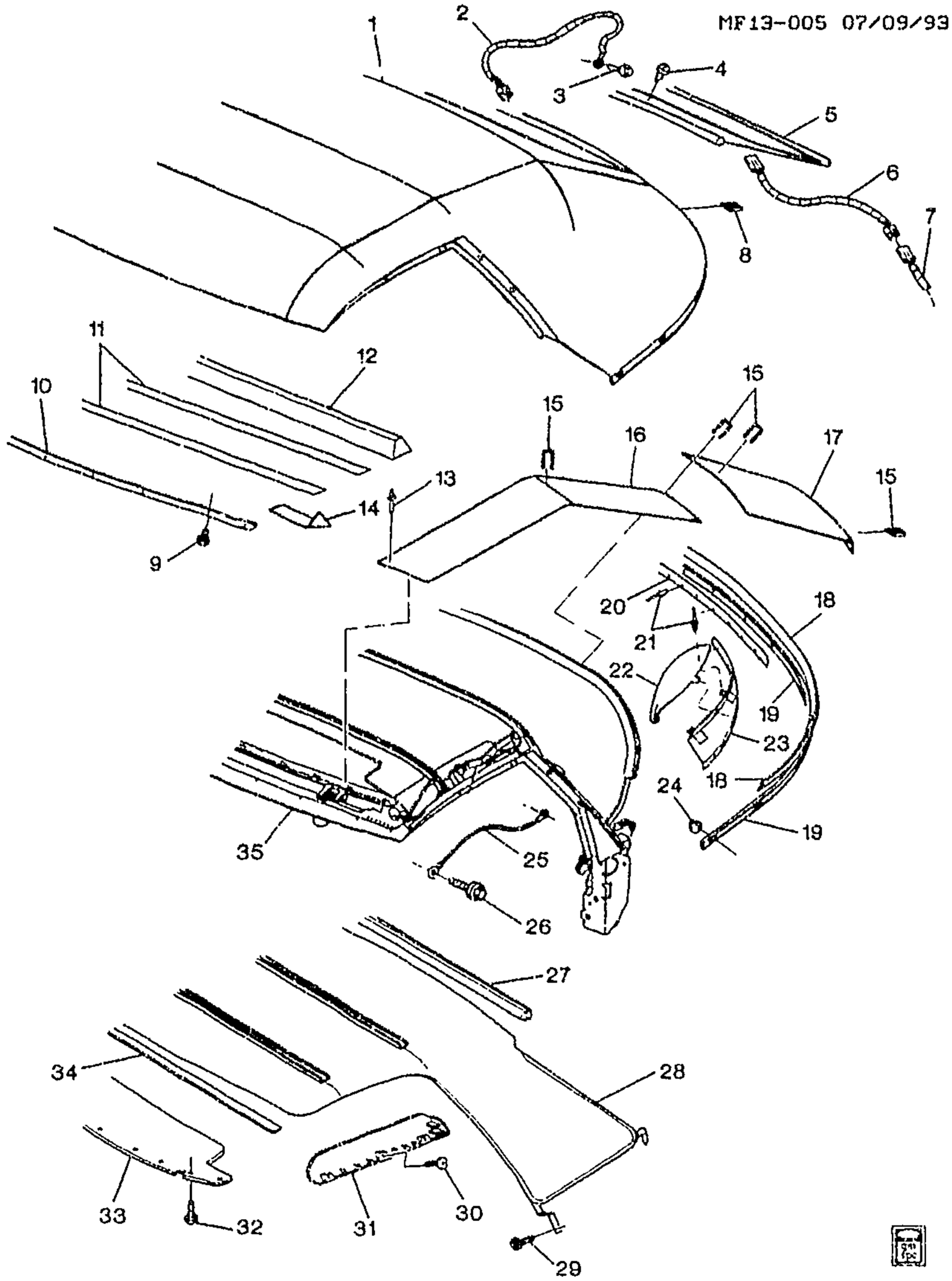

MF13-005

1994-2002 F67 FOLDING TOP COVER

1.	10-B13	13.347	COVER, F/TOP (W/O BK GLS) ...	94-02	F67 (41T)	1	10282820
	10-B13	13.347	COVER, F/TOP (W/O BK GLS) ...	94-95	F67 (62T)	1	10282821
	10-B13	13.347	COVER, F/TOP (W/O BK GLS) ...	94-00	F67 (10T)	1	10282822
	10-B13	13.347	COVER, F/TOP (NEUTRAL) (W/O	96-01	F67 (56T)	1	10287790

cardiagn.com

2.	10-N16	9.778	WIRE, R/WDO DEFG GND	94-02	F67	1	12521907
3.		8.977	SCREW, MET HEX HD (M6.3X1.81) (R/WDO DEFG WRG HARN GND)	94-02		1	11502707
4.	10-N22	14.155	BOLT, F/TOP CVR #4 BOW RET	94-02	F67	1	10248217
5.	10-B14	13.389	WINDOW, F/TOP RR (BEECHWOOD) (HEATED) (11.204)	94-95	F67	1	10282829
	10-B14	13.389	WINDOW, F/TOP RR (WHITE) (HEATED) (11.204)	94-02	F67	1	10282830
	10-B14	13.389	WINDOW, F/TOP RR (BLACK) (HEATED)	94-02	F67	1	10282831
	10-B14	13.389	WINDOW, F/TOP RR (NEUTRAL) (HEATED)	96-02	F67	1	10287791
6.	10-N16	9.778	WIRE, R/WDO DEFG RR	94-02	F67	1	12521897
7.	10-N16	9.778	CONNECTOR, INLINE-TO R/WDO DEFG (1-WAY F) (W/LEADS) (M/P 480) (8.965) (AC-DELCO #PT486)	94-02	F67	1	12117353
8.		N.S.	STAPLE, F/TOP (.50X.314)				
9.	10-N22	14.080	BOLT, F/TOP (14.102)	94-02	F67	10	12360600
10.	10-B13	13.347	RETAINER, F/TOP CVR #1 BOW	94-02	F67	1	10264162
11.		N.S.	TAPE, F/TOP (3/4")				
12.	10-B13	13.347	RETAINER, F/TOP CVR #4 BOW (USE ON VEHS W/F/TOP ASM SERIAL #2241 & PRIOR, #IS ON LBL ON LH RR RAIL)	94-02	F67	1	10224610
13.	10-B13	13.347	RIVET, F/TOP #1, #2, #3, #4 BOW POSN PAD	94-02	F67	12	10220722
14.		N.S.	TAPE, F/TOP (BLACK CLOTH 2")				
15.		N.S.	STAPLE, F/TOP STAY PAD (.31X.31)				
16.	10-B13	13.347	PAD, F/TOP #1, #2, #3, #4 BOW POSN	94-02	F67	2	10193291
17.	10-B14	13.395	PAD, F/TOP #4 & #5 BOW POSN	94-02	F67 (10T, 41T, 56T)	2	10193292
18.		N.S.	MOLDING, F/TOP CVR LWR RR (*KIT1)				
19.	10-N23	14.340	BOW, F/TOP #5 (*KIT1)	94-02	F67 (10T, 41T, 56T)	1	10220721
20.		N.S.	SUPPORT, F/TOP CVR RR CTR (*KIT1)				
21.	10-B14	13.395	RIVET, F/TOP CVR RR CTR SUPT (*KIT1) (13.347)	94-02	F67	12	10220722
22.		N.S.	EXTENSION, F/TOP CVR RR OTR SUPT (*KIT1)				
23.		N.S.	SUPPORT, F/TOP CVR RR OTR (*KIT1)				
24.		8.917	NUT, HEX W/CON WA M6X1X5.5, 24-OD 9 PEOR (F/TOP) (8.915)	94-02		17	11508380
25.	10-N22	14.102	CABLE, F/TOP CVR FRT SI TENS (572.0 MM LG)	94	F67	2	3635144
	10-N22	14.102	CABLE, F/TOP CVR FRT SI TENS (USE ON VEH W/F/TOP SERIAL#26492, # IS ON LBL ON LH RR RAIL)	95	F67 (2ND DES)	2	10288507

cardiagn.com

	10-N22	14.102	**CABLE**, F/TOP CVR FRT SI TENS (USE ON VEHS W/F/TOP SERIAL#26491 & PRIOR, # IS ON LBL ON LH RR RAIL) (572.0 MM LG)	95	F67 (1ST DES)	2	3635144
	10-N22	14.102	**CABLE**, F/TOP CVR FRT SI TENS	96-02	F67	2	10288507
	10-N22	14.102	**CABLE**, F/TOP CVR FRT SI TENS (USE ON VEH W/F/TOP SERIAL#26492, # IS ON LBL ON LH RR RAIL)	95	F67 (2ND DES)	2	10288507
	10-N22	14.102	**CABLE**, F/TOP CVR FRT SI TENS (USE ON VEHS W/F/TOP SERIAL#26491 & PRIOR, # IS ON LBL ON LH RR RAIL) (572.0 MM LG)	95	F67 (1ST DES)	2	3635144
26.	10-N22	14.102	**BOLT**, F/TOP CVR SI TENS CBL SET	94-02	F67	4	12360600
27.		N.S.	**RETAINER**, F/TOP HDLNG TR FIN PNL #4 BOW (PART OF 28)				
28.	10-B13	13.347	**PANEL**, F/TOP HDLNG TR (INCLS 27)	94-95	F67 (10T, 41T, 62T)	1	12493727
	10-B13	13.347	**PANEL**, F/TOP HDLNG TR (INCLS 27)	96-98	F67 (10T, 41T, 56T)	1	12493727
	10-B13	13.347	**PANEL**, F/TOP HDLNG TR (INCLS 27)	99-02	F67	1	12493727
29.		N.S.	**BOLT**, F/TOP				
30.	10-N22	14.120	**BOLT**, F/TOP S/RL GARN MLDG	94-02	F67	6	10220767
31.	10-N22	14.120	**MOLDING**, F/TOP S/RL GARN (CLOTH COVERED)	94-02	F67	RH	10282837
	10-N22	14.120	**MOLDING**, F/TOP S/RL GARN (CLOTH COVERED)	95-02	F67	LH	10282838
32.	10-N22	14.130	**BOLT**, F/TOP #1 BOW GARN MLDG	94-02	F67	1	10273614
33.	10-N22	14.130	**MOLDING**, F/TOP #1 BOW GARN	94-02	F67	1	10401512
		DISCON	**MOLDING**, F/TOP #1 BOW GARN (HAS BOWTIE EMB MOLDED IN) (14.130)	94	F67 (1ST DES)	1	10220758
34.		N.S.	**TAPE**, F/TOP HDLNG TR FIN PNL FSTN (3/4")				
35.		N.S.	**FRAME**, F/TOP (SEE "FOLDING TOP ASM/FRAME" ILLUSTRATION IN GRP. 14.000 FOR DETAILED VIEW.)				

SERVICE KITS

1.	10-B14	13.395	**SUPPORT KIT**, F/TOP CVR RR (INCLS 18-23) (14.310)	94-02	F67	1	12522400

RPO DEFINITIONS

10T – VINYL TOP COLOR,ARCTIC WHITE
41T – VINYL TOP COLOR,BLACK
56T – VINYL TOP COLOR,MED NEUTRAL
62T – VINYL TOP COLOR,LIGHT BEECHWOOD METALLIC

cardiagn.com

ILLUSTRATION INDEX

	TITLE	GRID
1994–2002	F67 FOLDING TOP ASM/ACTUATOR	11–E4
1994–2002	F67 FOLDING TOP ASM/FRAME DETAILS	11–E6
1993–2002	F TRIM/FRONT DOOR	11–E12
1993–2002	F87 TRIM/INTERIOR REAR	11–E20
1993–2002	F87 TRIM/INTERIOR FRONT	11–F2
1994–2002	F67 TRIM/INTERIOR REAR	11–F8
1994–2002	F67 TRIM/INTERIOR FRONT	11–F12
1993–2002	F SEAT ASM/FRONT	11–G2
1993–1995	F INFLATABLE RESTRAINT SYSTEM	11–G20
1996–2002	F INFLATABLE RESTRAINT SYSTEM	11–G22
1993–1996	F87 SEAT BELT HARDWARE	11–G24
1994–1995	F67 SEAT BELT HARDWARE	11–H2
1996–2002	F67 SEAT BELT HARDWARE	11–H8
1997–2002	F87 SEAT BELT HARDWARE	11–H18

cardiagn.com

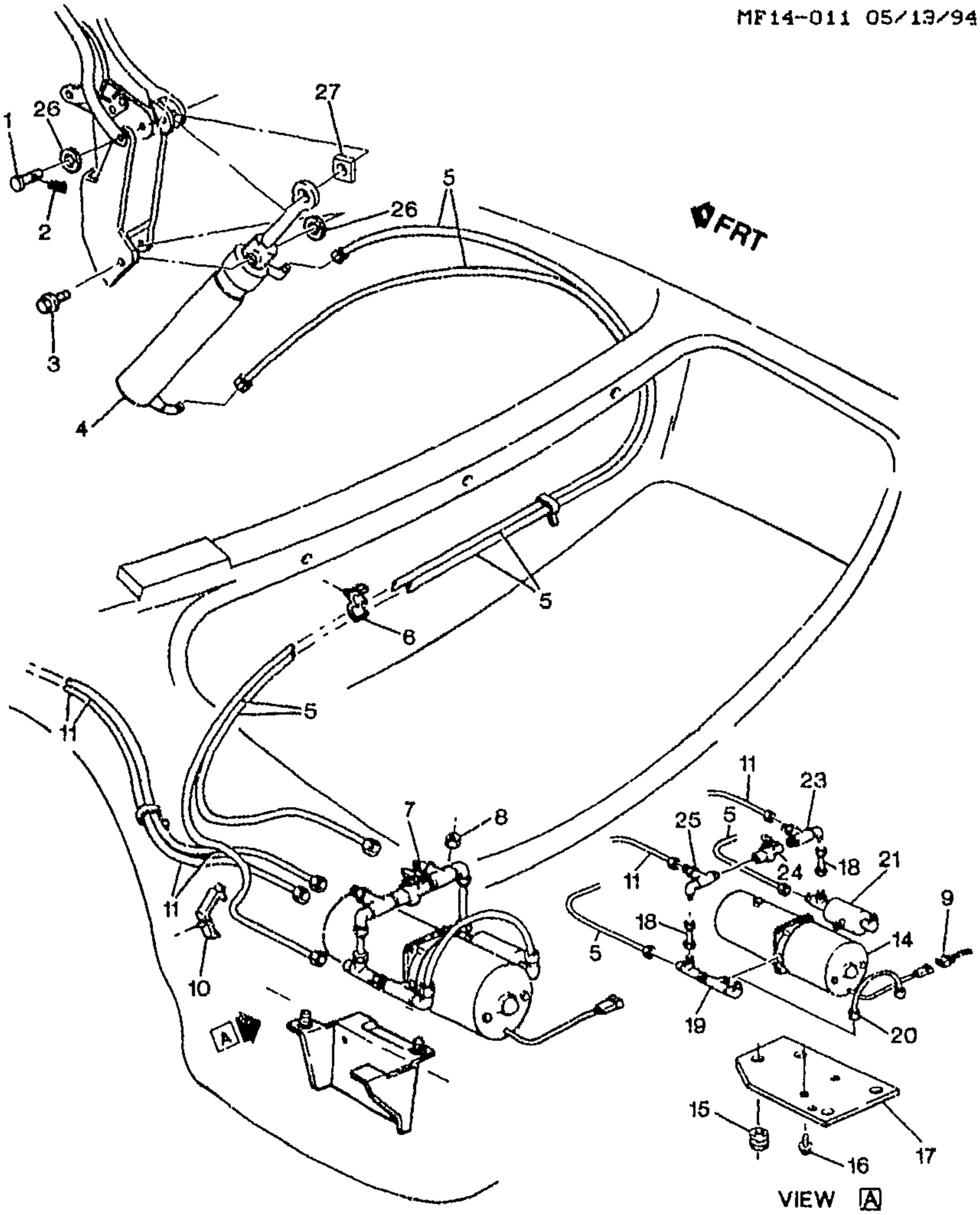

MF14-011

1994--2002 F67 FOLDING TOP ASM/ACTUATOR

1.	11-A20	14.475	PIN, F/TOP CYL PIV	94-02	F67	2	10203552
2.		8.938	PIN, COTTER 3/32X1 1/2 PL (F/TOP PIV BRKT LOC)	94-02	.....	AR	103376
3.	11-A20	14.475	BOLT, F/TOP CYL	94-96	F67	2	10235111
	11-A20	14.475	BOLT, F/TOP CYL	97-02	F67	2	10284414
4.	11-A20	14.475	CYLINDER, F/TOP	94-02	F67	2	10195389

cardiagn.com

5.	11–A20	14.472	**HOSE**, F/TOP CYL UPR	94–02	F67	2	10195390
6.	11–A20	14.472	**RETAINER**, F/TOP CYL UPR HOSE (PUSH ON) (2 PLC PUSH ON)	94–02	F67	12	10248219
7.		N.S.	**PUMP**, F/TOP (W/MOT) (SERVICED BY COMPONENTS INCLS 15–25)				
8.		0.917	**NUT**, HEX W/CON WA 6X1X5.5 16–OD ZP 9 (F/TOP PUMP)	94–02	F67	2	11517293
9.		8.965	**CONNECTOR**, W/LEADS (MOT–F/TOP PUMP) (2.535) (AC–DELCO #PT159)	94–02	F67	1	12101888
10.	11–A20	14.472	**RETAINER**, F/TOP CYL UPR HOSE (PUSH ON) (POSITIVE LK/CLOSE OVER)	94–02	F67	1	10246020
11.	11–A20	14.472	**HOSE**, F/TOP CYL LWR	94–02	F67	2	10195391
14.	11–A21	14.481	**PUMP**, F/TOP (W/MOT) (INCLS FILL PLUG) (INCLS 18–25)	94–02	F67	1	10277203
	11–A21	14.482	**PLUG**, F/TOP PUMP (PART OF F/TOP PUMP)	94–02	F67	1	10249509
15.	11–A21	14.482	**INSULATOR**, F/TOP PUMP BRKT (PART OF 7)	94–02	F67	4	10220946
16.	11–A21	14.482	**BOLT**, F/TOP PUMP (PART OF 7)	94–02	F67	2	10220947
17.	11–A21	14.482	**BRACKET**, F/TOP PUMP (PART OF 7) (TO PUMP)	94–02	F67	1	10224671
18.	11–A20	14.472	**TUBE**, F/TOP PUMP (PART OF 7, 14)	94–02	F67	1	10253625
19.	11–A21	14.482	**FITTING**, F/TOP PUMP (PART OF 7, 14)	94–02	F67	1	10253624
20.	11–A20	14.472	**TUBE**, F/TOP PUMP (PART OF 7, 14)	94–02	F67	1	10253625
21.	11–A21	14.482	**VALVE**, F/TOP PUMP CHK (PART OF 7, 14)	94–02	F67	1	10253626
23.		N.S.	**FITTING (PART OF 7**, 14, 24)				
24.	11–A21	14.482	**VALVE**, F/TOP CYL (INCLS 23, 25) (PART OF 7, 14)	94–02	F67	1	10220948
25.		N.S.	**FITTING (PART OF 7**, 14, 24)				
26.	11–A19	14.162	**WASHER**, F/TOP PIV BRKT (4.659)	94–02	F67	4	3788262
27.	11–A19	14.310	**WASHER**, F/TOP OTR ARM PIV	94–02	F67	2	10265717

cardiagn.com

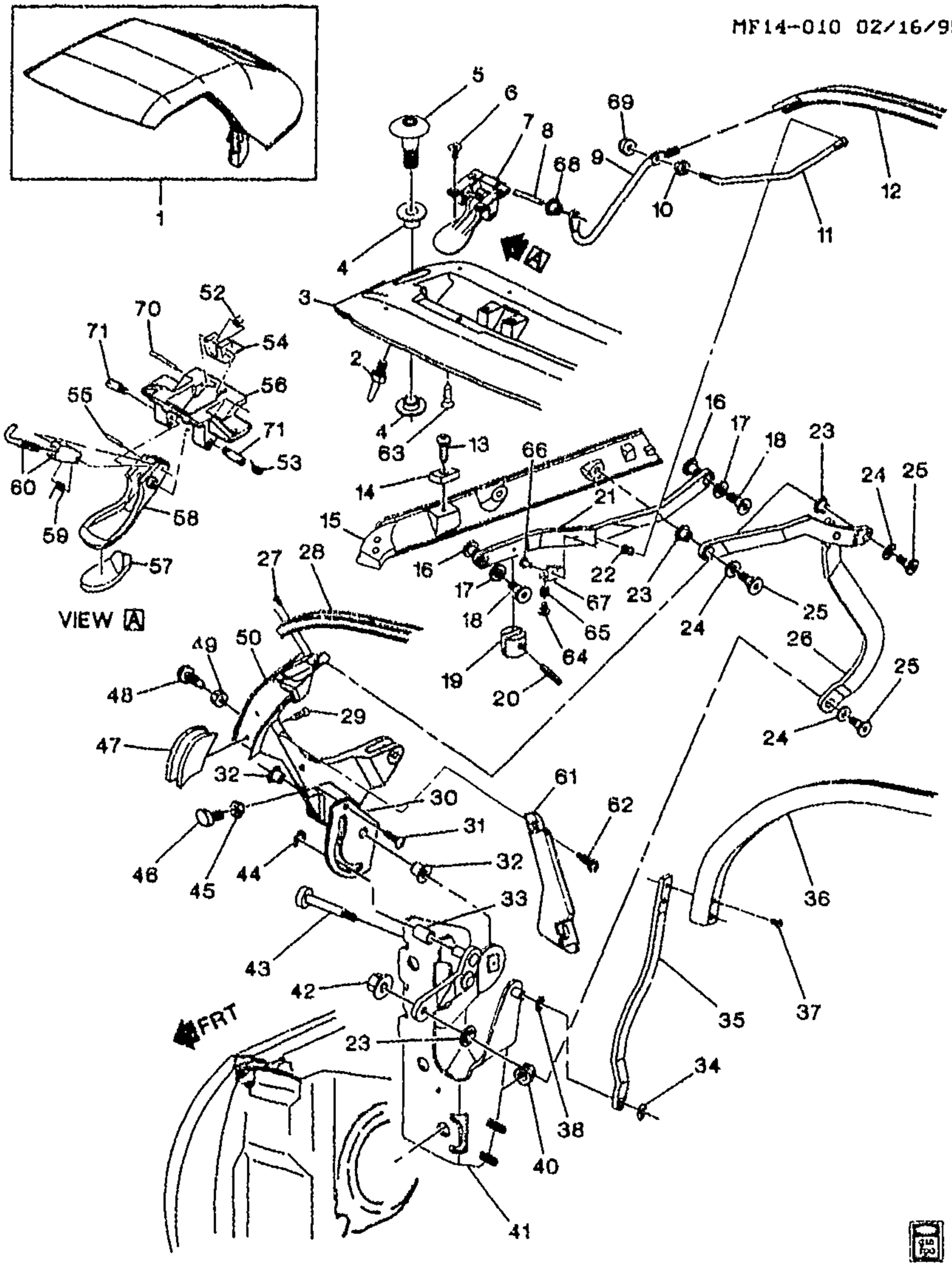

MF14-010

1994-2002 F67 FOLDING TOP ASM/FRAME DETAILS

1.	11-N28	13.346	TOP, FLDG (LT BEECHWOOD MET) (WHEN USED ON 94-96 USE BOLT 10284414)	94-95	F67 (62T)	1	10282818
	11-N28	13.346	TOP, FLDG (BLACK)	94-02	F67 (41T)	1	10304716
	11-N28	13.346	TOP, FLDG (WHITE)	94-02	F67 (10T)	1	10304717

cardiagn.com

	11–N28	13.346	TOP, FLDG (BLACK)	94–02	F67 (41T)	1	10440460
	11–N28	13.346	TOP, FLDG (WHITE)	94–02	F67 (10T)	1	10440461
	11–N28	13.346	TOP, FLDG (NEUTRAL)	96–01	F67 (56T)	1	10304718
	11–N28	13.346	TOP, FLDG (NEUTRAL)	96–00	F67 (56T)	1	10418069
2.	11–A16	14.090	GUIDE, F/TOP FRT LOC PIN (PART OF 3 ON ALL 1994 AND 1ST DESIGN 1995)	94–95	F67	2	10224611
3.	11–A18	14.130	BOW, F/TOP #1 (INCLS 2 ON ALL 1994 AND 1ST DESIGN 1995)	94	F67	1	10268272
	11–A19	14.130	BOW, F/TOP #1 (INCLS 2 ON ALL 1994 AND 1ST DESIGN 1995)	96–02	F67	1	10282624
	11–A18	14.130	BOW, F/TOP #1 (FOR VEH W/F/TOP SERIAL#26491 & PRIOR, #IS ON LBL ON LH RR RAIL OF F/TOP) (INCLS 2 ON ALL 1994 AND 1ST DESIGN 1995)	95	F67 (1ST DES)	1	10268272
	11–A18	14.130	BOW, F/TOP #1 (FOR VEH W/F/TOP SERIAL#GREATER THAN 26491, #IS ON LBL ON LH RR RAIL OF F/TOP) (INCLS 2 ON ALL 1994 AND 1ST DESIGN 1995)	95	F67 (2ND DES)	1	10282624
4.	11–A19	14.180	BUSHING, F/TOP #1 BOW LINK FRT PIV	94–02	F67	8	10225175
5.	11–A16	14.080	BOLT, F/TOP #1 BOW (BLACK)	94–02	F67 (10T, 41T, 56T)	4	10224620
	11–A16	14.080	BOLT, F/TOP #1 BOW (BLACK)	94–02	FP67	4	10224620
6.	11–A16	14.080	BOLT, F/TOP FRT LAT (BLACK) (11.011)	97–02	F67	4	10273792
7.	11–A16	14.080	LATCH, F/TOP FRT (INCLS 52, 53, 55–60)	95–02	F67	2	10284234
	11–A16	14.080	LATCH, F/TOP FRT (ON VEH W/F/TOP SERIAL #2770 & GREATER, #IS ON LBL ON LH RR RAIL OF F/TOP) (INCLS 52, 53, 55–60)	94	F67 (2ND DES)	2	10284234
	11–A16	14.080	BUMPER, F/TOP FRT LAT (USE W/LATCH 10284234)	94–02	F67	2	10267910
8.		8.939	SPRING PIN, 0.16X0.75, STL, PC, CHAM ENDS, (IN) (PART OF 9) (14.140)	94–02		2	10248218
9.	11–A18	14.140	LINK, F/TOP #2 BOW (ASSEMBLY) (INCLS 2 PCS. EA. OF: 8, 9, 10, 68, 69 AND ONE EA. LH & RH #11)	94–02	F67	2	12369565
		N.S.	LINK, F/TOP #2 BOW (INCLS 2 PCS. EA. OF: 8, 9, 10, 68, 69 AND ONE EA. LH & RH #11)	00–02	F	1	
10.		N.S.	NUT, F/TOP FRT S/RL LINK EYEBOLT (ASC# X–00S0–0322–XZSX (PART OF 9)				
11.		N.S.	LINK, F/TOP #2 BOW (PART OF 9)				
12.	11–A19	14.215	BOW, F/TOP #2 (BLACK)	94–02	F67 (10T, 41T, 56T)	1	10193294
13.	11–A19	14.215	BOLT, F/TOP #2 BOW INSL.	94–02	F67	2	10220764
14.	11–A19	14.215	INSULATOR, F/TOP #2 BOW	94–02	F67	2	10220763

cardiagn.com

15.	11-A17	14.100	RAIL, F/TOP SI	95-02	F67 (10T, 41T, 56T)	RH	10282835
	11-A17	14.100	RAIL, F/TOP SI	95-02	F67	LH	10282836
	11-A17	14.100	RAIL, F/TOP SI (USE ON VEH W/F/TOP SERIAL#21200 & PRIOR, # IS ON LBL ON LH RR RAIL OF F/TOP)	94	F67 (1ST DES)	RH	10264158
		DISCON	RAIL, F/TOP SI (USE ON VEH W/F/TOP SERIAL#21200 & PRIOR, # IS ON LBL ON LH RR RAIL OF F/TOP)	94	F67 (1ST DES)	LH	10264159
	11-A17	14.100	RAIL, F/TOP SI (USE ON VEH W/F/TOP SERIAL# GREATER THAN 21200, # IS ON LBL ON LH RR RAIL OF F/TOP)	94	F67 (2ND DES)	RH	10282835
	11-A17	14.100	RAIL, F/TOP SI (USE ON VEH W/F/TOP SERIAL# GREATER THAN 21200, # IS ON LBL ON LH RR RAIL OF F/TOP)	94	F67 (2ND DES)	LH	10282836
16.	11-A19	14.310	BUSHING, F/TOP FRT S/RL LINK FRT PIV (PART OF 21) (14.160)	94-02	F67	4	10048833
	11-A19	14.310	BUSHING, F/TOP FRT S/RL LINK RR PIV (PART OF 21) (14.160)	94-02	F67	2	10048833
17.	11-A18	14.140	WASHER, F/TOP S/RL LINK PIV (PART OF 21)	94-02	F67	2	10224655
18.	11-A19	14.310	BOLT, F/TOP FRT S/RL LINK FRT PIV (PART OF 21)	94-02	F67	2	12456253
	11-A19	14.310	BOLT, F/TOP FRT S/RL LINK RR PIV (PART OF 21)	94-02	F67	2	12456253
19.		N.S.	STOP, F/TOP FRT S/RL DOWN (PART OF 21)				
20.		N.S.	PIN, F/TOP S/RL DOWN STOP (PART OF 21)				
21.	11-A18	14.140	LINK, F/TOP FRT S/RL (INCLS 16-20, 22, 64-67)	94-02	F67	RH	12457565
	11-A18	14.140	LINK, F/TOP FRT S/RL (INCLS 16-20, 22, 64-67)	94-02	F67	LH	12457566
22.		N.S.	STUD, F/TOP (BALL) (PART OF 21)				
23.	11-A19	14.310	BUSHING, F/TOP FRT S/RL LINK FRT PIV (PART OF 26) (14.160)	94-02	F67	4	10048833
24.	11-A18	14.140	WASHER, F/TOP S/RL LINK PIV (PART OF 26)	94-02	F67	2	10224655
25.	11-A18	14.140	BOLT, F/TOP S/RL LINK PIV (PART OF 26) (14.310)	94-02	F67	6	12456253
26.	11-A18	14.140	LINK, F/TOP S/RL (INCLS 23-25, 42)	94-02	F67	RH	12522396
	11-A18	14.140	LINK, F/TOP S/RL (INCLS 23-25, 42)	94-02	F67	LH	12522397
27.	11-A19	14.215	BOLT, F/TOP #3 BOW (14.310)	94	F67	4	10224623
	11-A19	14.215	BOLT, F/TOP #3 BOW (BLACK)	95-02	F67	4	10273794
28.	11-A19	14.215	BOW, F/TOP #3 (WHEN USED IN PLC OF BOW 10193295 YOU MUST ALSO USE SCREW 10273794)	94-95	F67	1	10282827
	11-A19	14.215	BOW, F/TOP #3	96-02	F67 (10T, 41T, 56T)	1	10282827
29.	11-N13	11.011	BOLT, F/TOP Q/WDO FIL (14.310)	94	F67	4	10224623
	11-N13	11.011	BOLT, F/TOP Q/WDO FIL (BLACK)	95-02	F67	4	10273792

cardiagn.com

30.	11-A20	14.475	CAM, F/TOP INR ARM LINK (PART OF 50)	94-95	F67	2	10278907
		N.S.	CAM, F/TOP INR ARM LINK (PART OF 50)	96-02			
31.	11-A19	14.310	BOLT, F/TOP INR ARM LINK CAM (PART OF 50)	94-95	F67	2	10224623
		N.S.	BOLT, F/TOP INR ARM LINK CAM (PART OF 50)	96-02			
32.	11-A19	14.310	BUSHING, F/TOP OTR ARM PIV (PART OF 41) (SINTERED BRONZE)	94-02	F67	4	10220885
33.	11-A19	14.310	BUSHING, F/TOP OTR ARM PIV (PART OF 41) (STAINLESS STEEL)	94-02	F67	2	10224662
34.	11-A18	14.140	BUSHING, F/TOP S/RL LINK PIV (PART OF 41) (14.160)	94-02	F67	6	10048833
35.		N.S.	LINK, F/TOP #4 BOW (PART OF 41)				
36.	11-A19	14.215	BOW, F/TOP #4	94-02	F67 (10T, 41T, 56T)	1	12457564
37.	11-A19	14.215	BOLT, F/TOP #4 BOW (14.310)	94-02	F67	4	10224623
38.	11-A18	14.140	WASHER, F/TOP S/RL LINK PIV (PART OF 41)	94-02	F67	2	10224655
40.		8.915	NUT, HEX W/CON WA M8X1.25X9.5 19-OD 9 ZP (F/TOP PIV BRKT) (8.917)	94-02		6	11506117
41.	11-A19	14.310	BRACKET, F/TOP PIV (INCLS 32-35, 38, 43, 44)	94-02	F	RH	12457576
	11-A19	14.310	BRACKET, F/TOP PIV (INCLS 32, 33, 35, 43, 44)	94-02	F	LH	12457577
42.	11-A19	14.157	NUT, F/TOP RR S/RL LINK PIV (PART OF 26)	94-02	F67	2	10224657
43.	11-A19	14.310	BOLT, F/TOP OTR ARM PIV (PART OF 41)	94-02	F67	2	10220884
44.	11-A19	14.310	RETAINER, F/TOP OTR ARM LINK PIV PIN (PART OF 41)	94-02	F67	2	10220883
45.	11-A19	14.310	NUT, F/TOP OTR ARM UP STOP (PART OF 50) (14.157)	94-95	F67	2	10224657
		N.S.	NUT, F/TOP OTR ARM UP STOP (PART OF 50)	96-02			
46.	11-A19	14.310	STOP, F/TOP OTR ARM UP (PART OF 50)	94-95	F67	2	10220783
		N.S.	STOP, F/TOP OTR ARM UP (PART OF 50)	96-02			
47.	11-N13	11.011	FILLER, F/TOP Q/WDO	94-02	F67	RH	10286318
	11-N13	11.011	FILLER, F/TOP Q/WDO	94-02	F67	LH	10286319
48.		N.S.	BOLT, F/TOP OTR ARM DOWN STOP (PART OF 50)				
49.		N.S.	STOP, F/TOP OTR ARM DOWN (PART OF 50)				
50.	11-A19	14.310	ARM, F/TOP OTR (INCLS 30, 31, 45, 46, 48, 49) (*KIT1)	96-02	F67	RH	10282825
	11-A19	14.310	ARM, F/TOP OTR (INCLS 30, 31, 45, 46, 48, 49) (*KIT1)	96-02	F67	LH	10282826
52.		N.S.	SPRING, F/TOP FRT LAT REL BUT (PART OF 7) (*KIT1)				
53.		N.S.	SPRING, F/TOP FRT LAT (PART OF 7) (*KIT1)				

cardiagn.com

54.	11-A16	14.080	**PUSHBUTTON**, F/TOP FRT LAT REL (GRAPHITE)	94-95	F67	1	10225727
	11-A16	14.080	**PUSHBUTTON**, F/TOP FRT LAT REL (GRAPHITE)	96	F67 (12I, 14I, 73I)	1	10225727
	11-A16	14.080	**PUSHBUTTON**, F/TOP FRT LAT REL (NEUTRAL)	96-02	F67 (52I)	1	10276436
	11-A16	14.080	**PUSHBUTTON**, F/TOP FRT LAT REL (GRAPHITE)	97-99	F67 (10I, 14I, 73I)	1	10225727
	11-A16	14.080	**PUSHBUTTON**, F/TOP FRT LAT REL	00-02	F67 (19I, 73I, 92I)	1	10431844
	11-A16	14.080	**PUSHBUTTON**, F/TOP FRT LAT REL	02	F67 (19I, 92I)	1	10431844
55.	11-A16	14.080	**PIN**, F/TOP FRT LAT (1/8X1.00) (PART OF 7) (14.130)	94-02	F67	2	12331796
56.		N.S.	**BRACKET**, F/TOP FRT LAT PIN (PART OF 7)				
57.	11-A20	14.475	**INSULATOR**, F/TOP LAT REL CONT BRKT (PART OF 7)	94-02	F67	2	10284233
58.		N.S.	**LATCH**, F/TOP FRT (PART OF 7)				
59.		N.S.	**SPRING**, F/TOP FRT LAT HOOK (PART OF 7) (*KIT1)				
60.	11-A16	14.080	**HOOK**, F/TOP FRT LAT (PART OF 7)	94-02	F67	2	10277214
61.	11-N28	13.347	**COVER**, F/TOP HDLNG T/PNL (PART OF FLDG TOP ASM (#1)) (BLACK)	94-02	F67	RH	10248215
	11-N28	13.347	**COVER**, F/TOP HDLNG T/PNL (BLACK)	94-02	F67	LH	10248216
62.		N.S.	**SCREW**, F/TOP HDLNG TR FIN PNL COVER				
63.	11-A18	14.130	**PLUG**, F/TOP #1 BOW HOLE (8.153)	94-02	F67	2	10128023
64.		N.S.	**SCREW** (8 - 18 X .38) (ASC# X-00S0-0201-XCZX) PART OF 21				
65.		N.S.	**SPRING-PIVOT ASSIST** (ASC# C-27X0-6672) (PART OF 21)				
66.		N.S.	**RIVET** (M6 X 4.26) (ASC# X-00S0-4015-XYLX) PART OF 21				
67.		N.S.	**BRACKET-SPRING-RH** (ASC#C-27X0-0766) (PART OF 21)				
		N.S.	**BRACKET-SPRING-LH** (ASC#C-27X0-0767) PART OF 21				
68.		N.S.	**BUSHING**, F/TOP S/RL LINK PIV (PART OF 9)				
69.		N.S.	**NUT**, F/TOP FRT S/RL LINK EYEBOLT ((ASC# X-00S0-2865-XZAX) PART OF 9)				
70.	11-A16	14.080	**PIN**, F/TOP FRT LAT (1/8X1.00) (14.130)	94-02	F67	2	12331796
71.		N.S.	**PIN**-LATCH HDL. ASC# C-27XO-7416				

cardiagn.com

SERVICE KITS

1.	11–A16	14.080	**SPRING**, F/TOP FRT LAT (INCLS 51–53, 59)	**94–02**	F67	1	**12522403**

RPO DEFINITIONS

10I – INTERIOR TRIM – ARCTIC WHITE
10T – VINYL TOP COLOR,ARCTIC WHITE
12I – INTERIOR TRIM GRAPHITE
14I – INTERIOR TRIM LT GRAY
19I – INTERIOR TRIM,BLACK
41T – VINYL TOP COLOR,BLACK
52I – INTERIOR TRIM LIGHT NEUTRAL
56T – VINYL TOP COLOR,MED NEUTRAL
62T – VINYL TOP COLOR,LIGHT BEECHWOOD METALLIC
73I – INTERIOR TRIM,FLAME RED
92I – INTERIOR TRIM SHALE/PEWTER

cardiagn.com

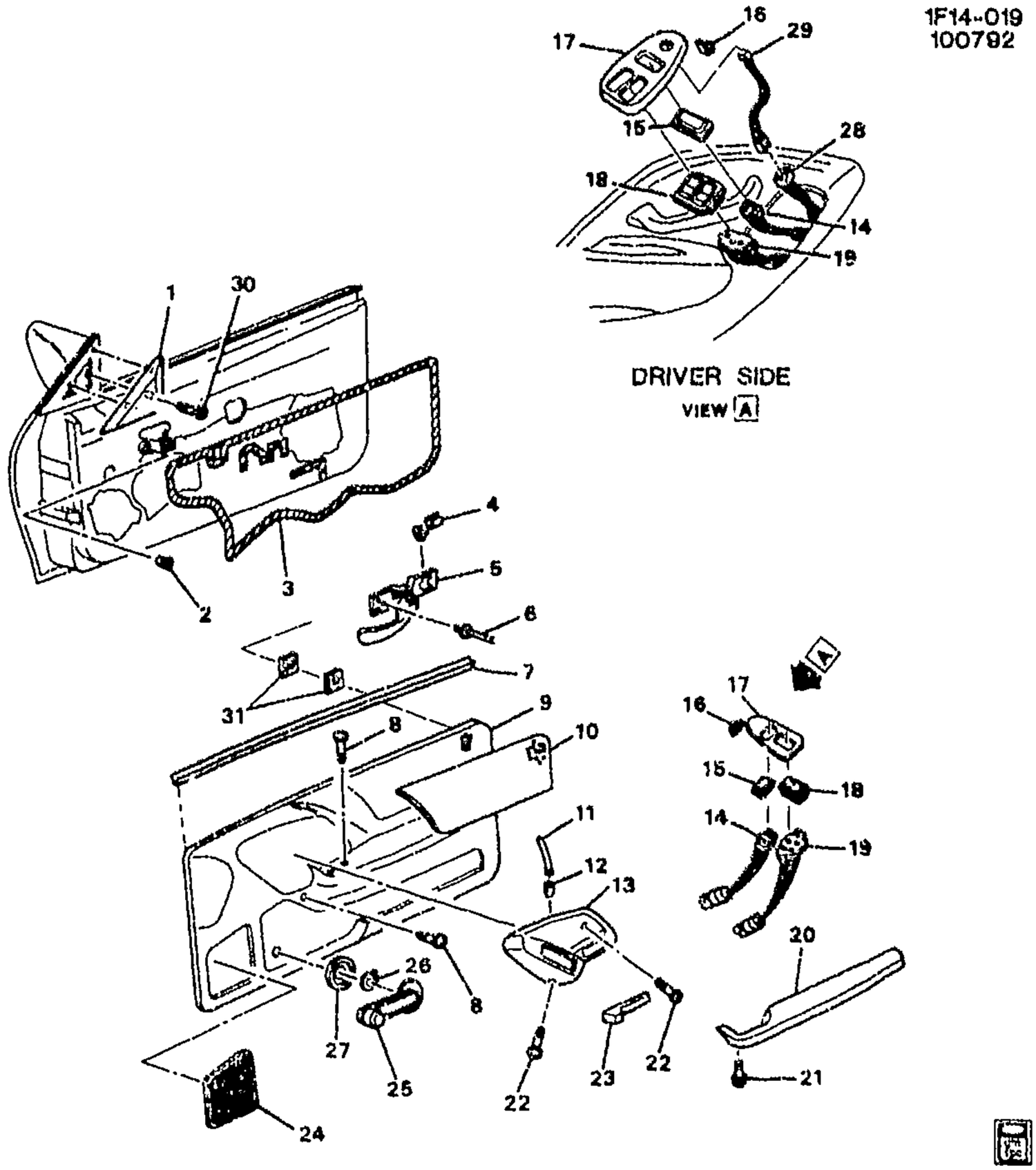

1F14-019

1993-2002 F TRIM/FRONT DOOR

1.	11-N6	10.186	BEZEL, O/S RR VIEW MIR (R/CON)	93-02	F	RH	10235278
	11-N6	10.186	BEZEL, O/S RR VIEW MIR (R/CON)	93-98	F (DG7)	LH	10235279
	11-N6	10.186	BEZEL, O/S RR VIEW MIR (R/CON)	99-02	F (DD9, DG7)	LH	10235279
	11-N6	10.186	BEZEL, O/S RR VIEW MIR (R/CON)	93-02	F (D35)	LH	10282729
	11-N6	10.186	BEZEL, O/S RR VIEW MIR (R/CON)	93-99	F (DD9) (EXPORT)	LH	10235279
2.	11-A25	14.686	NUT, FRT S/D A/RST	93-02	F	6	10230422
3.	11-N10	10.355	DEFLECTOR, FRT S/D WAT	93-02	F	RH	10279946
	11-N10	10.355	DEFLECTOR, FRT S/D WAT	93-02	F	LH	10279947

cardiagn.com

4.	11-N11	10.515	**CLIP**, FRT S/D I/S HDL ROD (RED) (NYLON) (10.527)	93-02	F	LH	16627328
	11-N11	10.515	**CLIP**, FRT S/D I/S HDL ROD (RED) (SNAP-ON) (10.565)	93-02	F	RH	16607593
5.	11-N11	10.512	**HANDLE**, FRT S/D I/S	93-02	F	RH	16628402
	11-N11	10.512	**HANDLE**, FRT S/D I/S	93-02	F	LH	16628403
6.		8.967	**RIVET-3/16X.430**, STYLE 1C (FRT S/D I/S HDL)	93-02		2	9440392
7.	11-N11	10.710	**SEALING STRIP**, FRT S/D WDO INR (PART OF 9)	93-02	F	RH	16651944
	11-N11	10.710	**SEALING STRIP**, FRT S/D WDO INR (PART OF 9)	93-02	F	LH	16651945
8.		8.977	**SCREW**, PAN HD, M6.3X1.8X40, 38 THD, 12 OD, 6010M, TAP, 6138M AP PT (FRT S/D A/RST)	93-02	F	6	11516030
9.		DISCON	**TRIM**, FRT S/D (INCLS 7, 10, 20, 21, 24) (GRAPHITE)	93	F (B5A, 12I)	RH	10229790
		DISCON	**TRIM**, FRT S/D (INCLS 7, 10, 20, 21, 24) (GRAPHITE)	93	F (B5A, 12I)	LH	10229791
	11-A24	14.685	**TRIM**, FRT S/D (INCLS 7, 10, 20, 21, 24) (GRAPHITE)	93-95	F (12B)	RH	10270367
	11-A24	14.685	**TRIM**, FRT S/D (INCLS 7, 10, 20, 21, 24) (GRAPHITE)	93-95	F (12B)	LH	10270368
		DISCON	**TRIM**, FRT S/D (INCLS 7, 10, 20, 21, 24) (BEIGE)	93-95	F (64B)	RH	10270369
	11-A24	14.685	**TRIM**, FRT S/D (INCLS 7, 10, 20. 21, 24) (BEIGE)	93-95	F (64B)	LH	10270370
	11-A24	14.685	**TRIM**, FRT S/D (INCLS 7, 10, 20, 21, 24) (GRAY)	93-95	F (14B)	RH	10270371
	11-A24	14.685	**TRIM**, FRT S/D (INCLS 7, 10, 20, 21, 24) (GRAY)	93-95	F (14B)	LH	10270372
	11-A24	14.685	**TRIM**, FRT S/D (INCLS 7, 10, 20, 21, 24) (RED)	94-95	F (73B)	RH	10270375
	11-A24	14.685	**TRIM**, FRT S/D (INCLS 7, 10, 20, 21, 24) (RED)	94-95	F (73B)	LH	10270376
	11-A24	14.685	**TRIM**, FRT S/D (INCLS 7, 10, 20, 21, 24) (BEIGE)	94-95	F (642)	RH	10270379
	11-A24	14.685	**TRIM**, FRT S/D (INCLS 7, 10, 20, 21, 24) (BEIGE)	94-95	F (642)	LH	10270380
	11-A24	14.685	**TRIM**, FRT S/D (INCLS 7, 10, 20, 21, 24) (GRAPHITE)	96	F (12B)	RH	10264704
	11-A24	14.685	**TRIM**, FRT S/D (INCLS 7, 10, 20, 21, 24) (GRAPHITE)	96	F (12B)	LH	10264705
	11-A24	14.685	**TRIM**, FRT S/D (INCLS 7, 10, 20, 21, 24) (NEUTRAL)	96	F (52B)	RH	10264708
	11-A24	14.685	**TRIM**, FRT S/D (INCLS 7, 10, 20, 21, 24) (NEUTRAL)	96	F (52B)	LH	10264709
	11-A24	14.685	**TRIM**, FRT S/D (INCLS 7, 10, 20, 21, 24) (GRAY)	96	F (14B)	RH	10266039
	11-A24	14.685	**TRIM**, FRT S/D (INCLS 7, 10, 20, 21, 24) (GRAY)	96	F (14B)	LH	10266040
	11-A24	14.685	**TRIM**, FRT S/D (INCLS 7, 10, 20, 21, 24) (RED)	96	F (73B)	RH	10266041
	11-A24	14.685	**TRIM**, FRT S/D (INCLS 7, 10, 20, 21, 24) (RED)	96	F (73B)	LH	10266042
	11-A24	14.685	**TRIM**, FRT S/D (INCLS 7, 10, 20, 21, 24) (GRAPHITE)	94-96	F (122)	RH	10270381

cardiagn.com

						1F14-019
11-A24	14.685	TRIM, FRT S/D (INCLS 7, 10, 20, 21, 24) (GRAPHITE)	94-95	F (122)	LH	10270382
11-A24	14.685	TRIM, FRT S/D (INCLS 7, 10, 20, 21, 24) (NEUTRAL)	96	F (522)	RH	10270383
11-A24	14.685	TRIM, FRT S/D (INCLS 7, 10, 20, 21, 24) (NEUTRAL)	96	F (522)	LH	10270384
11-A24	14.685	TRIM, FRT S/D (INCLS 7, 10, 20, 21, 24) (GRAY)	97	F (10C, 103, 142)	RH	10277295
11-A24	14.685	TRIM, FRT S/D (INCLS 7, 10, 20, 21, 24) (GRAY)	97	F (10C, 103, 142)	LH	10277296
11-A24	14.685	TRIM, FRT S/D (INCLS 7, 10, 20, 21, 24) (NEUTRAL)	97	F (522)	RH	10277297
11-A24	14.685	TRIM, FRT S/D (INCLS 7, 10, 20, 21, 24) (NEUTRAL)	97	F (522)	LH	10277298
11-A24	14.685	TRIM, FRT S/D (INCLS 7, 10, 20, 21, 24) (GRAY)	97	F (14B)	RH	10299062
11-A24	14.685	TRIM, FRT S/D (INCLS 7, 10, 20, 21, 24) (GRAY)	97	F (14B)	LH	10299063
11-A24	14.685	TRIM, FRT S/D (INCLS 7, 10, 20, 21, 24) (NEUTRAL)	97	F (52B)	RH	10299064
11-A24	14.685	TRIM, FRT S/D (INCLS 7, 10, 20, 21, 24) (NEUTRAL)	97	F (52B)	LH	10299065
11-A24	14.685	TRIM, FRT S/D (INCLS 7, 10, 20, 21, 24) (PEWTER)	97	F (92B)	RH	10299066
11-A24	14.685	TRIM, FRT S/D (INCLS 7, 10, 20, 21, 24) (PEWTER)	97	F (92B)	LH	10299067
11-A24	14.685	TRIM, FRT S/D (INCLS 7, 10, 20, 21, 24) (RED)	97	F (73B)	RH	10299068
11-A24	14.685	TRIM, FRT S/D (INCLS 7, 10, 20, 21, 24) (RED)	97	F (73B)	LH	10299069
11-A24	14.685	TRIM, FRT S/D (INCLS 7, 10, 20, 21, 24) (NEUTRAL)	98-99	F (52B)	RH	10288457
11-A24	14.685	TRIM, FRT S/D (INCLS 7, 10, 20, 21, 24) (NEUTRAL)	98-99	F (52B)	LH	10288459
11-A24	14.685	TRIM, FRT S/D (INCLS 7, 10, 20, 21, 24) (RED)	98-99	F (73B)	RH	10288463
11-A24	14.685	TRIM, FRT S/D (INCLS 7, 10, 20, 21, 24) (RED)	98-99	F (73B)	LH	10288464
11-A24	14.685	TRIM, FRT S/D (INCLS 7, 10, 20, 21, 24) (GRAY)	98-99	F (14B)	RH	10290195
11-A24	14.685	TRIM, FRT S/D (INCLS 7, 10, 20, 21, 24) (GRAY)	98-99	F (14B)	LH	10290196
11-A24	14.685	TRIM, FRT S/D (INCLS 7, 10, 20, 21, 24) (NEUTRAL)	98-99	F (524)	RH	10290635
11-A24	14.685	TRIM, FRT S/D (INCLS 7, 10, 20, 21, 24) (NEUTRAL)	98-99	F (524)	LH	10290636
11-A24	14.685	TRIM, FRT S/D (INCLS 7, 10, 20, 21, 24) (GRAY)	98-99	F (144)	RH	10290637
11-A24	14.685	TRIM, FRT S/D (INCLS 7, 10, 20, 21, 24) (GRAY)	98-99	F (144)	LH	10290638
11-A24	14.685	TRIM, FRT S/D (INCLS 7, 10, 20, 21, 24) (NEUTRAL)	98-99	F (52D)	RH	10290641
11-A24	14.685	TRIM, FRT S/D (INCLS 7, 10, 20, 21, 24) (NEUTRAL)	98-99	F (52D)	LH	10290642
11-A24	14.685	TRIM, FRT S/D (INCLS 7, 10, 20, 21, 24) (GRAY)	98-99	F (14D)	RH	10290643
11-A24	14.685	TRIM, FRT S/D (INCLS 7, 10, 20, 21, 24) (GRAY)	98-99	F (14D)	LH	10290644

cardiagn.com

	11–A24	14.685	TRIM, FRT S/D (INCLS 7, 10, 20, 21, 24) (GRAY)	98–99	F (102, 142)	RH	10297789
	11–A24	14.685	TRIM, FRT S/D (INCLS 7, 10, 20, 21, 24) (GRAY)	98–99	F (102, 142)	LH	10297790
	11–A24	14.685	TRIM, FRT S/D (INCLS 7, 10, 20, 21, 24) (NEUTRAL)	98–99	F (522)	RH	10297791
	11–A24	14.685	TRIM, FRT S/D (INCLS 7, 10, 20, 21, 24) (NEUTRAL)	98–99	F (522)	LH	10297792
	11–A24	14.685	TRIM, FRT S/D (INCLS 7, 10, 20, 21, 24) (EBONY) (UPLEVEL)	00–02	F (192)	RH	10410253
	11–A24	14.685	TRIM, FRT S/D (INCLS 7, 10, 20, 21, 24) (EBONY) (UPLEVEL)	00–02	F (192)	LH	10410254
	11–A24	14.685	TRIM, FRT S/D (INCLS 7, 10, 20, 21, 24) (RED)	00–01	F (73B)	RH	10414678
	11–A24	14.685	TRIM, FRT S/D (INCLS 7, 10, 20, 21, 24) (RED)	00–01	F (73B)	LH	10414679
	11–A24	14.685	TRIM, FRT S/D (INCLS 7, 10, 20, 21, 24) (EBONY)	00–02	F (19B)	RH	10414680
	11–A24	14.685	TRIM, FRT S/D (INCLS 7, 10, 20, 21, 24) (EBONY)	00–02	F (19B)	LH	10414681
	11–A24	14.685	TRIM, FRT S/D (INCLS 7, 10, 20, 21, 24) (PEWTER)	00–02	F (92B)	RH	10416660
	11–A24	14.685	TRIM, FRT S/D (INCLS 7, 10, 20, 21, 24) (PEWTER)	00–02	F (92B)	LH	10416661
	11–A24	14.685	TRIM, FRT S/D (INCLS 7, 10, 20, 21, 24) (NEUTRAL) (UPLEVEL)	00–02	F (522)	LH	10421403
	11–A24	14.685	TRIM, FRT S/D (INCLS 7, 10, 20, 21, 24) (NEUTRAL) (UPLEVEL)	00–02	F (522)	RH	10421404
	11–A24	14.685	TRIM, FRT S/D (INCLS 7, 10, 20, 21, 24) (EBONY)	00–02	F (194) (EXPORT)	RH	10410190
	11–A24	14.685	TRIM, FRT S/D (INCLS 7, 10, 20, 21, 24) (EBONY)	00–02	F (194) (EXPORT)	LH	10410191
	11–A24	14.685	TRIM, FRT S/D (INCLS 7, 10, 20, 21, 24) (EBONY)	00–02	F (19D) (EXPORT)	RH	10410206
	11–A24	14.685	TRIM, FRT S/D (INCLS 7, 10, 20, 21, 24) (EBONY)	00–02	F (19D) (EXPORT)	LH	10410207
	11–A24	14.685	TRIM, FRT S/D (INCLS 7, 10, 20, 21, 24) (NUETRAL)	00–02	F (524) (EXPORT)	RH	10421373
	11–A24	14.685	TRIM, FRT S/D (INCLS 7, 10, 20, 21, 24) (NEUTRAL)	00–02	F (524) (EXPORT)	LH	10421400
10.		N.S.	INSERT, FRT S/D T/PNL (PART OF 9)				
11.	11–N11	10.777	SOCKET, SI WDO SW BULB (W/LEADS) (4.022) (AC–DELCO #LS28)	93–02	F	2	12125966
12.		8.991	BULB–WEDGE–TRADE NO. 70 (FRT S/D C/LP) (AC–DELCO #L70)	93–02	F	2	9437979
13.	11–N11	10.515	BEZEL, FRT S/D I/S HDL	93–96	F	RH	10230461
	11–N11	10.515	BEZEL, FRT S/D I/S HDL	93–96	F	LH	10230462
	11–N11	10.515	BEZEL, FRT S/D I/S HDL	00–02	F	RH	10413475
	11–N11	10.515	BEZEL, FRT S/D I/S HDL	00–02	F	LH	10413476
	11–N11	10.515	BEZEL, FRT S/D I/S HDL (INCLS BZL, INSL, CNDCT)	97–99	F	RH	10288484
	11–N11	10.515	BEZEL, FRT S/D I/S HDL (INCLS BZL, INSL, CNDCT)	07–99	F	LH	10288485

cardiagn.com

14.	11-N10	10.485	**CONNECTOR**, SW-DR LK (5-WAY, W/LEADS) (2.535) (AC-DELCO #PT254)	93-02	F	2	12101862
15.	11-N10	10.485	**SWITCH**, DR LK (AC-DELCO #D1411D)	93	F (AU3)	RH	10402831
	11-N10	10.485	**SWITCH**, DR LK (AC-DELCO #D1410D)	93	F (AU3)	LH	10402832
	11-N10	10.485	**SWITCH**, DR LK (AC-DELCO #10402835)	94-96	F (AU3)	RH	10402835
	11-N10	10.485	**SWITCH**, DR LK (AC-DELCO #10402836)	94-96	F (AU3)	LH	10402836
	11-N10	10.485	**SWITCH**, DR LK	97-02	F (AU3)	RH	10402839
	11-N10	10.485	**SWITCH**, DR LK	97-02	F (AU3)	LH	10402840
	11-N10	10.485	**SWITCH**, DR LK (ATTACHES TO END OF LK CYL) (ADDITIONAL WIRE MAY BE LONGER THAN ORIG, TAPE OFF EXTRA)	97	F (52B)	LH	20504725
16.	11-N9	10.252	**CLIP**, ACSRY SW PNL (10.485)	93-02	F	2	9722397
17.	11-N9	10.256	**COVER**, ACSRY SW OPG (10.777)	93-96	F (EXC AU3, A31)	RH	10238853
	11-N9	10.256	**COVER**, ACSRY SW OPG (10.777)	93-96	F (D35) (EXC AU3, A31)	LH	10238854
	11-N9	10.256	**COVER**, ACSRY SW OPG (10.777)	97-99	F (EXC AU3, A31)	RH	10288765
	11-N9	10.256	**COVER**, ACSRY SW OPG (10.777)	97-99	F (D35) (EXC AU3, A31)	LH	10288766
	11-N9	10.256	**COVER**, ACSRY SW OPG (10.777)	00-02	F (EXC AU3, A31)	RH	10411468
	11-N9	10.256	**COVER**, ACSRY SW OPG (10.777)	00-02	F (D35) (EXC AU3, A31)	LH	10411469
	11-N11	10.777	**PANEL**, ACSRY SW (10.252)	93-96	F (AU3, A31)	RH	10238877
	11-N11	10.777	**PANEL**, ACSRY SW	97-99	F (AU3, A31)	RH	10288773
	11-N11	10.777	**PANEL**, ACSRY SW	97-99	F (AU3, A31, DD9, DG7)	LH	10288774
	11-N11	10.777	**PANEL**, ACSRY SW	97-99	F (AU3, D35) (EXC A31)	LH	10288775
	11-N11	10.777	**PANEL**, ACSRY SW	97-99	F (AU3) (EXC A31)	RH	10288776
	11-N11	10.777	**PANEL**, ACSRY SW	00-02	F (AU3, A31)	RH	10412603
	11-N11	10.777	**PANEL**, ACSRY SW	00-02	F (AU3, A31, DD9, DG7)	LH	10412604
	11-N11	10.777	**PANEL**, ACSRY SW (LESS SW) (10.252)	93-96	F (AU3, A31, DG7)	LH	10238878
	11-N11	10.777	**PANEL**, ACSRY SW (LESS SW) (10.252)	93-96	F (AU3, D35) (EXC A31)	LH	10238879
	11-N11	10.777	**PANEL**, ACSRY SW (LESS SW) (10.252)	93-96	F (AU3) (EXC A31)	RH	10238880
	11-N11	10.777	**PANEL**, ACSRY SW (LESS SW) (10.252)	93-96	F (AU3, A31, DD9) (EXPORT)	LH	10238878
18.	11-N11	10.777	**SWITCH**, SI WDO	93	F (A31)	RH	10402833
	11-N11	10.777	**SWITCH**, SI WDO	93	F (A31)	LH	10402834
	11-N11	10.777	**SWITCH**, SI WDO	94-96	F (AU3, A31)	RH	10402837
	11-N11	10.777	**SWITCH**, SI WDO	94-96	F (AU3, A31, DG7)	LH	10402838
	11-N11	10.777	**SWITCH**, SI WDO	97-02	F (AU3, A31)	RH	10402841
	11-N11	10.777	**SWITCH**, SI WDO	97-02	F (AU3, A31, DD9, DG7)	LH	10402842
	11-N11	10.777	**SWITCH**, SI WDO	94-96	F (AU3, A31, DD9) (EXPORT)	LH	10402838

cardiagn.com

19.	11-N11	10.777	**CONNECTOR**, SW-SI WDO (5-WAY F, W/LEADS) (2.535) (AC-DELCO #PT187)	93-02	F	RH	12101915
	11-N11	10.777	**CONNECTOR**, SW-SI WDO (6-WAY F, W/LEADS) (2.535) (AC-DELCO #PT188)	93-97	F	LH	12101916
	11-N11	10.777	**CONNECTOR**, SW-SI WDO (6F PIN GRIP SER PWR WDO SW) (6-WAY) (W/LEADS) (AC-DELCO #PT457)	93-97	F	AR	12117324
	11-N11	10.777	**CONNECTOR**, SW-SI WDO (6F PIN GRIP SER PWR WDO SW) (6-WAY) (W/LEADS) (AC-DELCO #PT457)	99-02	F	1	12117324
20.	11-A25	14.686	**ARMREST**, FRT S/D (PART OF 9) (GRAPHITE)	93	F (12I)	RH	16651902
	11-A25	14.686	**ARMREST**, FRT S/D (PART OF 9) (GRAPHITE)	93	F (12I)	LH	16651903
		DISCON	**ARMREST**, FRT S/D (PART OF 9) (BEIGE)	93-95	F (64I)	RH	16651904
		DISCON	**ARMREST**, FRT S/D (PART OF 9) (BEIGE)	93-95	F (64I)	LH	16651905
		DISCON	**ARMREST**, FRT S/D (PART OF 9) (GRAY)	93-95	F (14I)	RH	16651906
		DISCON	**ARMREST**, FRT S/D (PART OF 9) (GRAY)	93-95	F (14I)	LH	16651907
	11-A25	14.686	**ARMREST**, FRT S/D (PART OF 9) (GRAPHITE)	94-95	F (12I, 73I)	RH	16651902
	11-A25	14.686	**ARMREST**, FRT S/D (PART OF 9) (GRAPHITE)	94-95	F (12I, 73I)	LH	16651903
	11-A25	14.686	**ARMREST**, FRT S/D (PART OF 9) (NEUTRAL)	96-02	F (52I)	RH	16633068
	11-A25	14.686	**ARMREST**, FRT S/D (PART OF 9) (NEUTRAL)	96-99	F (52I)	LH	16633069
	11-A25	14.686	**ARMREST**, FRT S/D (PART OF 9) (GRAPHITE)	96	F (12I, 73I, 14I)	RH	16651902
	11-A25	14.686	**ARMREST**, FRT S/D (PART OF 9) (GRAPHITE)	96	F (12I, 73I, 14I)	LH	16651903
	11-A25	14.686	**ARMREST**, FRT S/D (PART OF 9) (GRAY)	97	F (10I, 14I, 92I, 73I)	RH	16632714
	11-A25	14.686	**ARMREST**, FRT S/D (PART OF 9) (GRAY)	97	F (10I, 14I, 92I, 73I)	LH	16632715
	11-A25	14.686	**ARMREST**, FRT S/D (PART OF 9) (GRAY)	98-99	F (73I, 14I, 10I)	RH	16632714
	11-A25	14.686	**ARMREST**, FRT S/D (PART OF 9) (GRAY)	98-99	F (73I, 14I, 10I)	LH	16632715
	11-A25	14.686	**ARMREST**, FRT S/D (PART OF 9) (NEUTRAL)	00-02	F (52I)	LH	16633069
	11-A25	14.686	**ARMREST**, FRT S/D (PART OF 9)	00-02	F (19I)	RH	16638528
	11-A25	14.686	**ARMREST**, FRT S/D (PART OF 9)	00-01	F (73B)	RH	16638528
	11-A25	14.686	**ARMREST**, FRT S/D (PART OF 9)	00-02	F (19I)	LH	16638529
	11-A25	14.686	**ARMREST**, FRT S/D (PART OF 9)	00-01	F (73B)	LH	16638529
21.		8.913	**SCREW-PAN HD**, M6X1X40, 38 THD, 12 OD, 9.8, NZ, MACH, C/R (FRT S/D A/RST) (PART OF 9) ...	93-02	.....	2	11515668
22.	11-N11	10.515	**BOLT**, FRT S/D I/S HDL BZL (M4.2X1.15X20) (12.810)	93-02	F	4	10092102
23.	11-N11	10.559	**KNOB**, FRT S/D LKG ROD	93-02	F	2	10132223

cardiagn.com

							1F14-019
24.	11-N5	9.665	**GRILLE**, RDO FRT S/D SPKR (PART OF 9) (GRAY)	93-97	F	RH	16671266
	11-N5	9.665	**GRILLE**, RDO FRT S/D SPKR (PART OF 9) (GRAY)	93-97	F	LH	16671267
	11-N5	9.665	**GRILLE**, RDO FRT S/D SPKR (USE W/TRIM CODE ENDING IN 4) (PART OF 9) (GRAY)	98	F	RH	16671266
	11-N5	9.665	**GRILLE**, RDO FRT S/D SPKR (USE W/TRIM CODE ENDING IN D) (PART OF 9) (GRAY)	98	F	LH	16671267
	11-N5	9.665	**GRILLE**, RDO FRT S/D SPKR (USE W/TRIM CODES ENDING IN 2, 4, B, D) (PART OF 9) (GRAY)	99-02	F	RH	16671266
	11-N5	9.665	**GRILLE**, RDO FRT S/D SPKR (USE W/TRIM CODES ENDING IN 2, 4, B, D) (PART OF 9) (GRAY)	99-02	F	LH	16671267
25.	11-N13	10.797	**HANDLE**, FRT S/D WDO REG (INCLS 26) (BLACK)	93-96	F (EXC A31)	2	16600094
	11-N13	10.797	**HANDLE**, FRT S/D WDO REG (HIGH GLOSS SURF APPEARANCE) (INCLS 26) (BLACK)	97	F (EXC A31) (1ST DES)	2	16600094
	11-N13	10.797	**HANDLE**, FRT S/D WDO REG (LOW GLOSS SURF APPEARANCE) (INCLS 26)	97	F (EXC A31) (2ND DES)	2	22656167
	11-N13	10.797	**HANDLE**, FRT S/D WDO REG	98-02	F (EXC A31)	2	22656167
26.	11-N13	10.806	**CLIP**, FRT S/D WDO REG HDL (PART OF 25) (10.512)	93-02	F (EXC A31)	1	4168122
27.	11-N13	10.806	**SPACER**, FRT S/D WDO REG HDL	93-02	F (EXC A31)	2	10193360
28.	11-N6	10.186	**CONNECTOR**, SW-O/S RR VIEW MIR R/CON (8-WAY M) (W/LEADS) (2.535) (AC-DELCO #PT219)	93-97	F	AR	12101827
	11-N6	10.186	**CONNECTOR**, SW-O/S RR VIEW MIR R/CON (BLACK) (4-WAY M) (W/LEADS) (2.535) (AC-DELCO #PT144)	98-02	F	2	12035536
	11-N6	10.186	**CONNECTOR**, SW-O/S RR VIEW MIR R/CON (BLACK) (8-WAY F) (W/LEADS) (2.485) (AC-DELCO #PT709)	98	F (AU3, A31, DD9, DG7, UZ7)	1	12126438
	11-N6	10.186	**CONNECTOR**, SW-O/S RR VIEW MIR R/CON (8-WAY M) (W/LEADS) (2.535) (AC-DELCO #PT219)	00-02	F (AU3, A31, DD9, DG7, UQ0, U59)	1	12101827
29.	11-N6	10.186	**SWITCH**, O/S R/CON RR VIEW MIR SEL	93	F (DG7)	LH	10098581
	11-N6	10.186	**SWITCH**, O/S R/CON RR VIEW MIR SEL	94-97	F (AU3, A31)	LH	10195585
	11-N6	10.186	**SWITCH**, O/S R/CON RR VIEW MIR SEL	93	F (DD9) (EXPORT)	LH	10098581
	11-N6	10.186	**SWITCH**, O/S R/CON RR VIEW MIR SEL	98-02	F (AU3, A31, DD9, DG7) (EXPORT)	LH	10195585
30.		8.977	**SCREW**, OV HD C/S W/TRIM WA (4.2X1.41X30) AB PT TORX 6010M	93-02		AR	11516302

cardiagn.com

								1F14-019
31.	11-A23	14.683	SEAL, FRT S/D T/PNL RET	94-02	F	.....	4	10232598
	11-A23	14.683	SEAL, FRT S/D T/PNL RET (2 RH SI & 2 LH SI)	93	F	.....	4	10232598

RPO DEFINITIONS

AU3 – LOCK,SIDE DOOR,ELECTRIC
A31 – WINDOW,ELECTRIC OPERATED,SIDE
B5A – PACKAGE – "INDY COUPE"
DD9 – MIRROR,O/S,RH & LH REM CTL ELEC,BREAKAWAY(PAINTED)(EXPORT)
DD9 – MIRROR,OUTSIDE,RH AND LH REMOTE CONTROL ELECTRIC,BREAKAWAY(PAINTED)
DG7 – MIRROR,OUTSIDE,RH AND LH REMOTE CONTROL,ELECTRIC(PAINTED)
D35 – MIRROR,O/S LH REM RH DIRECT CTL,PAINTED
UQ0 – SPEAKER SYSTEM,4,DUAL FRONT DOOR MOUNTED,DUAL STANDARD RANGE PACKAGE SHELF/QUARTER
UZ7 – SPEAKER SYSTEM 8, QUAD FRT DR MTD, DUAL SAIL PNL, DUAL RR HATCH, AMPLIFIER
U59 – SPEAKER SYSTEM 8, QUAD FRT DR MTD, QUAD SAIL PNL, AMPLIFIER
10C – TRIM COMBINATION CLOTH, ARCTIC WHITE (97)
10I – INTERIOR TRIM – ARCTIC WHITE
102 – TRIM COMBINATION LEATHER, ARCTIC WHITE (2) (94)
103 – TRIM COMBINATION – LEATHER,ARCTIC WHITE
12B – TRIM COMBINATION CLOTH, GRAPHITE (B) (92)
12I – INTERIOR TRIM GRAPHITE
122 – TRIM COMBINATION LEATHER,GRAPHITE
14B – TRIM COMBINATION – CLOTH, DK GRAY
14D – TRIM COMBINATION CLOTH, LT GRAY
14I – INTERIOR TRIM LT GRAY
142 – TRIM COMBINATION LEATHER, LT GRAY
144 – TRIM COMBINATION LEATHER, LT GRAY
19B – TRIM COMBINATION,CLOTH,BLACK
19D – TRIM COMBINATION,CLOTH,BLACK
19I – INTERIOR TRIM,BLACK
192 – TRIM COMBINATION,BLACK LEATHER
194 – TRIM COMBINATION,BLACK LEATHER
52B – TRIM COMBINATION CLOTH, LT NEUTRAL
52D – TRIM COMBINATION CLOTH, NEUTRAL
52I – INTERIOR TRIM LIGHT NEUTRAL
522 – TRIM COMBINATION – LEATHER, NEUTRAL
524 – TRIM COMBINATION LEATHER, NEUTRAL
64B – TRIM COMBINATION CLOTH, LT BEIGE
64I – INTERIOR TRIM,LIGHT BEIGE
642 – TRIM COMBINATION LEATHER, LT BEIGE
73B – TRIM COMBINATION,CLOTH,FLAME RED
73I – INTERIOR TRIM,FLAME RED
92B – TRIM COMBINATION CLOTH, SHALE/PEWTER
92I – INTERIOR TRIM SHALE/PEWTER

cardiagn.com

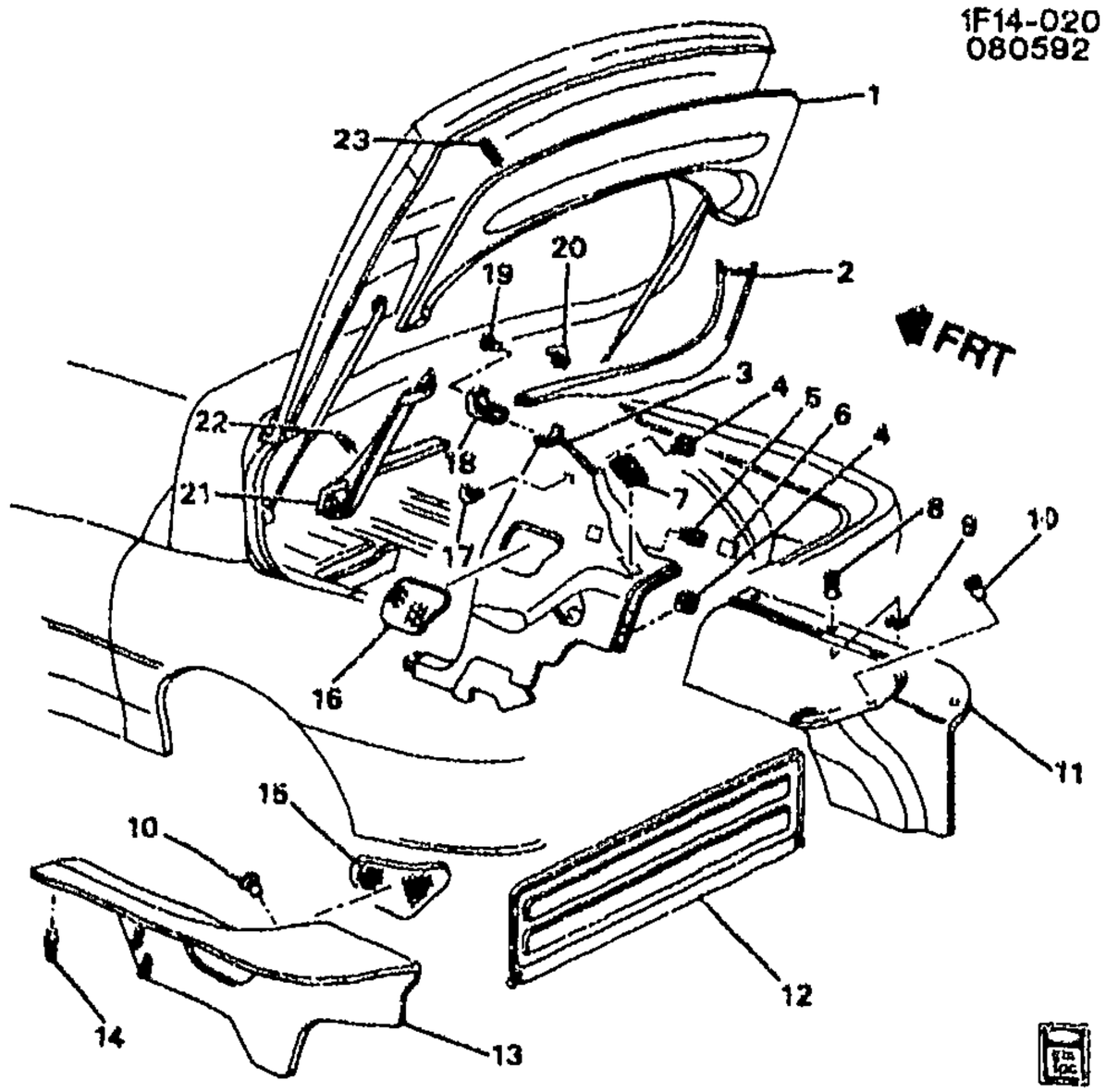

1993-2002 F87 TRIM/INTERIOR REAR

1.	11-N22	12.190	COVER, R/CMPT L/WDO INR PNL (GRAPHITE)	93-95	F (64I)	1	12458774
	11-N22	12.190	COVER, R/CMPT L/WDO INR PNL (NEUTRAL)	96-02	F87 (52I)	1	10423878
	11-N22	12.190	COVER, R/CMPT L/WDO INR PNL (GRAPHITE)	98-02	F87	1	10416052
	11-N22	12.190	COVER, R/CMPT L/WDO INR PNL (GRAY)	98-01	F87 (10I, 14I, 73I)	1	10423879
	11-N22	12.190	COVER, R/CMPT L/WDO INR PNL (GRAPHITE)	98	F87	1	12458774
	11-N22	12.190	COVER, R/CMPT L/WDO INR PNL (EBONY)	00-02	F87 (19I, 92I)	1	10423881
2.	11-N22	12.190	MOLDING, R/CMPT L/WDO SI FIN (GRAY)	93-96	F (14I)	RH	16670360
	11-N22	12.190	MOLDING, R/CMPT L/WDO SI FIN (GRAPHITE)	93-96	F87 (12I)	RH	16670356
	11-N22	12.190	MOLDING, R/CMPT L/WDO SI FIN (GRAPHITE)	93-95	F87 (64I)	RH	16670356
	11-N22	12.190	MOLDING, R/CMPT L/WDO SI FIN (NEUTRAL)	96	F (52I)	RH	16672106
	11-N22	12.190	MOLDING, R/CMPT L/WDO SI FIN (GRAY)	97	F87 (10I, 14I, 73I, 92I)	RH	16633462
	11-N22	12.190	MOLDING, R/CMPT L/WDO SI FIN (NEUTRAL)	97-02	F87 (52I)	RH	16672106
	11-N22	12.190	MOLDING, R/CMPT L/WDO SI FIN (GRAY)	98-99	F87 (10I, 14I, 73I)	RH	16633462

cardiagn.com

3.	11-D9	15.100	PANEL, QTR TR (GRAPHITE) (PAINT TO MATCH ALL OTHER COLORS)	93-96	F (12I)	LH	16671255
	11-D9	15.100	PANEL, QTR TR (GRAY)	93-96	F87 (14I)	RH	16671258
	11-D9	15.100	PANEL, QTR TR (GRAPHITE) (PAINT TO MATCH ALL OTHER COLORS)	93-96	F87 (12I)	RH	16671254
	11-D9	15.100	PANEL, QTR TR (NEUTRAL)	96	F (52I)	RH	16672100
	11-D9	15.100	PANEL, QTR TR (NEUTRAL)	96	F (52I)	LH	16672101
	11-D9	15.100	PANEL, QTR TR (GRAY)	97	F87 (10I, 14I, 73I, 92I)	RH	16633455
	11-D9	15.100	PANEL, QTR TR (GRAY)	97	F87 (10I, 14I, 73I, 92I)	LH	16633711
	11-D9	15.100	PANEL, QTR TR (NEUTRAL)	97-02	F87 (52I)	RH	16672100
	11-D9	15.100	PANEL, QTR TR (NEUTRAL)	97-02	F87 (52I)	LH	16672101
	11-D9	15.100	PANEL, QTR TR (GRAY)	98-99	F87 (10I, 14I, 73I)	RH	16633455
	11-D9	15.100	PANEL, QTR TR (GRAY)	98-99	F87 (10I, 14I, 73I)	LH	16633711
	11-D9	15.100	PANEL, QTR TR (FRT) (GRAY)	93-96	F (14I)	LH	16671259
4.	11-A23	14.645	RETAINER, QTR UPR T/PNL (PUSH-IN, SLIDE-ON BUTN TYPE)	93-02	F	8	10142598
5.	11-A23	14.645	RETAINER, QTR UPR T/PNL (BLUE) (CHRISTMAS TREE TYPE) (15.222)	93-02	F	2	20640378
6.		8.958	TAPE, DUAL LK FSTN (44.5MM X 44.5MM - 5 PER PKG) (QTR TR FIN PNL FSTN) (2.483)	93-02		10	12520053
7.		N.S.	BEZEL, R/SEAT SHLDR BELT OPG				
8.	11-D9	15.100	RETAINER, QTR INR RR TR FIN PNL (CHRISTMAS TREE TYPE)	93	F87 (UQ0, U82)	AR	10193261
	11-D9	15.100	RETAINER, QTR INR RR TR FIN PNL (GRAPHITE)	93-96	F87 (12I, 14I, 73I)	3	16673676
	11-D9	15.100	RETAINER, QTR INR RR TR FIN PNL (CHRISTMAS TREE TYPE)	94-96	F87	3	10193261
	11-D9	15.100	RETAINER, QTR INR RR TR FIN PNL (NEUTRAL)	96	F87 (UQ0, U62, U65, 52I)	3	16673679
	11-D9	15.100	RETAINER, QTR INR RR TR FIN PNL (CHRISTMAS TREE TYPE)	97-02	F	3	10193261
	11-D9	15.100	RETAINER, QTR INR RR TR FIN PNL (GRAY)	97	F87 (UQ0, UZ7, 10I, 14I, 73I, 92I)	3	16633386
	11-D9	15.100	RETAINER, QTR INR RR TR FIN PNL (NEUTRAL)	97-99	F87 (UQ0, UZ7, 52I)	3	16673679
	11-D9	15.100	RETAINER, QTR INR RR TR FIN PNL (GRAY)	98-99	F87 (UQ0, UZ7, 10I, 14I, 73I)	3	16633386
	11-D9	15.100	RETAINER, QTR INR RR TR FIN PNL (NEUTRAL)	00-01	F87 (UQ0, 52I)	3	16673679
	11-D9	15.100	RETAINER, QTR INR RR TR FIN PNL (CHRISTMAS TREE TYPE)	01-02	F87 (UQ0)	3	10193261
	11-D9	15.100	RETAINER, QTR INR RR TR FIN PNL (QTR TURN) (BEIGE)	93-95	F87 (64I)	3	16673677
	11-D9	15.100	RETAINER, QTR INR RR TR FIN PNL (QTR TURN) (GRAY)	93-95	F87 (14I)	3	16673678
9.	11-D9	15.100	WASHER, QTR T/PNL	93-96	F87	3	16662200
	11-D9	15.100	WASHER, QTR T/PNL	99-02	F87 (UZ7)	3	16662200
10.	11-D9	15.100	BUMPER, QTR INR TR FIN PNL	93-02	F87	2	16662198
11.	11-D9	15.100	PANEL, QTR INR TR FIN (RR) (GRAY)	93-94	F (U82, 14I)	LH	16671335

cardiagn.com

11-D9	15.100	PANEL, QTR INR TR FIN (RR) (GRAY)	95-96	F (U65, U82, 14I)	LH	16671335
11-D9	15.100	PANEL, QTR INR TR FIN (RR) (NEUTRAL)	96	F87 (UQ0, U62, 52I)	LH	16672105
11-D9	15.100	PANEL, QTR INR TR FIN (RR) (NEUTRAL)	96	F87 (U65, 52I)	LH	16675642
11-D9	15.100	PANEL, QTR INR TR FIN (RR) (GRAY)	97	F87 (UQ0, 10I, 14I, 73I, 92I)	LH	16633452
11-D9	15.100	PANEL, QTR INR TR FIN (RR) (GRAY)	97	F87 (UZ7, 10I, 14I, 73I, 92I)	LH	16633453
11-D9	15.100	PANEL, QTR INR TR FIN (RR) (NEUTRAL)	97-99	F87 (UQ0, 52I)	LH	16672105
11-D9	15.100	PANEL, QTR INR TR FIN (RR) (NEUTRAL)	97-99	F87 (UZ7, 52I)	LH	16675644
11-D9	15.100	PANEL, QTR INR TR FIN (RR) (GRAY)	98-99	F87 (UQ0, 10I, 14I, 73I)	LH	16633452
11-D9	15.100	PANEL, QTR INR TR FIN (RR) (GRAY)	98-99	F87 (UZ7, 10I, 14I, 73I)	LH	16633453
11-D9	15.100	PANEL, QTR INR TR FIN (W/O SPKR HOLE) (RR) (GRAPHITE) (PAINT TO MATCH ALL OTHER COLORS)	93	F87 (UQ0, 12I)	LH	16671325
11-D9	15.100	PANEL, QTR INR TR FIN (W/O SPKR HOLE) (RR) (GRAPHITE) (PAINT TO MATCH ALL OTHER COLORS)	94-95	F87 (UQ0, U62, 12I, 73I)	LH	16671325
11-D9	15.100	PANEL, QTR INR TR FIN (W/O SPKR HOLE) (RR) (GRAPHITE) (PAINT TO MATCH ALL OTHER COLORS)	96	F87 (UQ0, U62, 12I, 14I, 73I)	LH	16671325
11-D9	15.100	PANEL, QTR INR TR FIN (W/SPKR HOLE) (RR) (GRAPHITE) (PAINT TO MATCH ALL OTHER COLORS)	93	F87 (U82, 12I)	LH	16671333
11-D9	15.100	PANEL, QTR INR TR FIN (W/SPKR HOLE) (RR) (GRAPHITE) (PAINT TO MATCH ALL OTHER COLORS)	94	F87 (U82, 12I, 73I)	LH	16671333
11-D9	15.100	PANEL, QTR INR TR FIN (W/SPKR HOLE) (RR) (GRAPHITE) (PAINT TO MATCH ALL OTHER COLORS)	95	F87 (U65, 12I, 73I)	LH	16671333
11-D9	15.100	PANEL, QTR INR TR FIN (W/SPKR HOLE) (RR) (GRAPHITE) (PAINT TO MATCH ALL OTHER COLORS)	96	F87 (U65, 12I, 14I, 73I)	LH	16671333
11-D9	15.100	PANEL, QTR INR RR TR FIN	00	F87 (UQ0, 19I, 73I, 92I)	LH	10410096
11-D9	15.100	PANEL, QTR INR RR TR FIN (NEUTRAL)	00	F87 (UZ7, 52I)	LH	10421973
11-D9	15.100	PANEL, QTR INR RR TR FIN (NEUTRAL)	01-02	F87 (UZ7, 52I)	LH	10308658
11-D9	15.100	PANEL, QTR INR RR TR FIN	01-02	F87 (UQ0, 52I)	LH	10308664
11-D9	15.100	PANEL, QTR INR RR TR FIN (EBONY)	01	F87 (UQ0, 19I, 73I, 92I)	LH	10308669
11-D9	15.100	PANEL, QTR INR RR TR FIN (EBONY)	00-01	FP87 (UZ7, 19I, 73I, 92I)	LH	10308660
11-D9	15.100	PANEL, QTR INR RR TR FIN (EBONY)	02	F87 (UQ0, 19I, 92I)	LH	10308669

cardiagn.com

	11-D9	15.100	PANEL, QTR INR RR TR FIN (EBONY)	02	FP87 (UZ7, 19I, 92I)	LH	10308660
12.	11-N22	12.190	PANEL, R/CMPT L/WDO CLOSEOUT (BEIGE)	93-95	F87	1	10255324
	11-N22	12.190	PANEL, R/CMPT L/WDO CLOSEOUT (GRAY)	93-96	F87	1	10255325
	11-N22	12.190	PANEL, R/CMPT L/WDO CLOSEOUT (GRAPHITE)	94-96	F87	1	10255323
	11-N22	12.190	PANEL, R/CMPT L/WDO CLOSEOUT (NEUTRAL)	96-00	F87	1	10299076
	11-N22	12.190	PANEL, R/CMPT L/WDO CLOSEOUT (GRAY)	97-99	F87	1	10299077
	11-N22	12.190	PANEL, R/CMPT L/WDO CLOSEOUT (PEWTER)	00-02	F87	1	10308668
	11-N22	12.190	PANEL, R/CMPT L/WDO CLOSEOUT (EBONY)	00	F87	1	10410785
	11-N22	12.190	PANEL, R/CMPT L/WDO CLOSEOUT (NEUTRAL)	01-02	F87	1	10308666
	11-N22	12.190	PANEL, R/CMPT L/WDO CLOSEOUT (EBONY)	01-02	F87	1	10308667
13.	11-D9	15.100	PANEL, QTR INR TR FIN (GRAPHITE) (PAINT TO MATCH ALL OTHER COLORS)	93	F87 (UQ0, U82, 12I)	RH	16661064
	11-D9	15.100	PANEL, QTR INR TR FIN (GRAY)	93	F87 (UQ0, U82, 14I)	RH	16661068
	11-D9	15.100	PANEL, QTR INR TR FIN (GRAPHITE) (PAINT TO MATCH ALL OTHER COLORS)	94	F87 (UQ0, U62, U82, 12I, 73I)	RH	16661064
	11-D9	15.100	PANEL, QTR INR TR FIN (GRAY)	94	F87 (UQ0, U62, U82, 14I)	RH	16661068
	11-D9	15.100	PANEL, QTR INR TR FIN (GRAPHITE) (PAINT TO MATCH ALL OTHER COLORS)	95	F87 (UQ0, U62, U65, 12I 73I)	RH	16661064
	11-D9	15.100	PANEL, QTR INR TR FIN (GRAY)	95	F87 (UQ0, U62, U65, 14I)	RH	16661068
	11-D9	15.100	PANEL, QTR INR TR FIN (GRAPHITE) (PAINT TO MATCH ALL OTHER COLORS)	96	F87 (UQ0, U62, U65, 12I, 14I, 73I)	RH	16661064
	11-D9	15.100	PANEL, QTR INR TR FIN (NEUTRAL)	96	F87 (UQ0, U62, U65, 52I)	RH	16672102
	11-D9	15.100	PANEL, QTR INR TR FIN (GRAY)	97-99	F87 (UZ7, 10I, 14I, 73I)	RH	16633448
	11-D9	15.100	PANEL, QTR INR TR FIN (GRAY)	97-99	F87 (UQ0, 10I, 14I, 73I)	RH	16633450
	11-D9	15.100	PANEL, QTR INR TR FIN (NEUTRAL)	97-00	F87 (UQ0, 52I)	RH	16672102
	11-D9	15.100	PANEL, QTR INR TR FIN (NEUTRAL)	97-99	F87 (UZ7, 52I)	RH	16675643
	11-D9	15.100	PANEL, QTR INR TR FIN	01-02	F87 (UQ0, 52I)	RH	10308663
	11-D9	15.100	PANEL, QTR INR TR FIN (GRAPHITE) (PAINT TO MATCH ALL OTHER COLORS)	93	F87 (UQ0, U82, 12I)	RH	16661064
	11-D9	15.100	PANEL, QTR INR TR FIN (GRAY)	93	F87 (UQ0, U82, 14I)	RH	16661068
	11-D9	15.100	PANEL, QTR INR TR FIN (GRAPHITE) (PAINT TO MATCH ALL OTHER COLORS)	94	F87 (UQ0, U62, U82, 12I, 73I)	RH	16661064
	11-D9	15.100	PANEL, QTR INR TR FIN (GRAY)	94	F87 (UQ0, U62, U82, 14I)	RH	16661068
	11-D9	15.100	PANEL, QTR INR TR FIN (GRAPHITE) (PAINT TO MATCH ALL OTHER COLORS)	95	F87 (UQ0, U62, U65, 12I, 73I)	RH	16661064

cardiagn.com

							1F14-020
	11-D9	15.100	PANEL, QTR INR TR FIN (GRAY) .	95	F87 (UQ0, U62, U65, 14I)	RH	16661068
	11-D9	15.100	PANEL, QTR INR TR FIN (GRAPHITE) (PAINT TO MATCH ALL OTHER COLORS)	96	F87 (UQ0, U62, U65, 12I, 14I, 73I)	RH	16661064
	11-D9	15.100	PANEL, QTR INR TR FIN (NEUTRAL)	96	F87 (UQ0, U62, U65 52I)	RH	16672102
	11-D9	15.100	PANEL, QTR INR TR FIN (GRAY) .	97-99	F87 (UZ7, 10I, 14I, 73I) .	RH	16633446
	11-D9	15.100	PANEL, QTR INR TR FIN (GRAY) .	97-99	F87 (UQ0, 10I, 14I, 73I)	RH	16633450
	11-D9	15.100	PANEL, QTR INR TR FIN (NEUTRAL)	97-00	F87 (UQ0, 52I)	RH	16672102
	11-D9	15.100	PANEL, QTR INR TR FIN (NEUTRAL)	97-99	F87 (UZ7, 52I)	RH	16675643
	11-D9	15.100	PANEL, QTR INR TR FIN	01-02	F87 (UQ0, 52I)	RH	10308663
14.	11-D9	15.100	RETAINER, QTR INR RR TR FIN PNL (CHRISTMAS TREE TYPE) ..	93-97	F87 (UQ0, U82)	3	10193261
	11-D9	15.100	RETAINER, QTR INR RR TR FIN PNL (CHRISTMAS TREE TYPE) ..	98-02	F87 (UQ0)	3	10193261
15.	11-N5	9.665	GRILLE, RDO QTR SPKR (GRAPHITE)	98-02	F	2	10270173
	11-N5	9.665	GRILLE, RDO QTR SPKR (GRAPHITE)	00-02	F87 (W53)	2	10270173
	11-N5	9.665	GRILLE, RDO QTR SPKR (PNL ON LH SIDE ONLY) (GRAPHITE) .	93-94	F87 (U82)	1	16658157
	11-N5	9.665	GRILLE, RDO QTR SPKR (PNL ON LH SIDE ONLY) (GRAPHITE) .	95-96	F87 (U65)	1	16658157
	11-N5	9.665	GRILLE, RDO QTR SPKR (RR QTR BEHIND ST) (GRAPHITE) ...	97	F87 (UZ7)	2	16658642
	11-N5	9.665	GRILLE, RDO QTR SPKR (RR QTR NEXT TO RR ST)	93-02	F87	RH	16671270
	11-N5	9.665	GRILLE, RDO QTR SPKR (RR QTR NEXT TO RR ST)	03-02	F87	LH	16671271
16.	11-N5	9.665	GRILLE, RDO QTR SPKR (GRAPHITE)	98-02	F	2	10270173
	11-N5	9.665	GRILLE, RDO QTR SPKR (GRAPHITE)	00-02	F87 (W53)	2	10270173
	11-N5	9.665	GRILLE, RDO QTR SPKR (PNL ON LH SIDE ONLY) (GRAPHITE) .	93-94	F87 (U82)	1	16658157
	11-N5	9.665	GRILLE, RDO QTR SPKR (PNL ON LH SIDE ONLY) (GRAPHITE) .	95-96	F87 (U65)	1	16658157
	11-N5	9.665	GRILLE, RDO QTR SPKR (RR QTR BEHIND ST) (GRAPHITE) ...	97	F87 (UZ7)	2	16658642
	11-N5	9.665	GRILLE, RDO QTR SPKR (RR QTR NEXT TO RR ST)	93-02	F87	RH	16671270
	11-N5	9.665	GRILLE, RDO QTR SPKR (RR QTR NEXT TO RR ST)	93-02	F87	LH	16671271
17.	11-D16	15.388	HOOK, COAT (GRAPHITE)	93	F87 (12I)	2	10159119
	11-D16	15.388	HOOK, COAT (BEIGE)	93-95	F87 (64I)	2	10159120
	11-D16	15.388	HOOK, COAT (GRAY)	93-95	F87 (14I)	2	10159121
	11-D16	15.388	HOOK, COAT (GRAPHITE)	94-95	F87 (12I, 73I)	2	10159119
	11-D16	15.388	HOOK, COAT (GRAPHITE)	96	F87 (12I, 14I, 73I)	2	10159119
	11-D16	15.388	HOOK, COAT (NEUTRAL)	96-02	F87 (52I)	2	10260011
	11-D16	15.388	HOOK, COAT (GRAY)	97-98	F87 (10I, 14I, 73I, 92I) ..	2	10272150
	11-D16	15.388	HOOK, COAT (GRAY)	99	F87 (10I, 14I, 73I)	2	10272150
	11-D16	15.388	HOOK, COAT (EBONY)	00-01	F87 (19I, 73I, 92I)	2	10409792
	11-D16	15.388	HOOK, COAT (EBONY)	02	F87 (19I, 92I)	2	10409792
18.	11-D9	15.100	EXTENSION, QTR INR TR FIN PNL (GRAY)	97-99	F87 (CC1)	RH	10272222

cardiagn.com

							1F14–020
	11–D9	15.100	**EXTENSION**, QTR INR TR FIN PNL (GRAY)	97–99	F87 (CC1)	LH	10272223
	11–D9	15.100	**EXTENSION**, QTR INR TR FIN PNL	00–02	F87 (CC1)	RH	10410094
	11–D9	15.100	**EXTENSION**, QTR INR TR FIN PNL	00–02	F87 (CC1)	LH	10410095
	11–D9	15.100	**EXTENSION**, QTR INR TR FIN PNL (ATCH TO RR T–TOP STKR) (GRAPHITE)	93–97	F87 (CC1)	RH	10181776
	11–D9	15.100	**EXTENSION**, QTR INR TR FIN PNL (ATCH TO RR T–TOP STKR) (GRAPHITE)	93–97	F87 (CC1)	LH	10181777
19.		9.977	**SCREW**, OVAL CSK TRIM HD W/WA TYPE AB (4.2X1.4X20) (QTR TR FIN PNL) (16.682)	93–02		4	12338093
20.	11–N22	12.190	**CLIP**, R/CMPT L/WDO SI TR FIN PNL CVR (BLACK) (14.731)	93–02	F87	6	20550150
21.	11–N22	12.190	**MOLDING**, R/CMPT L/WDO SI FIN (GRAY)	93–96	F (14I)	LH	16670361
	11–N22	12.190	**MOLDING**, R/CMPT L/WDO SI FIN (GRAPHITE)	93–96	F87 (12I)	LH	16670357
	11–N22	12.190	**MOLDING**, R/CMPT L/WDO SI FIN (GRAPHITE)	93–95	F87 (64I)	LH	16670357
	11–N22	12.190	**MOLDING**, R/CMPT L/WDO SI FIN (NEUTRAL)	96	F (52I)	LH	16672107
	11–N22	12.190	**MOLDING**, R/CMPT L/WDO SI FIN (GRAY)	97	F87 (10I, 14I, 73I, 92I)	LH	16633463
	11–N22	12.190	**MOLDING**, R/CMPT L/WDO SI FIN (NEUTRAL)	97–02	F87 (52I)	LH	16672107
	11–N22	12.190	**MOLDING**, R/CMPT L/WDO SI FIN (GRAY)	98–99	F87 (10I, 14I, 73I)	LH	16633463
22.	11–N22	12.190	**RETAINER**, R/CMPT L/WDO SI FIN MLDG (CHRISTMAS TREE TYPE) (15.100)	93–02	F	6	10193261
23.	11–N22	12.190	**RETAINER**, R/CMPT L/WDO SI FIN MLDG (CHRISTMAS TREE TYPE) (15.100)	93–02	F	6	10193261

RPO DEFINITIONS

CC1 – ROOF,HATCH,REMOVABLE PANELS,GLASS
UQ0 – SPEAKER SYSTEM,4,DUAL FRONT DOOR MOUNTED,DUAL STANDARD RANGE PACKAGE SHELF/QUARTER
UZ7 – SPEAKER SYSTEM 8, QUAD FRT DR MTD, DUAL SAIL PNL, DUAL RR HATCH, AMPLIFIER
U62 – SPEAKER SYSTEM,4,DUAL COAX FRONT,DUAL COAX PACKAGE SHELF
U65 – SPEAKER SYSTEM,5,DUAL FRT DR MTD,DUAL EXT RANGE SAIL PANEL,SINGLE RR COMPARTMENT
U82 – SPEAKER SYSTEM 3, DUAL DR MTD, RR PKG SHELF
W53 – ENTERTAINMENT SYSTEM OPYION C
10I – INTERIOR TRIM – ARCTIC WHITE
12I – INTERIOR TRIM GRAPHITE
14I – INTERIOR TRIM LT GRAY
19I – INTERIOR TRIM,BLACK
52I – INTERIOR TRIM LIGHT NEUTRAL
64I – INTERIOR TRIM,LIGHT BEIGE
73I – INTERIOR TRIM,FLAME RED
92I – INTERIOR TRIM SHALE/PEWTER

cardiagn.com

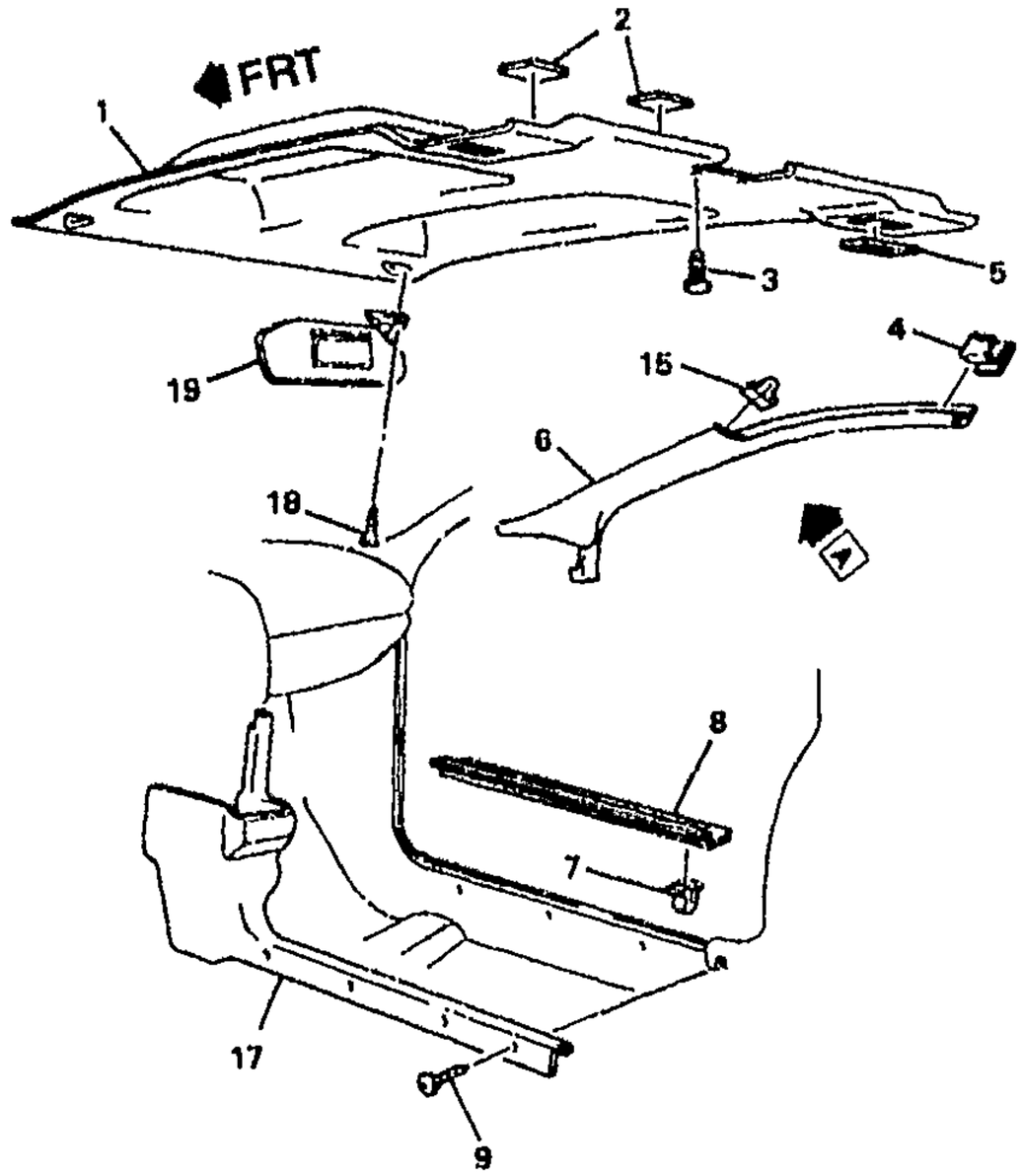

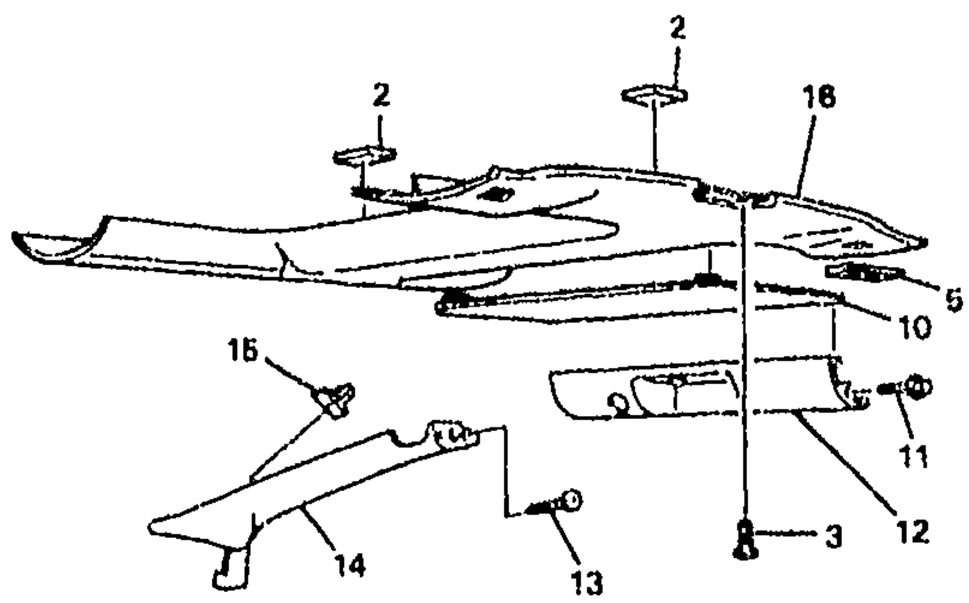

(CC1)
VIEW A

1F14-024

1993-2002 F87 TRIM/INTERIOR FRONT

1.	11-A22	14.640	PANEL, HDLNG TR (GRAPHITE) .	93	F87 (12I) (EXC CC1) . . .	1	10279501
	11-A22	14.640	PANEL, HDLNG TR (BEIGE)	93-95	F87 (64I) (EXC CC1) . . .	1	10279502
	11-A22	14.640	PANEL, HDLNG TR	93-95	F87 (14I) (EXC CC1) . . .	1	10279503
	11-A22	14.640	PANEL, HDLNG TR (GRAPHITE) .	94-96	F87 (12I, 73I) (EXC CC1)	1	10279501
	11-A22	14.640	PANEL, HDLNG TR (NEUTRAL) . .	96-02	F87 (52I) (EXC CC1) . . .	1	10279504
	11-A22	14.640	PANEL, HDLNG TR (GRAPHITE) .	96	FP87 (12I, 14I, 73I) (EXC CC1)	1	10279501

cardiagn.com

	11-A22	14.640	**PANEL**, HDLNG TR (GRAY)	97-99	F87 (10I, 14I, 73I) (EXC CC1)	1	10277772
	11-A22	14.640	**PANEL**, HDLNG TR (PEWTER) ..	97	F87 (92I) (EXC CC1) ...	1	10284311
	11-A22	14.640	**PANEL**, HDLNG TR (PEWTER) ..	00-02	F87 (92I) (EXC CC1) ...	1	10284311
	11-A22	14.640	**PANEL**, HDLNG TR (EBONY)	00-01	F87 (19I, 73I) (EXC CC1)	1	10410049
	11-A22	14.640	**PANEL**, HDLNG TR (EBONY)	02	F87 (19I) (EXC CC1) ...	1	10410049
2.		8.958	**TAPE**, DUAL LK FSTN (44.5MM X 44.5MM – 5 PER PKG) (HDLNG TR FIN PNL) (2.483)	93-02	.....	2	12520053
3.		8.950	**RETAINER**, FITS .250 HOLE, 1.01LG.700-OD NYLON BLACK (HDLNG TR FIN PNL)	93-96	F (EXC CC1)	1	10121502
	11-A22	14.640	**RETAINER**, HDLNG T/PNL (5.8MM OD X 26.9MM LG) (FOR 6.25MM HOLE) (8.950)	93-96	F87 (EXC CC1)	1	10121502
	11-A22	14.640	**RETAINER**, HDLNG T/PNL (GRAY)	94-95	F87 (CC1, 14I)	1	10241518
	11-A22	14.640	**RETAINER**, HDLNG T/PNL (BEIGE)	94-95	F87 (CC1, 64I)	1	10241519
	11-A22	14.640	**RETAINER**, HDLNG T/PNL (GRAY)	94-95	F87 (CC1, 12I, 73I)	1	10242316
	11-A22	14.640	**RETAINER**, HDLNG T/PNL (GRAY)	96	F87 (CC1, 12I, 14I, 73I)	1	10242316
	11-A22	14.640	**RETAINER**, HDLNG T/PNL (NEUTRAL)	96-02	F87 (CC1, 52I)	1	10249241
	11-A22	14.640	**RETAINER**, HDLNG T/PNL (GRAY)	97-99	F87 (CC1, 10I, 14I, 73I)	1	10278954
	11-A22	14.640	**RETAINER**, HDLNG T/PNL (PEWTER)	97	F87 (CC1, 92I)	1	10279623
	11-A22	14.640	**RETAINER**, HDLNG T/PNL (PEWTER)	00-02	F87 (CC1, 92I)	1	10279623
	11-A22	14.640	**RETAINER**, HDLNG T/PNL (EBONY)	00	F87 (CC1, 19I)	1	10410052
	11-A22	14.640	**RETAINER**, HDLNG T/PNL (EBONY)	01	F87 (CC1, 19I, 73I)	1	10410052
	11-A22	14.640	**RETAINER**, HDLNG T/PNL (EBONY)	02	F87 (CC1, 19I)	1	10410052
4.	11-N6	10.056	**CLIP**, W/S SI UPR G/MLDG (PART OF 6) (0.63 SPRING STEEL)	93-02	F	2	16662182
	11-N6	10.056	**CLIP**, W/S SI UPR G/MLDG (PART OF 6) (METAL, S-SHAPED) (15.100)	93-02	F (EXC CC1)	2	20477070
5.		N.S.	**ESCUTCHEON**, HDLNG TR FIN PNL F/SEAT BELT OPG		.....		
6.	11-N6	10.051	**MOLDING**, W/S SI UPR GARN (INCLS 4, 15)	93-96	F87 (EXC CC1)	RH	10246734
	11-N6	10.051	**MOLDING**, W/S SI UPR GARN (INCLS 4, 15)	93-96	F87 (EXC CC1)	LH	10246735
	11-N6	10.051	**MOLDING**, W/S SI UPR GARN (INCLS 4, 15) (GRAPHITE)	97-99	F87 (EXC CC1)	RH	10408109
	11-N6	10.051	**MOLDING**, W/S SI UPR GARN (INCLS 4, 15)	97-99	F87 (EXC CC1)	LH	10408110
	11-N6	10.051	**MOLDING**, W/S SI UPR GARN (INCLS 4, 15)	00-02	F87 (EXC CC1)	RH	10410020
	11-N6	10.051	**MOLDING**, W/S SI UPR GARN (INCLS 4, 15)	00-02	F87 (EXC CC1)	LH	10410021

cardiagn.com

7.	11-N13	11.175	CLIP, FRT S/D SILL TR PLT (PART OF 8) (0.63 SPRING STEEL) (10.056)	93-02	F	4	16662182
	11-N13	11.175	CLIP, FRT S/D SILL TR PLT (PART OF 8) (0.63 SPRING STEEL) (10.056)	02	F (EXC CC1)	4	16662182
8.	11-N13	11.175	PLATE, FRT S/D SILL TR (INCLS 7) (BLACK)	93-02	F	2	10159122
9.		N.S.	BOLT, BODY H/PLR TR				
10.	11-N23	12.810	SUNSHADE, RF LIFT OFF WDO (GRAPHITE) (INSTL W/O DUAL LK ATCHD TO T-TOP GLS, USE W/12520053)	93-95	F87 (CC1, DE4, 12I, 73I)	RH	10280591
	11-N23	12.810	SUNSHADE, RF LIFT OFF WDO (GRAPHITE) (INSTL W/O DUAL LK ATCHD TO T-TOP GLS, USE W/12520053)	93-95	F87 (CC1, DE4, 12I, 73I)	LH	10280592
	11-N23	12.810	SUNSHADE, RF LIFT OFF WDO (BEIGE) (INSTL W/O DUAL LK ATCHD TO T-TOP GLS, USE W/12520053)	93-95	F87 (CC1, DE4, 64I)	RH	10280593
	11-N23	12.810	SUNSHADE, RF LIFT OFF WDO (BEIGE) (INSTL W/O DUAL LK ATCHD TO T-TOP GLS, USE W/12520053)	93-95	F87 (CC1, DE4, 64I)	LH	10280594
	11-N23	12.810	SUNSHADE, RF LIFT OFF WDO (GRAY) (INSTL W/O DUAL LK ATCHD TO T-TOP GLS, USE W/12520053)	93-95	F87 (CC1, DE4, 14I)	RH	10280595
	11-N23	12.810	SUNSHADE, RF LIFT OFF WDO (GRAY) (INSTL W/O DUAL LK ATCHD TO T-TOP GLS, USE W/12520053)	93-95	F87 (CC1, DE4, 14I)	LH	10280596
	11-N23	12.810	SUNSHADE, RF LIFT OFF WDO (GRAPHITE)	96	F87 (CC1, DE4, 12I, 14I, 73I)	RH	10280591
	11-N23	12.810	SUNSHADE, RF LIFT OFF WDO (GRAPHITE)	96	F87 (CC1, DE4, 12I, 14I, 73I)	LH	10280592
	11-N23	12.810	SUNSHADE, RF LIFT OFF WDO (NEUTRAL)	96-02	F87 (CC1, DE4, 52I)	RH	10280597
	11-N23	12.810	SUNSHADE, RF LIFT OFF WDO (NEUTRAL)	96-02	F87 (CC1, DE4, 52I)	LH	10280598
	11-N23	12.810	SUNSHADE, RF LIFT OFF WDO (GRAY)	97-99	F87 (CC1, DE4, 10I, 14I, 73I)	RH	10278956
	11-N23	12.810	SUNSHADE, RF LIFT OFF WDO (GRAY)	97-99	F87 (CC1, DE4, 10I, 14I, 73I)	LH	10278957
	11-N23	12.810	SUNSHADE, RF LIFT OFF WDO (PEWTER)	97	F87 (CC1, DE4, 92I)	RH	10284292
	11-N23	12.810	SUNSHADE, RF LIFT OFF WDO (PEWTER)	97	F87 (CC1, DE4, 92I)	LH	10284293
	11-N23	12.810	SUNSHADE, RF LIFT OFF WDO (PEWTER)	00-02	F87 (CC1, DE4, 92I)	RH	10284292
	11-N23	12.810	SUNSHADE, RF LIFT OFF WDO (PEWTER)	00-02	F87 (CC1, DE4, 92I)	LH	10284293
11.	11-N25	12.811	BOLT, RF LIFT OFF PNL/WDO LAT TR CVR (M4.8X1.59X13 NKEL) (12.810)	93-02	F87 (CC1)	4	20356151
12.	11-N25	12.811	COVER, RF LIFT OFF PNL/WDO LAT TR	93-99	F87 (CC1)	RH	10246779

cardiagn.com

	11-N25	12.811	COVER, RF LIFT OFF PNL/WDO LAT TR	93-99	F87 (CC1)	LH	10246780
	11-N25	12.811	COVER, RF LIFT OFF PNL/WDO LAT TR	00-02	F87 (CC1)	RH	10436823
	11-N25	12.811	COVER, RF LIFT OFF PNL/WDO LAT TR	00-02	F87 (CC1)	LH	10436824
13.		8.977	SCREW, OVAL CSK TRIM HD W/WA TYPE AB (4.2X1.4X20) (W/S G/MLDG) (16.682)	93-02		4	12338093
14.	11-N6	10.051	MOLDING, W/S SI UPR GARN (INCLS 15)	93-96	F (CC1)	LH	10246731
	11-N6	10.051	MOLDING, W/S SI UPR GARN (INCLS 15)	93-96	F87 (CC1)	RH	10246730
	11-N6	10.051	MOLDING, W/S SI UPR GARN (INCLS 15)	97-99	F87 (CC1)	LH	10246737
	11-N6	10.051	MOLDING, W/S SI UPR GARN (INCLS 15) (GRAPHITE)	97-99	F87 (CC1)	RH	10408111
	11-N6	10.051	MOLDING, W/S SI UPR GARN (INCLS 15) (GRAPHITE)	97-99	F87 (CC1)	LH	10408112
	11-N6	10.051	MOLDING, W/S SI UPR GARN (INCLS 15)	00-02	F87 (CC1)	RH	10410022
	11-N6	10.051	MOLDING, W/S SI UPR GARN (INCLS 15)	00-02	F87 (CC1)	LH	10410023
15.	11-N6	10.056	CLIP, W/S SI UPR G/MLDG (PART OF 6, 14) (0.63 SPRING STEEL)	93-02	F	2	16662182
16.	11-A22	14.640	PANEL, HDLNG TR (NEUTRAL)	96-97	F87 (CC1, 52I)	1	10279509
	11-A22	14.640	PANEL, HDLNG TR (GRAY)	97	F87 (CC1, 10I, 14I, 73I)	1	10277781
	11-A22	14.640	PANEL, HDLNG TR (PEWTER)	97	F87 (CC1, 92I)	1	10284310
	11-A22	14.640	PANEL KIT, HDLNG TR (GRAPHITE) (MAY REQ CTR HOLE RET 10242316)	93	F87 (CC1, 12I)	1	12525672
	11-A22	14.640	PANEL KIT, HDLNG TR (BEIGE) (MAY REQ CTR HOLE RET 10229433)	93-95	F87 (CC1, 64I)	1	12525673
	11-A22	14.640	PANEL KIT, HDLNG TR (GRAY) (MAY REQ CTR HOLE RET 10241518)	93-95	F87 (CC1, 14I)	1	12525674
	11-A22	14.640	PANEL KIT, HDLNG TR (GRAPHITE) (MAY REQ CTR HOLE RET 10242316)	94-95	F87 (CC1, 12I, 73I)	1	12525672
	11-A22	14.640	PANEL KIT, HDLNG TR (GRAPHITE)	96	F87 (CC1, 12I, 14I, 73I)	1	12525672
		N.S.	PANEL, HDLNG TR	93-95			
	11-A22	14.640	PANEL, HDLNG TR (NEUTRAL)	00-02	F87 (52I) (EXC CC1)	1	10279504
	11-A22	14.640	PANEL, HDLNG TR (NEUTRAL)	00-02	F87 (CC1, 52I)	1	10279509
	11-A22	14.640	PANEL, HDLNG TR (PEWTER)	00-02	F87 (CC1, 92I)	1	10284310
	11-A22	14.640	PANEL, HDLNG TR (PEWTER)	00-02	F87 (92I) (EXC CC1)	1	10284311
	11-A22	14.640	PANEL, HDLNG TR (EBONY)	00-01	F87 (19I, 73I) (EXC CC1)	1	10410049
	11-A22	14.640	PANEL, HDLNG TR	00-01	F87 (CC1, 19I, 73I)	1	10410050
	11-A22	14.640	PANEL, HDLNG TR (EBONY)	02	F87 (19I) (EXC CC1)	1	10410049
	11-A22	14.640	PANEL, HDLNG TR	02	F87 (CC1, 19I)	1	10410050
17.	11-A21	14.630	PANEL, BODY H/PLR TR (BEIGE)	93-95	F (64I)	LH	10226286
	11-A21	14.630	PANEL, BODY H/PLR TR (GRAY)	93-95	F (14I)	LH	10226290
	11-A21	14.630	PANEL, BODY H/PLR TR (BEIGE)	93-95	F (64I)	RH	10247458
	11-A21	14.630	PANEL, BODY H/PLR TR (GRAPHITE)	93	F (12I)	RH	10247459

cardiagn.com

	11–A21	14.630	PANEL, BODY H/PLR TR (GRAY)	93	F (14I)	RH	10247460
	11–A21	14.630	PANEL, BODY H/PLR TR (GRAPHITE)	93	F (12I)	LH	10284842
	11–A21	14.630	PANEL, BODY H/PLR TR (GRAPHITE)	94–95	F (12I, 73I)	LH	10284842
	11–A21	14.630	PANEL, BODY H/PLR TR (GRAPHITE)	94–95	F87 (12I, 73I)	RH	10247459
	11–A21	14.630	PANEL, BODY H/PLR TR (GRAY)	94	F87 (14I)	RH	10247460
	11–A21	14.630	PANEL, BODY H/PLR TR (GRAY)	95	F (14I)	RH	10247460
	11–A21	14.630	PANEL, BODY H/PLR TR (GRAPHITE)	96	F (12I, 14I, 73I)	RH	10247459
	11–A21	14.630	PANEL, BODY H/PLR TR (GRAPHITE)	96	F (12I, 14I, 73I)	LH	10284842
	11–A21	14.630	PANEL, BODY H/PLR TR (NEUTRAL)	96–02	F (52I)	LH	10285356
	11–A21	14.630	PANEL, BODY H/PLR TR	96–02	F (52I)	RH	10308653
	11–A21	14.630	PANEL, BODY H/PLR TR (GRAY)	97	F (10I, 14I, 73I, 92I)	RH	10272178
	11–A21	14.630	PANEL, BODY H/PLR TR (GRAY)	97	F (10I, 14I, 73I, 92I)	LH	10284845
	11–A21	14.630	PANEL, BODY H/PLR TR (GRAY)	98–99	F (10I, 14I, 73I)	RH	10272178
	11–A21	14.630	PANEL, BODY H/PLR TR (GRAY)	98–99	F (10I, 14I, 73I)	LH	10284845
	11–A21	14.630	PANEL, BODY H/PLR TR (EBONY)	00–01	F (19I, 73I, 92I)	RH	10409936
	11–A21	14.630	PANEL, BODY H/PLR TR (EBONY)	00–01	F (19I, 73I, 92I)	LH	10409937
	11–A21	14.630	PANEL, BODY H/PLR TR (EBONY)	02	F (19I, 92I)	RH	10409936
	11–A21	14.630	PANEL, BODY H/PLR TR (EBONY)	02	F (19I, 92I)	LH	10409937
18.		8.977	SCREW, OVAL CSK TRIM HD W/WA TYPE AB (4.2X1.4X20) (SUNSHADE) (16.682)	93–02		6	12338093
19.	11–N7	10.203	SUNSHADE, (GRAPHITE)	93	F (12I)	RH	12453671
	11–N7	10.203	SUNSHADE, (GRAPHITE)	93	F (12I)	LH	12453672
		DISCON	SUNSHADE, (BEIGE)	93	F (64I)	RH	12453673
	11–N7	10.203	SUNSHADE, (BEIGE)	93	F (64I)	LH	12453674
	11–N7	10.203	SUNSHADE, (GRAY)	93	F (14I)	LH	12453676
	11–N7	10.203	SUNSHADE, (GRAPHITE)	94–95	F87 (12I, 73I)	RH	12453679
	11–N7	10.203	SUNSHADE, (GRAPHITE)	94–95	F87 (12I, 73I)	LH	12453680
	11–N7	10.203	SUNSHADE, (BEIGE)	94–95	F87 (64I)	RH	12453681
	11–N7	10.203	SUNSHADE, (BEIGE)	94–95	F87 (64I)	LH	12453682
	11–N7	10.203	SUNSHADE, (GRAY)	94–95	F87 (14I)	RH	12453683
	11–N7	10.203	SUNSHADE, (GRAY)	94–95	F87 (14I)	LH	12453684
	11–N7	10.203	SUNSHADE, (NEUTRAL)	96–97	F87 (52I) (EXC Z49)	RH	10407222
	11–N7	10.203	SUNSHADE, (NEUTRAL)	96–97	F87 (52I) (EXC Z49)	LH	10407223
	11–N7	10.203	SUNSHADE, (NEUTRAL)	96–02	F87 (Z49, 52I)	RH	10409540
	11–N7	10.203	SUNSHADE, (NEUTRAL)	96–02	F87 (Z49, 52I)	LH	10409541
	11–N7	10.203	SUNSHADE, (GRAPHITE) (W/VAN MIRROR)	96	F87 (12I, 14I, 73I)	RH	12453685
	11–N7	10.203	SUNSHADE, (GRAPHITE)	96	F87 (12I, 14I, 73I)	LH	12453686
	11–N7	10.203	SUNSHADE, (GRAY)	97	F87 (10I, 14I, 73I) (EXC Z49)	RH	10407224
	11–N7	10.203	SUNSHADE, (GRAY)	97	F87 (10I, 14I, 73I) (EXC Z49)	LH	10407225
	11–N7	10.203	SUNSHADE, (PEWTER)	97	F87 (92I)	RH	10407226
	11–N7	10.203	SUNSHADE, (PEWTER)	97	F87 (92I)	LH	10407227
	11–N7	10.203	SUNSHADE, (NEUTRAL)	98–02	F87 (52I) (EXC D21, Z49)	RH	10407222

cardiagn.com

11-N7	10.203	SUNSHADE, (NEUTRAL)	98-02	F87 (52I) (EXC D21, Z49)	LH	10407223
11-N7	10.203	SUNSHADE, (GRAY)	98-99	F87 (10I, 14I, 73I) (EXC D21, Z49)	RH	10407224
11-N7	10.203	SUNSHADE, (GRAY)	98-99	F87 (10I, 14I, 73I) (EXC D21, Z49)	LH	10407225
11-N7	10.203	SUNSHADE, (GRAY)	98-99	F87 (Z49, 10I, 14I, 73I) .	RH	10409542
11-N7	10.203	SUNSHADE, (GRAY)	98-99	F87 (Z49, 10I, 14I, 73I) .	LH	10409543
11-N7	10.203	SUNSHADE, (PEWTER)	00-02	F87 (92I) (EXC D21, Z49)	RH	10407226
11-N7	10.203	SUNSHADE, (PEWTER)	00-02	F87 (92I) (EXC D21, Z49)	LH	10407227
11-N7	10.203	SUNSHADE, (EBONY)	00-02	F87 (19I, 73I) (EXC D21, Z49)	RH	10410035
11-N7	10.203	SUNSHADE, (EBONY)	00-02	F87 (19I, 73I) (EXC D21, Z49)	LH	10410036
11-N7	10.203	SUNSHADE, (EBONY)	00-02	F87 (Z49, 19I, 73I)	RH	10410037
11-N7	10.203	SUNSHADE, (EBONY)	00-02	F87 (Z49, 19I, 73I)	LH	10410038
11-N7	10.203	SUNSHADE, (PEWTER)	00-02	F87 (Z49, 92I)	RH	10416654
11-N7	10.203	SUNSHADE, (PEWTER)	00-02	F87 (Z49, 92I)	LH	10416655
11-N7	10.203	SUNSHADE, (EBONY)	01-02	F87 (D21, 19I, 73I, 92I) .	LH	10410034
11-N7	10.203	SUNSHADE, (NEUTRAL)	02	F87 (D21, 52I)	RH	10407207
11-N7	10.203	SUNSHADE, (NEUTRAL)	02	F87 (D21, 52I)	LH	10407208
11-N7	10.203	SUNSHADE, (EBONY)	02	F87 (D21, 19I, 73I, 92I) .	RH	10410033
11-N7	10.203	SUNSHADE, (NEUTRAL)	98-02	F87 (D21, 52I) (EXPORT)	RH	10407207
11-N7	10.203	SUNSHADE, (NEUTRAL)	98-02	F87 (D21, 52I) (EXPORT)	LH	10407208
11-N7	10.203	SUNSHADE, (GRAY)	98-99	F87 (D21, 10I, 14I, 73I) (EXPORT)	RH	10407209
11-N7	10.203	SUNSHADE, (GRAY)	98-99	F87 (D21, 10I, 14I, 73I) (EXPORT)	LH	10407210
11-N7	10.203	SUNSHADE, (EBONY)	00-02	F87 (D21, 19I, 73I, 92I) (EXPORT)	RH	10410033

RPO DEFINITIONS

CC1 -- ROOF,HATCH,REMOVABLE PANELS,GLASS
DE4 -- SUNSHADE,REMOVABLE HATCH ROOF
D21 -- SUNSHADE WINDSHIELD(EXPORT)
Z49 -- MANDATORY CANADIAN BASE EQUIPMENT MODIFICATIONS(CANADIAN)
10I -- INTERIOR TRIM-- ARCTIC WHITE
12I -- INTERIOR TRIM GRAPHITE
14I -- INTERIOR TRIM LT GRAY
19I -- INTERIOR TRIM,BLACK
52I -- INTERIOR TRIM LIGHT NEUTRAL
64I -- INTERIOR TRIM,LIGHT BEIGE
73I -- INTERIOR TRIM,FLAME RED
92I -- INTERIOR TRIM SHALE/PEWTER

cardiagn.com

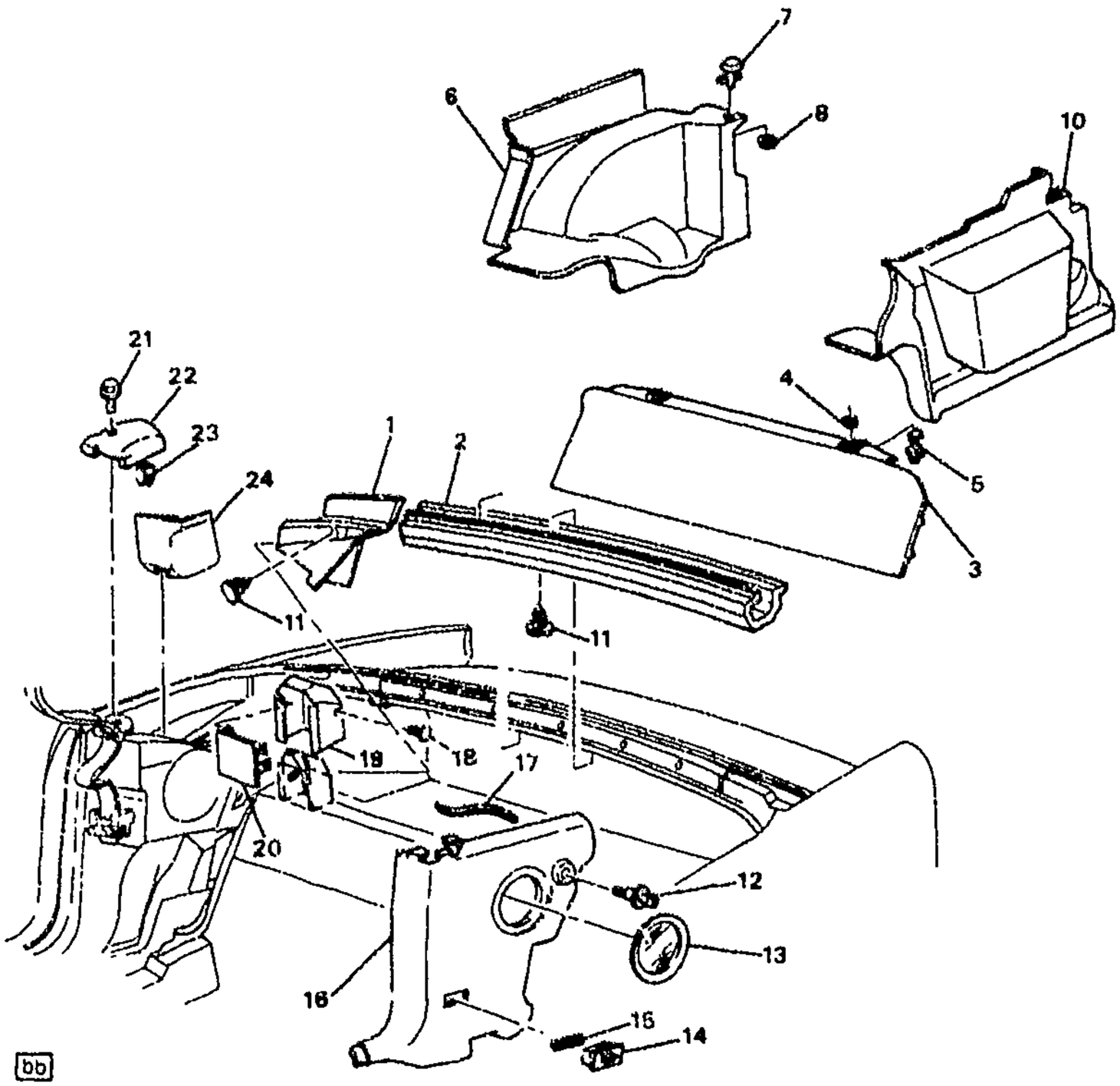

MF14-012

1994--2002 F67 TRIM/INTERIOR REAR

1.	11-N25	12.971	**MOLDING**, R/WDO DRN PNL GARN (GRAPHITE)	94-02	F67	RH	10206573
	11-N25	12.971	**MOLDING**, R/WDO DRN PNL GARN (GRAPHITE)	94-02	F67	LH	10268287
2.	11-N25	12.971	**MOLDING**, R/WDO DRN PNL GARN	94-02	F67	1	10245547
3.	11-N26	12.981	**PANEL**, R/CMPT CLOSEOUT (INCLS 4, 5) (GRAPHITE) (15.222)	94-02	F67	1	10246558
4.	11-D15	15.222	**WASHER**, R/CMPT CLOSEOUT PNL LAT (PART OF 3)	94-02	F67	2	10215551
5.	11-D15	15.222	**LATCH**, R/CMPT CLOSEOUT PNL (PART OF 3) (GRAPHITE)	94-02	F67	1	10230884
6.	11-D15	15.222	**PANEL**, R/CMPT SI TR (INCLS 7, 8) (BLACK MIST)	95-02	F67	RH	10257982
		DISCON	**PANEL**, R/CMPT SI TR (W/EMBOSSED BOWTIE LOGO) (INCLS 7, 8)	94	F67 (1ST DES)	RH	10240759

cardiagn.com

	11-D15	15.222	**PANEL**, R/CMPT SI TR (W/O EMBOSSED BOWTIE LOGO) (INCLS 7, 8) (BLACK MIST)	94	F67 (2ND DES)	RH	10257982
7.		N.S.	**RETAINER**, R/CMPT SI ACC TR FIN PNL (PUSH IN) (PART OF 6) .		.....		
8.	11-D15	15.222	**WASHER**, R/CMPT FRT TR (PART OF 6)	94-02	F67	1	10215551
10.	11-D15	15.222	**PANEL**, R/CMPT SI TR	94-02	F67	LH	10278261
11.		8.950	**RETAINER**, FITS .250 HOLE, 1.01LG.700-OD NYLON BLACK (R/WDO DRN PN'. GARN MLDG) .	94-02	.....	6	10121502
12.	11-N26	12.981	**BOLT**, R/CMPT ACC DR LK STKR (11.390)	94-02	F	2	16718900
	11-N26	12.981	**BOLT**, R/CMPT ACC DR LK STKR (M10X1.5X73.5) (W/ WASHER) ...	02	F	1	11518610
	11-N26	12.981	**BOLT**, R/CMPT ACC DR LK STKR (M10X1.5X73.5, 14 THD) (W/O WASHER)	02	F	1	11518611
13.	11-N5	9.665	**GRILLE**, RDO QTR SPKR (PART OF 16) (GRAPHITE)	94-97	F67	2	10270173
	11-N5	9.665	**GRILLE**, RDO QTR SPKR (PART OF 16) (GRAPHITE)	98-02	F	2	10270173
14.	11-N21	11.927	**LAMP**, QTR CTSY (INCLS 15) (9.988)	94-02	F67	2	10253755
15.		8.991	**BULB**, 12CP ID 561 (PART OF 14) (AC-DELCO #L561)	94-02	.....	2	9433040
16.	11-D9	15.100	**PANEL**, QTR INR TR FIN (INCLS 13, 16, 17, 22) (GRAPHITE)	94-96	.....	RH	10272916
	11-D9	15.100	**PANEL**, QTR INR TR FIN (INCLS 13, 16, 17, 22) (NEUTRAL)	97-02	F87	LH	16672105
	11-D9	15.100	**PANEL**, QTR INR TR FIN (INCLS 13, 16, 17, 22) (NEUTRAL)	97-02	F67 (EXC VD1)	RH	10421271
	11-D9	15.100	**PANEL**, QTR INR TR FIN (INCLS 13, 16, 17, 22) (NEUTRAL)	97-02	F87	RH	16672102
	11-D9	15.100	**PANEL**, QTR INR TR FIN (INCLS 13, 16, 17, 22) (NEUTRAL)	97-02	F67 (EXC VD1)	LH	10421272
17.		N.S.	**WEATHERSTRIP SECT**, (PART OF 16)		.....		
18.	11-B10	14.875	**RETAINER**, R/SEAT SHLDR BELT RETR TR CVR (OUTBOARD SI) ..	94-02	F67	2	10211824
19.	11-B10	14.875	**COVER**, R/SEAT SHLDR BELT RETR TR (GRAY)	94-96	F67 (14I)	RH	10211817
	11-B10	14.875	**COVER**, R/SEAT SHLDR BELT RETR TR (GRAPHITE)	94-96	F67 (12I, 73I)	RH	10211818
	11-B10	14.875	**COVER**, R/SEAT SHLDR BELT RETR TR (BEIGE)	94-95	F67 (64I)	RH	10211819
	11-B10	14.875	**COVER**, R/SEAT SHLDR BELT RETR TR (GRAY)	94-96	F67 (14I)	LH	10213090
	11-B10	14.875	**COVER**, R/SEAT SHLDR BELT RETR TR (GRAPHITE)	94-96	F67 (12I, 73I)	LH	10213091
	11-B10	14.875	**COVER**, R/SEAT SHLDR BELT RETR TR (BEIGE)	94-95	F67 (64I)	LH	10213092
	11-B10	14.875	**COVER**, R/SEAT SHLDR BELT RETR TR (NEUTRAL)	96-02	F67 (52I)	RH	10272369
	11-B10	14.875	**COVER**, R/SEAT SHLDR BELT RETR TR (NEUTRAL)	96-02	F87 (52I)	LH	10272370
	11-B10	14.875	**COVER**, R/SEAT SHLDR BELT RETR TR (GRAY)	97	F67 (10I, 14I, 73I, 92I) .	RH	10291379

cardiagn.com

	11-B10	14.875	COVER, R/SEAT SHLDR BELT RETR TR (GRAY)	97	F67 (10I, 14I, 73I, 92I)	LH	10291380
	11-B10	14.875	COVER, R/SEAT SHLDR BELT RETR TR (GRAY)	98-99	F67 (10I, 14I, 73I)	RH	10291379
	11-B10	14.875	COVER, R/SEAT SHLDR BELT RETR TR (GRAY)	98-99	F67 (10I, 14I, 73I)	LH	10291380
	11-B10	14.875	COVER, R/SEAT SHLDR BELT RETR TR (EBONY)	00-02	F67 (19I, 73I, 92I)	RH	10409910
	11-B10	14.875	COVER, R/SEAT SHLDR BELT RETR TR (EBONY)	00-02	F67 (19I, 73I, 92I)	LH	10409911
	11-B10	14.875	COVER, R/SEAT SHLDR BELT RETR TR (EBONY)	02	F67 (19I, 92I)	RH	10409910
	11-B10	14.875	COVER, R/SEAT SHLDR BELT RETR TR (EBONY)	02	F67 (19I, 92I)	LH	10409911
20.	11-B10	14.875	COVER, R/SEAT SHLDR BELT RETR ACC HOLE (GRAY)	94-96	F67 (14I)	RH	10211822
	11-B10	14.875	COVER, R/SEAT SHLDR BELT RETR ACC HOLE (GRAY)	94-96	F67 (14I)	LH	10211823
	11-B10	14.875	COVER, R/SEAT SHLDR BELT RETR ACC HOLE (GRAPHITE)	94-96	F67 (12I, 73I)	LH	10213093
	11-B10	14.875	COVER, R/SEAT SHLDR BELT RETR ACC HOLE (GRAPHITE)	94-96	F67 (12I, 73I)	RH	10213094
	11-B10	14.875	COVER, R/SEAT SHLDR BELT RETR ACC HOLE (BEIGE)	94-95	F67 (64I)	LH	10213095
	11-B10	14.875	COVER, R/SEAT SHLDR BELT RETR ACC HOLE (BEIGE)	94-95	F67 (64I)	RH	10213096
	11-B10	14.875	COVER, R/SEAT SHLDR BELT RETR ACC HOLE (NEUTRAL)	96-02	F67 (52I)	RH	10272371
	11-B10	14.875	COVER, R/SEAT SHLDR BELT RETR ACC HOLE (NEUTRAL)	96-02	F67 (52I)	LH	10272372
	11-B10	14.875	COVER, R/SEAT SHLDR BELT RETR ACC HOLE (GRAY)	97	F67 (10I, 14I, 73I, 92I)	RH	10291381
	11-B10	14.875	COVER, R/SEAT SHLDR BELT RETR ACC HOLE (GRAY)	97	F67 (10I, 14I, 73I, 92I)	LH	10291382
	11-B10	14.875	COVER, R/SEAT SHLDR BELT RETR ACC HOLE (GRAY)	98-99	F67 (10I, 14I, 73I)	LH	10291382
	11-B10	14.875	COVER, R/SEAT SHLDR BELT RETR ACC HOLE (GRAY)	98-99	F67 (10I, 14I, 73I)	RH	10291381
	11-B10	14.875	COVER, R/SEAT SHLDR BELT RETR ACC HOLE (EBONY)	00-02	F67 (19I, 73I, 92I)	RH	10409914
	11-B10	14.875	COVER, R/SEAT SHLDR BELT RETR ACC HOLE (EBONY)	00-01	F67 (19I, 73I, 92I)	LH	10409915
	11-B10	14.875	COVER, R/SEAT SHLDR BELT RETR ACC HOLE (EBONY)	02	F67 (19I, 92I)	RH	10409914
	11-B10	14.875	COVER, R/SEAT SHLDR BELT RETR ACC HOLE (EBONY)	02	F67 (19I, 92I)	LH	10409915
21.		3.977	SCREW, LG RD HD TORX TAP M4.2X1.41X20 SS BL OX (QTR INR TR FIN PNL)	94-02		2	10751144
22.		N.S.	EXTENSION, QTR INR TR FIN PNL (PART OF 16)				
23.	11-D9	15.100	RETAINER, QTR INR TR FIN PNL EXTN (PART OF 16)	94-02	F67	2	10226031
24.	11-N26	12.980	SHIELD, FLR PNL SPH (*1)	94-02	F67	RH	10267086
	11-N26	12.980	SHIELD, FLR PNL SPH (*1)	94-02	F67	LH	10267087

NOTE 1: PART APPEARANCE MAY DIFFER, BUT PARTS ARE INTERCHANGEABLE.

RPO DEFINITIONS

VD1 – PROVISION OPTIONS,EUROPE(EXPORT)

cardiagn.com

10! – INTERIOR TRIM – ARCTIC WHITE
12! – INTERIOR TRIM GRAPHITE
14! – INTERIOR TRIM LT GRAY
19! – INTERIOR TRIM,BLACK
52! – INTERIOR TRIM LIGHT NEUTRAL
64! – INTERIOR TRIM,LIGHT BEIGE
73! – INTERIOR TRIM,FLAME RED
92! – INTERIOR TRIM SHALE/PEWTER

cardiagn.com

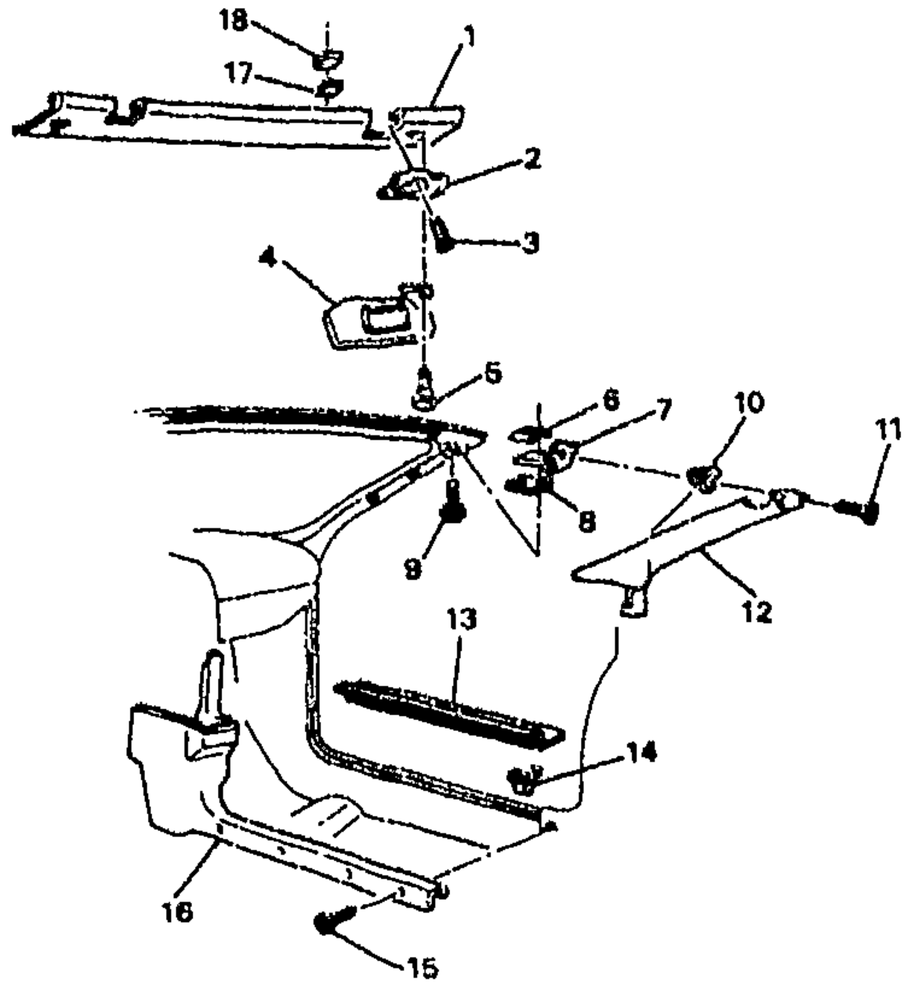

1F14-018

1994-2002 F67 TRIM/INTERIOR FRONT

1.	11-N6	10.051	MOLDING, W/S UPR GARN (INCLS 17, 18)	94-96	F67	1	10279510
	11-N6	10.051	MOLDING, W/S UPR GARN (INCLS 17, 18)	97-99	F67	1	10289150
	11-N6	10.051	MOLDING, W/S UPR GARN (INCLS 17, 18)	00-02	F67	1	10410026
2.	11-A16	14.080	STRIKER, F/TOP FRT LAT	94-02	F67	RH	10277200
	11-A16	14.080	STRIKER, F/TOP FRT LAT	94-02	F67	LH	10277201
3.	11-A16	14.080	BOLT, F/TOP FRT LAT STKR (CHROME) (M6X1.0X19.5 TORX NO) (10.474)	94-99	F67	4	20341140
	11-A16	14.080	BOLT, F/TOP FRT LAT STKR (BLACK) (16.330)	94-02	F67	4	20435412
	11-A16	14.080	BOLT, F/TOP FRT LAT STKR (M6X1.0X26 HEX) (8.900)	99-02	F67	4	10409170
4.	11-N7	10.203	SUNSHADE, (GRAPHITE)	94-95	F67	RH	12453679
	11-N7	10.203	SUNSHADE, (GRAPHITE)	94-95	F67 (12I)	LH	12453680
	11-N7	10.203	SUNSHADE, (GRAPHITE) (W/VAN MIRROR)	96	F67	RH	12453685
	11-N7	10.203	SUNSHADE, (GRAPHITE)	96	F67	LH	12453686
	11-N7	10.203	SUNSHADE, (NEUTRAL)	97-02	F67 (52I)	RH	10407222
	11-N7	10.203	SUNSHADE, (GRAY)	97	F67 (EXC Z49)	RH	10407224
	11-N7	10.203	SUNSHADE, (GRAY)	97	F67 (EXC Z49)	LH	10407225
	11-N7	10.203	SUNSHADE, (GRAY)	98-99	F67 (EXC D21, Z49)	RH	10407224
	11-N7	10.203	SUNSHADE, (GRAY)	98-99	F67 (EXC D21, Z49)	LH	10407225
	11-N7	10.203	SUNSHADE, (GRAY)	98-99	F67 (Z49)	RH	10409542
	11-N7	10.203	SUNSHADE, (GRAY)	98-99	F67 (Z49)	LH	10409543
	11-N7	10.203	SUNSHADE, (EBONY)	00-02	F67 (EXC D21, Z49)	RH	10410035
	11-N7	10.203	SUNSHADE, (EBONY)	00-02	F67 (EXC D21, Z49)	LH	10410036
	11-N7	10.203	SUNSHADE, (EBONY)	00-02	F67 (Z49)	RH	10410037
	11-N7	10.203	SUNSHADE, (EBONY)	00-02	F67 (Z49)	LH	10410038

cardiagn.com

	11-N7	10.203	SUNSHADE, (EBONY)	01-02	F67 (D21)	LH	10410034
	11-N7	10.203	SUNSHADE, (EBONY)	02	F67 (D21)	RH	10410033
	11-N7	10.203	SUNSHADE, (GRAY)	98-99	F67 (D21) (EXPORT)	RH	10407209
	11-N7	10.203	SUNSHADE, (GRAY)	98-99	F67 (D21) (EXPORT)	LH	10407210
	11-N7	10.203	SUNSHADE, (EBONY)	00-02	F67 (D21) (EXPORT)	RH	10410033
5.		8.977	SCREW, OV HD C/R W/TR WA, M4.2X1.41X20, NZ (S/S)	94-02		AR	11516665
6.	11-N23	12.810	RETAINER, RF LIFT OFF PNL/WDO FRT NUT PLT	94-02	F67	2	10214021
7.	11-N25	12.811	STRIKER, RF LIFT OFF PNL/WDO FRT	94-02	F67	2	10262548
8.	11-N23	12.810	PLATE, RF LIFT OFF PNL/WDO FRT STKR BRKT (APPROX "2" PER SIDE "4" PER VEHICLE) (2MM THICK)	94-02	F67	AR	10178053
9.		8.900	BOLT, HEX W/CON WA, M6X1X25, 20 THD, 9.8, DO (RF RR PNL LAT STKR)	94-02	F67	4	15650674
10.	11-N6	10.056	CLIP, W/S SI UPR G/MLDG (PART OF 12) (0.63 SPRING STEEL)	94-02	F	2	16662182
	11-N6	10.056	CLIP, W/S SI UPR G/MLDG (PART OF 12) (METAL, S-SHAPED) (15.100)	94-02	F (EXC CC1)	2	20477070
11.		8.977	SCREW, OV HD C/R W/TR WA, M4.2X1.41X20, NZ (W/S G/MLDG)	94-02		AR	11516665
12.	11-N6	10.051	MOLDING, W/S SI UPR GARN (INCLS 10)	94-96	F67	RH	10246738
	11-N6	10.051	MOLDING, W/S SI UPR GARN (INCLS 10)	94-96	F67	LH	10246739
	11-N6	10.051	MOLDING, W/S SI UPR GARN (INCLS 10) (GRAPHITE)	94-99	F67	RH	10408111
	11-N6	10.051	MOLDING, W/S SI UPR GARN (INCLS 10)	96-98	F67	LH	10246737
	11-N6	10.051	MOLDING, W/S SI UPR GARN (INCLS 10)	00-02	F67	RH	10410022
	11-N6	10.051	MOLDING, W/S SI UPR GARN (INCLS 10)	00-02	F67	LH	10410023
13.	11-N13	11.175	PLATE, FRT S/D SILL TR (INCLS 14) (BLACK)	94-02	F	2	10159122
14.	11-N13	11.175	CLIP, FRT S/D SILL TR PLT (PART OF 13) (0.63 SPRING STEEL) (10.056)	94-02	F	4	16662182
	11-N13	11.175	CLIP, FRT S/D SILL TR PLT (PART OF 13) (0.63 SPRING STEEL) (10.056)	02	F (EXC CC1)	4	16662182
15.		N.S.	BOLT, BODY H/PLR TR				
16.	11-A21	14.630	PANEL, BODY H/PLR TR (BEIGE)	94-95	F (64I)	LH	10226286
	11-A21	14.630	PANEL, BODY H/PLR TR (GRAY)	94-95	F (14I)	LH	10226290
	11-A21	14.630	PANEL, BODY H/PLR TR (BEIGE)	94-95	F (64I)	RH	10247458
	11-A21	14.630	PANEL, BODY H/PLR TR (GRAPHITE)	94-95	F (12I, 73I)	LH	10284842
	11-A21	14.630	PANEL, BODY H/PLR TR (GRAY)	95	F (14I)	RH	10247460
	11-A21	14.630	PANEL, BODY H/PLR TR (GRAPHITE)	96	F (12I, 14I, 73I)	RH	10247459
	11-A21	14.630	PANEL, BODY H/PLR TR (GRAPHITE)	96	F (12I, 14I, 73I)	LH	10284842

cardiagn.com

	11-A21	14.630	PANEL, BODY H/PLR TR (NEUTRAL)	96-02	F (52I)	LH	10285356
	11-A21	14.630	PANEL, BODY H/PLR TR	96-02	F (52I)	RH	10308653
	11-A21	14.630	PANEL, BODY H/PLR TR (GRAY)	97	F (10I, 14I, 73I, 92I)	RH	10272178
	11-A21	14.630	PANEL, BODY H/PLR TR (GRAY)	97	F (10I, 14I, 73I, 92I)	LH	10284845
	11-A21	14.630	PANEL, BODY H/PLR TR (GRAY)	98-99	F (10I, 14I, 73I)	RH	10272178
	11-A21	14.630	PANEL, BODY H/PLR TR (GRAY)	98-99	F (10I, 14I, 73I)	LH	10284845
	11-A21	14.630	PANEL, BODY H/PLR TR (EBONY)	00-01	F (19I, 73I, 92I)	RH	10409936
	11-A21	14.630	PANEL, BODY H/PLR TR (EBONY)	00-01	F (19I, 73I, 92I)	LH	10409937
	11-A21	14.630	PANEL, BODY H/PLR TR (EBONY)	02	F (19I, 92I)	RH	10409936
	11-A21	14.630	PANEL, BODY H/PLR TR (EBONY)	02	F (19I, 92I)	LH	10409937
17.		8.958	TAPE, HOOK FSTN, 25.4MMX25 YD ROLL HIGH CYCLE FSTNR-VELCRO (PART OF 1) ..	94-02	.....	AR	12520271
18.		8.958	VELCRO, (LOOP) 25.4MMX25 YD ROLL LOW CYCLE HIGH STRENGTH (PART OF 1)	94-02	.....	AR	12520273

RPO DEFINITIONS

CC1 – ROOF,HATCH,REMOVABLE PANELS,GLASS
D21 -- SUNSHADE WINDSHIELD(EXPORT)
Z49 – MANDATORY CANADIAN BASE EQUIPMENT MODIFICATIONS(CANADIAN)
10I – INTERIOR TRIM – ARCTIC WHITE
12I – INTERIOR TRIM GRAPHITE
14I – INTERIOR TRIM LT GRAY
19I – INTERIOR TRIM,BLACK
52I – INTERIOR TRIM LIGHT NEUTRAL
64I – INTERIOR TRIM,LIGHT BEIGE
73I – INTERIOR TRIM,FLAME RED
92I – INTERIOR TRIM SHALE/PEWTER

cardiagn.com

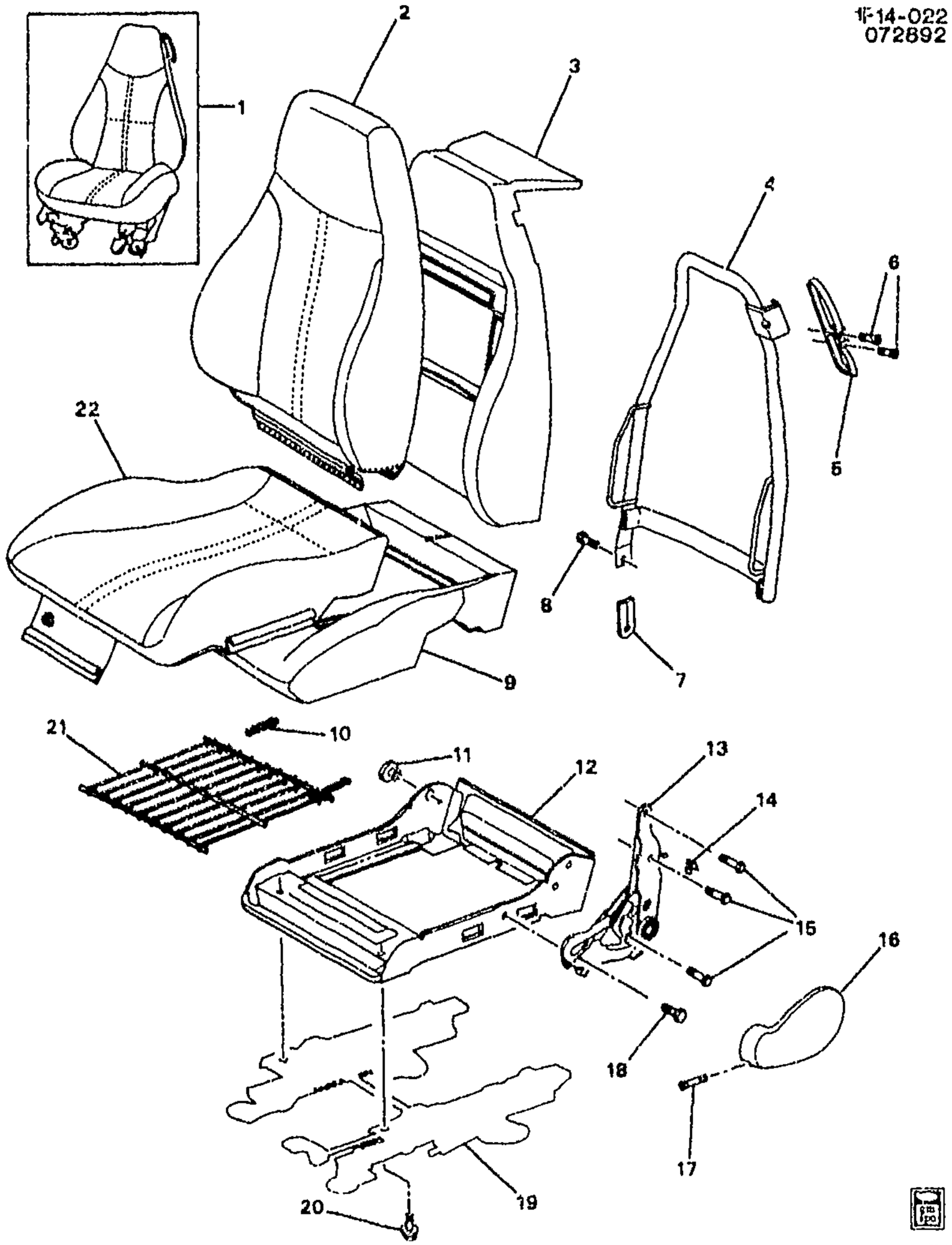

1993-2002 F SEAT ASM/FRONT

1.		N.S.	SEAT DRVR (FOR AVAIL. OF COMPLETE FRT SEATS CONTACT GMSPO PARTECH. PROVIDE VIN/TRI CODE.)		.....	
		N.S.	SEAT, PASS (*1)		.....	
2.	11-A26	14.800	COVER, D/SEAT BK CUSH (GRAY)	93-95	F (AR9, 12B, 14B)	1 16730227

cardiagn.com

	DISCON	COVER, D/SEAT BK CUSH (BEIGE)	93–95	F (AR9, 64B)	1	16730228
11–A26	14.800	COVER, D/SEAT BK CUSH (GRAPHITE)	93	F87 (AR9, 12C)	1	16740059
11–A26	14.800	COVER, D/SEAT BK CUSH (RED)	94–95	F (AR9, 73B)	1	16748716
11–A26	14.800	COVER, D/SEAT BK CUSH (GRAPHITE)	94–96	F (AR9, AG1, AH3, 122)	1	16778852
11–A26	14.800	COVER, D/SEAT BK CUSH (BEIGE)	94–95	F (AR9, 642)	1	16778853
11–A26	14.800	COVER, D/SEAT BK CUSH (GRAPHITE)	96	F (AH3, AR9, AG1, AG4, 12B)	1	16789182
11–A26	14.800	COVER, D/SEAT BK CUSH (GRAY)	96	F (AH3, AR9, AG1, AG4, 14B)	1	16789183
11–A26	14.800	COVER, D/SEAT BK CUSH (NEUTRAL)	96	F (AH3, AR9, AG1, AG4, 52B)	1	16789184
11–A26	14.800	COVER, D/SEAT BK CUSH (RED)	96	F (AH3, AR9, AG1, AG4, 73B)	1	16789185
11–A26	14.800	COVER, D/SEAT BK CUSH (NEUTRAL)	96	F (AG1, AR9, AH3, 522) (EXC VE1)	1	16789212
11–A26	14.800	COVER, D/SEAT BK CUSH (PEWTER)	97	F (AR9, 92B) (EXC VE1)	1	16795287
11–A26	14.800	COVER, D/SEAT BK CUSH (GRAY)	97	F (AR9, 14B) (EXC VE1)	1	16795288
11–A26	14.800	COVER, D/SEAT BK CUSH (NEUTRAL)	97	F (AR9, 52B) (EXC VE1)	1	16795289
11–A26	14.800	COVER, D/SEAT BK CUSH (RED)	97	F (AR9, 73B) (EXC VE1)	1	16795290
11–A26	14.800	COVER, D/SEAT BK CUSH (GRAY)	97	F (AG1, AH3, AR9, 142) (EXC VE1)	1	16795297
11–A26	14.800	COVER, D/SEAT BK CUSH (NEUTRAL)	97	F (AG1, AH3, AR9, 522) (EXC VE1)	1	16795298
11–A26	14.800	COVER, D/SEAT BK CUSH (WHITE)	97	F (AG1, AR9, 103)	1	16795301
11–A26	14.800	COVER, D/SEAT BK CUSH (WHITE)	97	F (AG1, AR9, 10C)	1	16799227
11–A26	14.800	COVER, D/SEAT BK CUSH (NEUTRAL)	98–02	F (AG1, AQ9, 524)	1	16787332
11–A26	14.800	COVER, D/SEAT BK CUSH (GRAY)	98–99	F (AG1, AH3, AQ9, 144)	1	16795307
11–A26	14.800	COVER, D/SEAT BK CUSH (GRAY)	98–99	F (AR9, 14D)	1	16795370
11–A26	14.800	COVER, D/SEAT BK CUSH (NEUTRAL)	98–99	F (AR9, 52D)	1	16795371
11–A26	14.800	COVER, D/SEAT BK CUSH (GRAY)	98–99	F (AH3, AR9, 14B)	1	16805569
11–A26	14.800	COVER, D/SEAT BK CUSH (NEUTRAL)	98–99	F (AR9, 52B)	1	16805570
11–A26	14.800	COVER, D/SEAT BK CUSH (RED)	98–99	F (AR9, 73B)	1	16805571
11–A26	14.800	COVER, D/SEAT BK CUSH (WHITE)	98–99	F (AR9, 102)	1	16805573
11–A26	14.800	COVER, D/SEAT BK CUSH (GRAY)	98–99	F (AR9, 142)	1	16805574
11–A26	14.800	COVER, D/SEAT BK CUSH (NEUTRAL)	98–99	F (AG1, AR9, 522) (EXC VE1)	1	16805575
11–A26	14.800	COVER, D/SEAT BK CUSH (NEUTRAL)	98–99	F (AH3, AR9, 522)	1	16805575
11–A26	14.800	COVER, D/SEAT BK CUSH (NEUTRAL)	00–02	F (AR9, 522)	1	16805575

cardiagn.com

11-A26	14.800	COVER, D/SEAT BK CUSH (EBONY)	00-02	F (AR9, 19B)	1	16837676
11-A26	14.800	COVER, D/SEAT BK CUSH (RED)	00-01	F (AR9, 73B)	1	16837678
11-A26	14.800	COVER, D/SEAT BK CUSH (PEWTER)	00-02	F (AR9, 92B)	1	16837679
11-A26	14.800	COVER, D/SEAT BK CUSH (EBONY)	00-02	F (AR9, 192)	1	16837696
11-A26	14.800	COVER, D/SEAT BK CUSH (EBONY)	00-02	F (AR9, 19D)	1	16837702
11-A26	14.800	COVER, D/SEAT BK CUSH (EBONY)	00-02	F (AG1, AQ9, 194)	1	16837703
11-A26	14.800	COVER, D/SEAT BK CUSH (EBONY)	02	F (AR9, 193)	1	16837696
11-A26	14.800	COVER, P/SEAT BK CUSH (GRAY)	93-95	F (AR9, 12B, 14B)	1	16730227
	DISCON	COVER, P/SEAT BK CUSH (BEIGE)	93-95	F (AR9, 64B)	1	16730228
	DISCON	COVER, P/SEAT BK CUSH (GRAPHITE)	93	F87 (AR9, 12C)	1	16740058
11-A26	14.800	COVER, P/SEAT BK CUSH (RED)	94-95	F (AR9, 73B)	1	16748716
11-A26	14.800	COVER, P/SEAT BK CUSH (GRAPHITE)	94-96	F (AR9, 122)	1	16778852
11-A26	14.800	COVER, P/SEAT BK CUSH (BEIGE)	94-95	F (AR9, 642)	1	16778853
11-A26	14.800	COVER, P/SEAT BK CUSH (GRAPHITE)	96	F (AR9, 12B) (EXC VE1)	1	16789182
11-A26	14.800	COVER, P/SEAT BK CUSH (GRAY)	96	F (AR9, 14B) (EXC VE1)	1	16789183
11-A26	14.800	COVER, P/SEAT BK CUSH (NEUTRAL)	96	F (AR9, 52B) (EXC VE1)	1	16789184
11-A26	14.800	COVER, P/SEAT BK CUSH (RED)	96	F (AR9, 73B) (EXC VE1)	1	16789185
11-A26	14.800	COVER, P/SEAT BK CUSH (NEUTRAL)	96	F (AR9, 522) (EXC VE1)	1	16789212
11-A26	14.800	COVER, P/SEAT BK CUSH (PEWTER)	97	F (AR9, 92B) (EXC VE1)	1	16795287
11-A26	14.800	COVER, P/SEAT BK CUSH (GRAY)	97	F (AR9, 14B) (EXC VE1)	1	16795288
11-A26	14.800	COVER, P/SEAT BK CUSH (NEUTRAL)	97	F (AR9, 52B) (EXC VE1)	1	16795289
11-A26	14.800	COVER, P/SEAT BK CUSH (RED)	97	F (AR9, 73B) (EXC VE1)	1	16795290
11-A26	14.800	COVER, P/SEAT BK CUSH (GRAY)	97	F (AR9, 142) (EXC VE1)	1	16795297
11-A26	14.800	COVER, P/SEAT BK CUSH (NEUTRAL)	97	F (AR9, 522) (EXC VE1)	1	16795298
11-A26	14.800	COVER, P/SEAT BK CUSH (WHITE)	97	F (AR9, 103)	1	16795301
11-A26	14.800	COVER, P/SEAT BK CUSH (WHITE)	97	F (AR9, 10C)	1	16799227
11-A26	14.800	COVER, P/SEAT BK CUSH (NEUTRAL)	98-99	F (AQ9, 524)	1	16787332
11-A26	14.800	COVER, P/SEAT BK CUSH (GRAY)	98-99	F (AQ9, 144)	1	16795307
11-A26	14.800	COVER, P/SEAT BK CUSH (GRAY)	98-99	F (AR9, 14D)	1	16795370
11-A26	14.800	COVER, P/SEAT BK CUSH (NEUTRAL)	98-99	F (AR9, 52D)	1	16795371
11-A26	14.800	COVER, P/SEAT BK CUSH (GRAY)	98-99	F (AR9, 14B) (EXC VE1)	1	16805569

cardiagn.com

11-A26	14.800	COVER, P/SEAT BK CUSH (NEUTRAL)	98-99	F (AR9, 52B) (EXC VE1)	1	16805570
11-A26	14.800	COVER, P/SEAT BK CUSH (RED)	98-99	F (AR9, 73B) (EXC VE1)	1	16805571
11-A26	14.800	COVER, P/SEAT BK CUSH (WHITE)	98-99	F (AR9, 102)	1	16805573
11-A26	14.800	COVER, P/SEAT BK CUSH (GRAY)	98-99	F (AR9, 142) (EXC VE1)	1	16805574
11-A26	14.800	COVER, P/SEAT BK CUSH (NEUTRAL)	98-99	F (AR9, 522) (EXC VE1)	1	16805575
11-A26	14.800	COVER, P/SEAT BK CUSH (NEUTRAL)	00-02	F (AR9, 522)	1	16805575
11-A26	14.800	COVER, P/SEAT BK CUSH (EBONY)	00-02	F (AR9, 19B)	1	16837676
11-A26	14.800	COVER, P/SEAT BK CUSH (PEWTER)	00-02	F (AR9, 92B)	1	16837679
11-A26	14.800	COVER, P/SEAT BK CUSH (EBONY)	00-02	F (AR9, 192)	1	16837696
11-A26	14.800	COVER, P/SEAT BK CUSH (EBONY)	00-02	F (AR9, 19D)	1	16837702
11-A26	14.800	COVER, P/SEAT BK CUSH (NEUTRAL)	00-02	F67 (AQ9, 524)	1	16787332
11-A26	14.800	COVER, P/SEAT BK CUSH (EBONY)	00-02	F67 (AQ9, 194)	1	16837703
11-A26	14.800	COVER, P/SEAT BK CUSH (EBONY)	02	F87 (AR9, 193)	1	16837696
11-A26	14.800	COVER, D/SEAT BK CUSH (GRAPHITE)	96	F (AG1, AR9, VE1, 12B) (EXPORT)	1	16789202
11-A26	14.800	COVER, D/SEAT BK CUSH (GRAY)	96	F (AG1, AR9, VE1, 14B) (EXPORT)	1	16789203
11-A26	14.800	COVER, D/SEAT BK CUSH (NEUTRAL)	96	F (AG1, AR9, VE1, 52B) (EXPORT)	1	16789204
11-A26	14.800	COVER, D/SEAT BK CUSH (RED)	96	F (AG1, AR9, VE1, 73B) (EXPORT)	1	16789205
11-A26	14.800	COVER, D/SEAT BK CUSH (GRAPHITE)	96	F (AG1, AR9, VE1, 122) (EXPORT)	1	16789207
11-A26	14.800	COVER, D/SEAT BK CUSH (NEUTRAL)	96	F (AG1, AR9, VE1, 522) (EXPORT)	1	16789208
11-A26	14.800	COVER, D/SEAT BK CUSH (NEUTRAL)	97	F (AR9, 522, VE1) (EXPORT)	1	16795245
11-A26	14.800	COVER, D/SEAT BK CUSH (PEWTER)	97	F (AR9, VE1, 92B) (EXPORT)	1	16795292
11-A26	14.800	COVER, D/SEAT BK CUSH (GRAY)	97	F (AR9, VE1, 14B) (EXPORT)	1	16795293
11-A26	14.800	COVER, D/SEAT BK CUSH (NEUTRAL)	97	F (AR9, VE1, 52B) (EXPORT)	1	16795294
11-A26	14.800	COVER, D/SEAT BK CUSH (RED)	97	F (AR9, VE1, 73B) (EXPORT)	1	16795295
11-A26	14.800	COVER, D/SEAT BK CUSH (GRAY)	97	F (AG1, AR9, VE1, 142) (EXPORT)	1	16795300
11-A26	14.800	COVER, D/SEAT BK CUSH (GRAY)	98-99	F (AR9, VE1, 14B) (EXPORT)	1	16806014
11-A26	14.800	COVER, D/SEAT BK CUSH (NEUTRAL)	98-99	F (AR9, VE1, 52B) (EXPORT)	1	16806015
11-A26	14.800	COVER, D/SEAT BK CUSH (RED)	98-99	F (AR9, VE1, 73B) (EXPORT)	1	16806016
11-A26	14.800	COVER, D/SEAT BK CUSH (GRAY)	98-99	F (AR9, VE1, 142) (EXPORT)	1	16806019

cardiagn.com

	11-A26	14.800	COVER, D/SEAT BK CUSH (NEUTRAL)	98-99	F (AG1, AR9, VE1, 522) (EXPORT)	1	16806020
	11-A26	14.800	COVER, D/SEAT BK CUSH (PEWTER)	00	F (AG1, AR9, VE1, 92B) (EXPORT)	1	16837683
	11-A26	14.800	COVER, P/SEAT BK CUSH (GRAPHITE)	96	F (AR9, VE1, 12B) (EXPORT)	1	16789202
	11-A26	14.800	COVER, P/SEAT BK CUSH (GRAY)	96	F (AR9, VE1, 14B) (EXPORT)	1	16789203
	11-A26	14.800	COVER, P/SEAT BK CUSH (NEUTRAL)	96	F (AR9, VE1, 52B) (EXPORT)	1	16789204
	11-A26	14.800	COVER, P/SEAT BK CUSH (RED)	96	F (AR9, VE1, 73B) (EXPORT)	1	16789205
	11-A26	14.800	COVER, P/SEAT BK CUSH (GRAPHITE)	96	F (AR9, VE1, 122) (EXPORT)	1	16789207
	11-A26	14.800	COVER, P/SEAT BK CUSH (NEUTRAL)	96	F (AR9, VE1, 522) (EXPORT)	1	16789208
	11-A26	14.800	COVER, P/SEAT BK CUSH (NEUTRAL)	97	F (AR9, 522, VE1) (EXPORT)	1	16795245
	11-A26	14.800	COVER, P/SEAT BK CUSH (PEWTER)	97	F (AR9, VE1, 92B) (EXPORT)	1	16795292
	11-A26	14.800	COVER, P/SEAT BK CUSH (GRAY)	97	F (AR9, VE1, 14B) (EXPORT)	1	16795293
	11-A26	14.800	COVER, P/SEAT BK CUSH (NEUTRAL)	97	F (AR9, VE1, 52B) (EXPORT)	1	16795294
	11-A26	14.800	COVER, P/SEAT BK CUSH (RED)	97	F (AR9, VE1, 73B) (EXPORT)	1	16795295
	11-A26	14.800	COVER, P/SEAT BK CUSH (GRAY)	97	F (AR9, VE1, 142) (EXPORT)	1	16795300
	11-A26	14.800	COVER, P/SEAT BK CUSH (GRAY)	98-99	F (AR9, VE1, 14B) (EXPORT)	1	16806014
	11-A26	14.800	COVER, P/SEAT BK CUSH (NEUTRAL)	98-99	F (AR9, VE1, 52B) (EXPORT)	1	16806015
	11-A26	14.800	COVER, P/SEAT BK CUSH (RED)	98-99	F (AR9, VE1, 73B) (EXPORT)	1	16806016
	11-A26	14.800	COVER, P/SEAT BK CUSH (GRAY)	98-99	F (AR9, VE1, 142) (EXPORT)	1	16806019
	11-A26	14.800	COVER, P/SEAT BK CUSH (NEUTRAL)	98-99	F (AR9, VE1, 522) (EXPORT)	1	16806020
	11-A26	14.800	COVER, P/SEAT BK CUSH (PEWTER)	00	F (AR9, VE1, 92B) (EXPORT)	1	16837683
	11-A26	14.800	COVER, P/SEAT BK CUSH (NEUTRAL)	00-02	F87 (AQ9, AX4, 524) (EXPORT)	1	16787332
	11-A26	14.800	COVER, P/SEAT BK CUSH (EBONY)	00-02	F87 (AQ9, AX4, 194) (EXPORT)	1	16837703
3.	11-B5	14.802	PAD, D/SEAT BK CUSH (W/WIRE) (NO CUTOUT AT GDE LOOP BRKT)	94-95	F (AR9)	1	17908796
	11-B5	14.802	PAD, D/SEAT BK CUSH (W/WIRE) (CUTOUT AT GDE LOOP BRKT)	95-96	F87 (AR9)	1	16739023
	11-B5	14.802	PAD, D/SEAT BK CUSH (W/WIRE) (CUTOUT AT GDE LOOP BRKT)	96	FP67 (AG1, AH3, AR9)	1	16739023
	11-B5	14.802	PAD, D/SEAT BK CUSH (W/WIRE) (USE W/TRIM CODE ENDING IN 2) (CUTOUT AT GDE LOOP BRKT)	94-95	F (AR9)	1	16739023

cardiagn.com

	11-B5	14.802	PAD, D/SEAT BK CUSH (W/WIRE) (USE W/TRIM CODES ENDING IN B, C) (CUTOUT AT GDE LOOP BRKT)	93	F67 (AR9)	1	16739023
	11-B5	14.802	PAD, D/SEAT BK CUSH (W/WIRE) (USE W/TRIM CODES ENDING IN B, C) (CUTOUT AT GDE LOOP BRKT)	93	F87 (AC3, AH3, AR9) ..	1	16739023
	11-B5	14.802	PAD, D/SEAT BK CUSH (W/WIRE) (USE W/TRIM CODES ENDING IN B, 2) (CUTOUT AT GDE LOOP BRKT)	94	F87 (AC3, AH3, AR9) ..	1	16739023
	11-B5	14.802	PAD, P/SEAT BK CUSH (NO CUTOUT AT GDE LOOP BRKT) ..	93-94	F67 (AR9)	1	17908796
	11-B5	14.802	PAD, P/SEAT BK CUSH (USE W/TRIM CODE ENDING IN D) ...	98-02	F (AR9)	1	17908802
	11-B5	14.802	PAD, P/SEAT BK CUSH (USE W/TRIM CODE ENDING IN 4)	98-02	F67 (AQ9)	1	16739034
	11-B5	14.802	PAD, P/SEAT BK CUSH (USE W/TRIM CODES END IN 2) (NO CUTOUT AT GDE LOOP BRKT) ..	95-96	F (AR9)	1	17908796
	11-B5	14.802	PAD, P/SEAT BK CUSH (USE W/TRIM CODES ENDING IN B, C, 2, 3)	96-97	F (AR9)	1	16795504
	11-B5	14.802	PAD, P/SEAT BK CUSH (USE W/TRIM CODES ENDING IN B, 2)	98-01	F (AR9)	1	16795504
	11-B5	14.802	PAD, P/SEAT BK CUSH (USE W/TRIM CODES ENDING IN B, 2, 3)	02	F (AR9)	1	16795504
	11-B5	14.802	PAD, P/SEAT BK CUSH (USE W/TRIM CODE ENDING IN 4)	98-02	F87 (AQ9, AX4) (EXPORT)	1	16739034
4.	11-N13	11.373	FRAME, D/SEAT BK CUSH (USE W/TRIM CODE ENDING IN B) (INCLS 8)	97	F87 (AG4, AR9)	1	16800625
	11-N13	11.373	FRAME, D/SEAT BK CUSH (USE W/TRIM CODE ENDING IN 4) (INCLS 8) (COMPLETE)	98-01	F (AG1, AR9)	1	16748363
		DISCON	FRAME, D/SEAT BK CUSH (USE W/TRIM CODES ENDING IN B, C) (INCLS 8)	93	F87 (AR9)	1	15711317
	11-N13	11.373	FRAME, D/SEAT BK CUSH (USE W/TRIM CODES ENDING IN B, 2) (INCLS 8) (W/ST BELT GDE LOOP)	94	F (AC3, AH3, AR9)	1	16748357
	11-N13	11.373	FRAME, D/SEAT BK CUSH (USE W/TRIM CODES ENDING IN B, 2) (INCLS 8) (W/ST BELT GDE LOOP)	95-96	F67 (AG1, AH3, AR9) ..	1	16748357
	11-N13	11.373	FRAME, D/SEAT BK CUSH (USE W/TRIM CODES ENDING IN B, 2) (INCLS 8) (W/ST BELT GDE LOOP)	95-96	F87 (AG1, AG4, AH3, AR9)	1	16748357
	11-N13	11.373	FRAME, D/SEAT BK CUSH (USE W/TRIM CODES ENDING IN B, C, 2, 3) (INCLS 8)	97	F (AG1, AR9)	1	16800625
	11-N13	11.373	FRAME, D/SEAT BK CUSH (USE W/TRIM CODES ENDING IN B, 2) (INCLS 8)	97	F (AH3, AR9)	1	16800625

cardiagn.com

	11-N13	11.373	**FRAME**, D/SEAT BK CUSH (USE W/TRIM CODES ENDING IN D, 4) (INCLS 8)	98-99	F (AG1, AH3, AQ9, AR9)	1	16748361
	11-N13	11.373	**FRAME**, D/SEAT BK CUSH (USE W/TRIM CODES ENDING IN B, 2) (INCLS 8)	98-99	F (AG1, AH3, AR9)	1	16800625
	11-N13	11.373	**FRAME**, D/SEAT BK CUSH (USE W/TRIM CODES ENDING IN D, 4) (INCLS 8)	00-02	F (AQ9, AR9)	1	16748361
	11-N13	11.373	**FRAME**, D/SEAT BK CUSH (USE W/TRIM CODES ENDING IN B, 2) (INCLS 8)	00-02	F (AR9)	1	16800625
	11-N13	11.373	**FRAME**, D/SEAT BK CUSH (USE W/TRIM CODES ENDING IN 3) (INCLS 8)	02	F67 (AG1, AR9)	1	16800625
	11-N13	11.373	**FRAME**, P/SEAT BK CUSH (USE W/TRIM CODE ENDING IN 4) (INCLS 8) (COMPLETE)	98-02	F (AQ9)	1	16748362
	11-N13	11.373	**FRAME**, P/SEAT BK CUSH (USE W/TRIM CODES ENDING IN B, 2) (INCLS 8) (W/ST BELT GDE LOOP)	93-96	F (AR9)	1	16748356
	11-N13	11.373	**FRAME**, P/SEAT BK CUSH (USE W/TRIM CODES ENDING IN B, C, 2, 3) (INCLS 8) (INCLS FRAME, SUPPORT, WIRES, BRACKET) ...	97	F (AR9)	1	16800624
	11-N13	11.373	**FRAME**, P/SEAT BK CUSH (USE W/TRIM CODES ENDING IN B, 2) (INCLS 8) (INCLS FRAME, SUPPORT, WIRES, BRACKET) ...	98-01	F (AR9)	1	16800624
	11-N13	11.373	**FRAME**, P/SEAT BK CUSH (USE W/TRIM CODES ENDING IN D, 4) (INCLS 8) (W/FRAME, TUBE)	98-01	F67 (AR9, AQ9)	1	16748360
	11-N13	11.373	**FRAME**, P/SEAT BK CUSH (USE W/TRIM CODES ENDING IN 4) (INCLS 8) (W/FRAME, TUBE) ...	98-01	F87 (AQ9, AX4)	1	16748360
	11-N13	11.373	**FRAME**, P/SEAT BK CUSH (USE W/TRIM CODES ENDING IN D, 4) (INCLS 8) (W/FRAME, TUBE)	02	F (AR9, AQ9)	1	16748360
	11-N13	11.373	**FRAME**, P/SEAT BK CUSH (USE W/TRIM CODES ENDING IN B, 2, 3) (INCLS 8) (INCLS FRAME, SUPPORT, WIRES, BRACKET) ...	02	F (AR9)	1	16800624
5.	11-B10	14.875	**GUIDE**, D/SEAT SHLDR BELT (GRAPHITE)	96	F87 (AR9, 12I, 14I, 73I) .	1	16730219
	11-B10	14.875	**GUIDE**, D/SEAT SHLDR BELT (GRAY)	96	F (AH3, AG1, AR9, 14B)	1	16730221
	11-B10	14.875	**GUIDE**, D/SEAT SHLDR BELT (NEUTRAL)	96-97	F87 (AQ9, AR9, 52I) ...	1	16789715
	11-B10	14.875	**GUIDE**, D/SEAT SHLDR BELT (GRAY)	97	F67 (AR9, 10C, 14B, 73B, 103, 142)	1	16799317
	11-B10	14.875	**GUIDE**, D/SEAT SHLDR BELT (NEUTRAL)	97	F67 (AN3, AR9, 52B, 522)	1	16799319
	11-B10	14.875	**GUIDE**, D/SEAT SHLDR BELT (PEWTER)	97	F67 (AR9, 92B)	1	16799321
	11-B10	14.875	**GUIDE**, D/SEAT SHLDR BELT (GRAY)	97	F87 (AG1, AR9, 14B, 73B)	1	16799273

cardiagn.com

11-B10	14.875	GUIDE, D/SEAT SHLDR BELT (GRAY)	97	F87 (AG4, AH3, AR9, 14B, 73B) (EXC VE1)	1	16799273
11-B10	14.875	GUIDE, D/SEAT SHLDR BELT (PEWTER)	97	F87 (AR9, 92B)	1	16799275
11-B10	14.875	GUIDE, D/SEAT SHLDR BELT (GRAY)	97	FP87 (AG1, AR9, 10C, 103, 142)	1	16799273
11-B10	14.875	GUIDE, D/SEAT SHLDR BELT (GRAY)	97	FP87 (AH3, AR9, 142) (EXC VE1)	1	16799273
11-B10	14.875	GUIDE, P/SEAT SHLDR BELT (GRAPHITE)	93	F87 (AR9, 12I, 14I)	1	16735696
11-B10	14.875	GUIDE, P/SEAT SHLDR BELT (BEIGE)	93	F87 (AR9, 64I)	1	16735698
11-B10	14.875	GUIDE, P/SEAT SHLDR BELT (GRAPHITE)	94-96	F87 (AR9, 12I, 14I, 73I)	1	16730218
11-B10	14.875	GUIDE, P/SEAT SHLDR BELT (BEIGE)	94-95	F87 (AR9, 64I)	1	16730222
11-B10	14.875	GUIDE, P/SEAT SHLDR BELT (GRAY)	96	F (AR9, 14B)	1	16730220
11-B10	14.875	GUIDE, P/SEAT SHLDR BELT (NEUTRAL)	96-97	F87 (AR9, 522, 52B)	1	16789714
11-B10	14.875	GUIDE, P/SEAT SHLDR BELT (GRAY)	97	F67 (AR9, 10C, 14B, 73B, 103, 142)	1	16799316
11-B10	14.875	GUIDE, P/SEAT SHLDR BELT (GRAY)	97	F87 (AR9, 14B, 73B)	1	16799272
11-B10	14.875	GUIDE, P/SEAT SHLDR BELT (GRAY)	97	FP87 (AR9, 10C, 103, 142)	1	16799272
11-B10	14.875	GUIDE, P/SEAT SHLDR BELT H/RST (NEUTRAL)	98-99	F67 (AR9, AQ9, 52I)	1	16799318
11-B10	14.875	GUIDE, P/SEAT SHLDR BELT H/RST (NEUTRAL)	00-02	F67 (AR9, 522)	1	16799318
11-B10	14.875	GUIDE, P/SEAT SHLDR BELT H/RST (PEWTER)	00-02	F67 (AR9, 92B)	1	16799320
11-B10	14.875	GUIDE, P/SEAT SHLDR BELT H/RST (EBONY)	00-02	F67 (AR9, 19I)	1	16817202
11-B10	14.875	GUIDE, P/SEAT SHLDR BELT H/RST (EBONY)	00-01	F67 (AR9, 73B)	1	16817202
11-B10	14.875	GUIDE, P/SEAT SHLDR BELT H/RST (PEWTER)	00-02	F87 (AR9, 92B)	1	16799274
11-B10	14.875	GUIDE, P/SEAT SHLDR BELT H/RST (EBONY)	00-02	F87 (AR9, 19I)	1	16817200
11-B10	14.875	GUIDE, P/SEAT SHLDR BELT H/RST (EBONY)	00-01	F87 (AR9, 73B)	1	16817200
11-B10	14.875	GUIDE, P/SEAT SHLDR BELT H/RST (EBONY)	01	F87 (AQ9, 672)	1	16817200
11-B10	14.875	GUIDE, D/SEAT SHLDR BELT H/RST (NEUTRAL)	98-01	F67 (AQ9, AR9, 52I)	1	16799319
11-B10	14.875	GUIDE, D/SEAT SHLDR BELT H/RST (NEUTRAL)	98-01	F87 (AQ9, AR9, 52I)	1	16789715
11-B10	14.875	GUIDE, D/SEAT SHLDR BELT H/RST (PEWTER)	00-01	F67 (AR9, 92B)	1	16799321
11-B10	14.875	GUIDE, D/SEAT SHLDR BELT H/RST (EBONY)	00-01	F67 (AR9, 19B, 19D, 192, 194)	1	16817203
11-B10	14.875	GUIDE, D/SEAT SHLDR BELT H/RST (PEWTER)	00-01	F87 (AR9, 92B)	1	16799275
11-B10	14.875	GUIDE, D/SEAT SHLDR BELT H/RST (EBONY)	00-01	F87 (AG1, AQ9, 194)	1	16817201
11-B10	14.875	GUIDE, D/SEAT SHLDR BELT H/RST (EBONY)	00-01	F87 (AR9, 19B, 19D, 192)	1	16817201

cardiagn.com

	11-B10	14.875	GUIDE, D/SEAT SHLDR BELT H/RST (EBONY)	01	F87 (AG1, AQ9, 672)	1	16817201
	11-B10	14.875	GUIDE, P/SEAT SHLDR BELT H/RST (EBONY)	00-02	F67 (AQ9, 194) (EXPORT)	1	16817202
	11-B10	14.875	GUIDE, P/SEAT SHLDR BELT H/RST (EBONY)	00-02	F87 (AQ9, AX4, 194) (EXPORT)	1	16817200
	11-B10	14.875	GUIDE, D/SEAT SHLDR BELT H/RST (EBONY)	00-01	F67 (AG1, AQ9, 194) (EXPORT)	1	16817203
6.	11-B10	14.875	BOLT, D/SEAT SHLDR BELT GDE (M12 X 1.75 X 30)	93-02	F67 (AK5)	1	20247145
	11-B10	14.875	BOLT, D/SEAT SHLDR BELT GDE (M4.2X1.41X16) (11.573) (TO H/RST SI)	93-96	F87 (AR9)	2	16739619
	11-B10	14.875	BOLT, D/SEAT SHLDR BELT GDE (1/2X13X1.08)	94-02	F67 (AK5)	AR	10225190
	11-B10	14.875	BOLT, D/SEAT SHLDR BELT GDE (M4.2X1.41X20, NZ) (8.977)	98-02	F	2	11516665
	11-B10	14.875	BOLT, D/SEAT SHLDR BELT GDE (M4.2X1.41X35) (8.977)	99-00	F	2	11514957
	11-B10	14.875	BOLT, D/SEAT SHLDR BELT GDE (M4.2X1.41X35, 25, THD) (8.900)	01-02	F (AQ9, AR9)	2	11514940
	11-B10	14.875	BOLT, P/SEAT SHLDR BELT GDE (M12 X 1.75 X 30)	93-02	F67 (AK5)	1	20247145
	11-B10	14.875	BOLT, P/SEAT SHLDR BELT GDE (M4.2X1.41X16) (11.573) (TO H/RST SI)	93-95	F87 (AR9)	2	16739619
	11-B10	14.875	BOLT, P/SEAT SHLDR BELT GDE (1/2X13X1.08)	94-02	F67 (AK5)	AR	10225190
	11-B10	14.875	BOLT, P/SEAT SHLDR BELT GDE (M4.2X1.41X20, NZ) (8.977)	96	F87 (AR9) (EXC VE1)	2	11516665
	11-B10	14.875	BOLT, P/SEAT SHLDR BELT GDE (M4.2X1.41X16) (11.573)	96	F87 (AR9) (EXC VE1)	2	16739619
	11-B10	14.875	BOLT, P/SEAT SHLDR BELT GDE (M4.2X1.41X20, NZ) (8.977)	97	F (AR9)	2	11516665
	11-B10	14.875	BOLT, P/SEAT SHLDR BELT GDE (M4.2X1.41X35) (8.977)	98-02	F (AQ9, AR9)	2	11514957
	11-B10	14.875	BOLT, P/SEAT SHLDR BELT GDE (M4.2X1.41X20, NZ) (8.977)	00-02	F (AR9)	2	11516665
7.		DISCON	COVER, D/SEAT BK CUSH LAT SUPT FIN (BLACK)	93	F	1	16729493
	11-N17	11.390	COVER, D/SEAT BK CUSH LAT SUPT FIN (BLACK) (11.377)	94-02	F	1	16748381
		DISCON	COVER, P/SEAT BK CUSH PIV FIN (BLACK) (11.375)	93	F	1	16729493
	11-N14	11.375	COVER, P/SEAT BK CUSH PIV FIN (BLACK) (11.377)	94-02	F	1	16748381
8.	11-N14	11.375	PIN, D/SEAT BK CUSH PIV (PART OF 4)	93-98	F (AR9)	AR	20038513
	11-N14	11.375	PIN, P/SEAT BK FRM INR HGE (PART OF 4)	93-98	F (AR9)	AR	20038513
9.	11-C11	14.890	PAD, D/SEAT CUSH (W/WIRE) (USE W/TRIM CODES ENDING IN B, C)	93	F (AR9, AH3)	1	16729505
	11-C11	14.890	PAD, D/SEAT CUSH (W/WIRE) (USE W/TRIM CODES ENDING IN B, C)	93-94	F (AC3, AR9)	1	17008772

cardiagn.com

	11-C11	14.890	PAD, D/SEAT CUSH (W/WIRE) (USE W/TRIM CODES ENDING IN B, 2)	94-96	F (AR9, AH3)	1	16729505
	11-C11	14.890	PAD, D/SEAT CUSH (W/WIRE) (USE W/TRIM CODES ENDING IN B, C, 2)	95-96	F (AG1, AR9)	1	17908772
	11-C11	14.890	PAD, D/SEAT CUSH (W/WIRE) (USE W/TRIM CODES ENDING IN B, 2)	95-96	F87 (AG4, AR9)	1	16729505
	11-C11	14.890	PAD, D/SEAT CUSH (W/WIRE) (USE W/TRIM CODES ENDING IN B, C)	93	F (AR9, AH3)	1	16729505
	11-C11	14.890	PAD, D/SEAT CUSH (W/WIRE) (USE W/TRIM CODES ENDING IN B, C)	93-94	F (AC3, AR9)	1	17908772
	11-C11	14.890	PAD, D/SEAT CUSH (W/WIRE) (USE W/TRIM CODES ENDING IN B, 2)	94-06	F (AR9, AH3)	1	16729505
	11-C11	14.890	PAD, D/SEAT CUSH (W/WIRE) (USE W/TRIM CODES ENDING IN B, C, 2)	95-96	F (AG1, AR9)	1	17908772
	11-C11	14.890	PAD, D/SEAT CUSH (W/WIRE) (USE W/TRIM CODES ENDING IN B, 2)	95-96	F87 (AG4, AR9)	1	16729505
	11-C11	14.890	PAD, P/SEAT CUSH (USE W/TRIM CODE ENDING IN 4)	98-02	F67 (AQ9)	1	16794382
	11-C11	14.890	PAD, P/SEAT CUSH (USE W/TRIM CODE ENDING IN 4)	99-02	F87 (AQ9, AX4)	1	16794382
	11-C11	14.890	PAD, P/SEAT CUSH (USE W/TRIM CODES ENDING IN B, C)	93	F (AR9)	1	16729505
	11-C11	14.890	PAD, P/SEAT CUSH (USE W/TRIM CODES ENDING IN B, 2)	94-96	F (AR9)	1	16729505
	11-C11	14.890	PAD, P/SEAT CUSH (USE W/TRIM CODES ENDING IN B, C, 2, 3)	97	F (AR9)	1	16795501
	11-C11	14.890	PAD, P/SEAT CUSH (USE W/TRIM CODES ENDING IN B, 2)	98-01	F (AR9)	1	16795501
	11-C11	14.890	PAD, P/SEAT CUSH (USE W/TRIM CODES ENDING IN B, 2, 3)	02	F (AR9)	1	16795501
	11-C11	14.890	PAD, P/SEAT CUSH (W/WIRE, USE W/TRIM CODES ENDING IN 3, B, D)	98-02	F (AR9)	1	16729508
	11-C11	14.890	PAD, P/SEAT CUSH (USE W/TRIM CODE ENDING IN 4)	98	F87 (AQ9, AX4) (EXPORT)	1	16794382
10.	11-N18	11.419	SPRING, D/SEAT CUSH PAD SUPT WIRE	93-02	F	1	16711310
	11-N18	11.419	SPRING, P/SEAT CUSH PAD SUPT WIRE	93-02	F	1	16711310
11.	11-N14	11.375	BUSHING, D/SEAT BK CUSH PIV (HGE)	94-02	F (AR9)	1	16728198
		DISCON	BUSHING, D/SEAT BK CUSH PIV (HGE) (NYLON)	93	F (AR9)	1	17913555
	11-N14	11.375	BUSHING, P/SEAT BK CUSH PIV (HGE)	94-01	F (AR9)	1	16728198
	11-N14	11.375	BUSHING, P/SEAT BK CUSH PIV (HGE)	99-02	F (AQ9)	1	16728198

cardiagn.com

		DISCON	BUSHING, P/SEAT BK CUSH PIV (HGE) (NYLON)	93	F (AR9)	1	17913555
12.	11-N18	11.419	FRAME, D/SEAT CUSH (W/O FRT THIGH SUPT)	93-02	F	1	16718660
	11-N18	11.419	FRAME, P/SEAT CUSH (W/O FRT THIGH SUPT)	93-02	F	1	16718669
13.	11-N15	11.377	RECLINER, D/SEAT (BLACK)	98	F67 (AG1, AQ9)	1	16806729
	11-N15	11.377	RECLINER, D/SEAT (BLACK)	98	F87 (AQ9)	1	16805461
	11-N15	11.377	RECLINER, D/SEAT (BLACK)	02	F87 (AR9)	1	16779871
	11-N15	11.377	RECLINER, D/SEAT (USE W/TRIM CODE ENDING IN B) (BLACK)	97	F87 (AG4, AR9)	1	16779871
	11-N15	11.377	RECLINER, D/SEAT (USE W/TRIM CODE ENDING IN 4) (BLACK)	98-02	F67 (AQ9)	1	16806731
	11-N15	11.377	RECLINER, D/SEAT (USE W/TRIM CODE ENDING IN 4) (BLACK)	98-02	F87 (AG1, AQ9)	1	16779871
	11-N15	11.377	RECLINER, D/SEAT (USE W/TRIM CODES ENDING IN B, C, 2) (BLACK)	93-96	F87 (AR9)	1	16779871
	11-N15	11.377	RECLINER, D/SEAT (USE W/TRIM CODES ENDING IN B, 2) (BLACK)	94-96	F67 (AR9)	1	16779871
	11-N15	11.377	RECLINER, D/SEAT (USE W/TRIM CODES ENDING IN B, 2) (BLACK)	94	F87 (AR9)	1	16779871
	11-N15	11.377	RECLINER, D/SEAT (USE W/TRIM CODES ENDING IN B, C, 2, 3) (BLACK)	97	F67 (AG1, AR9)	1	16806731
	11-N15	11.377	RECLINER, D/SEAT (USE W/TRIM CODES ENDING IN B, 2) (BLACK)	97	F67 (AH3, AR9)	1	16806731
	11-N15	11.377	RECLINER, D/SEAT (USE W/TRIM CODES ENDING IN B, C, 2, 3) (BLACK)	97	F87 (AG1, AR9)	1	16779871
	11-N15	11.377	RECLINER, D/SEAT (USE W/TRIM CODES ENDING IN B, 2) (BLACK)	97	F87 (AH3, AR9)	1	16779871
	11-N15	11.377	RECLINER, D/SEAT (USE W/TRIM CODES ENDING IN B, D, 2) (BLACK)	98-99	F67 (AG1, AR9)	1	16806731
	11-N15	11.377	RECLINER, D/SEAT (USE W/TRIM CODES ENDING IN B, D, 2) (BLACK)	98-99	F67 (AH3, AR9)	1	16806731
	11-N15	11.377	RECLINER, D/SEAT (USE W/TRIM CODES ENDING IN B, D, 2) (BLACK)	98-02	F87 (AG1, AR9)	1	16779871
	11-N15	11.377	RECLINER, D/SEAT (USE W/TRIM CODES ENDING IN B, D, 2) (BLACK)	98-99	F87 (AH3, AR9)	1	16779871
	11-N15	11.377	RECLINER, D/SEAT (USE W/TRIM CODES ENDING IN B, D, 2) (BLACK)	00-02	F67 (AR9)	1	16806731
	11-N15	11.377	RECLINER, P/SEAT (BLACK) (INCLUDES HANDLES)	97	F67 (AR9)	1	16805462

cardiagn.com

	11-N15	11.377	**RECLINER**, P/SEAT (USE W/TRIM CODE ENDING IN B, 2) (BLACK) (INCLUDES HANDLES) .	93-96	F67 (AR9)	1	16805462
	11-N15	11.377	**RECLINER**, P/SEAT (USE W/TRIM CODE ENDING IN 4) (BLACK)	98-02	F67 (AQ9)	1	16806730
	11-N15	11.377	**RECLINER**, P/SEAT (USE W/TRIM CODES ENDING IN B, 2) (BLACK) (INCLUDES HANDLES) .	93-96	F87 (AR9)	1	16805462
	11-N15	11.377	**RECLINER**, P/SEAT (USE W/TRIM CODES ENDING IN C, 2, 3) (BLACK)	97	F67 (AR9)	1	16806730
	11-N15	11.377	**RECLINER**, P/SEAT (USE W/TRIM CODES ENDING IN B, C, 2, 3) (BLACK) (INCLUDES HANDLES)	97	F87 (AR9)	1	16805462
	11-N15	11.377	**RECLINER**, P/SEAT (USE W/TRIM CODES ENDING IN B, D, 2) (BLACK)	98-02	F67 (AR9)	1	16806730
	11-N15	11.377	**RECLINER**, P/SEAT (USE W/TRIM CODES ENDING IN 2, B, D) (BLACK) (INCLUDES HANDLES)	98-99	F87 (AR9)	1	16805462
	11-N15	11.377	**RECLINER**, P/SEAT (USE W/TRIM CODES ENDING IN D, 2) (BLACK) (INCLUDES HANDLES) .	00-01	F87 (AR9)	1	16805462
	11-N15	11.377	**RECLINER**, P/SEAT (USE W/TRIM CODES ENDING IN B, D, 2, 3) (BLACK) (INCLUDES HANDLES)	02	F87 (AR9)	1	16805462
	11-N15	11.377	**RECLINER**, P/SEAT (USE W/TRIM CODE ENDING IN 4) (BLACK) (INCLUDES HANDLES) .	98-02	F87 (AQ9, AX4) (EXPORT)	1	16805462
14.	11-N17	11.390	**KNOB**, D/SEAT BK CUSH LAT REL (EBONY)	93-96	F (AR9)	1	20513435
	11-N17	11.390	**KNOB**, D/SEAT BK CUSH LAT REL (GRAPHITE) (KNOB IS INTR BODY COLOR)	94-96	F (AR9, 122)	1	16740053
	11-N17	11.390	**KNOB**, D/SEAT BK CUSH LAT REL (NEUTRAL)	96-97	F (AG1, AR9, AH3)	1	16789709
	11-N17	11.390	**KNOB**, D/SEAT BK CUSH LAT REL (GRAY)	97	F (AR9)	1	16799775
	11-N17	11.390	**KNOB**, D/SEAT BK CUSH LAT REL (NEUTRAL)	98-02	F (AQ9, AR9, 521)	1	16789709
	11-N17	11.390	**KNOB**, D/SEAT BK CUSH LAT REL (GRAY)	98-99	F (AQ9, AR9)	1	16799775
	11-N17	11.390	**KNOB**, D/SEAT BK CUSH LAT REL (EBONY)	98-99	F (AR9)	1	20513435
	11-N17	11.390	**KNOB**, D/SEAT BK CUSH LAT REL (EBONY)	00-02	F (AG1, AQ9)	1	16817199
	11-N17	11.390	**KNOB**, D/SEAT BK CUSH LAT REL (EBONY)	00-02	F (AR9)	1	16817199
	11-N17	11.390	**KNOB**, D/SEAT BK CUSH LAT REL (EBONY)	00-02	F (AR9, 19D)	1	20513435
	11-N17	11.390	**KNOB**, P/SEAT BK CUSH LAT REL (EBONY)	93-96	F (AR9)	1	20513435

cardiagn.com

	11-N17	11.390	**KNOB**, P/SEAT BK CUSH LAT REL (GRAPHITE) (KNOB IS INTR BODY COLOR)	96	F (AR9, 122)	1	16740052
	11-N17	11.390	**KNOB**, P/SEAT BK CUSH LAT REL (NEUTRAL)	96-99	F (AR9, 522, 523)	1	16769708
	11-N17	11.390	**KNOB**, P/SEAT BK CUSH LAT REL (GRAY)	97-99	F (AR9)	1	16799774
	11-N17	11.390	**KNOB**, P/SEAT BK CUSH LAT REL (NEUTRAL)	98-99	F (AQ9, AR9, 522, 524, 52B)	1	16789708
	11-N17	11.390	**KNOB**, P/SEAT BK CUSH LAT REL (EBONY)	98-99	F (AR9)	1	20513435
	11-N17	11.390	**KNOB**, P/SEAT BK CUSH LAT REL (EBONY)	00-02	F (AR9, 19D)	1	20513435
	11-N17	11.390	**KNOB**, P/SEAT BK CUSH LAT REL (NEUTRAL)	00-02	F67 (AR9, AQ9, 52I) ...	1	16789708
	11-N17	11.390	**KNOB**, P/SEAT BK CUSH LAT REL (EBONY)	00-02	F67 (AR9, AQ9)	1	16817198
	11-N17	11.390	**KNOB**, P/SEAT BK CUSH LAT REL (NEUTRAL)	00-02	F87 (AR9, AQ9, AX4, 52I) (EXPORT)	1	16789708
	11-N17	11.390	**KNOB**, P/SEAT BK CUSH LAT REL (EBONY)	00-02	F87 (AR9, AQ9, AX4) (EXPORT)	1	16817198
15.		8.900	**SCREW**, M8X1.25X56.50, TAPPING, CAPTIVE PT (D/SEAT RECL TR CVR) (3.704)	93-02	.....	3	10095393
		8.900	**SCREW**, M8X1.25X56.50, TAPPING, CAPTIVE PT (P/SEAT RECL TR CVR) (3.704)	93-02	.....	3	10095393
16.	11-N15	11.377	**COVER**, D/SEAT RECL FIN (BEIGE)	93-95	F (AH3, AR9, 64B)	1	16622507
	11-N15	11.377	**COVER**, D/SEAT RECL FIN (BEIGE)	94	F (AR9, 64B, 642)	1	16622507
	11-N15	11.377	**COVER**, D/SEAT RECL FIN (BEIGE)	95	F (AH3, AR9, 642)	1	16622507
	11-N15	11.377	**COVER**, D/SEAT RECL FIN (SMALL PORK CHOP CVR WHICH ONLY CVRS RECL ON SI OF SEAT BY HINGE AREA) (GRAPHITE)	93	F (AH3, AR9, 12B, 14B)	1	22568922
	11-N15	11.377	**COVER**, D/SEAT RECL FIN (SMALL PORK CHOP CVR WHICH ONLY CVRS RECL ON SI OF SEAT BY HINGE AREA) (GRAPHITE)	94-95	F (AH3, AR9, 12B, 14B, 73B, 122)	1	22568922
	11-N15	11.377	**COVER**, D/SEAT RECL FIN (SMALL PORK CHOP CVR WHICH ONLY CVRS RECL ON SI OF SEAT BY HINGE AREA) (GRAPHITE)	95	F (AH3, AR9, 122)	1	22568922
	11-N19	11.573	**COVER**, D/SEAT OTR ADJR FIN (SEE ADJUSTER ASM/SEAT POWER 6-WAY (AC3) ILLUSTRATED IN GROUP 11.000 FOR DETAILS.)	93-96	F (AC3, AR9)	1	
	11-N15	11.377	**COVER**, P/SEAT RECL FIN (BEIGE)	93-95	F (AR9, 64B)	1	16622506

cardiagn.com

	11-N15	11.377	**COVER**, P/SEAT RECL FIN (GRAPHITE) (RECL CVR COVERS ONLY RECL "PORK CHOP" LOOK)	93	F (AR9, 12B, 12C, 14B)	1	22568921
	11-N15	11.377	**COVER**, P/SEAT RECL FIN (GRAPHITE) (RECL CVR COVERS ONLY RECL "PORK CHOP" LOOK)	94-96	F (AR9, 12B, 14B, 73B)	1	22568921
	11-N15	11.377	**COVER**, P/SEAT RECL FIN (BEIGE)	95	F (AR9, 642)	1	16622506
	11-N15	11.377	**COVER**, P/SEAT RECL FIN (GRAPHITE) (RECL CVR COVERS ONLY RECL "PORK CHOP" LOOK)	95-96	F (AR9, 122)	1	22568921
	11-N15	11.377	**COVER**, P/SEAT RECL FIN (NEUTRAL) (RECL CVR COVERS ONLY RECL "PORK CHOP" LOOK) (11.558)	96-99	F (AR9, 522, 52B, 52D) .	1	16793584
	11-N15	11.377	**COVER**, P/SEAT RECL FIN (GRAY)	96	F (AR9, 14B)	1	22575621
	11-N15	11.377	**COVER**, P/SEAT RECL FIN (GRAY) (11.558)	97-99	F (AR9)	1	16799266
	11-N15	11.377	**COVER**, P/SEAT RECL FIN (PEWTER) (11.558)	97-99	F (AR9)	1	16799270
	11-N15	11.377	**COVER**, P/SEAT RECL FIN (NEUTRAL) (RECL CVR COVERS ONLY RECL "PORK CHOP" LOOK) (11.558)	00-01	F (AR9, 52B, 522)	1	16793584
	11-N15	11.377	**COVER**, P/SEAT RECL FIN (PEWTER) (11.558)	00-02	F (AR9, 92B)	1	16799270
	11-N15	11.377	**COVER**, P/SEAT RECL FIN (EBONY)	00-01	F (AR9, 19B, 19D, 73B, 192)	1	16817196
	11-N15	11.377	**COVER**, P/SEAT RECL FIN (NEUTRAL) (RECL CVR COVERS ONLY RECL "PORK CHOP" LOOK) (11.558)	02	F (AR9, 522)	1	16793584
	11-N15	11.377	**COVER**, P/SEAT RECL FIN (EBONY)	02	F (AR9, 19B, 19D, 192, 193)	1	16817196
17.		8.977	**SCREW-OVAL**, M4.2X1.41X35 TAP, 9.2 OD, C/R, 6172M, NZ (D/SEAT RECL LWR FIN CVR BRKT)	93-02	F (AR9)	2	11514957
18.		8.900	**BOLT**, HWH, M8X1.25X40, SPL FULLTHD, AC PT, 10.9 PZOR (D/SEAT RECL TR CVR)	93-02	.....	1	11515758
		8.900	**BOLT**, HWH, M8X1.25X40, SPL FULLTHD, AC PT, 10.9 PZOR (P/SEAT RECL TR CVR)	93-02	.....	1	11515758
19.		N.S.	**ADJUSTER**, D/SEAT (SEE ADJUSTER ASM/SEAT ILLUSTRATED IN GROUP 11.000 FOR DETAILS.)		.....		
		N.S.	**ADJUSTER**, P/SEAT (*3)		.....		
20.		8.900	**BOLT**, HWH, M8X1.25X40, SPL FULLTHD, AC PT, 10.9 PZOR (D/SEAT ADJR)	93-02	.....	4	11515758

cardiagn.com

		8.900	BOLT, HWH, M8X1.25X40, SPL FULLTHD, AC PT, 10.9 PZOR (P/SEAT ADJR)	93-02		4	11515758
21.	11-N18	11.419	WIRE, D/SEAT CUSH PAD (SUSP HNGR)	93-02	F	1	16711243
	11-N18	11.419	WIRE, P/SEAT CUSH PAD (SUSP HNGR)	93-02	F	1	16711243
22.	11-C7	14.880	COVER, D/SEAT CUSH (GRAPHITE)	93	F (AR9, 12B, 14B)	1	16730229
		DISCON	COVER, D/SEAT CUSH (BEIGE)	93	F (AR9, AH3, AC3, 64B)	1	16730230
	11-C7	14.880	COVER, D/SEAT CUSH (GRAPHITE)	93	F87 (AR9, 12C)	1	16740061
	11-C7	14.880	COVER, D/SEAT CUSH (GRAPHITE) (W/TATUM CPT INDR/OUTDR LOOK, VIN ENDS W/R2184571)	94	F (AR9, 12B, 14B) (1ST DES)	1	16730229
		DISCON	COVER, D/SEAT CUSH (BEIGE) (W/TATUM CPT INDR/OUTDR LOOK, VIN ENDS W/R2184571)	94	F (AR9, AH3, AC3, 64B) (1ST DES)	1	16730230
		DISCON	COVER, D/SEAT CUSH (RED) (W/TATUM CPT INDR/OUTDR LOOK, W/VIN R2184571 & PRIOR)	94	F (AC3, AH3, AR9, 73B) (1ST DES)	1	16748717
	11-C7	14.880	COVER, D/SEAT CUSH (GRAPHITE)	94-96	F (AR9, 122)	1	16778855
		DISCON	COVER, D/SEAT CUSH (BEIGE)	94-95	F (AR9, 642)	1	16778856
	11-C7	14.880	COVER, D/SEAT CUSH (GRAY) (W/TARA CPT CARPET-LIKE LOOK, VIN BEGINS W/R2184572)	94	F (AR9, 12B, 14B) (2ND DES)	1	16779400
		DISCON	COVER, D/SEAT CUSH (BEIGE) (W/TARA CPT CARPET-LIKE LOOK, VIN BEGINS W/R2184572)	94	F (AR9, 64B) (2ND DES)	1	16780026
	11-C7	14.880	COVER, D/SEAT CUSH (RED) (W/TARA CPT CARPET-LIKE LOOK, VIN R2184572 & AFTER)	94	F (AC3, AH3, AR9, 73B) (2ND DES)	1	16780027
		DISCON	COVER, D/SEAT CUSH (BEIGE)	95	F (AG1, AH3, AR9, 64B)	1	16730230
		DISCON	COVER, D/SEAT CUSH (RED)	95	F (AG1, AH3, AR9, 73B)	1	16748717
	11-C7	14.880	COVER, D/SEAT CUSH (GRAY)	95	F (AR9, 12B, 14B)	1	16779400
		DISCON	COVER, D/SEAT CUSH (BEIGE)	95	F (AR9, 64B)	1	16780026
	11-C7	14.880	COVER, D/SEAT CUSH (RED)	95	F (AC3, AH3, AR9, 73B)	1	16780027
		DISCON	COVER, D/SEAT CUSH (BEIGE)	95	F87 (AG4, AR9, 64B)	1	16780026
	11-C7	14.880	COVER, D/SEAT CUSH (RED)	95	F87 (AG4, AR9, 73B)	1	16780027
	11-C7	14.880	COVER, D/SEAT CUSH (GRAPHITE)	96	F (AH3, AR9, AG1, AG4, 12B)	1	16789187
		DISCON	COVER, D/SEAT CUSH (GRAY)	96	F (AH3, AR9, AG1, AG4, 14B)	1	16789188
	11-C7	14.880	COVER, D/SEAT CUSH (NEUTRAL)	96	F (AH3, AG1, AR9, AH3 AG4, 52B)	1	16789189
	11-C7	14.880	COVER, D/SEAT CUSH (RED)	96	F (AH3, AR9, AG1, AG4, 73B)	1	16789190
	11-C7	14.880	COVER, D/SEAT CUSH (NEUTRAL)	96	F (AR9, 522)	1	16789209
	11-C7	14.880	COVER, D/SEAT CUSH (PEWTER)	97	F (AG1, AH3, AG4, AR9, 92B)	1	16795361
	11-C7	14.880	COVER, D/SEAT CUSH (GRAY)	97	F (AG1, AG4, AH3, AR9, 14B)	1	16795362
	11-C7	14.880	COVER, D/SEAT CUSH (NEUTRAL)	97	F (AG1, AG4, AH3, AR9, 52B)	1	16795363

cardiagn.com

11-C7	14.880	COVER, D/SEAT CUSH (RED) ...	97	F (AG1, AG4, AH3, AR9, 73B)	1	16795364
11-C7	14.880	COVER, D/SEAT CUSH (GRAY) ..	97	F (AG1, AH3, AR9, 142)	1	16795366
11-C7	14.880	COVER, D/SEAT CUSH (NEUTRAL)	97	F (AR9, 522)	1	16795367
11-C7	14.880	COVER, D/SEAT CUSH (WHITE) .	97	F (AR9, 103)	1	16795368
11-C7	14.880	COVER, D/SEAT CUSH (WHITE) .	97	F (AR9, 10C)	1	16799229
11-C7	14.880	COVER, D/SEAT CUSH (GRAPHITE)	98-99	F (AR9, 14B)	1	16813461
11-C7	14.880	COVER, D/SEAT CUSH (NEUTRAL)	98-99	F (AG1, AR9, 52B)	1	16813462
11-C7	14.880	COVER, D/SEAT CUSH (NEUTRAL)	98-99	F (AH3, AR9, 52B)	1	16813462
11-C7	14.880	COVER, D/SEAT CUSH (RED) ...	98-99	F (AG1, AH3, AR9, 73B)	1	16813463
11-C7	14.880	COVER, D/SEAT CUSH (GRAY) ..	98-99	F (AG1, AH3, AR9, 14D)	1	16813469
11-C7	14.880	COVER, D/SEAT CUSH (NEUTRAL)	98-99	F (AG1, AH3, AR9, 52D)	1	16813470
11-C7	14.880	COVER, D/SEAT CUSH (WHITE) .	98-99	F (AG1, AH3, AR9, 102)	1	16813473
11-C7	14.880	COVER, D/SEAT CUSH (GRAY) ..	98-99	F (AG1, AH3, AR9, 142)	1	16813474
11-C7	14.880	COVER, D/SEAT CUSH (NEUTRAL)	98-99	F (AG1, AH3, AR9, 522)	1	16813475
11-C7	14.080	COVER, D/SEAT CUSH (GRAY) ..	98-98	F (AG1, AQ9, 144)	1	16813655
11-C7	14.880	COVER, D/SEAT CUSH (NEUTRAL)	98-02	F (AG1, AQ9, 524)	1	16813656
11-C7	14.880	COVER, D/SEAT CUSH (NEUTRAL)	00-02	F (AR9, 522)	1	16813475
11-C7	14.880	COVER, D/SEAT CUSH (EBONY)	00-02	F (AR9, 19B)	1	16837684
11-C7	14.880	COVER, D/SEAT CUSH (NEUTRAL)	00	F (AR9, 52B)	1	16837685
11-C7	14.880	COVER, D/SEAT CUSH (RED) ...	00-02	F (AR9, 73B)	1	16837686
11-C7	14.880	COVER, D/SEAT CUSH (PEWTER)	00-02	F (AR9, 92B)	1	16837687
11-C7	14.880	COVER, D/SEAT CUSH (EBONY)	00-02	F (AR9, 192)	1	16837698
11-C7	14.880	COVER, D/SEAT CUSH (EBONY)	00-02	F (AR9, 19D)	1	16837704
11-C7	14.880	COVER, D/SEAT CUSH (EBONY)	00-02	F (AG1, AQ9, 194)	1	16837705
11-C7	14.880	COVER, D/SEAT CUSH (EBONY)	02	F (AG1, AR9, 193)	1	88089203
11-C7	14.880	COVER, P/SEAT CUSH (GRAPHITE)	93	F (AR9, 12B, 14B)	1	16730229
	DISCON	COVER, P/SEAT CUSH (BEIGE) .	93	F (AR9, 64B)	1	16730230
11-C7	14.880	COVER, P/SEAT CUSH (GRAPHITE)	93	F87 (AR9, 12C)	1	16740060
11-C7	14.880	COVER, P/SEAT CUSH (GRAPHITE) (W/TATUM CPT INDR/OUTDR LOOK, VIN ENDS W/R2184571)	94	F (AR9, 12B, 14B) (1ST DES)	1	16730229
	DISCON	COVER, P/SEAT CUSH (BEIGE) (W/TATUM CPT INDR/OUTDR LOOK, VIN ENDS W/R2184571) ..	94	F (AR9, 64B) (1ST DES)	1	16730230
	DISCON	COVER, P/SEAT CUSH (RED) (W/TATUM CPT INDR/OUTDR LOOK, W/VIN R1284571 & PRIOR)	94	F (AR9, 73B) (1ST DES)	1	16748717
11-C7	14.880	COVER, P/SEAT CUSH (GRAPHITE)	94-96	F (AR9, 122)	1	16778855
	DISCON	COVER, P/SEAT CUSH (BEIGE) .	94-95	F (AR9, 642)	1	16778856

cardiagn.com

11-C7	14.880	COVER, P/SEAT CUSH (GRAY) (W/TARA CPT CARPET-LIKE LOOK, VIN BEGINS W/R2184572)	94	F (AR9, 12B, 14B) (2ND DES)	1	16779400
	DISCON	COVER, P/SEAT CUSH (BEIGE) (W/TARA CPT CARPET-LIKE LOOK, VIN BEGINS W/R2184572)	94	F (AR9, 64B) (2ND DES)	1	16780026
11-C7	14.880	COVER, P/SEAT CUSH (RED) (W/TARA CPT CARPET-LIKE LOOK, VIN R2184572 & AFTER)	94	F (AR9, 73B) (2ND DES)	1	16780027
11-C7	14.880	COVER, P/SEAT CUSH (GRAY)	95	F (AR9, 12B, 14B)	1	16779400
	DISCON	COVER, P/SEAT CUSH (BEIGE)	95	F (AR9, 64B)	1	16780026
11-C7	14.880	COVER, P/SEAT CUSH (RED)	95	F (AR9, 73B)	1	16780027
11-C7	14.880	COVER, P/SEAT CUSH (GRAPHITE)	96	F (AR9, 12B)	1	16789187
	DISCON	COVER, P/SEAT CUSH (GRAY)	96	F (AR9, 14B)	1	16789188
11-C7	14.880	COVER, P/SEAT CUSH (NEUTRAL)	96	F (AR9, 52B)	1	16789189
11-C7	14.880	COVER, P/SEAT CUSH (RED)	96	F (AR9, 73B)	1	16789190
11-C7	14.880	COVER, P/SEAT CUSH (NEUTRAL)	96	F (AR9, 522)	1	16789209
11-C7	14.880	COVER, P/SEAT CUSH (PEWTER)	97	F (AR9, 92B)	1	16795361
11-C7	14.880	COVER, P/SEAT CUSH (GRAY)	97	F (AR9, 14B)	1	16795362
11-C7	14.880	COVER, P/SEAT CUSH (NEUTRAL)	97	F (AR9, 52B)	1	16795363
11-C7	14.880	COVER, P/SEAT CUSH (RED)	97	F (AR9, 73B)	1	16795364
11-C7	14.880	COVER, P/SEAT CUSH (GRAY)	97	F (AR9, 142)	1	16795366
11-C7	14.880	COVER, P/SEAT CUSH (NEUTRAL)	97	F (AR9, 522)	1	16795367
11-C7	14.880	COVER, P/SEAT CUSH (WHITE)	97	F (AR9, 103)	1	16795368
11-C7	14.880	COVER, P/SEAT CUSH (WHITE)	97	F (AR9, 10C)	1	16799229
11-C7	14.880	COVER, P/SEAT CUSH (GRAPHITE)	98-99	F (AR9, 14B)	1	16813461
11-C7	14.880	COVER, P/SEAT CUSH (NEUTRAL)	98-99	F (AR9, 52B)	1	16813462
11-C7	14.880	COVER, P/SEAT CUSH (RED)	98-99	F (AR9, 73B)	1	16813463
11-C7	14.880	COVER, P/SEAT CUSH (GRAY)	98-99	F (AR9, 14D)	1	16813469
11-C7	14.880	COVER, P/SEAT CUSH (NEUTRAL)	98-99	F (AR9, 52D)	1	16813470
11-C7	14.880	COVER, P/SEAT CUSH (WHITE)	98-99	F (AR9, 102)	1	16813473
11-C7	14.880	COVER, P/SEAT CUSH (GRAY)	98-99	F (AR9, 142)	1	16813474
11-C7	14.880	COVER, P/SEAT CUSH (NEUTRAL)	98-02	F (AR9, 522)	1	16813475
11-C7	14.880	COVER, P/SEAT CUSH (NEUTRAL)	98-02	FP67 (AQ9, 524)	1	16813656
11-C7	14.880	COVER, P/SEAT CUSH (EBONY)	00-02	F (AR9, 19B)	1	16837684
11-C7	14.880	COVER, P/SEAT CUSH (NEUTRAL)	00	F (AR9, 52B)	1	16837685
11-C7	14.880	COVER, P/SEAT CUSH (RED)	00-02	F (AR9, 73B)	1	16837686
11-C7	14.880	COVER, P/SEAT CUSH (PEWTER)	00-02	F (AR9, 92B)	1	16837687
11-C7	14.880	COVER, P/SEAT CUSH (EBONY)	00-02	F (AR9, 192)	1	16837698
11-C7	14.880	COVER, P/SEAT CUSH (EBONY)	00-02	F (AR9, 19D)	1	16837704
11-C7	14.880	COVER, P/SEAT CUSH (EBONY)	00-02	F67 (AQ9, 194)	1	16837705
11-C7	14.880	COVER, P/SEAT CUSH (EBONY)	02	F (AR9, 193)	1	88899203
11-C7	14.880	COVER, P/SEAT CUSH (GRAY)	98-99	F (AX4, AQ9, 144) (EXPORT)	1	16813655

cardiagn.com

11-C7	14.880	COVER, P/SEAT CUSH (NEUTRAL)	98-02	FP87 (AQ9, AX4, 524) (EXPORT)	1	16813656
11-C7	14.880	COVER, P/SEAT CUSH (EBONY)	00-02	F87 (AQ9, AX4, 194) (EXPORT)	1	16837705

NOTE 1: FOR AVAILABILITY OF COMPLETE FRONT SEATS CONTACT GMSPO PARTECH. VIN AND TRIM CODE OF VEHICLE MUST BE PROVIDED.
NOTE 3: SEE ADJUSTER ASM/SEAT IN GROUP 11.000 FOR DETAILS.

RPO DEFINITIONS

AC3 – ADJUSTER,SEAT,6-WAY POWER,BUCKET,DRIVER
AG1 – ADJUSTER,SEAT,6-WAY POWER,DRIVER(60-40)(VAR 2)
AG4 – ADJUSTER,MANUAL,2 WAY,VERT,DRIVER
AH3 – ADJUSTER,SEAT,4-WAY MANUAL,DRIVER
AK5 – RESTRAINT SYSTEM,FRONT SEAT,INFLATABLE,DRIVER AND PASSENGER
AN3 – SEAT,FRONT BUCKET,DRIVER,PASSENGER WITH ELECTRONIC BODY SUPPORT CONTROL
AQ9 – SEAT,FRONT BUCKET,DRIVER,PASSENGER,RECLINING
AR9 – SEAT,FRONT BUCKET,DRIVER,PASSENGER,MANUAL RECLINING(EUROPEAN STYLE)
AX4 – RESTRAINT SYSTEM,FRONT AND REAR SEAT,MANUAL(EUROPEAN)
VE1 – PROVISION OPTIONS,JAPAN(EXPORT)
10C – TRIM COMBINATION CLOTH, ARCTIC WHITE (97)
102 – TRIM COMBINATION LEATHER, ARCTIC WHITE (2) (94)
103 – TRIM COMBINATION– LEATHER,ARCTIC WHITE
12B – TRIM COMBINATION CLOTH, GRAPHITE (B) (92)
12C – TRIM COMBINATION CLOTH, GRAPHITE (C) (92)
12I – INTERIOR TRIM GRAPHITE
122 – TRIM COMBINATION LEATHER,GRAPHITE
14B – TRIM COMBINATION – CLOTH, DK GRAY
14D – TRIM COMBINATION CLOTH, LT GRAY
14I – INTERIOR TRIM LT GRAY
142 – TRIM COMBINATION LEATHER, LT GRAY
144 – TRIM COMBINATION LEATHER, LT GRAY
19B – TRIM COMBINATION,CLOTH,BLACK
19D – TRIM COMBINATION,CLOTH,BLACK
19I – INTERIOR TRIM,BLACK
192 – TRIM COMBINATION,BLACK LEATHER
193 – TRIM COMBINATION,BLACK LEATHER
194 – TRIM COMBINATION,BLACK LEATHER
52B – TRIM COMBINATION CLOTH, LT NEUTRAL
52D – TRIM COMBINATION CLOTH, NEUTRAL
52I – INTERIOR TRIM LIGHT NEUTRAL
522 – TRIM COMBINATION – LEATHER, NEUTRAL
523 – TRIM COMBINATION LEATHER, LT NEUTRAL (3) (92)
524 – TRIM COMBINATION LEATHER, NEUTRAL
64B – TRIM COMBINATION CLOTH, LT BEIGE
64I – INTERIOR TRIM,LIGHT BEIGE
642 – TRIM COMBINATION LEATHER, LT BEIGE
672 – TRIM COMBINATION,LEATHER,OAK
73B – TRIM COMBINATION,CLOTH,FLAME RED
73I – INTERIOR TRIM,FLAME RED
92B – TRIM COMBINATION CLOTH, SHALE/PEWTER

cardiagn.com

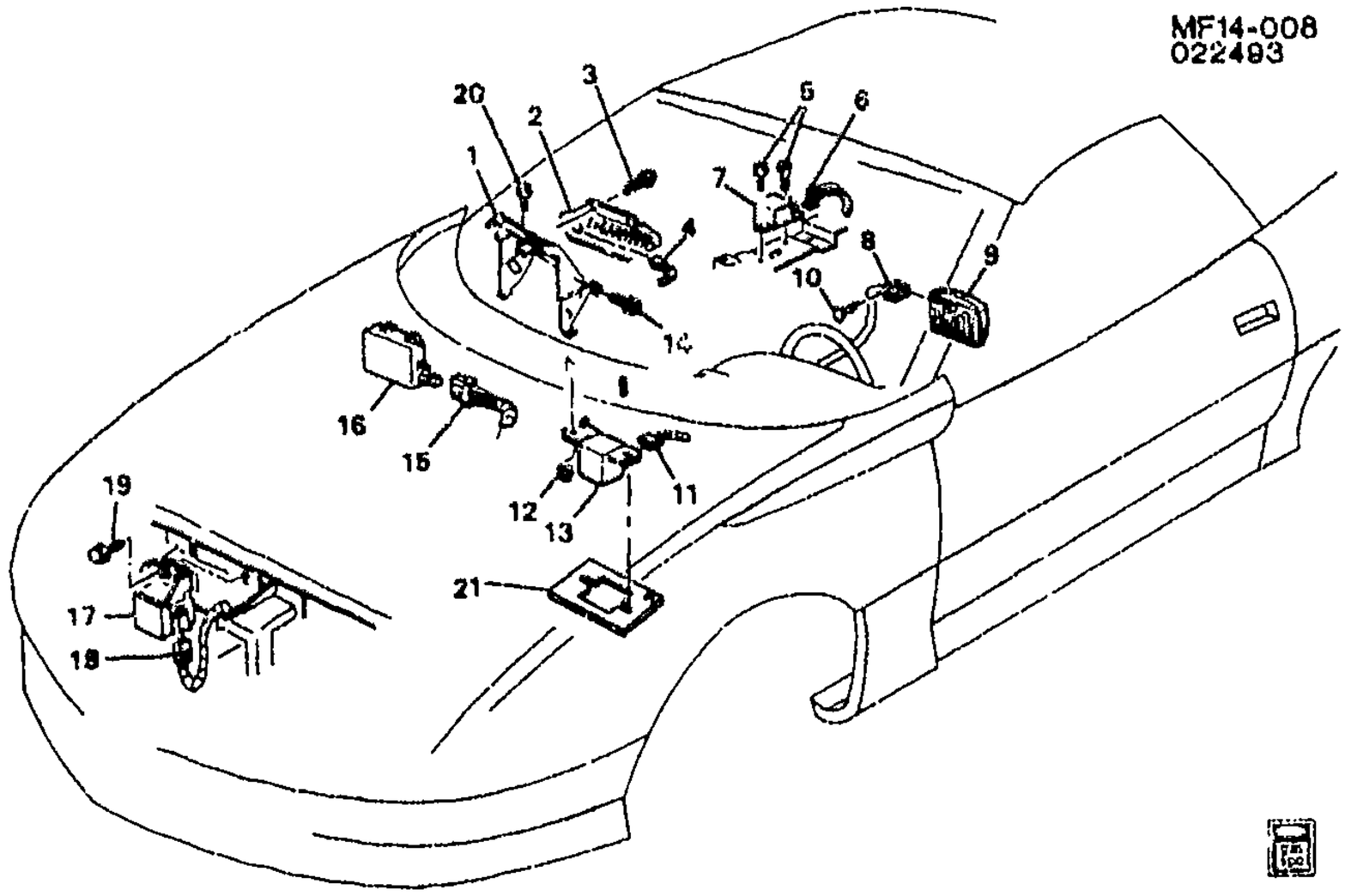

MF14–008

1993–1995 F INFLATABLE RESTRAINT SYSTEM

1.	11–B6	14.865	**BRACKET**, I/P INFL RST MDL	93–95	F (AK5)	1	10267167
2.	11–B6	14.865	**MODULE**, I/P INFL RST (W/O AIRBAG DR)	93–95	F (AK5)	1	16753798
3.		8.900	**BOLT/SCREW**, HWH W/FL WA M4.2X1.41X20, 6010M, 7253M, 12.5 OD, DOG PT (INFL RST I/P MDL) (8.977)	93–95		4	11509709
4.	11–B6	14.865	**CONNECTOR**, SEN–INFL RST PASS COMPT DISCM (I/P MODULE) (2–WAY M) (W/LEADS)	93–95		1	12126040
5.		8.977	**SCREW** (HWH M4.2X1.41X13ZP) (INFL RST ARMING SEN) (8.890)	93–95		2	22578495
6.	11–B6	14.865	**CONNECTOR**, SEN–INFL RST ARMING (7–WAY F, W/LEADS)	93–95		1	12126037
7.	11–B6	14.865	**SENSOR**, INFL RST ARMING	93–95	F (AK5)	1	16154691
8.	11–B6	14.865	**COIL KIT**, INFL RST STRG WHL MDL	93–95	F	1	26041005
	11–B6	14.865	**COIL KIT**, INFL RST STRG WHL MDL	93	F (MD8, T2J) (EXPORT)	1	26050811
9.	11–B6	14.865	**MODULE**, STRG WHL INFL RST	93–95	F (AK5)	1	17998545
10.	11–B6	14.865	**RETAINER**, STRG WHL INFL RST MDL WRG HARN CONN (BLUE)	93–95	F	1	12077979
	11–B6	14.865	**RETAINER**, STRG WHL INFL RST MDL WRG HARN CONN (SPRING TYPE, NOM DIA 42, CLOSED 37.2 OPEN 44MM, 15MM WIDE) (8.950)	93–95	F	1	12052834

cardiagn.com

11.	11-B6	14.865	**CONNECTOR**, SEN-INFL RST PASS COMPT DISCM (3-WAY F, W/LEADS) (AC-DELCO #PT771)	93-95		1	12167105
12.	11-B6	14.865	**NUT**, INFL RST PASS COMPT DISCRM SEN (M6X1, 5.9, 510M (10), CA) (NUT-HEX LOCK, PREV TORQ) (8.917) (AC-DELCO #11503749)	93-95	F (AK5)	1	11503749
13.	11-B6	14.865	**SENSOR**, PASS COMPT INFL RST DISCRM	93-95	F (AK5)	1	16154681
14.		8.900	**BOLT/SCREW**, HWH W/FL WA M4.2X1.41X20, 6010M, 7253M, 12.5 OD, DOG PT (INFL RST CONT MDL BRKT) (LWR) (8.977)	93-95		4	11509709
15.	11-B6	14.865	**CONNECTOR**, MDL-INFL RST DIAGN ENGY RESV (24-WAY F) (W/LEADS) (AC-DELCO #PT1216)	93-95	F	1	12167101
16.	11-B6	14.865	**MODULE**, INFL RST DIAGN ENGY RESV (REMAN) (AC-DELCO #16150340) (FOR PROD #16139070, SEE PART #ON LBL)	93	F (AK5) (1ST DES)	1	16150340
	11-B6	14.865	**MODULE**, INFL RST DIAGN ENGY RESV (REMAN) (FOR PROD #16193430, SEE PART #ON LBL)	93	F (AK5) (2ND DES)	1	16176558
	11-B6	14.865	**MODULE**, INFL RST DIAGN ENGY RESV (REMAN)	94-95	F (AK5)	1	16176558
17.	11-B6	14.865	**SENSOR**, F/END INFL RST DISCRM	93-95	F (AK5)	1	16154671
18.	11-B6	14.865	**CONNECTOR**, INFL RST F/END DISCM SEN (2-WAY F, W/LEADS) (AC-DELCO #PT772)	93-95		1	12167106
19.		8.900	**BOLT/SCREW**, HEX FL WA, M6X1X25, 17 OD, 6202M STL, 7111M, MACH (F/END INFL RST DISCRM SEN)	93-95		AR	11516413
20.		8.977	**SCREW**, 6.3X1.81X20 (INFL RST CONT MDL BRKT) (UPR)	93-95		2	11509051
21.		N.S.	**BARRIER**, PASS COMPT INFL RST DISCRM SEN BRKT SND				

RPO DEFINITIONS

AK5 -- RESTRAINT SYSTEM,FRONT SEAT,INFLATABLE,DRIVER AND PASSENGER
MD8 -- TRANSMISSION,AUTOMATIC 4-SPEED(THM700R4/4L60)
T2J -- ORNAMENTATION,INTERIOR,EXPORT UNIQUE REQUIREMENTS(EXPORT)

cardiagn.com

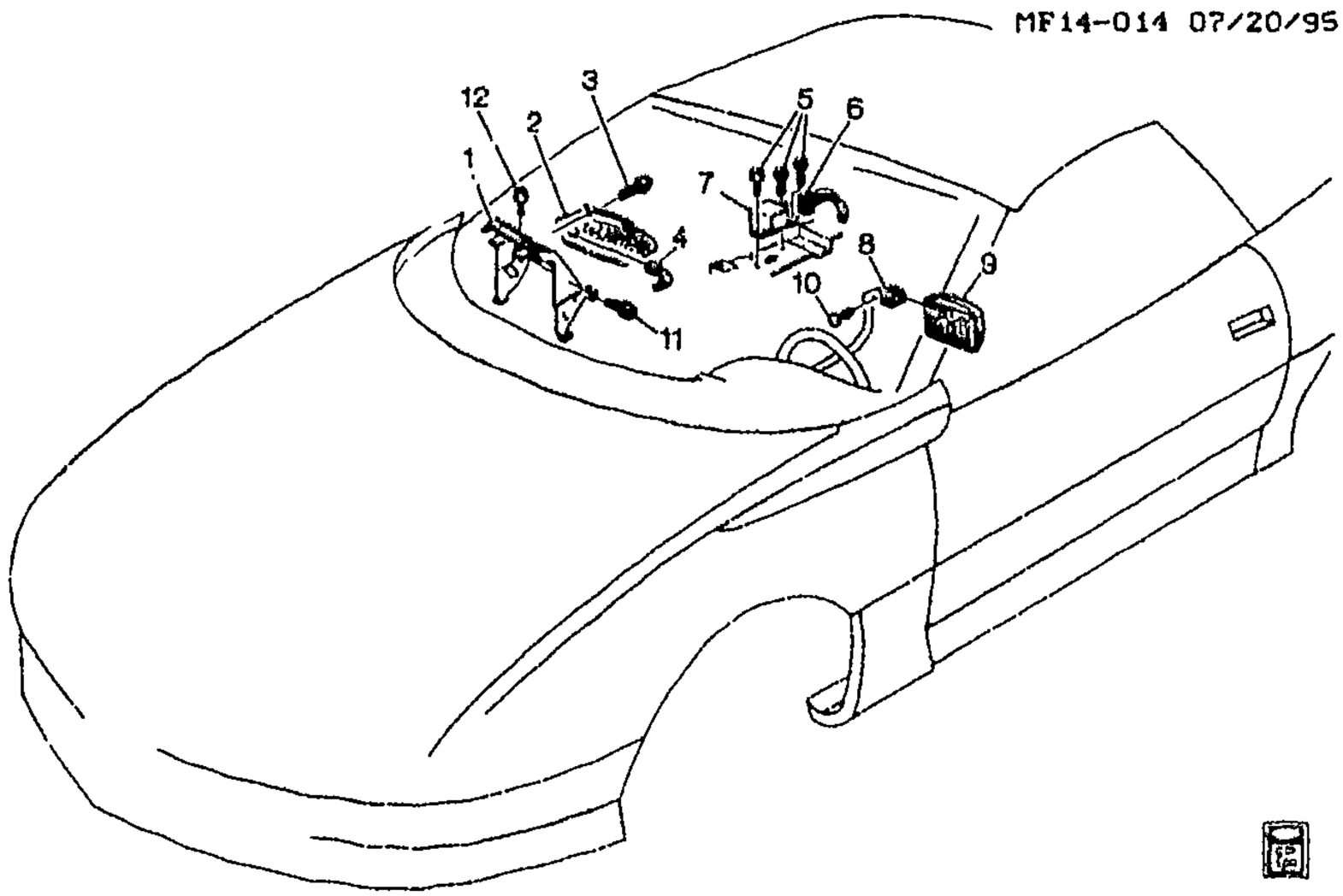

MF14-014

1996-2002 F INFLATABLE RESTRAINT SYSTEM

1.	11-B6	14.865	BRACKET, I/P INFL RST MDL ...	96--02	F (AK5)	1	10267167
2.	11-B6	14.865	MODULE, I/P INFL RST (W/O AIRBAG DR)	96	F (AK5)	1	16753798
	11-B6	14.865	MODULE, I/P INFL RST	97	F (AK5)	1	16759321
	11-B6	14.865	MODULE, I/P INFL RST	98	F (AK5)	1	16822710
	11-B6	14.865	MODULE, I/P INFL RST	99-02	F (AK5) (EXC VD1)	1	16867082
	11-B6	14.865	MODULE, I/P INFL RST	98	F (AK5, VD1) (EXPORT)	1	16823477
	11-B6	14.865	MODULE, I/P INFL RST	99-02	F (AK5, VD1) (EXPORT)	1	16824021
3.		8.900	BOLT/SCREW, HWH W/FL WA M4.2X1.41X20, 6010M, 7253M, 12.5 OD, DOG PT (INFL RST I/P MDL) (8.977)	96-02	.....	4	11509709
4.	11-B6	14.865	CONNECTOR, I/P INFL RST MDL AIRBAG INFL (I/P MODULE) (2-WAY F) (W/LEADS) (AC-DELCO #PT767)	96-02	F	2	12126498
5.		8.977	SCREW, HEX WA TAP M8X2.12X16 PZOR (INFL RST ARMING SEN)	96-02	.....	3	11508154
6.	11-B6	14.865	CONNECTOR, MDL-INFL RST DIAGN ENGY RESV (W/LEADS, W/SEN) (AC-DELCO #PT799) ..	96-97	F	1	12167134
	11-B6	14.865	CONNECTOR, MDL-INFL RST DIAGN ENGY RESV (12-WAY F, W/LEADS, INCLS YEL STRAIN RELIEF & PUSH-IN RET) (AC-DELCO #PT1147)	98	F	1	15306020
		N.S.	CONNECTOR, MDL-INFL RST DIAGN ENGY RESV	99-02	....		
7.	11-B6	14.865	MODULE, INFL RST SEN & DIAG	96-97	F (AK5)	1	9378311

cardiagn.com

							MF14-014
	11-B6	14.865	MODULE, INFL RST SEN & DIAG	98	F (AK5)	1	9378221
	11-B6	14.865	MODULE, INFL RST SEN & DIAG	99-00	F (AK5)	1	9391900
	11-B6	14.865	MODULE, INFL RST SEN & DIAG	01-02	F (AK5)	1	12209750
8.	11-B6	14.865	COIL KIT, INFL RST STRG WHL MDL	96-98	F	1	26041005
	11-B6	14.865	COIL KIT, INFL RST STRG WHL MDL	99	F	1	26072752
	11-B6	14.865	COIL KIT, INFL RST STRG WHL MDL	00-02	F (EXC UK3)	1	26072752
	11-B6	14.865	COIL KIT, INFL RST STRG WHL MDL	00-02	F (UK3)	1	26072753
9.	11-B6	14.865	MODULE, STRG WHL INFL RST	96-97	F (AK5)	1	17998545
	11-B6	14.865	MODULE, STRG WHL INFL RST	98	F (AK5)	1	10407547
	11-B6	14.865	MODULE, STRG WHL INFL RST	99	F (AK5)	1	10409458
	11-B6	14.865	MODULE, STRG WHL INFL RST	00-02	F (AK5)	1	10426848
10.	11-B6	14.865	RETAINER, STRG WHL INFL RST MDL WRG HARN CONN (BLUE)	96-97	F	1	12077979
	11-B6	14.865	RETAINER, STRG WHL INFL RST MDL WRG HARN CONN (SPRING TYPE. NOM DIA 42, CLOSED 37.2 OPEN 44MM. 15MM WIDE) (8.950)	96-99	F	1	12052834
	11-B6	14.865	RETAINER, STRG WHL INFL RST MDL WRG HARN CONN (BLUE)	00-02	F (LS1)	1	12077979
	11-B6	14.865	RETAINER, STRG WHL INFL RST MDL WRG HARN CONN (BLUE)	00-02	F (L36)	1	12077979
11.		8.900	BOLT/SCREW, HWH W/FL WA M4.2X1.41X20, 6010M, 7253M, 12.5 OD, DOG PT (INFL RST CONT MDL BRKT) (LWR) (8.977)	96-02		4	11509709
12.		8.977	SCREW, 6.3X1.81X20 (INFL RST CONT MDL BRKT) (UPR)	96-02		2	11509051

RPO DEFINITIONS

AK5 – RESTRAINT SYSTEM,FRONT SEAT,INFLATABLE,DRIVER AND PASSENGER
LS1 – ENGINE GAS, 8 CYL, 5.7L, SFI, ALUMINUM ENGINE
L36 – ENGINE GAS, 6 CYL, 3.8K, MFI, V6, HO (ERV6 SERIES)
UK3 – ELECTRONIC SYSTEM,ACCESSORY CONTROL
VD1 – PROVISION OPTIONS,EUROPE(EXPORT)

cardiagn.com

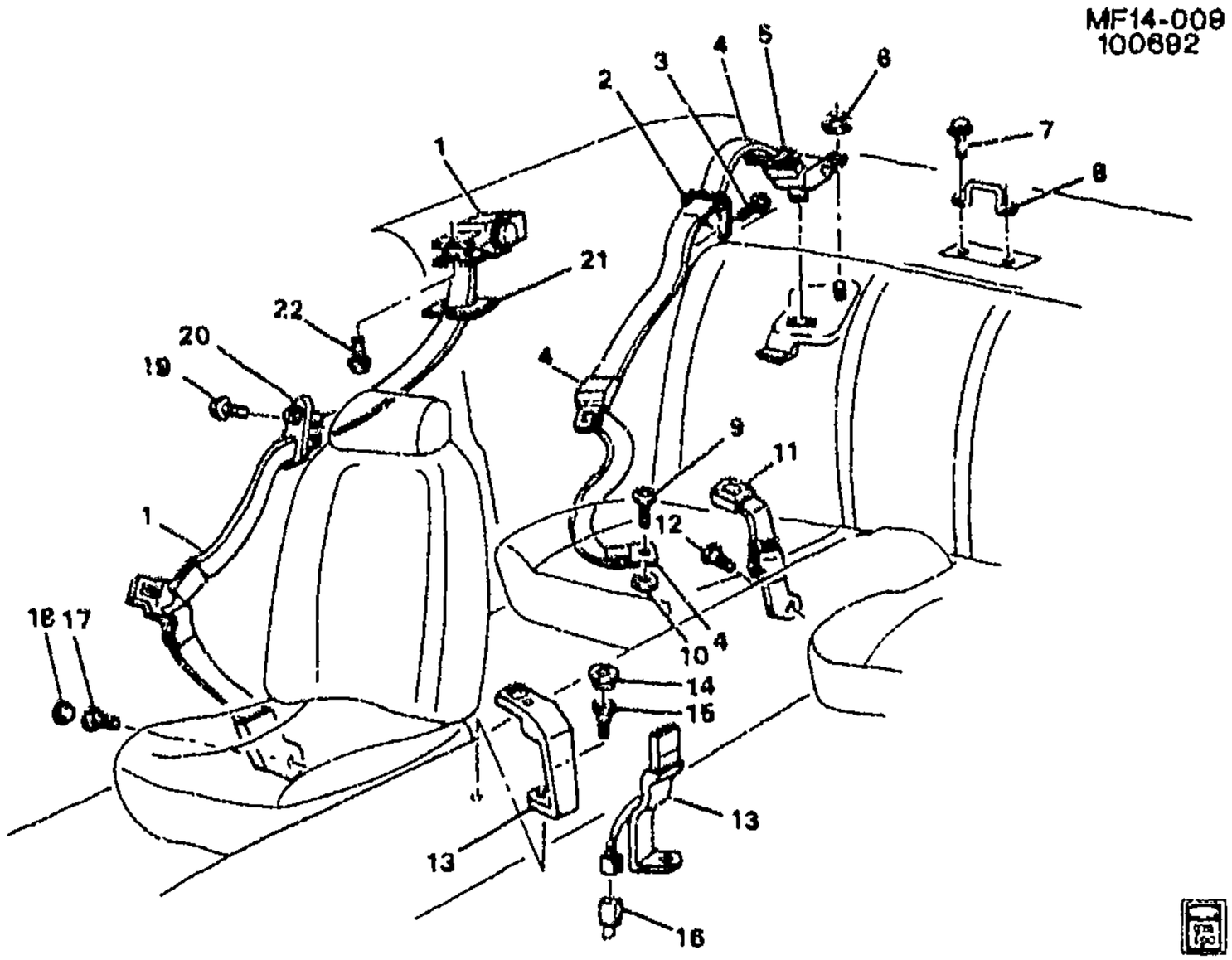

MF14-009

1993-1996 F87 SEAT BELT HARDWARE

1.	11-B10	14.875	BELT KIT, D/SEAT (RETR SI) (INCLS 21) (GRAPHITE)	93	F87 (AK5, 12I)	1	12513033
	11-B10	14.875	BELT KIT, D/SEAT (RETR SI) (INCLS 21) (GRAY)	93-95	F87 (AK5, 14I)	1	12513037
	11-B10	14.875	BELT KIT, D/SEAT (RETR SI) (INCLS 21) (GRAPHITE)	94-95	F87 (AK5, 12I, 73I)	1	12513033
	11-B10	14.875	BELT KIT, D SEAT (RETR SI) (INCLS 21) (BEIGE)	93-95	F87 (AK5, 64I)	1	12513035
	11-B10	14.875	BELT KIT, D/SEAT (RETR SI) (INCLS 21) (GRAPHITE)	96	F87 (AK5, 12I, 73I)	1	12527819
	11-B10	14.875	BELT KIT, D/SEAT (RETR SI) (INCLS 21) (NEUTRAL)	96	F87 (AK5, 52I)	1	12527823
	11-B10	14.875	BELT KIT, D/SEAT (RETR SI) (INCLS 21) (GRAY)	96	F87 (AK5, 14I)	1	12528994
	11-B10	14.875	BELT KIT, P/SEAT (RETR SI) (INCLS 21) (GRAPHITE)	93	F87 (AK5, 12I)	1	12513032
	11-B10	14.875	BELT KIT, P/SEAT (RETR SI) (INCLS 21) (GRAPHITE)	94-95	F87 (AK5, 12I, 73I)	1	12513032
	11-B10	14.875	BELT KIT, P/SEAT (RETR SI) (INCLS 21) (BEIGE)	93-95	F87 (AK5, 64I)	1	12513034
	11-B10	14.875	BELT KIT, P/SEAT (RETR SI) (INCLS 21) (GRAY)	93-95	F87 (AK5, 14I)	1	12513036
	11-B10	14.875	BELT KIT, P/SEAT (RETR SI) (INCLS 21) (GRAPHITE)	96	F87 (AK5, 12I, 73I)	1	12527818
	11-B10	14.875	BELT KIT, P/SEAT (RETR SI) (INCLS 21) (NEUTRAL)	96	F87 (AK5, 52I)	1	12527822

cardiagn.com

	11-B10	14.875	BELT KIT, P/SEAT (RETR SI) (INCLS 21) (GRAY)	96	F87 (AK5, 14I)	1	12528993
2.		N.S.	GUIDE, R/SEAT SHLDR BELT (PART OF 4)				
3.	11-B10	14.875	BOLT, R/SEAT SHLDR BELT GDE (6X1X35 TAP 12.75 OD)	93-96	F	4	10138207
4.	11-B10	14.875	BELT KIT, R/SEAT (RETR SI) (INCLS 2, 5) (GRAPHITE)	93	F87 (12I)	RH	12522560
	11-B10	14.875	BELT KIT, R/SEAT (RETR SI) (INCLS 2, 5) (GRAPHITE)	93	F87 (12I)	LH	12522561
	11-B10	14.875	BELT KIT, R/SEAT (RETR SI) (INCLS 2, 5) (BEIGE)	93-95	F87 (64I)	RH	12522562
	11-B10	14.875	BELT KIT, R/SEAT (RETR SI) (INCLS 2, 5) (BEIGE)	93-95	F87 (64I)	LH	12522563
	11-B10	14.875	BELT KIT, R/SEAT (RETR SI) (INCLS 2, 5) (GRAY)	93-95	F87 (14I)	RH	12522564
	11-B10	14.875	BELT KIT, R/SEAT (RETR SI) (INCLS 2, 5) (GRAY)	93-95	F87 (14I)	LH	12522565
	11-B10	14.875	BELT KIT, R/SEAT (RETR SI) (INCLS 2, 5) (GRAPHITE)	94-96	F87 (12I, 73I)	RH	12522560
	11-B10	14.875	BELT KIT, R/SEAT (RETR SI) (INCLS 2, 5) (GRAPHITE)	94-96	F87 (12I, 73I)	LH	12522561
	11-B10	14.875	BELT KIT, R/SEAT (RETR SI) (INCLS 2, 5) (NEUTRAL) (7 PANEL WEBBING)	96	F67-87 (52I)	RH	12369378
	11-B10	14.875	BELT KIT, R/SEAT (RETR SI) (INCLS 2, 5) (NEUTRAL) (7 PANEL WEBBING)	96	F67-87 (52I)	LH	12369379
	11-B10	14.875	BELT KIT, R/SEAT (RETR SI) (INCLS 2, 5) (GRAY)	96	F87 (14I)	RH	12528739
	11-B10	14.875	BELT KIT, R/SEAT (RETR SI) (INCLS 2, 5) (GRAY)	96	F87 (14I)	LH	12528999
5.		N.S.	BEZEL, R/SEAT SHLDR BELT OPG (PART OF 4)				
6.		8.017	NUT-HEX FLANGE M12 X 1.75 PC (R/SEAT SHLDR BELT RETR)	93-96	F87	AR	11508101
7.		8.900	BOLT, M6X1X12, 10 THD, 11.6 OD, 9.8 GM500-M, POR, MACH (PART OF 8) (AC-DELCO #11514149)	93-96		4	11514149
8.	11-B10	14.870	BELT KIT, CHILD ST RST SYS (INCLS 7)	93-96	F (Z49) (EXPORT)	2	10251104
9.	11-B10	14.875	BOLT, R/SEAT SHLDR BELT (M12 X 1.75 X 31) (RD HD)	93-96	F	2	20247398
10.	11-B10	14.875	SPACER, R/SEAT BELT (RETR SI) (SLEV BSHG)	93-96	F (AK5)	2	20295278
11.	11-B10	14.875	BELT KIT, R/SEAT (BKL SI) (GRAPHITE)	93	F (12I)	2	12522050
	11-B10	14.875	BELT KIT, R/SEAT (BKL SI) (BEIGE)	93-95	F (64I)	2	12522051
	11-B10	14.875	BELT KIT, R/SEAT (BKL SI) (GRAY)	93-96	F (14I)	2	12522052
	11-B10	14.875	BELT KIT, R/SEAT (BKL SI) (GRAPHITE)	94-96	F (12I, 73I)	2	12522050
12.	11-B10	14.875	BOLT, R/SEAT BELT (BKL SI) (M12 X 1.75 X 31) (RD HD)	93-96	F	2	20247398
13.	11-B10	14.875	BELT KIT, D/SEAT (BKL SI) (GRAPHITE)	93	F (AK5, 12I)	1	12513789

cardiagn.com

	11-B10	14.875	BELT KIT, D/SEAT (BKL SI) (BEIGE)	93-95	F (AK5, 64I)	1	12513771
	11-B10	14.875	BELT KIT, D/SEAT (BKL SI) (GRAY)	93-95	F (AK5, 14I)	1	12513773
	11-B10	14.875	BELT KIT, D/SEAT (BKL SI) (GRAPHITE)	94-95	F (AK5, 12I, 73I)	1	12513769
	11-B10	14.875	BELT KIT, D/SEAT (BKL SI) (GRAPHITE)	96	F (AK5, 12I, 73I)	1	12527813
	11-B10	14.875	BELT KIT, D/SEAT (BKL SI) (GRAY)	96	F (AK5, 14I)	1	12527815
	11-B10	14.875	BELT KIT, D/SEAT (BKL SI) (NEUTRAL)	96	F (AK5, 52I)	1	12527817
	11-B10	14.875	BELT KIT, P/SEAT (BKL SI) (GRAPHITE)	93	F (AK5, 12I)	1	12513768
	11-B10	14.875	BELT KIT, P/SEAT (BKL SI) (BEIGE)	93-95	F (AK5, 64I)	1	12513770
	11-B10	14.875	BELT KIT, P/SEAT (BKL SI) (GRAY)	93-95	F (AK5, 14I)	1	12513772
	11-B10	14.875	BELT KIT, P/SEAT (BKL SI) (GRAPHITE)	94-95	F (AK5, 12I, 73I)	1	12513768
	11-B10	14.875	BELT KIT, P/SEAT (BKL SI) (GRAPHITE)	96	F (AK5, 12I, 73I)	1	12527812
	11-B10	14.875	BELT KIT, P/SEAT (BKL SI) (GRAY)	96	F (AK5, 14I)	1	12527814
	11-B10	14.875	BELT KIT, P/SEAT (BKL SI) (NEUTRAL)	96	F (AK5, 52I)	1	12527816
14.	11-B10	14.875	PLUG, D/SEAT BELT BOLT ACC HOLE (BKL SI) (GRAY)	93-96	F (AK5, 14I)	1	10170895
	11-B10	14.875	PLUG, D/SEAT BELT BOLT ACC HOLE (BKL SI) (BEIGE)	93-95	F (AK5, 64I)	1	10170896
	11-B10	14.875	PLUG, D/SEAT BELT BOLT ACC HOLE (BKL SI) (GRAPHITE)	93	F (AK5, 12I)	1	10170897
	11-B10	14.875	PLUG, D/SEAT BELT BOLT ACC HOLE (BKL SI) (GRAPHITE)	94-96	F (AK5, 12I, 73I)	1	10170897
	11-B10	14.875	PLUG, D/SEAT BELT BOLT ACC HOLE (BKL SI) (NEUTRAL)	96	F (AK5, 52I)	1	3544855
	11-B10	14.875	PLUG, P/SEAT BELT BOLT ACC HOLE (BKL SI) (GRAY)	93-96	F (AK5, 14I)	1	10170895
	11-B10	14.875	PLUG, P/SEAT BELT BOLT ACC HOLE (BKL SI) (BEIGE)	93-95	F (AK5, 64I)	1	10170896
	11-B10	14.875	PLUG, P/SEAT BELT BOLT ACC HOLE (BKL SI) (GRAPHITE)	93	F (AK5, 12I)	1	10170897
	11-B10	14.875	PLUG, P/SEAT BELT BOLT ACC HOLE (BKL SI) (GRAPHITE)	94-96	F (AK5, 12I, 73I)	1	10170897
	11-B10	14.875	PLUG, P/SEAT BELT BOLT ACC HOLE (BKL SI) (NEUTRAL)	96	F (AK5, 52I)	1	3544855
15.	11-B10	14.875	BOLT, D/SEAT BELT (BKL SI) (M12 X 1.75 X 31) (RD HD)	93-96	F (AK5)	1	20247398
	11-B10	14.875	BOLT, P/SEAT BELT (BKL SI) (M12 X 1.75 X 31) (RD HD)	93-96	F (AK5)	1	20247398
16.	11-N5	9.765	CONNECTOR, LP-ST BELT IND (BLACK) (2-WAY M W/LEADS) (2.535) (AC-DELCO #PT103)	93	F	1	12085481
	11-N26	13.100	CONNECTOR, INLINE-TO ST BELT SW (BLACK) (2-WAY M W/LEADS) (2.535) (AC-DELCO #PT103)	94-96	F	2	12085481

cardiagn.com

17.	11-B10	14.875	BOLT, D/SEAT BELT (RETR SI) (M12 X 1.75 X 31) (RD HD)	93-96	F (AK5)	1	20247398
	11-B10	14.875	BOLT, P/SEAT BELT (RETR SI) (M12 X 1.75 X 31) (RD HD)	93-96	F (AK5)	1	20247398
18.	11-B10	14.875	PLUG, D/SEAT BELT BOLT ACC HOLE (RETR SI) (GRAY)	93-96	F (AK5, 14I)	1	10170895
	11-B10	14.875	PLUG, D/SEAT BELT BOLT ACC HOLE (RETR SI) (BEIGE)	93-95	F (AK5, 64I)	1	10170896
	11-B10	14.875	PLUG, D/SEAT BELT BOLT ACC HOLE (RETR SI) (GRAPHITE)	93	F (AK5, 12I)	1	10170897
	11-B10	14.875	PLUG, D/SEAT BELT BOLT ACC HOLE (RETR SI) (GRAPHITE)	94-96	F (AK5, 12I, 73I)	1	10170897
	11-B10	14.875	PLUG, D/SEAT BELT BOLT ACC HOLE (RETR SI) (NEUTRAL)	96	F (AK5, 52I)	1	3544855
	11-B10	14.875	PLUG, P/SEAT BELT BOLT ACC HOLE (RETR SI) (GRAY)	93-96	F (AK5, 14I)	1	10170895
	11-B10	14.875	PLUG, P/SEAT BELT BOLT ACC HOLE (RETR SI) (BEIGE)	93-95	F (AK5, 64I)	1	10170896
	11-B10	14.875	PLUG, P/SEAT BELT BOLT ACC HOLE (RETR SI) (GRAPHITE)	93	F (AK5, 12I)	1	10170897
	11-B10	14.875	PLUG, P/SEAT BELT BOLT ACC HOLE (RETR SI) (GRAPHITE)	94-96	F (AK5, 12I, 73I)	1	10170897
	11-B10	14.875	PLUG, P/SEAT BELT BOLT ACC HOLE (RETR SI) (NEUTRAL)	96	F (AK5, 52I)	1	3544855
19.	11-B10	14.875	BOLT, D/SEAT SHLDR BELT GDE (M4.2X1.41X16) (11.573) (TO H/RST SI)	93-96	F87 (AR9)	2	16739619
	11-B10	14.875	BOLT, P/SEAT SHLDR BELT GDE (M4.2X1.41X16) (11.573) (TO H/RST SI)	93-95	F87 (AR9)	2	16739619
	11-B10	14.875	BOLT, P/SEAT SHLDR BELT GDE (M4.2X1.41X20, NZ) (8.977)	96	F87 (AR9) (EXC VE1)	2	11516665
	11-B10	14.875	BOLT, P/SEAT SHLDR BELT GDE (M4.2X1.41X16) (11.573)	96	F87 (AR9) (EXC VE1)	2	16739619
20.	11-B10	14.875	GUIDE, D/SEAT SHLDR BELT (GRAPHITE)	93	F87 (AR9, 12I, 14I)	1	16735697
	11-B10	14.875	GUIDE, D/SEAT SHLDR BELT (BEIGE)	93	F87 (AR9, 64I)	1	16735699
	11-B10	14.875	GUIDE, D/SEAT SHLDR BELT (GRAPHITE)	94-96	F87 (AR9, 12I, 14I, 73I)	1	16730219
	11-B10	14.875	GUIDE, D/SEAT SHLDR BELT (BEIGE)	94-95	F87 (AR9, 64I)	1	16730223
	11-B10	14.875	GUIDE, D/SEAT SHLDR BELT (GRAY)	96	F (AH3, AG1, AR9, 14B)	1	16730221
	11-B10	14.875	GUIDE, D/SEAT SHLDR BELT (NEUTRAL)	96	F87 (AQ9, AR9, 52I)	1	16789715
	11-B10	14.875	GUIDE, P/SEAT SHLDR BELT (GRAPHITE)	93	F87 (AR9, 12I, 14I)	1	16735696
	11-B10	14.875	GUIDE, P/SEAT SHLDR BELT (BEIGE)	93	F87 (AR9, 64I)	1	16735698
	11-B10	14.875	GUIDE, P/SEAT SHLDR BELT (GRAPHITE)	94-96	F87 (AR9, 12I, 14I, 73I)	1	16730218
	11-B10	14.875	GUIDE, P/SEAT SHLDR BELT (BEIGE)	94-95	F87 (AR9, 64I)	1	16730222
	11-B10	14.875	GUIDE, P/SEAT SHLDR BELT (GRAY)	96	F (AR9, 14B)	1	16730220
	11-B10	14.875	GUIDE, P/SEAT SHLDR BELT (NEUTRAL)	96	F87 (AR9, 522, 52B)	1	16789714

cardiagn.com

21.		N.S.	ESCUTCHEON, HDLNG TR FIN PNL F/SEAT BELT OPG (PART OF 1)		.....		
22.	11-B10	14.875	BOLT, D/SEAT SHLDR BELT RETR (M8X1.25X20, 20 THD) (8.977)	03-96	F87 (AK5)	2	11516671
	11-B10	14.875	BOLT, P/SEAT SHLDR BELT RETR (M8X1.25X20, 20 THD) (8.977)	93-96	F87 (AK5)	2	11516671

RPO DEFINITIONS

AG1 – ADJUSTER,SEAT,6-WAY POWER,DRIVER(60-40)(VAR 2)
AH3 – ADJUSTER,SEAT,4-WAY MANUAL,DRIVER
AK5 – RESTRAINT SYSTEM,FRONT SEAT,INFLATABLE DRIVER AND PASSENGER
AQ9 – SEAT,FRONT BUCKET,DRIVER,PASSENGER,RECLINING
AR9 – SEAT,FRONT BUCKET,DRIVER,PASSENGER,MANUAL RECLINING(EUROPEAN STYLE)
VE1 – PROVISION OPTIONS,JAPAN(EXPORT)
Z49 – MANDATORY CANADIAN BASE EQUIPMENT MODIFICATIONS(CANADIAN)
12I – INTERIOR TRIM GRAPHITE
14B – TRIM COMBINATION – CLOTH, DK GRAY
14I – INTERIOR TRIM LT GRAY
52B – TRIM COMBINATION CLOTH, LT NEUTRAL
52I – INTERIOR TRIM LIGHT NEUTRAL
522 – TRIM COMBINATION – LEATHER, NEUTRAL
64I – INTERIOR TRIM,LIGHT BEIGE
73I – INTERIOR TRIM,FLAME RED

cardiagn.com

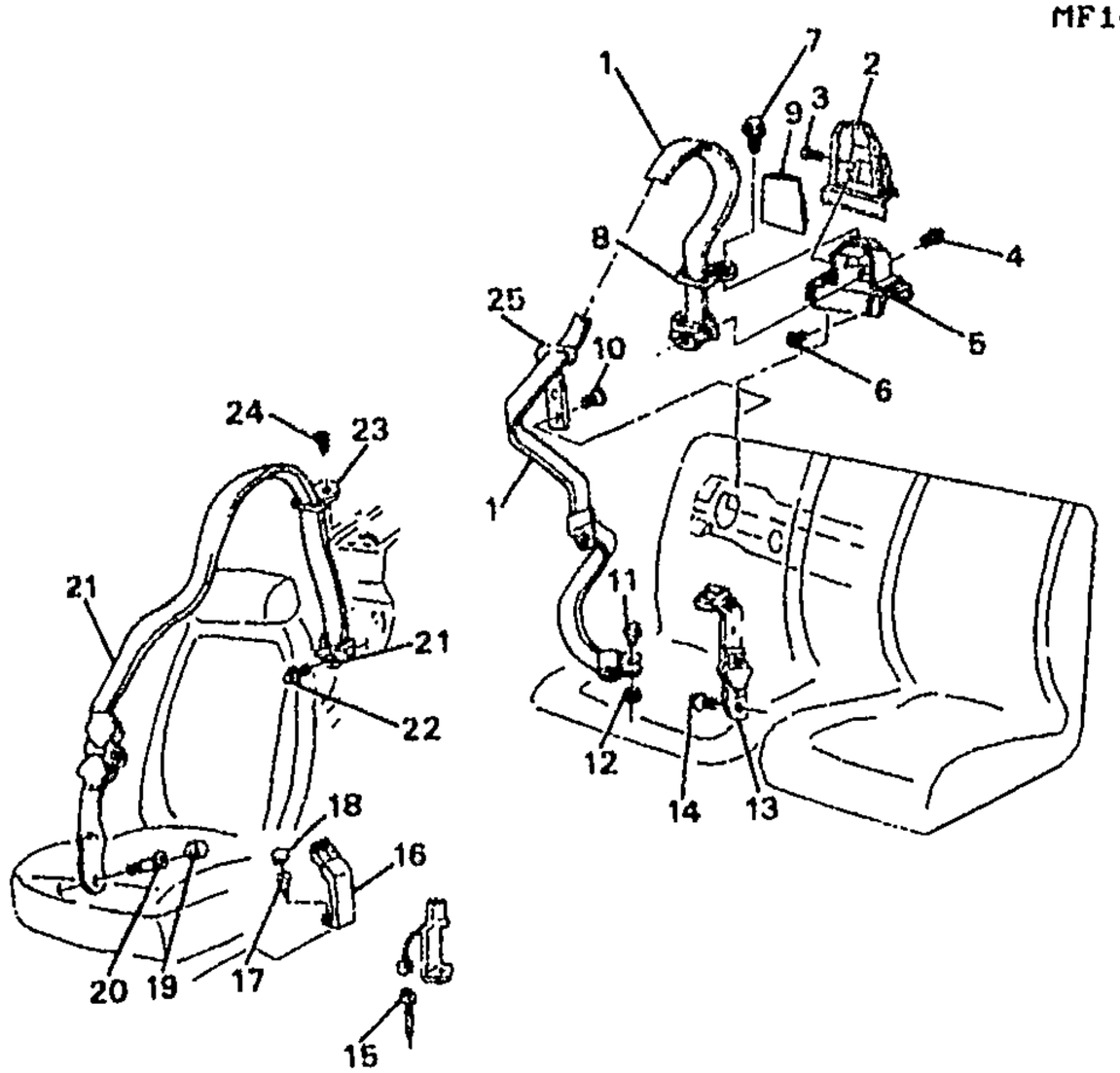

MF14-013

1994-1995 F67 SEAT BELT HARDWARE

1.	11-B10	14.875	BELT KIT, R/SEAT (RETR SI) (INCLS 8) (GRAPHITE) (HAS ANTI ROTATION BRKT W/2 TABS, FOR 2ND DES SEE 12524526)	94	F67 (12I, 73I) (1ST DES)	RH	12523478
	11-B10	14.875	BELT KIT, R/SEAT (RETR SI) (INCLS 8) (GRAPHITE) (HAS ANTI ROTATION BRKT W/2 TABS, FOR 2ND DES SEE 12524527)	94	F67 (12I, 73I) (1ST DES)	LH	12523479
	11-B10	14.875	BELT KIT, R/SEAT (RETR SI) (INCLS 8) (GRAY) (HAS ANTI ROTATION BRKT W/2 TABS, FOR 2ND DES SEE 12524528)	94	F67 (14I) (1ST DES) ...	RH	12523480
	11-B10	14.875	BELT KIT, R/SEAT (RETR SI) (INCLS 8) (GRAY) (HAS ANTI ROTATION BRKT W/2 TABS, FOR 2ND DES SEE 12524529)	94	F67 (14I) (1ST DES) ...	LH	12523481
	11-B10	14.875	BELT KIT, R/SEAT (RETR SI) (INCLS 8) (BEIGE) (HAS ANTI ROTAION BRKT W/2 TABS, FOR 2ND DES SEE 12524530)	94	F67 (64I) (1ST DES) ...	RH	12523482
	11-B10	14.875	BELT KIT, R/SEAT (RETR SI) (INCLS 8) (BEIGE) (HAS ANTI ROTATION BRKT W/2 TABS, FOR 2ND DES SEE 12524531)	94	F67 (64I) (1ST DES) ...	LH	12523483

cardiagn.com

	11-B10	14.875	**BELT KIT**, R/SEAT (RETR SI) (INCLS 8) (GRAPHITE) (HAS ANTI ROTATION BRKT W/3 TABS, FOR 1ST DES SEE 12523478)	94	F67 (12I, 73I) (2ND DES)	RH	12524526
	11-B10	14.875	**BELT KIT**, R/SEAT (RETR SI) (INCLS 8) (GRAPHITE) (HAS ANTI ROTATION BRKT W/3 TABS, FOR 1ST DES SEE 12523479)	94	F67 (12I, 73I) (2ND DES)	LH	12524527
	11-B10	14.875	**BELT KIT**, R/SEAT (RETR SI) (INCLS 8) (GRAY) (HAS ANTI ROTATION BRKT W/3 TABS, FOR 1ST DES SEE 12523480)	94	F67 (14I) (2ND DES) ...	RH	12524528
	11-B10	14.875	**BELT KIT**, R/SEAT (RETR SI) (INCLS 8) (GRAY) (HAS ANTI ROTATION BRKT W/3 TABS, FOR 1ST DES SEE 12523481)	94	F67 (14I) (2ND DES) ...	LH	12524529
	11-B10	14.875	**BELT KIT**, R/SEAT (RETR SI) (INCLS 8) (BEIGE) (HAS ANTI ROTAION BRKT W/3 TABS, FOR 1ST DES SEE 12523482)	94	F67 (64I) (2ND DES) ...	RH	12524530
	11-B10	14.875	**BELT KIT**, R/SEAT (RETR SI) (INCLS 8) (BEI[illegible]) (HAS ANTI ROTATION BF[illegible] W/3 TABS, FOR 1ST DES SEE 12523483)	94	F67 (64I) (2ND DES) ...	LH	12524531
	11-B10	14.875	**BELT KIT**, R/SEAT (RETR SI) (INCLS 8) (GRAPHITE)	95	F67 (12I, 73I)	RH	12524526
	11-B10	14.875	**BELT KIT**, R/SEAT (RETR SI) (INCLS 8) (GRAPHITE)	95	F67 (12I, 73I)	LH	12524527
	11-B10	14.875	**BELT KIT**, R/SEAT (RETR SI) (INCLS 8) (GRAY)	95	F67 (14I)	RH	12524528
	11-B10	14.875	**BELT KIT**, R/SEAT (RETR SI) (INCLS 8) (GRAY)	95	F67 (14I)	LH	12524529
	11-B10	14.875	**BELT KIT**, R/SEAT (RETR SI) (INCLS 8) (BEIGE)	95	F67 (64I)	RH	12524530
	11-B10	14.875	**BELT KIT**, R/SEAT (RETR SI) (INCLS 8) (BEIGE)	95	F67 (64I)	LH	12524531
2.	11-B10	14.875	**COVER**, R/SEAT SHLDR BELT RETR TR (GRAY)	94-95	F67 (14I)	RH	10211817
	11-B10	14.875	**COVER**, R/SEAT SHLDR BELT RETR TR (GRAPHITE)	94-95	F67 (12I, 73I)	RH	10211818
	11-B10	14.875	**COVER**, R/SEAT SHLDR BELT RETR TR (BEIGE)	94-95	F67 (64I)	RH	10211819
	11-B10	14.875	**COVER**, R/SEAT SHLDR BELT RETR TR (GRAY)	94-95	F67 (14I)	LH	10213090
	11-B10	14.875	**COVER**, R/SEAT SHLDR BELT RETR TR (GRAPHITE)	94-95	F67 (12I, 73I)	LH	10213091
	11-B10	14.875	**COVER**, R/SEAT SHLDR BELT RETR TR (BEIGE)	94-95	F67 (64I)	LH	10213092
3.	11-B10	14.875	**RETAINER**, R/SEAT SHLDR BELT RETR TR CVR (OUTBOARD SI) ..	94-95	F67	2	10211824
4.		8.900	**BOLT**, HFH M10X1.5X20 9.8 PZOR (R/SEAT BELT (RETR SI)) .	94-95	.....	2	11508202
5.	11-B10	14.875	**BRACKET**, R/SEAT SHLDR BELT RETR	94-95	F67	RH	10280914
	11-B10	14.875	**BRACKET**, R/SEAT SHLDR BELT RETR	94-95	F67	LH	10280915

cardiagn.com

6.	11-B10	14.875	BOLT, R/SEAT SHLDR BELT RETR (M8X1.25X30, 28.8 THD) (8.900)	94-95	F67	12	11515650
	11-B10	14.875	BOLT, R/SEAT SHLDR BELT RETR (M8X1.25X30.0 LG) (8.900)	94-95	F67	12	24503695
7.	11-B10	14.875	BOLT, R/SEAT SHLDR BELT GDE (6X1X35 TAP 12.75 OD)	94-05	F	4	10138207
	11-B10	14.875	BOLT, R/SEAT SHLDR BELT GDE (1/2X13X1.08)	94	F67	AR	10225190
	11-B10	14.875	BOLT, R/SEAT SHLDR BELT GDE (ROUND HEAD)	94-95	F67	2	16621692
8.	11-B10	14.875	GUIDE, R/SEAT SHLDR BELT (PART OF 1) (GRAPHITE)	94-95	F67 (12I, 73I, 122)	RH	10253437
	11-B10	14.875	GUIDE, R/SEAT SHLDR BELT (PART OF 1) (GRAPHITE)	94	F67 (12I, 73I, 122)	LH	10253438
	11-B10	14.875	GUIDE, R/SEAT SHLDR BELT (PART OF 1) (GRAY)	94	F67 (142, 14I)	RH	10253439
	11-B10	14.875	GUIDE, R/SEAT SHLDR BELT (PART OF 1) (GRAY)	94	F67 (14I)	LH	10253440
	11-B10	14.875	GUIDE, R/SEAT SHLDR BELT (PART OF 1) (BEIGE)	94	F67 (64I, 642)	RH	10253441
	11-B10	14.875	GUIDE, R/SEAT SHLDR BELT (PART OF 1) (BEIGE)	94	F67 (64I, 642)	LH	10253442
	11-B10	14.875	GUIDE, R/SEAT SHLDR BELT (PART OF 1) (GRAPHITE)	95	F67 (12I, 73I)	LH	10253438
	11-B10	14.875	GUIDE, R/SEAT SHLDR BELT (PART OF 1) (GRAY)	95	F67 (14B)	RH	10253439
	11-B10	14.875	GUIDE, R/SEAT SHLDR BELT (PART OF 1) (GRAY)	95	F67 (14B)	LH	10253440
	11-B10	14.875	GUIDE, R/SEAT SHLDR BELT (PART OF 1) (BEIGE)	95	F67 (64B, 642)	RH	10253441
	11-B10	14.875	GUIDE, R/SEAT SHLDR BELT (PART OF 1) (BEIGE)	95	F67 (64B, 642)	LH	10253442
9.	11-B10	14.875	COVER, R/SEAT SHLDR BELT RETR ACC HOLE (GRAY)	94-95	F67 (14I)	RH	10211822
	11-B10	14.875	COVER, R/SEAT SHLDR BELT RETR ACC HOLE (GRAY)	94-95	F67 (14I)	LH	10211823
	11-B10	14.875	COVER, R/SEAT SHLDR BELT RETR ACC HOLE (GRAPHITE)	94-95	F67 (12I, 73I)	LH	10213093
	11-B10	14.875	COVER, R/SEAT SHLDR BELT RETR ACC HOLE (GRAPHITE)	94-95	F67 (12I, 73I)	RH	10213094
	11-B10	14.875	COVER, R/SEAT SHLDR BELT RETR ACC HOLE (BEIGE)	94-95	F67 (64I)	LH	10213095
	11-B10	14.875	COVER, R/SEAT SHLDR BELT RETR ACC HOLE (BEIGE)	94-95	F67 (64I)	RH	10213096
10.	11-B10	14.875	BOLT, R/SEAT SHLDR BELT GDE (6X1X35 TAP 12.75 OD)	94-95	F	4	10138207
	11-B10	14.875	BOLT, R/SEAT SHLDR BELT GDE (1/2X13X1.08)	94	F67	AR	10225190
	11-B10	14.875	BOLT, R/SEAT SHLDR BELT GDE (ROUND HEAD)	94-95	F67	2	16621692
11.	11-B10	14.875	BOLT, R/SEAT SHLDR BELT (M12 X 1.75 X 31) (RD HD)	94-95	F	2	20247398
12.	11-B10	14.875	SPACER, R/SEAT BELT (RETR SI) (SLEV BSHG)	94-95	F (AK5)	2	20295278
13.	11-B10	14.875	BELT KIT, R/SEAT (BKL SI) (BEIGE)	94-95	F (64I)	2	12522051

cardiagn.com

	11-B10	14.875	BELT KIT, R/SEAT (BKL SI) (GRAY)	94-95	F (14I)	2	12522052
	11-B10	14.875	BELT KIT, R/SEAT (BKL SI) (GRAPHITE)	94-95	F (12I, 73I)	2	12522050
14.	11-B10	14.875	BOLT, R/SEAT BELT (BKL SI) (M12 X 1.75 X 31) (RD HD)	94-95	F	2	20247398
15.	11-N26	13.100	CONNECTOR, INLINE-TO ST BELT SW (BLACK) (2-WAY M W/LEADS) (2.535) (AC-DELCO #PT103)	94-95	F	2	12085481
16.	11-B10	14.875	BELT KIT, D/SEAT (BKL SI) (BEIGE)	94-95	F (AK5, 64I)	1	12513771
	11-B10	14.875	BELT KIT, D/SEAT (BKL SI) (GRAY)	94-95	F (AK5, 14I)	1	12513773
	11-B10	14.875	BELT KIT, D/SEAT (BKL SI) (GRAPHITE)	94-95	F (AK5, 12I, 73I)	1	12513769
	11-B10	14.875	BELT KIT, P/SEAT (BKL SI) (BEIGE)	94-95	F (AK5, 64I)	1	12513770
	11-B10	14.875	BELT KIT, P/SEAT (BKL SI) (GRAY)	94-95	F (AK5, 14I)	1	12513772
	11-B10	14.875	BELT KIT, P/SEAT (BKL SI) (GRAPHITE)	94-95	F (AK5, 12I, 73I)	1	12513768
17.	11-B10	14.875	BOLT, D/SEAT BELT (BKL SI) (M12 X 1.75 X 31) (RD HD)	94-95	F (AK5)	1	20247398
	11-B10	14.875	BOLT, P/SEAT BELT (BKL SI) (M12 X 1.75 X 31) (RD HD)	94-95	F (AK5)	1	20247398
18.	11-B10	14.875	PLUG, D/SEAT BELT BOLT ACC HOLE (BKL SI) (GRAY)	94-95	F (AK5, 14I)	1	10170895
	11-B10	14.875	PLUG, D/SEAT BELT BOLT ACC HOLE (BKL SI) (BEIGE)	94-95	F (AK5, 64I)	1	10170896
	11-B10	14.875	PLUG, D/SEAT BELT BOLT ACC HOLE (BKL SI) (GRAPHITE)	94-95	F (AK5, 12I, 73I)	1	10170897
	11-B10	14.875	PLUG, P/SEAT BELT BOLT ACC HOLE (BKL SI) (GRAY)	94-95	F (AK5, 14I)	1	10170895
	11-B10	14.875	PLUG, P/SEAT BELT BOLT ACC HOLE (BKL SI) (BEIGE)	94-95	F (AK5, 64I)	1	10170896
	11-B10	14.875	PLUG, P/SEAT BELT BOLT ACC HOLE (BKL SI) (GRAPHITE)	94-95	F (AK5, 12I, 73I)	1	10170897
19.	11-B10	14.875	PLUG, D/SEAT BELT BOLT ACC HOLE (RETR SI) (BEIGE)	94-95	F (AK5, 64I)	1	10170896
	11-B10	14.875	PLUG, D/SEAT BELT BOLT ACC HOLE (RETR SI) (GRAY)	94-95	F (AK5, 14I)	2	10170895
	11-B10	14.875	PLUG, D/SEAT BELT BOLT ACC HOLE (RETR SI) (GRAPHITE)	94-95	F (AK5, 12I, 73I)	1	10170897
	11-B10	14.875	PLUG, P/SEAT BELT BOLT ACC HOLE (RETR SI) (GRAY)	94-95	F (AK5, 14I)	1	10170895
	11-B10	14.875	PLUG, P/SEAT BELT BOLT ACC HOLE (RETR SI) (BEIGE)	94-95	F (AK5, 64I)	1	10170896
	11-B10	14.875	PLUG, P/SEAT BELT BOLT ACC HOLE (RETR SI) (GRAPHITE)	94-95	F (AK5, 12I, 73I)	1	10170897
20.	11-B10	14.875	BOLT, D/SEAT BELT (RETR SI) (M12 X 1.75 X 31) (RD HD)	94-95	F (AK5)	1	20247398
	11-B10	14.875	BOLT, P/SEAT BELT (RETR SI) (M12 X 1.75 X 31) (RD HD)	94-95	F (AK5)	1	20247398

cardiagn.com

21.	11-B10	14.875	BELT KIT, D/SEAT (RETR SI) (INCLS 23) (GRAPHITE) (HAS ANTI ROTATION BRKT W/2 TABS, FOR 2ND DES SEE 12524521)	94	F67 (AK5, 12I, 73I) (1ST DES)	1	12523473
	11-B10	14.875	BELT KIT, D/SEAT (RETR SI) (INCLS 23) (GRAY) (HAS ANTI ROTATION BRKT W/2 TABS, FOR 2ND DES SEE 12524523)	94	F67 (AK5, 14I) (1ST DES)	1	12523475
	11-B10	14.875	BELT KIT, D/SEAT (RETR SI) (INCLS 23) (BEIGE) (HAS ANTI ROTATION BRKT W/2 TABS, FOR 2ND DES SEE 12524525)	94	F67 (AK5, 64I) (1ST DES)	1	12523477
	11-B10	14.875	BELT KIT, D/SEAT (RETR SI) (INCLS 23) (GRAPHITE) (HAS ANTI ROTATION BRKT W/3 TABS, FOR 1ST DES SEE 12523473)	94	F67 (AK5, 12I, 73I) (2ND DES)	1	12524521
	11-B10	14.875	BELT KIT, D/SEAT (RETR SI) (INCLS 23) (GRAY) (HAS ANTI ROTATION BRKT W/3 TABS, FOR 1ST DES SEE 12523475)	94	F67 (AK5, 14I) (2ND DES)	1	12524523
	11-B10	14.875	BELT KIT, D/SEAT (RETR SI) (INCLS 23) (BEIGE) (HAS ANTI ROTATION BRKT W/3 TABS, FOR 1ST DES SEE 12523477)	94	F67 (AK5, 64I) (2ND DES)	1	12524525
	11-B10	14.875	BELT KIT, D/SEAT (RETR SI) (INCLS 23) (GRAPHITE)	95	F67 (AK5, 12I, 73I)	1	12524521
	11-B10	14.875	BELT KIT, D/SEAT (RETR SI) (INCLS 23) (GRAY)	95	F67 (AK5, 14I)	1	12524523
	11-B10	14.875	BELT KIT, D/SEAT (RETR SI) (INCLS 23) (BEIGE)	95	F67 (AK5, 64I)	1	12524525
	11-B10	14.875	BELT KIT, P/SEAT (RETR SI) (INCLS 23) (GRAPHITE) (HAS ANTI ROTATION BRKT W/2 TABS, FOR 2ND DES SEE 12524520)	94	F67 (AK5, 12I, 73I) (1ST DES)	1	12523472
	11-B10	14.875	BELT KIT, P/SEAT (RETR SI) (INCLS 23) (GRAY) (HAS ANTI ROTATION BRKT W/2 TABS, FOR 2ND DES SEE 12524522)	94	F67 (AK5, 14I) (1ST DES)	1	12523474
	11-B10	14.875	BELT KIT, P/SEAT (RETR SI) (INCLS 23) (GRAPHITE) (HAS ANTI ROTATION BRKT W/3 TABS, FOR 1ST DES SEE 12523472)	94	F67 (AK5, 12I, 73I) (2ND DES)	1	12524520
	11-B10	14.875	BELT KIT, P/SEAT (RETR SI) (INCLS 23) (GRAY) (HAS ANTI ROTATION BRKT W/3 TABS, FOR 1ST DES SEE 12523474)	94	F67 (AK5, 14I) (2ND DES)	1	12524522
	11-B10	14.875	BELT KIT, P/SEAT (RETR SI) (INCLS 23) (BEIGE) (HAS ANTI ROTATION BRKT W/3 TABS, FOR 1ST DES SEE 12513924)	94	F67 (AK5, 64I) (2ND DES)	1	12524524
	11-B10	14.875	BELT KIT, P/SEAT (RETR SI) (INCLS 23) (GRAPHITE)	95	F67 (AK5, 12I, 73I)	1	12524520
	11-B10	14.875	BELT KIT, P/SEAT (RETR SI) (INCLS 23) (GRAY)	95	F67 (AK5, 14I)	1	12524522

cardiagn.com

	11-B10	14.875	BELT KIT, P/SEAT (RETR SI) (INCLS 23) (BEIGE)	95	F67 (AK5, 64I)	1	12524524
22.	11-B10	14.875	BOLT, D/SEAT SHLDR BELT RETR (M12 X 1.75 X 30)	94-95	F67 (AK5)	1	20247145
	11-B10	14.875	BOLT, D/SEAT SHLDR BELT RETR (1/2X13X1.08)	94-95	F67 (AK5)	AR	10225190
	11-B10	14.875	BOLT, P/SEAT SHLDR BELT RETR (M12 X 1.75 X 30)	94-95	F67 (AK5)	1	20247145
23.		N.S.	RETAINER, D/SEAT SHLDR BELT (PART OF 21)				
		N.S.	RETAINER, P/SEAT SHLDR BELT (PART OF 21)				
24.	11-B10	14.875	BOLT, D/SEAT SHLDR BELT GDE (M12 X 1.75 X 30)	94-95	F67 (AK5)	1	20247145
	11-B10	14.875	BOLT, D/SEAT SHLDR BELT GDE (1/2X13X1.08)	94-95	F67 (AK5)	AR	10225190
	11-B10	14.875	BOLT, P/SEAT SHLDR BELT GDE (M12 X 1.75 X 30)	94-95	F67 (AK5)	1	20247145
	11-B10	14.875	BOLT, P/SEAT SHLDR BELT GDE (1/2X13X1.08)	94-95	F67 (AK5)	AR	10225190
25.	11-B10	14.875	GUIDE, R/SEAT SHLDR BELT (GRAPHITE)	94-95	F67 (12I, 73I, 122)	RH	10253437
	11-B10	14.875	GUIDE, R/SEAT SHLDR BELT (GRAPHITE)	94	F67 (12I, 73I, 122)	LH	10253438
	11-B10	14.875	GUIDE, R/SEAT SHLDR BELT (GRAY)	94	F67 (142, 14I)	RH	10253439
	11-B10	14.875	GUIDE, R/SEAT SHLDR BELT (GRAY)	94	F67 (14I)	LH	10253440
	11-B10	14.875	GUIDE, R/SEAT SHLDR BELT (BEIGE)	94	F67 (64I, 642)	RH	10253441
	11-B10	14.875	GUIDE, R/SEAT SHLDR BELT (BEIGE)	94	F67 (64I, 642)	LH	10253442
	11-B10	14.875	GUIDE, R/SEAT SHLDR BELT (GRAPHITE)	95	F67 (12I, 73I)	LH	10253438
	11-B10	14.875	GUIDE, R/SEAT SHLDR BELT (GRAY)	95	F67 (14B)	RH	10253439
	11-B10	14.875	GUIDE, R/SEAT SHLDR BELT (GRAY)	95	F67 (14B)	LH	10253440
	11-B10	14.875	GUIDE, R/SEAT SHLDR BELT (BEIGE)	95	F67 (64B, 642)	RH	10253441
	11-B10	14.875	GUIDE, R/SEAT SHLDR BELT (BEIGE)	95	F67 (64B, 642)	LH	10253442

RPO DEFINITIONS

AK5 – RESTRAINT SYSTEM,FRONT SEAT,INFLATABLE,DRIVER AND PASSENGER
12I – INTERIOR TRIM GRAPHITE
122 – TRIM COMBINATION LEATHER,GRAPHITE
14B – TRIM COMBINATION – CLOTH, DK GRAY
14I – INTERIOR TRIM LT GRAY
142 – TRIM COMBINATION LEATHER, LT GRAY
64B – TRIM COMBINATION CLOTH, LT BEIGE
64I – INTERIOR TRIM,LIGHT BEIGE
642 – TRIM COMBINATION LEATHER LT BEIGE
73I – INTERIOR TRIM,FLAME RED

cardiagn.com

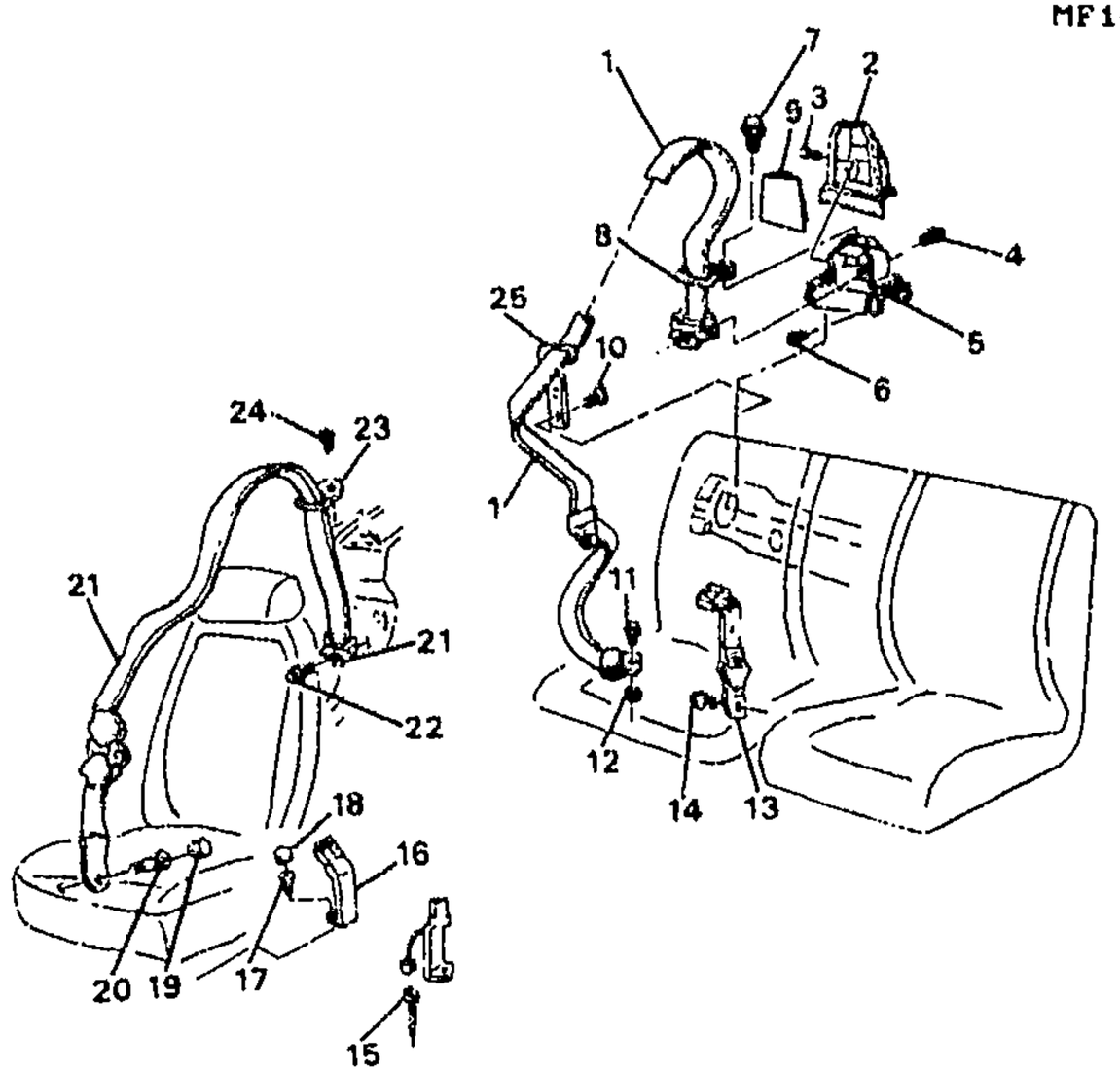

MF14-0131

1996–2002 F67 SEAT BELT HARDWARE

1.	11–B10	14.875	BELT KIT, R/SEAT (RETR SI) (INCLS 8) (GRAPHITE)	96	F67 (12I, 73I)	RH	12524526
	11–B10	14.875	BELT KIT, R/SEAT (RETR SI) (INCLS 8) (GRAPHITE)	96	F67 (12I, 73I)	LH	12524527
	11–B10	14.875	BELT KIT, R/SEAT (RETR SI) (INCLS 8) (GRAY)	96	F67 (14I)	RH	12524528
	11–B10	14.875	BELT KIT, R/SEAT (RETR SI) (INCLS 8) (GRAY)	96	F67 (14I)	LH	12524529
	11–B10	14.875	BELT KIT, R/SEAT (RETR SI) (INCLS 8) (NEUTRAL) (7 PANEL WEBBING)	96	F67–87 (52I)	RH	12369376
	11–B10	14.875	BELT KIT, R/SEAT (RETR SI) (INCLS 8) (NEUTRAL) (7 PANEL WEBBING)	96	F67–87 (52I)	LH	12369379
	11–B10	14.875	BELT KIT, R/SEAT (RETR SI) (INCLS 8) (NEUTRAL)	96	F67 (52I)	RH	12528736
	11–B10	14.875	BELT KIT, R/SEAT (RETR SI) (INCLS 8) (NEUTRAL)	96	F67 (52I)	LH	12528737
	11–B10	14.875	BELT KIT, R/SEAT (RETR SI) (INCLS 8) (GRAY) (7 PANEL WEBBING)	97	F (10I, 14I, 73I)	LH	12369380
	11–B10	14.875	BELT KIT, R/SEAT (RETR SI) (INCLS 8) (NEUTRAL)	97	F67 (52I)	RH	12453544
	11–B10	14.875	BELT KIT, R/SEAT (RETR SI) (INCLS 8) (GRAY)	97	F67 (10I, 14I, 73I)	RH	12453545
	11–B10	14.875	BELT KIT, R/SEAT (RETR SI) (INCLS 8) (NEUTRAL)	97	F67 (52I)	LH	12453547

cardiagn.com

	11-B10	14.875	BELT KIT, R/SEAT (RETR SI) (INCLS 8) (GRAY)	97	F67 (10I, 14I, 73I)	LH	12453548
	11-B10	14.875	BELT KIT, R/SEAT (RETR SI) (INCLS 8) (GRAY)	97	F67 (10I, 14I, 73I)	RH	12530567
	11-B10	14.875	BELT KIT, R/SEAT (RETR SI) (INCLS 8) (PEWTER)	97	F67 (92I)	RH	12530568
	11-B10	14.875	BELT KIT, R/SEAT (RETR SI) (INCLS 8) (NEUTRAL)	97	F67 (52I)	RH	12530570
	11-B10	14.875	BELT KIT, R/SEAT (RETR SI) (INCLS 8) (GRAY)	97	F67 (10I, 14I, 73I)	LH	12530571
	11-B10	14.875	BELT KIT, R/SEAT (RETR SI) (INCLS 8) (PEWTER)	97	F67 (92I)	LH	12530572
	11-B10	14.875	BELT KIT, R/SEAT (RETR SI) (INCLS 8) (NEUTRAL)	97	F67 (52I)	LH	12530574
		DISCON	BELT KIT, R/SEAT (RETR SI) (INCLS 8) (NEUTRAL)	97	FP67 (52I)	RH	12453534
		DISCON	BELT KIT, R/SEAT (RETR SI) (INCLS 8) (GRAY)	97	FP67 (10I, 14I, 73I)	RH	12453535
		DISCON	BELT KIT, R/SEAT (RETR SI) (INCLS 8) (NEUTRAL)	97	FP67 (52I)	LH	12453537
		DISCON	BELT KIT, R/SEAT (RETR SI) (INCLS 8) (GRAY)	97	FP67 (10I, 14I, 73I)	LH	12453538
	11-B10	14.875	BELT KIT, R/SEAT (RETR SI) (INCLS 8) (NEUTRAL)	98-02	F67 (AK5, 52I) (EXC AX4)	RH	12453544
	11-B10	14.875	BELT KIT, R/SEAT (RETR SI) (INCLS 8) (GRAY)	98-99	F67 (10I, 14I, 73I) (EXC AX4)	RH	12453545
	11-B10	14.875	BELT KIT, R/SEAT (RETR SI) (INCLS 8) (NEUTRAL)	98-02	F67 (AK5, 52I) (EXC AX4)	LH	12453547
	11-B10	14.875	BELT KIT, R/SEAT (RETR SI) (INCLS 8) (GRAY)	98-99	F67 (10I, 14I, 73I) (EXC AX4)	LH	12453548
	11-B10	14.875	BELT KIT, R/SEAT (RETR SI) (INCLS 8) (PEWTER)	00-02	F67 (AK5, 92I)	RH	12457699
	11-B10	14.875	BELT KIT, R/SEAT (RETR SI) (INCLS 8) (EBONY)	00-02	F67 (AK5, 19I) (EXC AX4)	RH	12457700
	11-B10	14.875	BELT KIT, R/SEAT (RETR SI) (INCLS 8) (EBONY)	00-02	F67 (AK5, 73I)	RH	12457700
	11-B10	14.875	BELT KIT, R/SEAT (RETR SI) (INCLS 8) (PEWTER)	00-02	F67 (AK5, 92I)	LH	12457701
	11-B10	14.875	BELT KIT, R/SEAT (RETR SI) (INCLS 8) (EBONY)	00-02	F67 (AK5, 19I) (EXC AX4)	LH	12457702
	11-B10	14.875	BELT KIT, R/SEAT (RETR SI) (INCLS 8) (EBONY)	00-02	F67 (AK5, 73I)	LH	12457702
	11-B10	14.875	BELT KIT, R/SEAT (RETR SI) (INCLS 8) (GRAY)	96	F67	RH	12524528
2.	11-B10	14.875	COVER, R/SEAT SHLDR BELT RETR TR (GRAY)	96	F67 (14I)	RH	10211817
	11-B10	14.875	COVER, R/SEAT SHLDR BELT RETR TR (GRAPHITE)	96	F67 (12I, 73I)	RH	10211818
	11-B10	14.875	COVER, R/SEAT SHLDR BELT RETR TR (GRAY)	96	F67 (14I)	LH	10213090
	11-B10	14.875	COVER, R/SEAT SHLDR BELT RETR TR (GRAPHITE)	96	F67 (12I, 73I)	LH	10213091
	11-B10	14.875	COVER, R/SEAT SHLDR BELT RETR TR (NEUTRAL)	96-02	F67 (52I)	RH	10272369
	11-B10	14.875	COVER, R/SEAT SHLDR BELT RETR TR (NEUTRAL)	96-02	F67 (52I)	LH	10272370
	11-B10	14.875	COVER, R/SEAT SHLDR BELT RETR TR (GRAY)	97	F67 (10I, 14I, 73I, 92I)	RH	10291379

cardiagn.com

	11-B10	14.875	**COVER**, R/SEAT SHLDR BELT RETR TR (GRAY)	97	F67 (10I, 14I, 73I, 92I)	LH	10291380
	11-B10	14.875	**COVER**, R/SEAT SHLDR BELT RETR TR (GRAY)	98-99	F67 (10I, 14I, 73I)	RH	10291379
	11-B10	14.875	**COVER**, R/SEAT SHLDR BELT RETR TR (GRAY)	98-99	F67 (10I, 14I, 73I)	LH	10291380
	11-B10	14.875	**COVER**, R/SEAT SHLDR BELT RETR TR (EBONY)	00-02	F67 (19I, 73I, 92I)	RH	10409910
	11-B10	14.875	**COVER**, R/SEAT SHLDR BELT RETR TR (EBONY)	00-02	F67 (19I, 73I, 92I)	LH	10409911
	11-B10	14.875	**COVER**, R/SEAT SHLDR BELT RETR TR (EBONY)	02	F67 (19I, 92I)	RH	10409910
	11-B10	14.875	**COVER**, R/SEAT SHLDR BELT RETR TR (EBONY)	02	F67 (19I, 92I)	LH	10409911
3.	11-B10	14.875	**RETAINER**, R/SEAT SHLDR BELT RETR TR CVR (OUTBOARD SI)	96-02	F67	2	10211824
4.		8.900	**BOLT**, HFH M10X1.5X20 9.8 PZOR (R/SEAT BELT (RETR SI))	96-02		2	11508202
5.	11-B10	14.875	**BRACKET**, R/SEAT SHLDR BELT RETR	96-02	F67	RH	10280914
	11-B10	14.875	**BRACKET**, R/SEAT SHLDR BELT RETR	96-02	F67	LH	10280915
6.		8.900	**BOLT**, HEX W/CON WA, M8X1.25X30, 25 THD, 17 OD, 9.8, PO (R/SEAT SHLDR BELT RETR)	96-02		AR	24503695
	11-B10	14.875	**BOLT**, R/SEAT SHLDR BELT RETR (M8X1.25X30, 28.8 THD) (8.900)	96-02			11515659
7.	11-B10	14.875	**BOLT**, R/SEAT SHLDR BELT GDE (6X1X35 TAP 12.75 OD)	96-02	F	4	10138207
	11-B10	14.875	**BOLT**, R/SEAT SHLDR BELT GDE (ROUND HEAD)	96-99	F67	2	16621692
	11-B10	14.875	**BOLT**, R/SEAT SHLDR BELT GDE (ROUND HEAD)	00-02	F67 (AK5)	2	16621692
8.	11-B10	14.875	**GUIDE**, R/SEAT SHLDR BELT (PART OF 1) (GRAPHITE)	96	F67 (12I, 73I, 122)	RH	10253437
	11-B10	14.875	**GUIDE**, R/SEAT SHLDR BELT (PART OF 1) (GRAPHITE)	96	F67 (12I, 73I)	LH	10253438
	11-B10	14.875	**GUIDE**, R/SEAT SHLDR BELT (PART OF 1) (GRAY)	96	F67 (14B)	RH	10253439
	11-B10	14.875	**GUIDE**, R/SEAT SHLDR BELT (PART OF 1) (GRAY)	96	F67 (14B)	LH	10253440
	11-B10	14.875	**GUIDE**, R/SEAT SHLDR BELT (PART OF 1) (NEUTRAL)	96-97	F67 (522, 52B)	RH	16789224
	11-B10	14.875	**GUIDE**, R/SEAT SHLDR BELT (PART OF 1) (NEUTRAL)	96-97	F67 (522, 52B)	LH	16789225
	11-B10	14.875	**GUIDE**, R/SEAT SHLDR BELT (PART OF 1) (GRAY)	97	F67 (10I, 102, 10C, 73B, 142, 143)	RH	16799280
	11-B10	14.875	**GUIDE**, R/SEAT SHLDR BELT (PART OF 1) (GRAY)	97	F67 (14B, 14D, 142, 143, 102, 103)	LH	16799281
	11-B10	14.875	**GUIDE**, R/SEAT SHLDR BELT (PART OF 1) (PEWTER)	97	F67 (92B)	RH	16799282
	11-B10	14.875	**GUIDE**, R/SEAT SHLDR BELT (PART OF 1) (PEWTER)	97	F67 (92B)	LH	16799283
	11-B10	14.875	**GUIDE**, R/SEAT SHLDR BELT (PART OF 1) (NEUTRAL)	98-99	F67 (52B, 52D, 522, 524)	RH	16789224
	11-B10	14.875	**GUIDE**, R/SEAT SHLDR BELT (PART OF 1) (NEUTRAL)	98-99	F67 (52B, 52D, 522, 524)	LH	16789225

cardiagn.com

	11-B10	14.875	GUIDE, R/SEAT SHLDR BELT (PART OF 1) (GRAY)	98-99	F67 (14B, 14D, 73B, 102, 103, 142, 143, 144)	RH	16799280
	11-B10	14.875	GUIDE, R/SEAT SHLDR BELT (PART OF 1) (GRAY)	98-99	F67 (14B, 14D, 73B, 102, 103, 143, 144, 142)	LH	16799281
	11-B10	14.875	GUIDE, R/SEAT SHLDR BELT (PART OF 1) (NEUTRAL)	00-02	F67 (522, 524)	RH	16789224
	11-B10	14.875	GUIDE, R/SEAT SHLDR BELT (PART OF 1) (NEUTRAL)	00-02	F67 (522, 524)	LH	16789225
	11-B10	14.875	GUIDE, R/SEAT SHLDR BELT (PART OF 1) (PEWTER)	00-02	F67 (92B)	RH	16799282
	11-B10	14.875	GUIDE, R/SEAT SHLDR BELT (PART OF 1) (PEWTER)	00-02	F67 (92B)	LH	16799283
	11-B10	14.875	GUIDE, R/SEAT SHLDR BELT (PART OF 1) (EBONY)	00-02	F67 (19I)	RH	16817214
	11-B10	14.875	GUIDE, R/SEAT SHLDR BELT (PART OF 1) (EBONY)	00-02	F67 (73B)	RH	16817214
	11-B10	14.875	GUIDE, R/SEAT SHLDR BELT (PART OF 1) (EBONY)	00-02	F67 (19I)	LH	16817215
	11-B10	14.875	GUIDE, R/SEAT SHLDR BELT (PART OF 1) (EBONY)	00-02	F67 (73B)	LH	16817215
9.	11-B10	14.875	COVER, R/SEAT SHLDR BELT RETR ACC HOLE (GRAY)	96	F67 (14I)	RH	10211822
	11-B10	14.875	COVER, R/SEAT SHLDR BELT RETR ACC HOLE (GRAY)	96	F67 (14I)	LH	10211823
	11-B10	14.875	COVER, R/SEAT SHLDR BELT RETR ACC HOLE (GRAPHITE)	96	F67 (12I, 73I)	LH	10213093
	11-B10	14.875	COVER, R/SEAT SHLDR BELT RETR ACC HOLE (GRAPHITE)	96	F67 (12I, 73I)	RH	10213094
	11-B10	14.875	COVER, R/SEAT SHLDR BELT RETR ACC HOLE (NEUTRAL)	96-02	F67 (52I)	RH	10272371
	11-B10	14.875	COVER, R/SEAT SHLDR BELT RETR ACC HOLE (NEUTRAL)	96-02	F67 (52I)	LH	10272372
	11-B10	14.875	COVER, R/SEAT SHLDR BELT RETR ACC HOLE (GRAY)	97	F67 (10I, 14I, 73I, 92I)	RH	10291381
	11-B10	14.875	COVER, R/SEAT SHLDR BELT RETR ACC HOLE (GRAY)	97	F67 (10I, 14I, 73I, 92I)	LH	10291382
	11-B10	14.875	COVER, R/SEAT SHLDR BELT RETR ACC HOLE (GRAY)	98-99	F67 (10I, 14I, 73I)	LH	10291382
	11-B10	14.875	COVER, R/SEAT SHLDR BELT RETR ACC HOLE (GRAY)	98-99	F67 (10I, 14I, 73I)	RH	10291381
	11-B10	14.875	COVER, R/SEAT SHLDR BELT RETR ACC HOLE (EBONY)	00-02	F67 (19I, 73I, 92I)	RH	10409914
	11-B10	14.875	COVER, R/SEAT SHLDR BELT RETR ACC HOLE (EBONY)	00-01	F67 (19I, 73I, 92I)	LH	10409915
	11-B10	14.875	COVER, R/SEAT SHLDR BELT RETR ACC HOLE (EBONY)	02	F67 (19I, 92I)	RH	10409914
	11-B10	14.875	COVER, R/SEAT SHLDR BELT RETR ACC HOLE (EBONY)	02	F67 (19I, 92I)	LH	10409915
10.	11-B10	14.875	BOLT, R/SEAT SHLDR BELT GDE (6X1X35 TAP 12.75 OD)	96-02	F	4	10138207
	11-B10	14.875	BOLT, R/SEAT SHLDR BELT GDE (ROUND HEAD)	96-99	F67	2	16621692
	11-B10	14.875	BOLT, R/SEAT SHLDR BELT GDE (ROUND HEAD)	00-02	F67 (AK5)	2	16621692
11.	11-B10	14.875	BOLT, R/SEAT SHLDR BELT (M12 X 1.75 X 31) (RD HD)	96-99	F	2	20247398

cardiagn.com

	11-B10	14.875	BOLT, R/SEAT SHLDR BELT (1/2-13X1.7, 0.9 THD, 0.85 OD) (8.913)	97-99	F	AR	9442917
	11-B10	14.875	BOLT, R/SEAT SHLDR BELT (1/2-13X1.7, 0.9 THD, 0.85 OD) (8.913)	00-02	F (AK5)	AR	9442917
	11-B10	14.875	BOLT, R/SEAT SHLDR BELT (M12 X 1.75 X 31) (RD HD)	00-02	F (AK5)	2	20247398
12.	11-B10	14.875	SPACER, R/SEAT BELT (RETR SI) (SLEV BSHG)	96-02	F (AK5)	2	20295278
13.		N.S.	BELT, R/SEAT				
14.	11-B10	14.875	BOLT, R/SEAT BELT (BKL SI) (M12 X 1.75 X 31) (RD HD)	96-99	F	2	20247398
	11-B10	14.875	BOLT, R/SEAT BELT (BKL SI) (1/2-13X1.7, 0.9 THD, 0.85 OD) (8.913)	97-99	F	AR	9442917
	11-B10	14.875	BOLT, R/SEAT BELT (BKL SI) (1/2-13X1.7, 0.9 THD, 0.85 OD) (8.913)	00-02	F (AK5)	AR	9442917
	11-B10	14.875	BOLT, R/SEAT BELT (BKL SI) (M12 X 1.75 X 31) (RD HD)	00-02	F (AK5)	2	20247398
15.	11-N26	13.100	CONNECTOR, INLINE-TO ST BELT SW (BLACK) (2-WAY M W/LEADS) (2.535) (AC-DELCO #PT103)	96-02	F	2	12085481
16.	11-B10	14.875	BELT KIT, D/SEAT (BKL SI) (GRAPHITE)	96	F (AK5, 12I, 73I)	1	12527813
	11-B10	14.875	BELT KIT, D/SEAT (BKL SI) (GRAY)	96	F (AK5, 14I)	1	12527815
	11-B10	14.875	BELT KIT, D/SEAT (BKL SI) (NEUTRAL)	96-97	F (AK5, 52I)	1	12527817
	11-B10	14.875	BELT KIT, D/SEAT (BKL SI) (GRAY)	97	F (AK5, 10I, 14I, 73I)	1	12530545
	11-B10	14.875	BELT KIT, D/SEAT (BKL SI) (PEWTER)	97	F (AK5, 92I)	1	12530546
	11-B10	14.875	BELT KIT, D/SEAT (BKL SI) (NEUTRAL)	98-02	F (AK5, 52I) (EXC AX4)	1	12369441
	11-B10	14.875	BELT KIT, D/SEAT (BKL SI) (GRAY)	98-99	F (AK5, 10I, 14I) (EXC AX4)	1	12369442
	11-B10	14.875	BELT KIT, D/SEAT (BKL SI) (GRAY)	98-99	F (AK5, 73I)	1	12369442
	11-B10	14.875	BELT KIT, D/SEAT (BKL SI) (PEWTER)	98	F (AK5, 92I)	1	12369443
	11-B10	14.875	BELT KIT, D/SEAT (BKL SI) (PEWTER)	00-02	F (AK5, 92I)	1	12457683
	11-B10	14.875	BELT KIT, D/SEAT (BKL SI) (EBONY)	00-02	F (AK5, 19I) (EXC AX4)	1	12457684
	11-B10	14.875	BELT KIT, D/SEAT (BKL SI) (EBONY)	00-02	F (AK5, 73I)	1	12457684
	11-B10	14.875	BELT KIT, P/SEAT (BKL SI) (GRAPHITE)	96	F (AK5, 12I, 73I)	1	12527812
	11-B10	14.875	BELT KIT, P/SEAT (BKL SI) (GRAY)	96	F (AK5, 14I)	1	12527814
	11-B10	14.875	BELT KIT, P/SEAT (BKL SI) (NEUTRAL)	96-97	F (AK5, 52I)	1	12527816
	11-B10	14.875	BELT KIT, P/SEAT (BKL SI) (GRAY)	97	F (AK5, 10I, 14I, 73I)	1	12530542

cardiagn.com

	11-B10	14.875	BELT KIT, P/SEAT (BKL SI) (PEWTER)	97	F (AK5, 92I)	1	12530543
	11-B10	14.875	BELT KIT, P/SEAT (BKL SI) (NEUTRAL)	98-02	F (AK5, 52I) (EXC AX4)	1	12369438
	11-B10	14.875	BELT KIT, P/SEAT (BKL SI) (GRAY)	98-99	F (AK5, 10I, 14I) (EXC AX4)	1	12369439
	11-B10	14.875	BELT KIT, P/SEAT (BKL SI) (GRAY)	98-99	F (AK5, 73I)	1	12369439
	11-B10	14.875	BELT KIT, P/SEAT (BKL SI) (PEWTER)	98	F (AK5, 92I)	1	12369440
	11-B10	14.875	BELT KIT, P/SEAT (BKL SI) (PEWTER)	00-02	F (AK5, 92I)	1	12457687
	11-B10	14.875	BELT KIT, P/SEAT (BKL SI) (EBONY)	00-02	F (AK5, 19I) (EXC AX4)	1	12457688
	11-B10	14.875	BELT KIT, P/SEAT (BKL SI) (EBONY)	00-02	F (AK5, 73I)	1	12457688
	11-B10	14.875	BELT KIT, D/SEAT (BKL SI) (GRAY)	98-99	F (AK5, AX4, 10I, 14I) (EXPORT)	1	10402203
	11-B10	14.875	BELT KIT, P/SEAT (BKL SI) (GRAY)	98-99	F (AK5, AX4, 10I, 14I) (EXPORT)	1	10402202
17.	11-B10	14.875	BOLT, D/SEAT BELT (BKL SI) (M12 X 1.75 X 31) (RD HD)	96-02	F (AK5)	1	20247398
	11-B10	14.875	BOLT, D/SEAT BELT (BKL SI) (1/2-13X1.7, 0.9 THD, 0.85 OD) (8.913)	97-02	F (AK5)	AR	9442917
	11-B10	14.875	BOLT, P/SEAT BELT (BKL SI) (M12 X 1.75 X 31) (RD HD)	96-02	F (AK5)	1	20247398
	11-B10	14.875	BOLT, P/SEAT BELT (BKL SI) (1/2-13X1.7, 0.9 THD, 0.85 OD) (8.913)	97-02	F (AK5)	AR	9442017
18.	11-B10	14.875	PLUG, D/SEAT BELT BOLT ACC HOLE (BKL SI) (GRAY)	96	F (AK5, 14I)	1	10170895
	11-B10	14.875	PLUG, D/SEAT BELT BOLT ACC HOLE (BKL SI) (GRAPHITE)	96	F (AK5, 12I, 73I)	1	10170897
	11-B10	14.875	PLUG, D/SEAT BELT BOLT ACC HOLE (BKL SI) (NEUTRAL)	96-02	F (AK5, 52I)	1	3544855
	11-B10	14.875	PLUG, D/SEAT BELT BOLT ACC HOLE (BKL SI) (GRAY)	97-99	F (AK5, 10I, 14I, 73I)	1	25638638
	11-B10	14.875	PLUG, D/SEAT BELT BOLT ACC HOLE (BKL SI) (PEWTER)	97	F (AK5, 92I)	1	25639434
	11-B10	14.875	PLUG, D/SEAT BELT BOLT ACC HOLE (BKL SI) (PEWTER)	00-02	F (AK5, 92I)	1	25639434
	11-B10	14.875	PLUG, D/SEAT BELT BOLT ACC HOLE (BKL SI) (EBONY)	00-02	F (AK5, 19I)	1	25689295
	11-B10	14.875	PLUG, D/SEAT BELT BOLT ACC HOLE (BKL SI) (EBONY)	00-02	F (AK5, 19I, 73I)	1	25689295
	11-B10	14.875	PLUG, P/SEAT BELT BOLT ACC HOLE (BKL SI) (GRAY)	96	F (AK5, 14I)	1	10170895
	11-B10	14.875	PLUG, P/SEAT BELT BOLT ACC HOLE (BKL SI) (GRAPHITE)	96	F (AK5, 12I, 73I)	1	10170897
	11-B10	14.875	PLUG, P/SEAT BELT BOLT ACC HOLE (BKL SI) (NEUTRAL)	96-02	F (AK5, 52I)	1	3544855
	11-B10	14.875	PLUG, P/SEAT BELT BOLT ACC HOLE (BKL SI) (GRAY)	97-99	F (AK5, 10I, 14I, 73I)	1	25638638
	11-B10	14.875	PLUG, P/SEAT BELT BOLT ACC HOLE (BKL SI) (PEWTER)	97-98	F (AK5, 92I)	1	25639434
	11-B10	14.875	PLUG, P/SEAT BELT BOLT ACC HOLE (BKL SI) (PEWTER)	00-02	F (AK5, 92I)	1	25639434

cardiagn.com

	11-B10	14.875	PLUG, P/SEAT BELT BOLT ACC HOLE (BKL SI) (EBONY)	00-02	F (AK5, 73I)	1	25689295
19.	11-B10	14.875	PLUG, D/SEAT BELT BOLT ACC HOLE (RETR SI) (GRAPHITE)	96	F (AK5, 12I, 73I)	1	10170897
	11-B10	14.875	PLUG, D/SEAT BELT BOLT ACC HOLE (RETR SI) (NEUTRAL)	96-02	F (AK5, 52I)	1	3544855
	11-B10	14.875	PLUG, D/SEAT BELT BOLT ACC HOLE (RETR SI) (GRAY)	96	F (AK5, 14I)	1	10170895
	11-B10	14.875	PLUG, D/SEAT BELT BOLT ACC HOLE (RETR SI) (GRAY)	97-99	F (AK5, 10I, 14I, 73I) ...	1	25638638
	11-B10	14.875	PLUG, D/SEAT BELT BOLT ACC HOLE (RETR SI) (PEWTER)	97	F (AK5, 92I)	1	25639434
	11-B10	14.875	PLUG, D/SEAT BELT BOLT ACC HOLE (RETR SI) (PEWTER)	00-02	F (AK5, 92I)	1	25639434
	11-B10	14.875	PLUG, D/SEAT BELT BOLT ACC HOLE (RETR SI) (EBONY)	00-02	F (AK5, 73I)	1	25689295
	11-B10	14.875	PLUG, P/SEAT BELT BOLT ACC HOLE (RETR SI) (GRAY)	96	F (AK5, 14I)	1	10170895
	11-B10	14.875	PLUG, P/SEAT BELT BOLT ACC HOLE (RETR SI) (GRAPHITE)	96	F (AK5, 12I, 73I)	1	10170897
	11-B10	14.875	PLUG, P/SEAT BELT BOLT ACC HOLE (RETR SI) (NEUTRAL)	96-02	F (AK5, 52I)	1	3544855
	11-B10	14.875	PLUG, P/SEAT BELT BOLT ACC HOLE (RETR SI) (GRAY)	97-99	F (AK5, 10I, 14I, 73I) ...	1	25638638
	11-B10	14.875	PLUG, P/SEAT BELT BOLT ACC HOLE (RETR SI) (PEWTER)	97-98	F (AK5, 92I)	1	25639434
	11-B10	14.875	PLUG, P/SEAT BELT BOLT ACC HOLE (RETR SI) (PEWTER)	00-02	F (AK5, 92I)	1	25639434
	11-B10	14.875	PLUG, P/SEAT BELT BOLT ACC HOLE (RETR SI) (EBONY)	00-02	F (AK5, 73I)	1	25689295
20.	11-B10	14.875	BOLT, D/SEAT BELT (RETR SI) (M12 X 1.75 X 31) (RD HD)	96-02	F (AK5)	1	20247398
	11-B10	14.875	BOLT, D/SEAT BELT (RETR SI) (1/2-13X1.7, 0.9 THD, 0.85 OD) (8.913)	97-02	F (AK5)	AR	9442917
	11-B10	14.875	BOLT, P/SEAT BELT (RETR SI) (M12 X 1.75 X 31) (RD HD)	96-02	F (AK5)	1	20247398
	11-B10	14.875	BOLT, P/SEAT BELT (RETR SI) (1/2-13X1.7, 0.9 THD, 0.85 OD) (8.913)	97-02	F (AK5)	AR	9442917
21.	11-B10	14.875	BELT KIT, D/SEAT (RETR SI) (INCLS 23) (GRAPHITE)	96	F67 (AK5, 12I, 73I)	1	12527825
	11-B10	14.875	BELT KIT, D/SEAT (RETR SI) (INCLS 23) (GRAY)	96	F67 (AK5, 14I)	1	12527827
	11-B10	14.875	BELT KIT, D/SEAT (RETR SI) (INCLS 23) (NEUTRAL)	96	F67 (AK5, 52I)	1	12527829
	11-B10	14.875	BELT KIT, D/SEAT (RETR SI) (INCLS 23) (NEUTRAL)	97	F67 (AK5, 52I) (EXC AX4)	1	12369387
	11-B10	14.875	BELT KIT, D/SEAT (RETR SI) (INCLS 23) (GRAY)	97	F67 (AK5, 10I, 14I, 73I) .	1	12369388
	11-B10	14.875	BELT KIT, D/SEAT (RETR SI) (INCLS 23) (PEWTER)	97	F67 (AK5, 92I)	1	12369389
	11-B10	14.875	BELT KIT, D/SEAT (RETR SI) (INCLS 23) (GRAY)	98-99	F67 (AK5, 10I, 14I) (EXC AX4)	1	12369454
	11-B10	14.875	BELT KIT, D/SEAT (RETR SI) (INCLS 23) (GRAY)	98-99	F67 (AK5, 73I)	1	12369454
	11-B10	14.875	BELT KIT, D/SEAT (RETR SI) (INCLS 23) (PEWTER)	98	F67 (AK5, 92I)	1	12369455

cardiagn.com

	11-B10	14.875	BELT KIT, D/SEAT (RETR SI) (INCLS 23) (NEUTRAL)	98-02	F67 (AK5, 52I) (EXC AX4)	1	88896037
	11-B10	14.875	BELT KIT, D/SEAT (RETR SI) (INCLS 23) (PEWTER)	00-02	F67 (AK5, 92I)	1	12457693
	11-B10	14.875	BELT KIT, D/SEAT (RETR SI) (INCLS 23) (EBONY)	00-02	F67 (AK5, 19I) (EXC AX4)	1	88896039
	11-B10	14.875	BELT KIT, D/SEAT (RETR SI) (INCLS 23) (EBONY)	00-01	F67 (AK5, 73I)	1	88896039
	11-B10	14.875	BELT KIT, P/SEAT (RETR SI) (INCLS 23) (GRAPHITE)	96	F67 (AK5, 12I, 73I)	1	12527824
	11-B10	14.875	BELT KIT, P/SEAT (RETR SI) (INCLS 23) (GRAY)	96	F67 (AK5, 14I)	1	12527826
	11-B10	14.875	BELT KIT, P/SEAT (RETR SI) (INCLS 23) (NEUTRAL)	96	F67 (AK5, 52I)	1	12527828
	11-B10	14.875	BELT KIT, P/SEAT (RETR SI) (INCLS 23) (NEUTRAL)	97	F67 (AK5, 52I)	1	12369384
	11-B10	14.875	BELT KIT, P/SEAT (RETR SI) (INCLS 23) (GRAY)	97	F67 (AK5, 10I, 14I, 73I)	1	12369385
	11-B10	14.875	BELT KIT, P/SEAT (RETR SI) (INCLS 23) (PEWTER)	97	F67 (AK5, 92I)	1	12530561
	11-B10	14.875	BELT KIT, P/SEAT (RETR SI) (INCLS 23) (GRAY)	98-99	F67 (AK5, 10I, 14I) (EXC AX4)	1	12369451
	11-B10	14.875	BELT KIT, P/SEAT (RETR SI) (INCLS 23) (GRAY)	98-99	F67 (AK5, 73I)	1	12369451
	11-B10	14.875	BELT KIT, P/SEAT (RETR SI) (INCLS 23) (NEUTRAL)	98-02	F67 (AK5, 52I) (EXC AX4)	1	88896034
	11-B10	14.875	BELT KIT, P/SEAT (RETR SI) (INCLS 23) (PEWTER)	00-02	F67 (AK5, 92I)	1	12457697
	11-B10	14.875	BELT KIT, P/SEAT (RETR SI) (INCLS 23) (EBONY)	00-02	F67 (AK5, 19I) (EXC AX4)	1	88896036
	11-B10	14.875	BELT KIT, P/SEAT (RETR SI) (INCLS 23) (EBONY)	00-01	F67 (AK5, 73I)	1	88896036
	11-B10	14.875	BELT KIT, P/SEAT (RETR SI) (INCLS 23) (GRAY)	98-99	F67 (AK5, AX4, 10I, 14I) (EXPORT)	1	10402230
22.	11-B10	14.875	BOLT, D/SEAT SHLDR BELT RETR (M12 X 1.75 X 30)	96-02	F67 (AK5)	1	20247145
	11-B10	14.875	BOLT, D/SEAT SHLDR BELT RETR (1/2X13X1.08)	96-02	F67 (AK5)	AR	10225190
	11-B10	14.875	BOLT, P/SEAT SHLDR BELT RETR (M12 X 1.75 X 30)	96-02	F67 (AK5)	1	20247145
	11-B10	14.875	BOLT, P/SEAT SHLDR BELT RETR (1/2X13X1.08)	97-02	F67 (AK5)	AR	10225190
	11-B10	14.875	BOLT, P/SEAT SHLDR BELT RETR (M8X1.25X20, 20 THD) (8.977)	02	F67 (AK5)	2	11516671
23.		N.S.	RETAINER, D/SEAT SHLDR BELT (PART OF 21)				
		N.S.	RETAINER, P/SEAT SHLDR BELT (PART OF 21)				
24.		8.977	SCREW, OV HD C/R W/TR WA, M4.2X1.41X20, NZ (D/SEAT SHLDR BELT GDE)	96-02		AR	11516665
	11-B10	14.875	BOLT, P/SEAT SHLDR BELT GDE (M12 X 1.75 X 30)	96-02	F67 (AK5)	1	20247145
	11-B10	14.875	BOLT, P/SEAT SHLDR BELT GDE (1/2X13X1.08)	96-02	F67 (AK5)	AR	10225190
	11-B10	14.875	BOLT, P/SEAT SHLDR BELT GDE (M4.2X1.41X20, NZ) (8.977)	97	F (AR9)	2	11516665

cardiagn.com

	11-B10	14.875	BOLT, P/SEAT SHLDR BELT GDE (M4.2X1.41X35) (8.977)	98-02	F (AQ9, AR9)	2	11514957
	11-B10	14.875	BOLT, P/SEAT SHLDR BELT GDE (M4.2X1.41X20, NZ) (8.977)	00-02	F (AR9)	2	11516665
	11-B10	14.875	BOLT, D/SEAT SHLDR BELT GDE (M12 X 1.75 X 30)	96-02	F67 (AK5)	1	20247145
	11-B10	14.875	BOLT, D/SEAT SHLDR BELT GDE (1/2X13X1.08)	96-02	F67 (AK5)	AR	10225190
	11-B10	14.875	BOLT, D/SEAT SHLDR BELT GDE (M4.2X1.41X20, NZ) (8.977)	98-02	F	2	11516665
	11-B10	14.875	BOLT, D/SEAT SHLDR BELT GDE (M4.2X1.41X35) (8.977)	99-00	F	2	11514957
	11-B10	14.875	BOLT, D/SEAT SHLDR BELT GDE (M4.2X1.41X35, 25, THD) (8.900)	01-02	F (AQ9, AR9)	2	11514940
25.	11-B10	14.875	GUIDE, R/SEAT SHLDR BELT (GRAPHITE)	96	F67 (12I, 73I, 122)	RH	10253437
	11-B10	14.875	GUIDE, R/SEAT SHLDR BELT (GRAPHITE)	96	F67 (12I, 73I)	LH	10253438
	11-B10	14.875	GUIDE, R/SEAT SHLDR BELT (GRAY)	96	F67 (14B)	RH	10253439
	11-B10	14.875	GUIDE, R/SEAT SHLDR BELT (GRAY)	96	F67 (14B)	LH	10253440
	11-B10	14.875	GUIDE, R/SEAT SHLDR BELT (NEUTRAL)	96-97	F67 (522, 52B)	RH	16789224
	11-B10	14.875	GUIDE, R/SEAT SHLDR BELT (NEUTRAL)	96-97	F67 (522, 52B)	LH	16789225
	11-B10	14.875	GUIDE, R/SEAT SHLDR BELT (GRAY)	97	F67 (103, 102, 10C, 73B, 142, 143)	RH	16799280
	11-B10	14.875	GUIDE, R/SEAT SHLDR BELT (GRAY)	97	F67 (14B, 14D, 142, 143, 102, 103)	LH	16799281
	11-B10	14.875	GUIDE, R/SEAT SHLDR BELT (PEWTER)	97	F67 (92B)	RH	16799282
	11-B10	14.875	GUIDE, R/SEAT SHLDR BELT (PEWTER)	97	F67 (92B)	LH	16799283
	11-B10	14.875	GUIDE, R/SEAT SHLDR BELT (NEUTRAL)	98-99	F67 (52B, 52D, 522, 524)	RH	16789224
	11-B10	14.875	GUIDE, R/SEAT SHLDR BELT (NEUTRAL)	98-99	F67 (52B, 52D, 522, 524)	LH	16789225
	11-B10	14.875	GUIDE, R/SEAT SHLDR BELT (GRAY)	98-99	F67 (14B, 14D, 73B, 102, 103, 142, 143, 144)	RH	16799280
	11-B10	14.875	GUIDE, R/SEAT SHLDR BELT (GRAY)	98-99	F67 (14B, 14D, 73B, 102, 103, 143, 144, 142)	LH	16799281
	11-B10	14.875	GUIDE, R/SEAT SHLDR BELT (NEUTRAL)	00-02	F67 (522, 524)	RH	16789224
	11-B10	14.875	GUIDE, R/SEAT SHLDR BELT (NEUTRAL)	00-02	F67 (522, 524)	LH	16789225
	11-B10	14.875	GUIDE, R/SEAT SHLDR BELT (PEWTER)	00-02	F67 (92B)	RH	16799282
	11-B10	14.875	GUIDE, R/SEAT SHLDR BELT (PEWTER)	00-02	F67 (92B)	LH	16799283
	11-B10	14.875	GUIDE, R/SEAT SHLDR BELT (EBONY)	00-02	F67 (19I)	RH	16817214
	11-B10	14.875	GUIDE, R/SEAT SHLDR BELT (EBONY)	00-02	F67 (73B)	RH	16817214

cardiagn.com

11-B10	14.875	GUIDE, R/SEAT SHLDR BELT (EBONY)	00-02	F67 (19I)	LH	16817215
11-B10	14.875	GUIDE, R/SEAT SHLDR BELT (EBONY)	00-02	F67 (73B)	LH	16817215

RPO DEFINITIONS

AK5 – RESTRAINT SYSTEM,FRONT SEAT,INFLATABLE,DRIVER AND PASSENGER
AQ9 – SEAT,FRONT BUCKET,DRIVER,PASSENGER,RECLINING
AR9 – SEAT,FRONT BUCKET,DRIVER,PASSENGER,MANUAL RECLINING(EUROPEAN STYLE)
AX4 – RESTRAINT SYSTEM,FRONT AND REAR SEAT,MANUAL(EUROPEAN)
10C – TRIM COMBINATION CLOTH, ARCTIC WHITE (97)
10I – INTERIOR TRIM– ARCTIC WHITE
102 – TRIM COMBINATION LEATHER, ARCTIC WHITE (2) (94)
103 – TRIM COMBINATION– LEATHER,ARCTIC WHITE
12I – INTERIOR TRIM GRAPHITE
122 – TRIM COMBINATION LEATHER,GRAPHITE
14B – TRIM COMBINATION – CLOTH, DK GRAY
14D – TRIM COMBINATION CLOTH, LT GRAY
14I – INTERIOR TRIM LT GRAY
142 – TRIM COMBINATION LEATHER, LT GRAY
143 – TRIM COMBINATION,LEATHER, LT GRAY
144 – TRIM COMBINATION LEATHER, LT GRAY
19I – INTERIOR TRIM,BLACK
52B – TRIM COMBINATION CLOTH, LT NEUTRAL
52D – TRIM COMBINATION CLOTH, NEUTRAL
52I – INTERIOR TRIM LIGHT NEUTRAL
522 – TRIM COMBINATION – LEATHER, NEUTRAL
524 – TRIM COMBINATION LEATHER, NEUTRAL
73B – TRIM COMBINATION,CLOTH,FLAME RED
73I – INTERIOR TRIM,FLAME RED
92B – TRIM COMBINATION CLOTH, SHALE/PEWTER
92I – INTERIOR TRIM SHALE/PEWTER

cardiagn.com

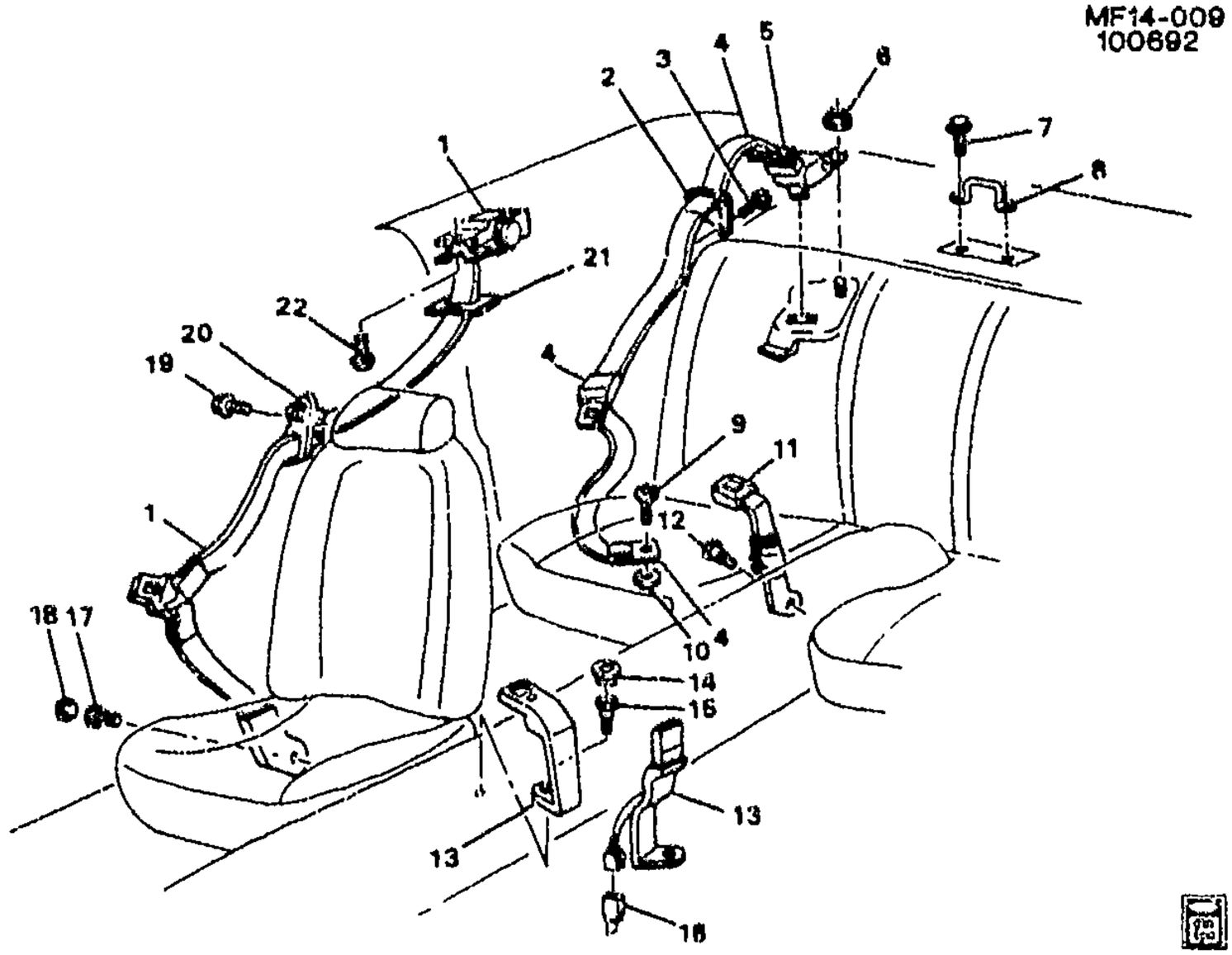

MF14-0091

1997-2002 F87 SEAT BELT HARDWARE

1.	11-B10	14.875	BELT KIT, D/SEAT (RETR SI) (INCLS 21) (NEUTRAL)	97	F87 (AK5, 52I)	1	12527823
	11-B10	14.875	BELT KIT, D/SEAT (RETR SI) (INCLS 21) (GRAY)	97	F87 (AK5, 10I, 14I, 73I) .	1	12530553
	11-B10	14.875	BELT KIT, D/SEAT (RETR SI) (INCLS 21) (PEWTER)	97	F87 (AK5, 92I)	1	12530555
	11-B10	14.875	BELT KIT, D/SEAT (RETR SI) (INCLS 21) (GRAY)	98-99	F87 (AK5, 10I, 14I) (EXC AX4)	1	12369448
	11-B10	14.875	BELT KIT, D/SEAT (RETR SI) (INCLS 21) (GRAY)	98-99	F87 (AK5, 73I)	1	12369448
	11-B10	14.875	BELT KIT, D/SEAT (RETR SI) (INCLS 21) (PEWTER)	98	F87 (AK5, 92I)	1	12369449
	11-B10	14.875	BELT KIT, D/SEAT (RETR SI) (INCLS 21) (NEUTRAL)	98-02	F87 (AK5, 52I) (EXC AX4)	1	88896026
	11-B10	14.875	BELT KIT, D/SEAT (RETR SI) (INCLS 21) (PEWTER)	00-02	F87 (AK5, 92I)	1	12457685
	11-B10	14.875	BELT KIT, D/SEAT (RETR SI) (INCLS 21) (BLACK)	00-02	F87 (AK5, 19I) (EXC AX4)	1	88896028
	11-B10	14.875	BELT KIT, D/SEAT (RETR SI) (INCLS 21) (BLACK)	00-01	F87 (AK5, 73I)	1	88896028
	11-B10	14.875	BELT KIT, P/SEAT (RETR SI) (INCLS 21) (NEUTRAL)	97	F87 (AK5, 52I)	1	12527822
	11-B10	14.875	BELT KIT, P/SEAT (RETR SI) (INCLS 21) (GRAY)	97	F87 (AK5, 10I, 14I, 73I) .	1	12530550
	11-B10	14.875	BELT KIT, P/SEAT (RETR SI) (INCLS 21) (PEWTER)	97	F87 (AK5, 92I)	1	12530672

cardiagn.com

	11-B10	14.875	BELT KIT, P/SEAT (RETR SI) (INCLS 21) (NEUTRAL)	98-02	F87 (AK5, 52I) (EXC AX4)	1	12369444
	11-B10	14.875	BELT KIT, P/SEAT (RETR SI) (INCLS 21) (GRAY)	98-99	F87 (AK5, 10I, 14I) (EXC AX4)	1	12369445
	11-B10	14.875	BELT KIT, P/SEAT (RETR SI) (INCLS 21) (GRAY)	98-99	F87 (AK5, 73I)	1	12369445
	11-B10	14.875	BELT KIT, P/SEAT (RETR SI) (INCLS 21) (PEWTER)	98	F87 (AK5, 92I)	1	12369446
	11-B10	14.875	BELT KIT, P/SEAT (RETR SI) (INCLS 21) (PEWTER)	00-02	F87 (AK5, 92I)	1	12457695
	11-B10	14.875	BELT KIT, P/SEAT (RETR SI) (INCLS 21) (EBONY)	00-02	F87 (AK5, 19I) (EXC AX4)	1	12457696
	11-B10	14.875	BELT KIT, P/SEAT (RETR SI) (INCLS 21) (EBONY)	00-02	F87 (AK5, 73I)	1	12457696
	11-B10	14.875	BELT KIT, P/SEAT (RETR SI) (INCLS 21) (GRAY)	98-99	F87 (AK5, AX4, 10I, 14I) (EXPORT)	1	10402216
2.		N.S.	GUIDE, R/SEAT SHLDR BELT (PART OF 4)		.....		
3.	11-B10	14.875	BOLT, R/SEAT SHLDR BELT GDE (6X1X35 TAP 12.75 OD)	97-02	F	4	10138207
4.	11-B10	14.875	BELT KIT, R/SEAT (RETR SI) (INCLS 2, 5, 11) (GRAY) (7 PANEL WEBBING)	97	F (10I, 14I, 73I)	LH	12369380
	11-B10	14.875	BELT KIT, R/SEAT (RETR SI) (INCLS 2, 5, 11) (NEUTRAL) (7 PANEL WEBBING)	97	F87 (52I)	RH	12369376
	11-B10	14.875	BELT KIT, R/SEAT (RETR SI) (INCLS 2, 5, 11) (GRAY)	97	F87 (10I, 14I, 73I)	RH	12369377
	11-B10	14.875	BELT KIT, R/SEAT (RETR SI) (INCLS 2, 5, 11) (NEUTRAL) (7 PANEL WEBBING)	97	F87 (52I)	LH	12369379
	11-B10	14.875	BELT KIT, R/SEAT (RETR SI) (INCLS 2, 5, 11) (PEWTER)	97	F87 (92I)	RH	12530754
	11-B10	14.875	BELT KIT, R/SEAT (RETR SI) (INCLS 2, 5, 11) (NEUTRAL)	98-02	F87 (AK5, 52I) (EXC AX4)	RH	12453528
	11-B10	14.875	BELT KIT R/SEAT (RETR SI) (INCLS 2, 5, 11) (GRAY)	98-02	F87 (10I, 14I, 73I) (EXC AX4)	RH	12453529
	11-B10	14.875	BELT KIT, R/SEAT (FETR SI) (INCLS 2, 5, 11) (NEUTRAL)	98-02	F87 (AK5, 52I) (EXC AX4)	LH	12453531
	11-B10	14.875	BELT KIT, R/SEAT (RETR SI) (INCLS 2, 5, 11) (GRAY)	98-02	F87 (10I, 14I, 73I) (EXC AX4)	LH	12453532
	11-B10	14.875	BELT KIT, R/SEAT (RETR SI) (INCLS 2, 5, 11) (PEWTER)	00-02	F87 (AK5, 92I)	RH	12457689
	11-B10	14.875	BELT KIT, R/SEAT (RETR SI) (INCLS 2, 5, 11) (EBONY)	00-02	F87 (AK5, 19I) (EXC AX4)	RH	12457690
	11-B10	14.875	BELT KIT, R/SEAT (RETR SI) (INCLS 2, 5, 11) (EBONY)	00-01	F87 (AK5, 73I)	RH	12457690
	11-B10	14.875	BELT KIT, R/SEAT (RETR SI) (INCLS 2, 5, 11) (PEWTER)	00-02	F87 (AK5, 92I)	LH	12457691
	11-B10	14.875	BELT KIT, R/SEAT (RETR SI) (INCLS 2, 5, 11) (EBONY)	00-02	F87 (AK5, 19I) (EXC AX4)	LH	12457692
	11-B10	14.875	BELT KIT, R/SEAT (RETR SI) (INCLS 2, 5, 11) (EBONY)	00-01	F87 (AK5, 73I)	LH	12457692
5.		N.S.	BEZEL, R/SEAT SHLDR BELT OPG (PART OF 4)		.....		
6.	11-B10	14.875	NUT, R/SEAT SHLDR BELT RETR (M12X1.75X12 (10) 1050) (8.917)	97-02	F87	2	11508101

cardiagn.com

7.		8.900	BOLT, M6X1X12, 10 THD, 11.6 OD, 9.8 GM500-M, POR, MACH (PART OF 8) (AC-DELCO #11514149)	97-02		4	11514149
8.	11-B10	14.870	BELT KIT, CHILD ST RST SYS (INCLS 7)	97-02	F (Z49) (EXPORT)	2	10251104
9.	11-B10	14.875	BOLT, R/SEAT SHLDR BELT (M12 X 1.75 X 31) (RD HD)	97-99	F	2	20247398
	11-B10	14.875	BOLT, R/SEAT SHLDR BELT (1/2-13X1.7, 0.9 THD, 0.85 OD) (8.913)	97-99	F	AR	9442917
	11-B10	14.875	BOLT, R/SEAT SHLDR BELT (1/2-13X1.7, 0.9 THD, 0.85 OD) (8.913)	00-02	F (AK5)	AR	9442917
	11-B10	14.875	BOLT, R/SEAT SHLDR BELT (M12 X 1.75 X 31) (RD HD)	00-02	F (AK5)	2	20247398
10.	11-B10	14.875	SPACER, R/SEAT BELT (RETR SI) (SLEV BSHG)	97-02	F (AK5)	2	20295278
11.		N.S.	BELT, R/SEAT (BKL SI) (PART OF 4)				
12.	11-B10	14.875	BOLT, R/SEAT BELT (BKL SI) (M12 X 1.75 X 31) (RD HD)	97-99	F	2	20247398
	11-B10	14.875	BOLT, R/SEAT BELT (BKL SI) (1/2-13X1.7, 0.9 THD, 0.85 OD) (8.913)	97-99	F	AR	9442917
	11-B10	14.875	BOLT, R/SEAT BELT (BKL SI) (1/2-13X1.7, 0.9 THD, 0.85 OD) (8.913)	00-02	F (AK5)	AR	9442917
	11-B10	14.875	BOLT, R/SEAT BELT (BKL SI) (M12 X 1.75 X 31) (RD HD)	00-02	F (AK5)	2	20247398
13.	11-B10	14.875	BELT KIT, D/SEAT (BKL SI) (NEUTRAL)	97	F (AK5, 52I)	1	12527817
	11-B10	14.875	BELT KIT, D/SEAT (BKL SI) (GRAY)	97	F (AK5, 10I, 14I, 73I)	1	12530545
	11-B10	14.875	BELT KIT, D/SEAT (BKL SI) (PEWTER)	97	F (AK5, 92I)	1	12530546
	11-B10	14.875	BELT KIT, D/SEAT (BKL SI) (NEUTRAL)	98-02	F (AK5, 52I) (EXC AX4)	1	12369441
	11-B10	14.875	BELT KIT, D/SEAT (BKL SI) (GRAY)	98-99	F (AK5, 10I, 14I) (EXC AX4)	1	12369442
	11-B10	14.875	BELT KIT, D/SEAT (BKL SI) (GRAY)	98-99	F (AK5, 73I)	1	12369442
	11-B10	14.875	BELT KIT, D/SEAT (BKL SI) (PEWTER)	98	F (AK5, 92I)	1	12369443
	11-B10	14.875	BELT KIT, D/SEAT (BKL SI) (PEWTER)	00-02	F (AK5, 92I)	1	12457683
	11-B10	14.875	BELT KIT, D/SEAT (BKL SI) (EBONY)	00-02	F (AK5, 19I) (EXC AX4)	1	12457684
	11-B10	14.875	BELT KIT, D/SEAT (BKL SI) (EBONY)	00-02	F (AK5, 73I)	1	12457684
	11-B10	14.875	BELT KIT, P/SEAT (BKL SI) (NEUTRAL)	97	F (AK5, 52I)	1	12527818
	11-B10	14.875	BELT KIT, P/SEAT (BKL SI) (GRAY)	97	F (AK5, 10I, 14I, 73I)	1	12530542
	11-B10	14.875	BELT KIT, P/SEAT (BKL SI) (PEWTER)	97	F (AK5, 92I)	1	12530543
	11-B10	14.875	BELT KIT, P/SEAT (BKL SI) (NEUTRAL)	98-02	F (AK5, 52I) (EXC AX4)	1	12369438

cardiagn.com

	11-B10	14.875	BELT KIT, P/SEAT (BKL SI) (GRAY)	98-99	F (AK5, 10I, 14I) (EXC AX4)	1	12369439
	11-B10	14.875	BELT KIT, P/SEAT (BKL SI) (GRAY)	98-99	F (AK5, 73I)	1	12369439
	11-B10	14.875	BELT KIT, P/SEAT (BKL SI) (PEWTER)	98	F (AK5, 92I)	1	12369440
	11-B10	14.875	BELT KIT, P/SEAT (BKL SI) (PEWTER)	00-02	F (AK5, 92I)	1	12457687
	11-B10	14.875	BELT KIT, P/SEAT (BKL SI) (EBONY)	00-02	F (AK5, 19I) (EXC AX4)	1	12457688
	11-B10	14.875	BELT KIT, P/SEAT (BKL SI) (EBONY)	00-02	F (AK5, 73I)	1	12457688
	11-B10	14.875	BELT KIT, D/SEAT (BKL SI) (GRAY)	98-99	F (AK5, AX4, 10I, 14I) (EXPORT)	1	10402203
	11-B10	14.875	BELT KIT, P/SEAT (BKL SI) (GRAY)	98-99	F (AK5, AX4, 10I, 14I) (EXPORT)	1	10402202
14.	11-B10	14.875	PLUG, D/SEAT BELT BOLT ACC HOLE (BKL SI) (NEUTRAL)	97-02	F (AK5, 52I)	1	3544855
	11-B10	14.875	PLUG, D/SEAT BELT BOLT ACC HOLE (BKL SI) (GRAY)	97-99	F (AK5, 10I, 14I, 73I)	1	25638638
	11-B10	14.875	PLUG, D/SEAT BELT BOLT ACC HOLE (BKL SI) (PEWTER)	97	F (AK5, 92I)	1	25639434
	11-B10	14.875	PLUG, D/SEAT BELT BOLT ACC HOLE (BKL SI) (PEWTER)	00-02	F (AK5, 92I)	1	25639434
	11-B10	14.875	PLUG, D/SEAT BELT BOLT ACC HOLE (BKL SI) (EBONY)	00-02	F (AK5, 19I)	1	25689295
	11-B10	14.875	PLUG, D/SEAT BELT BOLT ACC HOLE (BKL SI) (EBONY)	00-02	F (AK5, 19I, 73I)	1	25689295
	11-B10	14.875	PLUG, P/SEAT BELT BOLT ACC HOLE (BKL SI) (NEUTRAL)	97-02	F (AK5, 52I)	1	3544855
	11-B10	14.875	PLUG, P/SEAT BELT BOLT ACC HOLE (BKL SI) (GRAY)	97-99	F (AK5, 10I, 14I, 73I)	1	25638638
	11-B10	14.875	PLUG, P/SEAT BELT BOLT ACC HOLE (BKL SI) (PEWTER)	97-98	F (AK5, 92I)	1	25639434
	11-B10	14.875	PLUG, P/SEAT BELT BOLT ACC HOLE (BKL SI) (PEWTER)	00-02	F (AK5, 92I)	1	25639434
	11-B10	14.875	PLUG, P/SEAT BELT BOLT ACC HOLE (BKL SI) (EBONY)	00-02	F (AK5, 73I)	1	25689295
15.	11-B10	14.875	BOLT, D/SEAT BELT (BKL SI) (M12 X 1.75 X 31) (RD HD)	97-02	F (AK5)	1	20247398
	11-B10	14.875	BOLT, D/SEAT BELT (BKL SI) (1/2-13X1.7, 0.9 THD, 0.85 OD) (8.913)	97-02	F (AK5)	AR	9442917
	11-B10	14.875	BOLT, P/SEAT BELT (BKL SI) (M12 X 1.75 X 31) (RD HD)	97-02	F (AK5)	1	20247398
	11-B10	14.875	BOLT, P/SEAT BELT (BKL SI) (1/2-13X1.7, 0.9 THD, 0.85 OD) (8.913)	97-02	F (AK5)	AR	9442917
16.	11-N26	13.100	CONNECTOR, INLINE-TO ST BELT SW (BLACK) (2-WAY M W/LEADS) (2.535) (AC-DELCO #PT103)	97-02	F	2	12085481
17.	11-B10	14.875	BOLT, D/SEAT BELT (RETR SI) (M12 X 1.75 X 31) (RD HD)	97-02	F (AK5)	1	20247398
	11-B10	14.875	BOLT, D/SEAT BELT (RETR SI) (1/2-13X1.7, 0.9 THD, 0.85 OD) (8.913)	97-02	F (AK5)	AR	9442917

cardiagn.com

	11-B10	14.875	BOLT, P/SEAT BELT (RETR SI) (M12 X 1.75 X 31) (RD HD)	97-02	F (AK5)	1	20247398
	11-B10	14.875	BOLT, P/SEAT BELT (RETR SI) (1/2-13X1.7, 0.9 THD, 0.85 OD) (8.913)	97-02	F (AK5)	AR	9442917
18.	11-B10	14.875	PLUG, D/SEAT BELT BOLT ACC HOLE (RETR SI) (NEUTRAL)	97-02	F (AK5, 52I)	1	3544855
	11-B10	14.875	PLUG, D/SEAT BELT BOLT ACC HOLE (RETR SI) (GRAY)	97-99	F (AK5, 10I, 14I, 73I) ...	1	25638638
	11-B10	14.875	PLUG, D/SEAT BELT BOLT ACC HOLE (RETR SI) (PEWTER)	97	F (AK5, 92I)	1	25639434
	11-B10	14.875	PLUG, D/SEAT BELT BOLT ACC HOLE (RETR SI) (PEWTER)	00-02	F (AK5, 92I)	1	25639434
	11-B10	14.875	PLUG, D/SEAT BELT BOLT ACC HOLE (RETR SI) (EBONY)	00-02	F (AK5, 73I)	1	25669295
	11-B10	14.875	PLUG, P/SEAT BELT BOLT ACC HOLE (RETR SI) (NEUTRAL)	97-02	F (AK5, 52I)	1	3544855
	11-B10	14.875	PLUG, P/SEAT BELT BOLT ACC HOLE (RETR SI) (GRAY)	97-99	F (AK5, 10I, 14I, 73I) ...	1	25638638
	11-B10	14.875	PLUG, P/SEAT BELT BOLT ACC HOLE (RETR SI) (PEWTER)	97-98	F (AK5, 92I)	1	25639434
	11-B10	14.875	PLUG, P/SEAT BELT BOLT ACC HOLE (RETR SI) (PEWTER)	00-02	F (AK5, 92I)	1	25639434
	11-B10	14.875	PLUG, P/SEAT BELT BOLT ACC HOLE (RETR SI) (EBONY)	00-02	F (AK5, 73I)	1	25669295
19.		8.977	SCREW, OV HD C/R W/TR WA, M4.2X1.41X20, NZ (D/SEAT SHLDR BELT GDE)	97-02	.....	AR	11516665
		8.977	SCREW-OVAL, M4.2X1.41X35 TAP, 9.2 OD, C/R, 6172M, NZ (P/SEAT SHLDR BELT GDE)	97-02	.....	AR	11514957
20.	11-B10	14.875	GUIDE, D/SEAT SHLDR BELT (NEUTRAL)	97	F87 (AQ9, AR9, 52I) ...	1	16789715
	11-B10	14.875	GUIDE, D/SEAT SHLDR BELT (GRAY)	97	F87 (AG1, AR9, 14B, 73B)	1	16799273
	11-B10	14.875	GUIDE, D/SEAT SHLDR BELT (GRAY)	97	F87 (AG4, AH3, AR9, 14B, 73B) (EXC VE1) ..	1	16799273
	11-B10	14.875	GUIDE, D/SEAT SHLDR BELT (PEWTER)	97	F87 (AR9, 92B)	1	16799275
	11-B10	14.875	GUIDE, D/SEAT SHLDR BELT (GRAY)	97	FP87 (AG1, AR9, 10C, 103, 142)	1	16799273
	11-B10	14.875	GUIDE, D/SEAT SHLDR BELT (GRAY)	97	FP87 (AH3, AR9, 142) (EXC VE1)	1	16799273
	11-B10	14.875	GUIDE, D/SEAT SHLDR BELT H/RST (NEUTRAL)	98-02	F87 (AQ9, AR9, 52I) ...	1	16789715
	11-B10	14.875	GUIDE, D/SEAT SHLDR BELT H/RST (PEWTER)	00-02	F87 (AR9, 92B)	1	16799275
	11-B10	14.875	GUIDE, D/SEAT SHLDR BELT H/RST (EBONY)	00-02	F87 (AG1, AQ9, 194) ..	1	16817201
	11-B10	14.875	GUIDE, D/SEAT SHLDR BELT H/RST (EBONY)	00-02	F87 (AR9, 19B, 19D, 192)	1	16817201
	11-B10	14.875	GUIDE, D/SEAT SHLDR BELT H/RST (EBONY)	01-02	F87 (AG1, AQ9, 672) ..	1	16817201
	11-B10	14.875	GUIDE, P/SEAT SHLDR BELT (NEUTRAL)	97	F87 (AR9, 522, 52B) ...	1	16789714
	11-B10	14.875	GUIDE, P/SEAT SHLDR BELT (GRAY)	97-99	F87 (AR9, 14B, 73B) ...	1	16799272

cardiagn.com

	11-B10	14.875	GUIDE, P/SEAT SHLDR BELT (GRAY)	97	FP87 (AR9, 10C, 103, 142)	1	16799272
	11-B10	14.875	GUIDE, P/SEAT SHLDR BELT (NEUTRAL)	98-99	F87 (AR9, 52B, 52D)	1	16789714
	11-B10	14.875	GUIDE, P/SEAT SHLDR BELT (NEUTRAL)	98-02	F87 (AR9, 522)	1	16789714
	11-B10	14.875	GUIDE, P/SEAT SHLDR BELT (GRAY)	98-99	FP87 (AR9, 14D, 102, 142)	1	16799272
	11-B10	14.875	GUIDE, P/SEAT SHLDR BELT (NEUTRAL)	98-02	F87 (AQ9, AX4, 524) (EXPORT)	1	16789714
	11-B10	14.875	GUIDE, P/SEAT SHLDR BELT (GRAY)	98-99	FP87 (AQ9, AX4, 144) (EXPORT)	1	16799272
21.		N.S.	ESCUTCHEON, HDLNG TR FIN PNL F/SEAT BELT OPG (PART OF 1)				
22.	11-B10	14.875	BOLT, D/SEAT SHLDR BELT RETR (M8X1.25X20, 20 THD) (8.977)	97	F87 (AK5)	2	11516671
	11-B10	14.875	BOLT, D/SEAT SHLDR BELT RETR (M8X1.25X20, 20 THD) (8.977)	98-02	F87 (AK5) (EXC AX4)	2	11516671
	11-B10	14.875	BOLT, P/SEAT SHLDR BELT RETR (M8X1.25X20, 20 THD) (8.977)	97	F87 (AK5)	2	11516671
	11-B10	14.875	BOLT, P/SEAT SHLDR BELT RETR (M8X1.25X20, 20 THD) (8.977)	98-02	F87 (AK5) (EXC AX4)	2	11516671

RPO DEFINITIONS

AG1 – ADJUSTER,SEAT,6-WAY POWER,DRIVER(60-40)(VAR 2)
AG4 – ADJUSTER,MANUAL,2 WAY,VERT,DRIVER
AH3 – ADJUSTER,SEAT,4-WAY MANUAL,DRIVER
AK5 – RESTRAINT SYSTEM,FRONT SEAT,INFLATABLE,DRIVER AND PASSENGER
AQ9 – SEAT,FRONT BUCKET,DRIVER,PASSENGER,RECLINING
AR9 – SEAT,FRONT BUCKET,DRIVER,PASSENGER,MANUAL RECLINING(EUROPEAN STYLE)
AX4 – RESTRAINT SYSTEM,FRONT AND REAR SEAT,MANUAL(EUROPEAN)
VE1 – PROVISION OPTIONS,JAPAN(EXPORT)
Z49 – MANDATORY CANADIAN BASE EQUIPMENT MODIFICATIONS(CANADIAN)
10C – TRIM COMBINATION CLOTH, ARCTIC WHITE (97)
10I – INTERIOR TRIM – ARCTIC WHITE
102 – TRIM COMBINATION LEATHER, ARCTIC WHITE (2) (94)
103 – TRIM COMBINATION – LEATHER, ARCTIC WHITE
14B – TRIM COMBINATION – CLOTH, DK GRAY
14D – TRIM COMBINATION CLOTH, LT GRAY
14I – INTERIOR TRIM LT GRAY
142 – TRIM COMBINATION LEATHER, LT GRAY
144 – TRIM COMBINATION LEATHER, LT GRAY
19B – TRIM COMBINATION,CLOTH,BLACK
19D – TRIM COMBINATION,CLOTH,BLACK
19I – INTERIOR TRIM,BLACK
192 – TRIM COMBINATION,BLACK LEATHER
194 – TRIM COMBINATION,BLACK LEATHER
52B – TRIM COMBINATION CLOTH, LT NEUTRAL
52D – TRIM COMBINATION CLOTH, NEUTRAL
52I – INTERIOR TRIM LIGHT NEUTRAL
522 – TRIM COMBINATION – LEATHER, NEUTRAL
524 – TRIM COMBINATION LEATHER, NEUTRAL
672 – TRIM COMBINATION,LEATHER,OAK
73B – TRIM COMBINATION,CLOTH,FLAME RED

cardiagn.com

731 – INTERIOR TRIM,FLAME RED
92B – TRIM COMBINATION CLOTH, SHALE/PEWTER
92I – INTERIOR TRIM SHALE/PEWTER

cardiagn.com

ILLUSTRATION INDEX

	TITLE	GRID
1993–2002	F SEAT ASM/REAR	11–I4
1993–2002	F87 CARPET/FLOOR	11–I10
1994–2002	F67 CARPET/FLOOR	11–I15

cardiagn.com

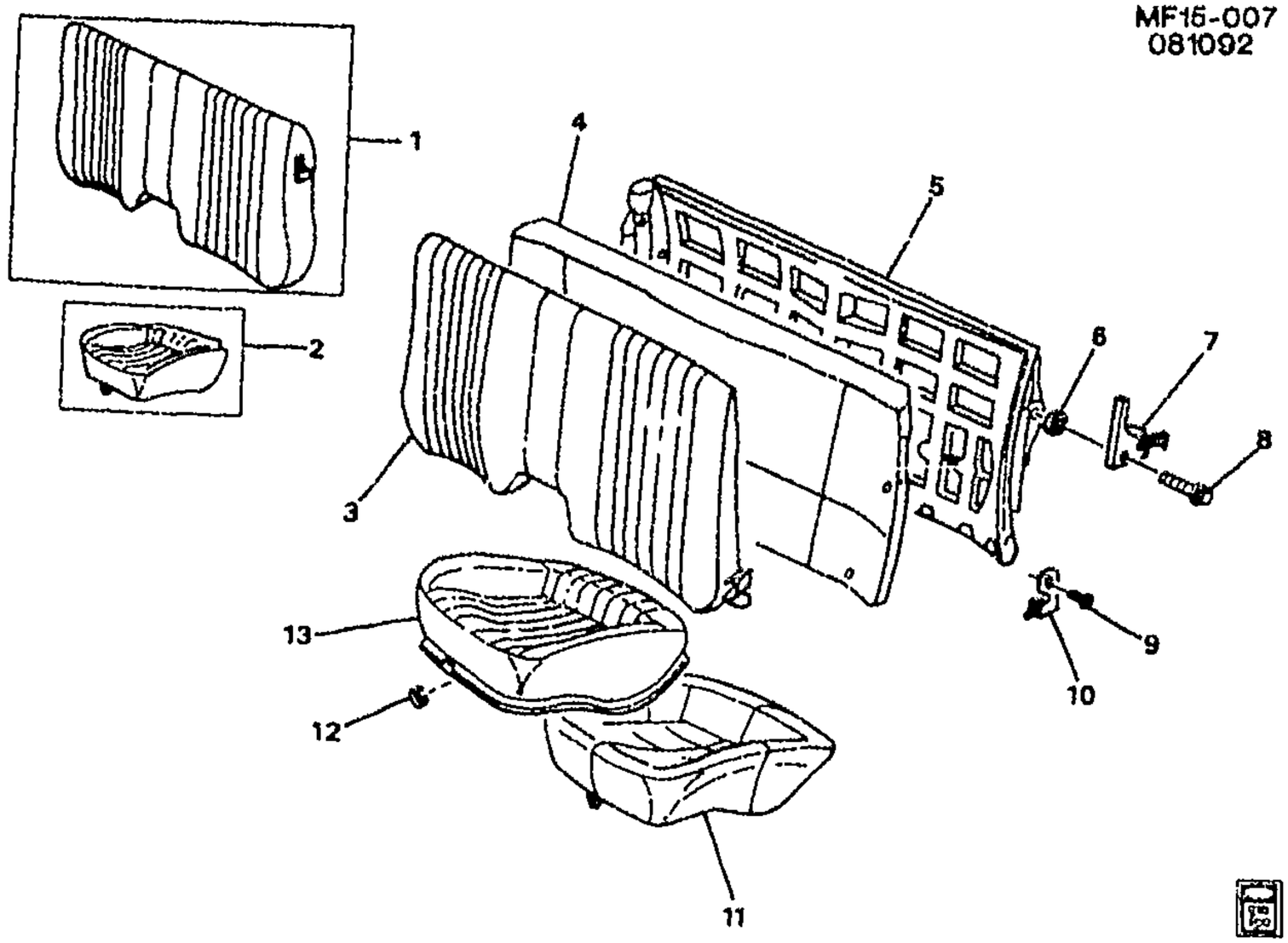

MF15-007

1993-2002 F SEAT ASM/REAR

NOTE: FOR INFORMATION ON SEAT MOUNTING SEE SEAT HARDWARE/REAR MOUNTING ILLUSTRATION IN GROUP 11.000.

1.		N.S.	CUSHION, R/SEAT BK		.....		
2.		N.S.	CUSHION, R/SEAT (SEE "CUSHION, REAR SEAT" IN GRP. 14.896 FOR ONE PCS.PAD AND COVER.)		.....	LH	
		N.S.	CUSHION, R/SEAT BK (SEE "CUSHION, REAR SEAT" IN GRP. 14.896 FOR ONE PCS.PAD AND COVER.)		.....		
		N.S.	CUSHION, R/SEAT (SEE "CUSHION, REAR SEAT" IN GRP. 14.896 FOR ONE PCS.PAD AND COVER.)		.....	RH	
3.	11-D7	15.035	COVER, R/SEAT CUSH (GRAPHITE)	93-94	F87 (12B, 14B)	2	16730234
		DISCON	COVER, R/SEAT CUSH (BEIGE) .	93-94	F87 (64B)	2	16730235
	11-D7	15.035	COVER, R/SEAT CUSH (GRAPHITE)	93	F87 (12C)	LH	16740063
		DISCON	COVER, R/SEAT CUSH (GRAPHITE)	93	F87 (12C)	RH	16740064
		DISCON	COVER, R/SEAT CUSH (GRAY) ..	94	F67 (12B, 14B)	2	16748289
		DISCON	COVER, R/SEAT CUSH (BEIGE) .	94	F67 (64B)	2	16748290
	11-D7	15.035	COVER, R/SEAT CUSH (RED) ...	94	F67 (73B)	2	16748718
	11-D7	15.035	COVER, R/SEAT CUSH (GRAPHITE)	94	F67 (122)	2	16778864
	11-D7	15.035	COVER, R/SEAT CUSH (BEIGE) .	94	F67 (642)	1	16778865

cardiagn.com

	DISCON	COVER, R/SEAT CUSH (RED) ...	94	F87 (73B)	2	16748719
11-D7	15.035	COVER, R/SEAT CUSH (GRAPHITE)	94	F87 (122)	2	16778861
11-D7	15.035	COVER, R/SEAT CUSH (BEIGE) .	94	F87 (642)	2	16778862
11-D7	15.035	COVER R/SEAT CUSH (GRAY) ..	95	F (12B, 14B)	2	16788077
	DISCON	COVER, R/SEAT CUSH (BEIGE) .	95	F (64B)	2	16788078
11-D7	15.035	COVER, R/SEAT CUSH (RED) ...	95	F (73B)	2	16788079
11-D7	15.035	COVER, R/SEAT CUSH (GRAPHITE)	95-96	F (122)	2	16788081
11-D7	15.035	COVER, R/SEAT CUSH (BEIGE) .	95	F (642)	2	16788082
	DISCON	COVER, R/SEAT CUSH (GRAY) ..	95	F67 (12B, 14B) (1ST DES)	2	16748289
	DISCON	COVER, R/SEAT CUSH (BEIGE) (CVR IS SEP FROM PAD & VELCROED DOWN, FOR PAD SEE 2ND DES 16739028)	95	F67 (64B) (1ST DES) ..	2	16748290
11-D7	15.035	COVER, R/SEAT CUSH (RED) (CVR IS SEP FROM PAD & VELCROED DOWN, FOR PAD SEE 2ND DES 16739028)	95	F67 (73B) (1ST DES) ..	2	16748718
11-D7	15.035	COVER, R/SEAT CUSH (GRAPHITE) (CVR IS SEP FROM PAD & VELCROED DOWN, FOR PAD SEE 2ND DES 16739028) ...	95	F67 (122) (1ST DES) ..	2	16778864
11-D7	15.035	COVER, R/SEAT CUSH (BEIGE) (CVR IS SEP FROM PAD & VELCROED DOWN, FOR PAD SEE 2ND DES 16739028)	95	F67 (642) (1ST DES) ..	2	16778865
11-D7	15.035	COVER, R/SEAT CUSH (GRAPHITE) (CVR IS SEP FROM PAD & VELCROED DOWN, FOR PAD SEE 2ND DES 16711251) ...	95	F87 (12B, 14B) (1ST DES)	2	16730234
	DISCON	COVER, R/SEAT CUSH (BEIGE) (CVR IS SEP FROM PAD & VELCROED DOWN, FOR PAD SEE 2ND DES 16711251)	95	F87 (64B) (1ST DES) ..	2	16730235
	DISCON	COVER, R/SEAT CUSH (RED) (CVR IS SEP FROM PAD & VELCROED DOWN, FOR PAD SEE 2ND DES 16739028)	95	F87 (73B) (1ST DES) ..	2	16748719
11-D7	15.035	COVER, R/SEAT CUSH (GRAPHITE) (CVR IS SEP FROM PAD & VELCROED DOWN, FOR PAD SEE 2ND DES 16711251) ...	95	F87 (122) (1ST DES) ..	2	16778861
11-D7	15.035	COVER, R/SEAT CUSH (BEIGE) (CVR IS SEP FROM PAD & VELVROED DOWN, FOR PAD SEE 2ND DES 16711251)	95	F87 (642) (2ND DES) ..	2	16778862
11-D7	15.035	COVER, R/SEAT CUSH (GRAPHITE)	96	F (12B)	2	16789192
	DISCON	COVER, R/SEAT CUSH (GRAY) ..	96	F (14B)	2	16789193
11-D7	15.035	COVER, R/SEAT CUSH (NEUTRAL)	96	F (52B)	2	16789194
11-D7	15.035	COVER, R/SEAT CUSH (RED) ...	96	F (73B)	2	16789195
11-D7	15.035	COVER, R/SEAT CUSH (NEUTRAL)	96	F (522)	2	16789211
11-D7	15.035	COVER, R/SEAT CUSH (PEWTER)	97	F (92B)	2	16795378

cardiagn.com

	11-D7	15.035	COVER, R/SEAT CUSH (GRAY) ..	97	F (14B)	2	16796819
	11-D7	15.035	COVER, R/SEAT CUSH (NEUTRAL)	97	F (52B)	2	16796920
	11-D7	15.035	COVER, R/SEAT CUSH (RED) ...	97	F (73B)	2	16796921
	11-D7	15.035	COVER, R/SEAT CUSH (WHITE) .	97	F (103)	2	16797972
	11-D7	15.035	COVER, R/SEAT CUSH (WHITE) .	97	F (10C)	2	16799233
	11-D7	15.035	COVER, R/SEAT CUSH (NEUTRAL)	97-02	F (522)	2	16840532
	11-D7	15.035	COVER, R/SEAT CUSH (GRAY) ..	97-99	F67 (142)	2	16796823
	11-D7	15.035	COVER, R/SEAT CUSH (GRAY) ..	97-99	F87 (142)	2	16796823
	11-D7	15.035	COVER, R/SEAT CUSH (GRAY) ..	98-99	F (14D)	2	16797209
	11-D7	15.035	COVER, R/SEAT CUSH (NEUTRAL)	98-99	F (52D)	2	16797210
	11-D7	15.035	COVER, R/SEAT CUSH (GRAY) ..	98-99	F (144)	2	16797214
	11-D7	15.035	COVER, R/SEAT CUSH (WHITE) .	98-99	F (102)	2	16797972
	11-D7	15.035	COVER, R/SEAT CUSH (GRAY) (15.000)	98-99	F (14B)	2	16806035
	11-D7	15.035	COVER, R/SEAT CUSH (NEUTRAL) (15.000)	98-99	F (52B)	2	16806036
	11-D7	15.035	COVER, R/SEAT CUSH (RED) (15.000)	98-99	F (73B)	2	16806037
	11-D7	15.035	COVER, R/SEAT CUSH (NEUTRAL)	99-02	F (524)	2	16840529
	11-D7	15.035	COVER, R/SEAT CUSH (EBONY)	00-02	F (19B)	2	16837692
	11-D7	15.035	COVER, R/SEAT CUSH (RED) ...	00-02	F (73B)	2	16837694
	11-D7	15.035	COVER, R/SEAT CUSH (PEWTER)	00-02	F (92B)	2	16837695
	11-D7	15.035	COVER, R/SEAT CUSH (EBONY)	00-02	F (19D)	2	16837711
	11-D7	15.035	COVER, R/SEAT CUSH (EBONY)	00-02	F (194)	2	16840528
	11-D7	15.035	COVER, R/SEAT CUSH (EBONY)	00-02	F (192)	2	16840531
	11-D7	15.035	COVER, R/SEAT CUSH (EBONY)	02	F67-87 (193)	2	88890189
4.	11-D7	15.002	PAD, R/SEAT BK CUSH (USE W/TRIM CODES ENDING IN B, C)	93	F	1	16711318
	11-D7	15.002	PAD, R/SEAT BK CUSH (USE W/TRIM CODES ENDING IN B, D, 2, 3, 4)	94-02	F	1	16711318
5.	11-N21	11.628	PANEL, R/SEAT BK CUSH	93-02	F	1	16718889
6.	11-N21	11.620	WASHER, R/SEAT BK CUSH LK (M8.2 X 25)	93-02	F	AR	20373747
7.	11-N21	11.620	LOCK, R/SEAT BK CUSH (INCLS 8)	93-02	F	RH	20424722
	11-N21	11.620	LOCK, R/SEAT BK CUSH (INCLS 8)	93-02	F	LH	20424723
8.	11-N21	11.620	BOLT, R/SEAT BK CUSH LK (PART OF 7) (M8X1.25X41) (SPL C/R DOUBLE SHLDR, W/ADHES)	93-02	F	2	20424724
9.	11-N21	11.620	BOLT, R/SEAT BK CUSH PNL	93-02	F	2	20448670
10.	11-N21	11.620	SUPPORT, R/SEAT BK CUSH PIV (ON RR ST BK CUSH)	93-02	F	RH	20333182
	11-N21	11.620	SUPPORT, R/SEAT BK CUSH PIV (ON RR ST BK CUSH)	93-02	F	LH	20333183
11.	11-D8	15.036	PAD, R/SEAT CUSH	93-94	F		16711251
	11-N21	11.610	PAD, R/SEAT CUSH (W/FRM) ...	97-02	F		16787949
12.		8.934	RING, HOG (ST CVR)	93-02	.....	AR	4876466
13.	11-D7	15.035	COVER, R/SEAT CUSH (GRAPHITE)	93	F87 (12B, 14B)	2	16730234

cardiagn.com

	DISCON	COVER, R/SEAT CUSH (BEIGE) .	93	F87 (64B)	2	16730235
11-D7	15.035	COVER, R/SEAT CUSH (GRAPHITE)	93	F87 (12C)	LH	16740063
	DISCON	COVER, R/SEAT CUSH (GRAPHITE)	93	F87 (12C)	RH	16740064
11-D7	15.035	COVER, R/SEAT CUSH (GRAPHITE)	94	F87 (12B, 14B)	2	16730234
	DISCON	COVER, R/SEAT CUSH (BEIGE) .	94	F87 (64B)	2	16730235
	DISCON	COVER, R/SEAT CUSH (GRAY) ..	94	F67 (12B, 14B)	2	16748289
	DISCON	COVER, R/SEAT CUSH (BEIGE) .	94	F67 (64B)	2	16748290
11-D7	15.035	COVER, R/SEAT CUSH (RED) ...	94	F67 (73B)	2	16748719
11-D7	15.035	COVER, R/SEAT CUSH (GRAPHITE)	94	F67 (122)	2	16778864
11-D7	15.035	COVER, R/SEAT CUSH (BEIGE) .	94	F67 (642)	1	16778865
	DISCON	COVER, R/SEAT CUSH (RED) ...	94	F87 (73B)	2	16748719
11-D7	15.035	COVER, R/SEAT CUSH (GRAPHITE)	94	F87 (122)	2	16778861
11-D7	15.035	COVER, R/SEAT CUSH (BEIGE) .	94	F87 (642)	2	16778862
11-D7	15.035	COVER, R/SEAT CUSH (GRAY) ..	95	F (12B, 14B)	2	16788077
	DISCON	COVER, R/SEAT CUSH (BEIGE) .	95	F (64B)	2	16788078
11-D7	15.035	COVER, R/SEAT CUSH (RED) ...	95	F (73B)	2	16788079
11-D7	15.035	COVER, R/SEAT CUSH (GRAPHITE)	95	F (122)	2	16788081
11-D7	15.035	COVER, R/SEAT CUSH (BEIGE) .	95	F (642)	2	16788082
	DISCON	COVER, R/SEAT CUSH (GRAY) ..	95	F67 (12B, 14B) (1ST DES)	2	16748289
	DISCON	COVER, R/SEAT CUSH (BEIGE) (CVR IS SEP FROM PAD & VELCROED DOWN, FOR PAD SEE 2ND DES 16739028)	95	F67 (64B) (1ST DES) ..	2	16748290
11-D7	15.035	COVER, R/SEAT CUSH (RED) (CVR IS SEP FROM PAD & VELCROED DOWN, FOR PAD SEE 2ND DES 16739028)	95	F67 (73B) (1ST DES) ..	2	16748718
11-D7	15.035	COVER, R/SEAT CUSH (GRAPHITE) (CVR IS SEP FROM PAD & VELCROED DOWN, FOR PAD SEE 2ND DES 16739028) ...	95	F67 (122) (1ST DES) ..	2	16778864
11-D7	15.035	COVER, R/SEAT CUSH (BEIGE) (CVR IS SEP FROM PAD & VELCROED DOWN, FOR PAD SEE 2ND DES 16739028)	95	F67 (642) (1ST DES) ..	2	16778865
11-D7	15.035	COVER, R/SEAT CUSH (GRAPHITE) (CVR IS SEP FROM PAD & VELCROED DOWN, FOR PAD SEE 2ND DES 16711251) ...	95	F87 (12B, 14B) (1ST DES)	2	16730234
	DISCON	COVER, R/SEAT CUSH (BEIGE) (CVR IS SEP FROM PAD & VELCROED DOWN, FOR PAD SEE 2ND DES 16711251)	95	F87 (64B) (1ST DES) ..	2	16730235
	DISCON	COVER, R/SEAT CUSH (RED) (CVR IS SEP FROM PAD & VELCROED DOWN, FOR PAD SEE 2ND DES 16739028)	95	F87 (73B) (1ST DES) ..	2	16748719
11-D7	15.035	COVER, R/SEAT CUSH (GRAPHITE) (CVR IS SEP FROM PAD & VELCROED DOWN, FOR PAD SEE 2ND DES 16711251) ...	95	F87 (122) (1ST DES) ..	2	16778861

cardiagn.com

11-D7	15.035	COVER, R/SEAT CUSH (BEIGE) (CVR IS SEP FROM PAD & VELVRCED DOWN, FOR PAD SEE 2ND DES 13711251)	95	F87 (642) (2ND DES) ..	2	16778862
11-D7	15.035	COVER, R/SEAT CUSH (GRAPHITE)	96	F (122)	2	16788081
11-D7	15.035	COVER, R/SEAT CUSH (GRAPHITE)	96	F (12B)	2	16789192
	DISCON	COVER, R/SEAT CUSH (GRAY) .	96	F (14B)	2	16789193
11-D7	15.035	COVER, R/SEAT CUSH (NEUTRAL)	96	F (52B)	2	16789194
11-D7	15.035	COVER, R/SEAT CUSH (RED) ...	96	F (73B)	2	16789195
11-D7	15.035	COVER, R/SEAT CUSH (NEUTRAL)	96	F (522)	2	16790211
11-D7	15.035	COVER, R/SEAT CUSH (PEWTER)	97	F (92B)	2	16795378
11-D7	15.035	COVER, R/SEAT CUSH (GRAY) ..	97	F (14B)	2	16796819
11-D7	15.035	COVER, R/SEAT CUSH (NEUTRAL)	97	F (52B)	2	16796820
11-D7	15.035	COVER, R/SEAT CUSH (RED) ...	97	F (73B)	2	16796821
11-D7	15.035	COVER, R/SEAT CUSH (WHITE) .	97	F (103)	2	16797972
11-D7	15.035	COVER, R/SEAT CUSH (WHITE) .	97	F (10C)	2	16799233
11-D7	15.035	COVER, R/SEAT CUSH (NEUTRAL)	97	F (522)	2	16840532
11-D7	15.035	COVER, R/SEAT CUSH (GRAY) ..	97	F67 (142)	2	16796823
11-D7	15.035	COVER, R/SEAT CUSH (GRAY) ..	97	F87 (142)	2	16796823
11-D7	15.035	COVER, R/SEAT CUSH (NEUTRAL)	98	F (522)	2	16840532
11-D7	15.035	COVER, R/SEAT CUSH (GRAY) ..	98	F67 (142)	2	16796823
11-D7	15.035	COVER, R/SEAT CUSH (GRAY) ..	98	F87 (142)	2	16796823
11-D7	15.035	COVER, R/SEAT CUSH (GRAY) ..	98	F (14D)	2	16797209
11-D7	15.035	COVER, R/SEAT CUSH (NEUTRAL)	98	F (52D)	2	16797210
11-D7	15.035	COVER, R/SEAT CUSH (GRAY) ..	98	F (144)	2	16797214
11-D7	15.035	COVER, R/SEAT CUSH (WHITE) .	98	F (102)	2	16797972
11-D7	15.035	COVER, R/SEAT CUSH (GRAY) (15.000)	98	F (14B)	2	16806035
11-D7	15.035	COVER, R/SEAT CUSH (NEUTRAL) (15.000)	98	F (52B)	2	16806035
11-D7	15.035	COVER, R/SEAT CUSH (RED) (15.000)	98	F (73B)	2	16806037
11-D7	15.035	COVER, R/SEAT CUSH (NEUTRAL)	99-02	F (522)	2	16840532
11-D7	15.035	COVER, R/SEAT CUSH (GRAY) ..	99	F67 (142)	2	16796823
11-D7	15.035	COVER, R/SEAT CUSH (GRAY) ..	99	F87 (142)	2	16796823
11-D7	15.035	COVER, R/SEAT CUSH (GRAY) ..	99	F (14D)	2	16797209
11-D7	15.035	COVER, R/SEAT CUSH (NEUTRAL)	99	F (52D)	2	16797210
11-D7	15.035	COVER, R/SEAT CUSH (GRAY) ..	99	F (144)	2	16797214
11-D7	15.035	COVER, R/SEAT CUSH (WHITE) .	99	F (102)	2	16797972
11-D7	15.035	COVER, R/SEAT CUSH (GRAY) (15.000)	99	F (14B)	2	16806035
11-D7	15.035	COVER, R/SEAT CUSH (NEUTRAL) (15.000)	99	F (52B)	2	16806036
11-D7	15.035	COVER, R/SEAT CUSH (RED) (15.000)	99	F (73B)	2	16806037

cardiagn.com

11-D7	15.035	COVER, R/SEAT CUSH (NEUTRAL)	99-02	F (524)	2	15840529
11-D7	15.035	COVER, R/SEAT CUSH (EBONY)	00-02	F (19B)	2	16837692
11-D7	15.035	COVER, R/SEAT CUSH (RED)	00-02	F (73B)	2	16037694
11-D7	15.035	COVER, R/SEAT CUSH (PEWTER)	00-02	F (92B)	2	16837695
11-D7	15.035	COVER, R/SEAT CUSH (EBONY)	00-02	F (19D)	2	16837711
11-D7	15.035	COVER, R/SEAT CUSH (EBONY)	00-02	F (194)	2	16840528
11-D7	15.035	COVER, R/SEAT CUSH (EBONY)	00-02	F (192)	2	16840531
11-D7	15.035	COVER, R/SEAT CUSH (EBONY)	02	F67-87 (193)	2	88890199

RPO DEFINITIONS

10C -- TRIM COMBINATION CLOTH, ARCTIC WHITE (97)
102 -- TRIM COMBINATION LEATHER, ARCTIC WHITE (2) (94)
103 -- TRIM COMBINATION-- LEATHER,ARCTIC WHITE
12B -- TRIM COMBINATION CLOTH, GRAPHITE (B) (92)
12C -- TRIM COMBINATION CLOTH, GRAPHITE (C) (92)
122 -- TRIM COMBINATION LEATHER,GRAPHITE
14B -- TRIM COMBINATION -- CLOTH, DK GRAY
14D -- TRIM COMBINATION CLOTH, LT GRAY
142 -- TRIM COMBINATION LEATHER, LT GRAY
144 -- TRIM COMBINATION LEATHER, LT GRAY
19B -- TRIM COMBINATION,CLOTH,BLACK
19D -- TRIM COMBINATION,CLOTH,BLACK
192 -- TRIM COMBINATION,BLACK LEATHER
193 -- TRIM COMBINATION,BLACK LEATHER
194 -- TRIM COMBINATION,BLACK LEATHER
52B -- TRIM COMBINATION CLOTH, LT NEUTRAL
52D -- TRIM COMBINATION CLOTH, NEUTRAL
522 -- TRIM COMBINATION -- LEATHER, NEUTRAL
524 -- TRIM COMBINATION LEATHER, NEUTRAL
64B -- TRIM COMBINATION CLOTH, LT BEIGE
642 -- TRIM COMBINATION LEATHER, LT BEIGE
73B -- TRIM COMBINATION,CLOTH,FLAME RED
92B -- TRIM COMBINATION CLOTH, SHALE/PEWTER

cardiagn.com

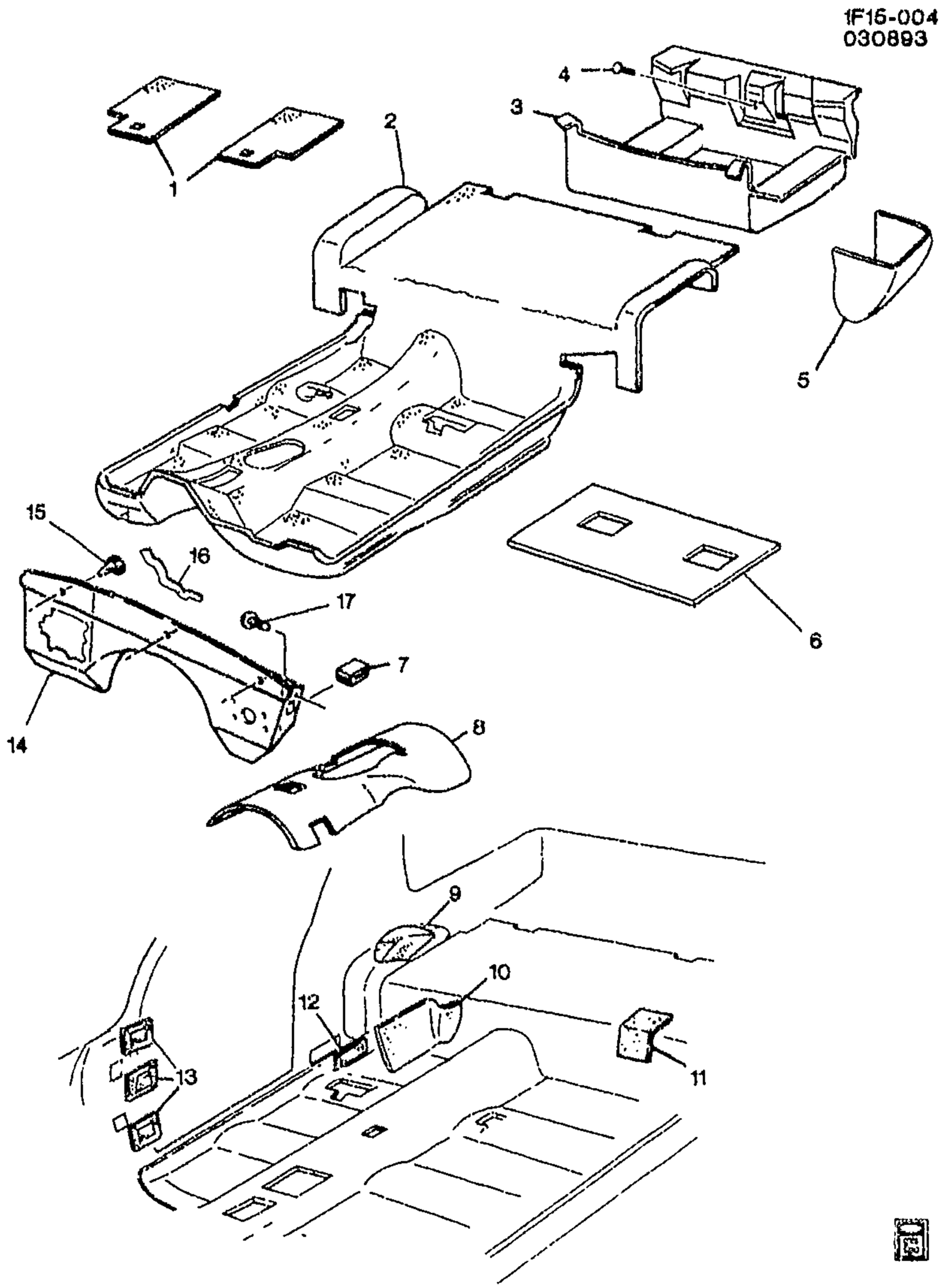

1F15-004

1993-2002 F87 CARPET/FLOOR

1.	11-N4	21.360 A	MAT PKG, F/FLR AUX (TWIN-CPT) (GRAPHITE) (15.286)	93 F (12I)	1	12343863

cardiagn.com

	11-N4	21.360 A	MAT PKG, F/FLR AUX (TWIN-CPT) (BEIGE) (GM LOGO) (15.286)	93-95	F87 (64I)	1	12343884
	11-N4	21.360 A	MAT PKG, F/FLR AUX (TWIN-CPT) (GRAY) (15.286)	93-96	F87 (14I)	1	12343885
	11-N4	21.360 A	MAT PKG, F/FLR AUX (TWIN-CPT) (GRAPHITE) (15.286)	94-96	F87 (12I, 73I)	1	12343883
	11-N4	21.360 A	MAT PKG, F/FLR AUX (TWIN-CPT) (NEUTRAL) (GM LOGO) (15.286)	96	F87 (52I)	1	12370402
	11-N4	21.360 A	MAT PKG, F/FLR AUX (TWIN-CPT) (GRAY) (GM LOGO) (15.286)	97	F87 (14I, 73I, 92I) (1ST DES)	1	12365764
	11-N4	21.360 A	MAT PKG, F/FLR AUX (TWIN-CPT) (GRAY) (15.286)	97	F87 (Z4C)	1	12365767
	11-N4	21.360 A	MAT PKG, F/FLR AUX (TWIN-CPT) (NEUTRAL) (GM LOGO) (15.286)	97	F87 (52I) (1ST DES)	1	12370402
	11-N4	21.360 A	MAT PKG, F/FLR AUX (TWIN-CPT) (NEUTRAL) (NO LOGO) (15.286)	97	F87 (52I) (2ND DES)	1	12371193
	11-N4	21.360 A	MAT PKG, F/FLR AUX (TWIN-CPT) (GRAY) (NO LOGO) (15.286)	97	F87 (14I, 73I, 92I) (EXC Z4C) (2ND DES)	1	12371194
	11-N4	21.360 A	MAT PKG, F/FLR AUX (TWIN-CPT) (NEUTRAL) (15.286)	98-02	F87 (52I)	1	12371394
	11-N4	21.360 A	MAT PKG, F/FLR AUX (TWIN-CPT) (GRAY) (15.286)	98	F87 (14I)	1	12371395
	11-N4	21.360 A	MAT PKG, F/FLR AUX (TWIN-CPT) (GRAY) (15.286)	99	F87 (10I, 14I, 73I)	1	12371395
	11-N4	21.360 A	MAT PKG, F/FLR AUX (TWIN-CPT) (BLACK) (15.286)	00-01	FP87 (19I, 73I)	1	12496163
	11-N4	21.360 A	MAT PKG, F/FLR AUX (TWIN-CPT) (PEWTER) (15.286)	00-02	FP87 (92I)	1	12496167
	11-N4	21.360 A	MAT PKG, F/FLR AUX (TWIN-CPT) (BLACK) (15.286)	02	FP87 (19I)	1	12496163
2.	11-D15	15.286	CARPET, FLR PNL (GRAPHITE)	93	F (12I)	1	10287165
	11-D15	15.286	CARPET, FLR PNL (BEIGE)	93-95	F87 (64I)	1	10281095
	11-D15	15.286	CARPET, FLR PNL (GRAY)	93-96	F87 (14I)	1	10287166
	11-D15	15.286	CARPET, FLR PNL (GRAPHITE)	94-96	F87 (12I, 73I)	1	10287165
	11-D15	15.286	CARPET, FLR PNL (NEUTRAL)	96-97	F87 (52I)	1	10290203
	11-D15	15.286	CARPET, FLR PNL (GRAY)	97	F87 (10I, 14I, 73I, 92I)	1	10290204
	11-D15	15.286	CARPET, FLR PNL (NEUTRAL)	98-99	F87 (52I)	1	10419081
	11-D15	15.286	CARPET, FLR PNL (GRAPHITE)	98-99	F87 (10I, 14I, 73I)	1	10419082
	11-D15	15.286	CARPET, FLR PNL (NEUTRAL)	00-02	F87 (52I)	1	10420490
	11-D15	15.286	CARPET, FLR PNL (EBONY)	00-01	F87 (19I, 73I)	1	10420491
	11-D15	15.286	CARPET, FLR PNL (PEWTER)	00-02	F87 (92I)	1	10420402
	11-D15	15.286	CARPET, FLR PNL (EBONY)	02	F87 (19I)	1	10420491
	11-D18	15.512	MATERIAL, BULK CARPET (GRAPHITE) (TRICIA)	97	F (12I)	AR	12515975
		DISCON	MATERIAL, BULK CARPET (GRAY) (WTIUDX9902 TROJAN)	97-99	F (14I)	1	12534363
		DISCON	MATERIAL, BULK CARPET (NEUTRAL) (WTIUDX195A TROJAN)	97-99	F (52I)	1	12534364

cardiagn.com

	DISCON	MATERIAL, BULK CARPET (GRAY) (WT1BFK9902 TOWER)	97	F (14I)	1	12534366
	DISCON	MATERIAL, BULK CARPET (NEUTRAL) (WT1BFK195A TOWER)	97	F (52I)	1	12534367
	DISCON	MATERIAL, BULK CARPET (GRAY) (WT3GCH9902 TRANSITION) (15.512)	96-99	F (14I)	1	12454874
	DISCON	MATERIAL, BULK CARPET (NEUTRAL) (WT3GCH195A TRANSITION) (15.512)	96-02	F (52I)	1	12454875
	DISCON	MATERIAL, BULK CARPET (GRAY) (TEMPEST) (15.512)	96	F (14I)	1	12454876
	DISCON	MATERIAL, BULK CARPET (NEUTRAL) (TEMPEST) (15.512)	96	F (52I)	1	12454877
	DISCON	MATERIAL, BULK CARPET (NEUTRAL) (WT1LHH195A TARA)	96-02	F (52I)	1	12529932
11-D18	15.512	MATERIAL, BULK CARPET (GRAY) (WT1LHH9902 TARA)	98-99	F (14I)	1	12534358
	DISCON	MATERIAL, BULK CARPET (NEUTRAL) (WT3LHB195A TEMPERANCE II)	00-02	F (52I)	1	12534365
	DISCON	MATERIAL, BULK CARPET (EBONY) (WT3LHB167A TEMPERANCE)	00	F (19I)	1	88894648
	DISCON	MATERIAL, BULK CARPET (PEWTER) (WT3LHB184D TEMPERANCE II)	00-02	F (92I)	1	88894649
	DISCON	MATERIAL, BULK CARPET (EBONY) (WT1LHH167A TARA)	00	F (19I)	1	88894650
	DISCON	MATERIAL, BULK CARPET (PEWTER) (WT1LHH184D TARA)	00-02	F (92I)	1	88894651
	DISCON	MATERIAL, BULK CARPET (EBONY) (WT3GCH167A TRANSITION)	00	F (19I)	1	88894652
	DISCON	MATERIAL, BULK CARPET (PEWTER) (WT3GCH184D TRANSITION)	00-02	F (92I)	1	88894653
	DISCON	MATERIAL, BULK CARPET (EBONY) (WT3LHB167A TEMPERANCE)	01-02	F (19I, 73I)	1	88894648
	DISCON	MATERIAL, BULK CARPET (EBONY) (WT1LHH167A TARA)	01-02	F (19I, 73I)	1	88894650
	DISCON	MATERIAL, BULK CARPET (EBONY) (WT3GCH167A TRANSITION)	01-02	F (19I, 73I)	1	88894652
	DISCON	MATERIAL, BULK CARPET (TARA-TANGO) (WT1LHH8801) (RED) (15.512)	94-96	F	AR	12501691
	DISCON	MATERIAL, BULK CARPET (TATUM) (WT3FFE7701) (GRAPHITE)	93-96	F	AR	12520735
	DISCON	MATERIAL, BULK CARPET (TATUM) (WT3FFE8801) (RED) (15.504)	94-96	F	1	12514379
	DISCON	MATERIAL, BULK CARPET (TATUM) (WT3FFE9777) (BEIGE) (15.500)	93-96	F	AR	12520759

cardiagn.com

		DISCON	MATERIAL, BULK CARPET (TATUM) (WT3FFE9779) (GRAY) (15.500)	93-96	F	AR	12520760
		DISCON	MATERIAL, BULK CARPET (TOWER (WT1BFK9777) (BEIGE)	93-96	F	AR	12516095
		DISCON	MATERIAL, BULK CARPET (TOWER) (WT1BFK7701) (GRAPHITE) (15.500)	93-96	F	AR	12520403
		DISCON	MATERIAL, BULK CARPET (TOWER) (WT1BFK8801) (RED) (15.504)	94-96	F	1	12514378
		DISCON	MATERIAL, BULK CARPET (TOWER) (WT1BFK9779) (GRAY)	93-96	F	AR	12516094
		DISCON	MATERIAL, BULK CARPET (WTLHH7701) (GRAPHITE) (TARA)	94-96	F (12I)	AR	20500601
		DISCON	MATERIAL, BULK CARPET (WT1LHH9777) (BEIGE) (TARA) (15.512)	94-96	F (64C)	AR	12510954
		DISCON	MATERIAL, BULK CARPET (WT1LHH9779) (GRAY) (TARA)	94-96	F (14I)	AR	12520681
3.	11-D15	15.222	TRIM, R/CMPT	93-98	F87	1	10282914
	11-D15	15.222	TRIM, R/CMPT	99-02	F87	1	10401915
4.		8.950	RETAINER, FITS .250 HOLE, 1.01LG.700-OD NYLON BLACK (R/CMPT TR)	93-02		1	10121502
5.	11-D15	15.222	TRIM, R/CMPT SI	93-96	F87 (UU8, U1T)	1	10205102
	11-D15	15.222	TRIM, R/CMPT SI	93-95	F87 (UQ0)	1	14099514
	11-D15	15.222	TRIM, R/CMPT SI	96-02	F87	1	14099514
6.		N.S.	INSULATOR, FLR				
7.		8.958	TAPE, DUAL LK FSTN (44.5MM X 44.5MM - 5 PER PKG) (DA PNL INSL FSTN) (2.483)	93-02		5	12520053
8.	11-N26	12.980	INSULATOR, FLR PNL FRT	93-02	F	1	10232074
9.		N.S.	INSULATOR, R/CMPT PNL RR S/ABS FIL				
10.		N.S.	BARRIER, RR W/H INR PNL LWR SND				
11.		N.S.	INSULATOR, FLR R/SEAT				
12.	11-N25	12.941	BARRIER, QTR INR PNL RR SND (4 1/4"X7 1/2") (TRIM AS REQ'D) (15.492)	93-02	F87	2	11515174
13.	11-N25	12.840	BARRIER, BODY H/PLR INR PNL SND (4 1/4"X7 1/2") (TRIM AS REQ'D) (15.492)	93-02	F	2	11515174
14.	11-N23	12.804	INSULATOR, DA PNL	93-02	F87	1	10298036
15.		8.950	RETAINER, PUSH-IN 0.35-LEN 0.25 HOLE DIA 2.0 HD DIA PLASTIC (DA PNL INSL) (8.021)	93-02		5	20064875
16.		N.S.	INSULATOR, HTR & A/C EVPR & BLO MDL				
17.		8.950	RETAINER, FITS .250 HOLE, 1.01LG.700-OD NYLON BLACK (DA PNL INSL)	93-02		1	10121502

RPO DEFINITIONS

UQ0 - SPEAKER SYSTEM,4,DUAL FRONT DOOR MOUNTED,DUAL STANDARD RANGE PACKAGE SHELF/QUARTER

UU8 - RADIO,AM/FM STEREO,CASSETTE,ETR,DELCO/BOSE,DOLBY,INCLUDES CLOCK

cardiagn.com

U1T – RADIO AM/FM STEREO, SEEK/SCAN, COMPACT DISC, HPS, CLOCK, ETR
Z4C – APPEARANCE PACKAGE 30TH ANNIVERSARY
10I – INTERIOR TRIM – ARCTIC WHITE
12I – INTERIOR TRIM GRAPHITE
14I – INTERIOR TRIM LT GRAY
19I – INTERIOR TRIM,BLACK
52I – INTERIOR TRIM LIGHT NEUTRAL
64C – TRIM COMBINATION CLOTH, LT BEIGE
64I – INTERIOR TRIM,LIGHT BEIGE
73I – INTERIOR TRIM,FLAME RED
92I – INTERIOR TRIM SHALE/PEWTER

cardiagn.com

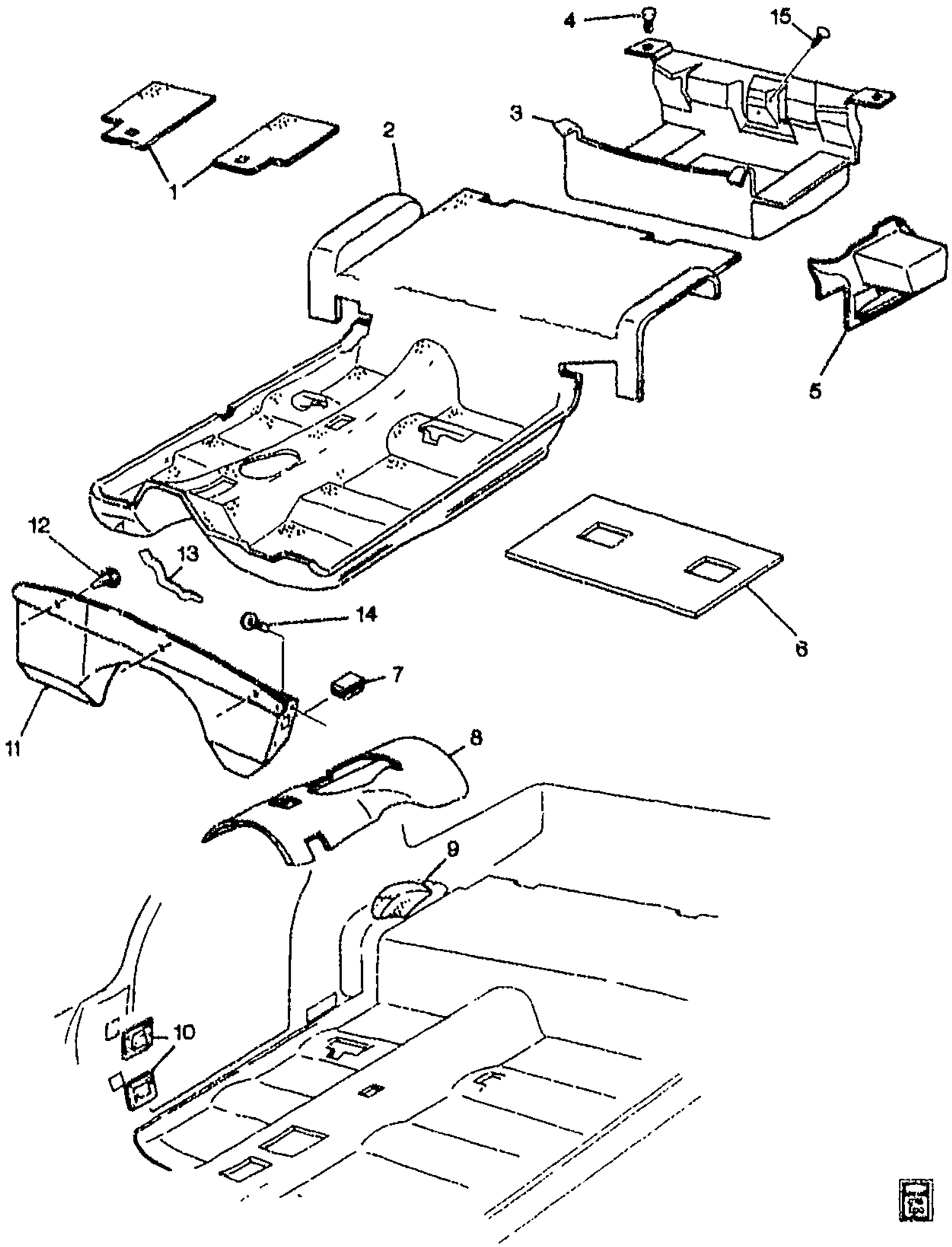

1F15-005

1994-2002 F67 CARPET/FLOOR

1.	11-N4	21.360 A	MAT PKG, F/FLR AUX (TWIN-CPT) (GRAPHITE) (15.286)	94-96	F67 (12I, 73I)	1 12344282
	11-N4	21.360 A	MAT PKG, F/FLR AUX (TWIN-CPT) (BEIGE) (15.286) ...	94-95	F67 (64I)	1 12344283

cardiagn.com

	11-N4	21.360 A	MAT PKG, F/FLR AUX (TWIN-CPT) (GRAY) (15.286) ...	94-96	F67 (14I)	1	12344284
	11-N4	21.360 A	MAT PKG, F/FLR AUX (TWIN-CPT) (NEUTRAL) (GM LOGO) (15.286)	96	F67 (52I)	1	12370403
	11-N4	21.360 A	MAT PKG, F/FLR AUX (TWIN-CPT) (GRAY) (GM LOGO) (15.286)	97	F67 (14I, 73I, 92I) (1ST DES)	1	12365766
	11-N4	21.360 A	MAT PKG, F/FLR AUX (TWIN-CPT) (GRAY) (15.286) ...	97	F67 (Z4C)	1	12365768
	11-N4	21.360 A	MAT PKG, F/FLR AUX (TWIN-CPT) (NEUTRAL) (GM LOGO) (15.286)	97	F67 (52I) (1ST DES) ...	1	12370403
	11-N4	21.360 A	MAT PKG, F/FLR AUX (TWIN-CPT) (NEUTRAL) (NO LOGO) (15.286)	97	F67 (52I) (2ND DES) ...	1	12371195
	11-N4	21.360 A	MAT PKG, F/FLR AUX (TWIN-CPT) (GRAY) (NO LOGO) (15.286)	97	F67 (14I, 73I, 92I) (EXC Z4C) (2ND DES)	1	12371196
	11-N4	21.360 A	MAT PKG, F/FLR AUX (TWIN-CPT) (NEUTRAL) (15.286)	98-02	F67 (52I)	1	12371396
	11-N4	21.360 A	MAT PKG, F/FLR AUX (TWIN-CPT) (GRAY) (15.286) ...	98	F67 (14I)	1	12371397
	11-N4	21.360 A	MAT PKG, F/FLR AUX (TWIN-CPT) (GRAY) (15.286) ...	99	F67 (10I, 14I, 73I)	1	12371397
	11-N4	21.360 A	MAT PKG, F/FLR AUX (TWIN-CPT) (BLACK) (15.286) ..	00-01	FP67 (19I, 73I)	1	12496164
	11-N4	21.360 A	MAT PKG, F/FLR AUX (TWIN-CPT) (PEWTER) (15.288)	00-02	FP67 (92I)	1	12496166
	11-N4	21.360 A	MAT PKG, F/FLR AUX (TWIN-CPT) (BLACK) (15.286) ..	02	FP67 (19I)	1	12496164
2.	11-D15	15.286	CARPET, FLR PNL (GRAPHITE) ..	94-96	F67 (12I, 73I)	1	10281089
	11-D15	15.286	CARPET, FLR PNL (GRAY)	94-96	F67 (14I)	1	10281090
		DISCON	CARPET, FLR PNL (BEIGE)	94-95	F67 (64I)	1	10281091
	11-D15	15.286	CARPET, FLR PNL (NEUTRAL) ..	96-97	F67 (52I)	1	10290206
	11-D15	15.286	CARPET, FLR PNL (GRAY)	97	F67 (10I, 14I, 73I, 92I) ..	1	10290207
	11-D15	15.286	CARPET, FLR PNL (NEUTRAL) ..	98-02	F67 (52I)	1	10298757
	11-D15	15.286	CARPET, FLR PNL (GRAPHITE) ..	98-99	F67 (10I, 14I, 73I)	1	10298758
	11-D15	15.286	CARPET, FLR PNL (EBONY)	00-01	F67 (19I, 73I)	1	10410768
	11-D15	15.286	CARPET, FLR PNL (PEWTER) ...	00-02	F67 (92I)	1	10417056
	11-D15	15.286	CARPET, FLR PNL (EBONY)	02	F67 (19I)	1	10410768
	11-D16	15.512	MATERIAL, BULK CARPET (GRAPHITE) (TRICIA)	97	F (12I)	AR	12515975
		DISCON	MATERIAL, BULK CARPET (GRAY) (WTIUDX9902 TROJAN) .	97-99	F (14I)	1	12534363
		DISCON	MATERIAL, BULK CARPET (NEUTRAL) (WTIUDX195A TROJAN)	97-99	F (52I)	1	12534364
		DISCON	MATERIAL, BULK CARPET (GRAY) (WT1BFK9902 TOWER) ..	97	F (14I)	1	12534366
		DISCON	MATERIAL, BULK CARPET (NEUTRAL) (WT1BFK195A TOWER)	97	F (52I)	1	12534367
		DISCON	MATERIAL, BULK CARPET (GRAY) (WT3GCH9902 TRANSITION)	98-99	F (14I)	1	12454874

cardiagn.com

	DISCON	**MATERIAL**, BULK CARPET (NEUTRAL) (WT3GCH195A TRANSITION)	98-02	F (52I)	1	12454875
	DISCON	**MATERIAL**, BULK CARPET (GRAY) (TEMPEST)	98	F (14I)	1	12454876
	DISCON	**MATERIAL**, BULK CARPET (NEUTRAL) (TEMPEST)	98	F (52I)	1	12454877
	DISCON	**MATERIAL**, BULK CARPET (NEUTRAL) (WT1LHH195A TARA)	98-02	F (52I)	1	12529932
11-D18	15.512	**MATERIAL**, BULK CARPET (GRAY) (WT1LHH9902 TARA)	98-99	F (14I)	1	12534358
	DISCON	**MATERIAL**, BULK CARPET (NEUTRAL) (WT3LHB195A TEMPERANCE II)	00-02	F (52I)	1	12534385
	DISCON	**MATERIAL**, BULK CARPET (EBONY) (WT3LHB167A TEMPERANCE)	00	F (19I)	1	88894648
	DISCON	**MATERIAL**, BULK CARPET (PEWTER) (WT3LHB184D TEMPERANCE II)	00-02	F (92I)	1	88894649
	DISCON	**MATERIAL**, BULK CARPET (EBONY) (WT1LHH167A TARA)	00	F (19I)	1	88894650
	DISCON	**MATERIAL**, BULK CARPET (PEWTER) (WT1LHH184D TARA)	00-02	F (92I)	1	88894651
	DISCON	**MATERIAL**, BULK CARPET (EBONY) (WT3GCH167A TRANSITION)	00	F (19I)	1	88894652
	DISCON	**MATERIAL**, BULK CARPET (PEWTER) (WT3GCH184D TRANSITION)	00-02	F (92I)	1	88894653
	DISCON	**MATERIAL**, BULK CARPET (EBONY) (WT3LHB167A TEMPERANCE)	01-02	F (19I, 73I)	1	88894648
	DISCON	**MATERIAL**, BULK CARPET (EBONY) (WT1LHH167A TARA)	01-02	F (19I, 73I)	1	88894650
	DISCON	**MATERIAL**, BULK CARPET (EBONY) (WT3GCH167A TRANSITION)	01-02	F (19I, 73I)	1	88894652
	DISCON	**MATERIAL**, BULK CARPET (TARA-TANGO) (WT1LHH8801) (RED)	94-96	F	AR	12501691
	DISCON	**MATERIAL**, BULK CARPET (TATUM) (WT3FFE7701) (GRAPHITE)	94-96	F	AR	12520735
	DISCON	**MATERIAL**, BULK CARPET (TATUM) (WT3FFE8801) (RED) (15.504)	94-96	F	1	12514379
	DISCON	**MATERIAL**, BULK CARPET (TATUM) (WT3FFE9777) (BEIGE) (15.500)	94-96	F	AR	12520759
	DISCON	**MATERIAL**, BULK CARPET (TATUM) (WT3FFE9779) (GRAY) (15.500)	94-96	F	AR	12520760
	DISCON	**MATERIAL**, BULK CARPET (TOWER (WT1BFK9777) (BEIGE)	94-96	F	AR	12516095
	DISCON	**MATERIAL**, BULK CARPET (TOWER) (WT1BFK7701) (GRAPHITE) (15.500)	94-96	F	AR	12520403

cardiagn.com

		DISCON	**MATERIAL**, BULK CARPET (TOWER) (WT1BFK8801) (RED) (15.504)	94-96	F	1	12514378
		DISCON	**MATERIAL**, BULK CARPET (TOWER) (WT1BFK9779) (GRAY)	94-96	F	AR	12516094
		DISCON	**MATERIAL**, BULK CARPET (WTLHH7701) (GRAPHITE) (TARA)	94-96	F (12I)	AR	20500601
		DISCON	**MATERIAL**, BULK CARPET (WT1LHH9777) (BEIGE) (TARA)	94-96	F (64C)	AR	12510954
		DISCON	**MATERIAL**, BULK CARPET (WT1LHH9779) (GRAY) (TARA)	94-96	F (14I)	AR	12520681
3.	11-D15	15.222	**TRIM**, R/CMPT	94-98	F67	1	10282915
	11-D15	15.222	**TRIM**, R/CMPT	99-02	F67	1	10420141
4.	11-D15	15.222	**RETAINER**, R/CMPT TR (16.575)	94-99	F	1	15584577
5.	11-D15	15.222	**PANEL**, R/CMPT SI TR	94-02	F67	LH	10278261
	11-D15	15.222	**PANEL**, R/CMPT SI TR (BLACK MIST)	95-02	F67	RH	10257982
		DISCON	**PANEL**, R/CMPT SI TR (W/EMBOSSED BOWTIE LOGO)	94	F67 (1ST DES)	RH	10240759
	11-D15	15.222	**PANEL**, R/CMPT SI TR (W/O EMBOSSED BOWTIE LOGO) (BLACK MIST)	94	F67 (2ND DES)	RH	10257982
6.		N.S.	**INSULATOR**, FLR				
7.		8.958	**TAPE**, DUAL LK FSTN (44.5MM X 44.5MM – 5 PER PKG) (DA PNL INSL FSTN) (2.483)	94-02		5	12520053
8.	11-N26	12.980	**INSULATOR**, FLR PNL FRT	94-02	F	1	10232074
9.		N.S.	**INSULATOR**, R/CMPT PNL RR S/ABS FIL				
10.		N.S.	**BARRIER**, BODY H/PLR INR PNL SND				
11.		N.S.	**INSULATOR**, DA PNL				
12.		8.950	**RETAINER**, PUSH-IN 0.35-LEN 0.25 HOLE DIA 2.0 HD DIA PLASTIC (DA PNL INSL) (8.021)	94-02	F	5	20064875
13.		N.S.	**INSULATOR**, HTR & A/C EVPR & BLO MDL				
14.		8.950	**RETAINER**, FITS .250 HOLE, 1.01LG.700-OD NYLON BLACK (DA PNL INSL)	94-02	F	1	10121502
15.		8.950	**RETAINER**, FITS .250 HOLE, 1.01LG.700-OD NYLON BLACK (R/CMPT TR)	94-02	F	1	10121502

RPO DEFINITIONS

Z4C – APPEARANCE PACKAGE 30TH ANNIVERSARY
10I – INTERIOR TRIM – ARCTIC WHITE
12I – INTERIOR TRIM GRAPHITE
14I – INTERIOR TRIM LT GRAY
19I – INTERIOR TRIM,BLACK
52I – INTERIOR TRIM LIGHT NEUTRAL
64C – TRIM COMBINATION CLOTH, LT BEIGE
64I – INTERIOR TRIM,LIGHT BEIGE
73I – INTERIOR TRIM,FLAME RED
92I – INTERIOR TRIM SHALE/PEWTER

cardiagn.com